APPROVED
JAN 20 2022
BOARD OF RECREATION
AND PARK COMMISSIONERS

BOARD REPORT **NO.** 22-011

DATE January 20, 2022 C.D. 5

BOARD OF RECREATION AND PARK COMMISSIONERS

SUBJECT: PAN PACIFIC PARK – HOLOCAUST MUSEUM LA APPROVAL OF PROJECT PLANS AND LEASE AMENDMENT – CATEGORICAL EXEMPTION FROM THE PROVISIONS OF THE CALIFORNIA ENVIRONMENTAL QUALITY ACT (CEQA) PURSUANT TO ARTICLE 19, SECTIONS 15332 [INFILL DEVELOPMENT], 15301(a) [EXTERIOR ALTERATIONS INVOLVING MINOR CONSTRUCTION WHERE THERE BE NEGLIGIBLE OR NO EXPANSION OF USE], 15311(l4) [DEMOLITION AND REMOVAL OF INDIVIDUAL SMALL ACCESSORY STRUCTURES], 15303(e) [NEW CONSTRUCTION OF ACCESSORY STRUCTURES] AND 15304(b) [NEW LANDSCAPING AND TREE PLANTING] OF CALIFORNIA CEQA GUIDELINES

AP Diaz		M. Rudnick	
H. Fujita		for C. Santo Domingo DF	
J. Kim		N. Williams	

M. Alexander
General Manager

Approved X Disapproved _____ Withdrawn _____

RECOMMENDATIONS

1. Grant final approval for the proposed expansion of the Holocaust Museum LA (HMLA), located on a portion of Pan Pacific Park as described in the Summary of this Report and in conformance with the attached project plans (Exhibit A) (Project);

2. Determine that the proposed Project is categorically exempt from the provisions of the California Environmental Quality Act (CEQA) pursuant to Article 19, Sections 15332 [Infill development], 15301(a) [Exterior alterations involving minor construction where there will be negligible or no expansion of use], 15311(l4) [Demolition and removal of individual small accessory structures], 15303(e) [New construction of accessory structures] and 15304(b) [New landscaping and tree planting] of California CEQA Guidelines and direct RAP Staff to file a Notice of Exemption (NOE) with the Los Angeles County Clerk;

3. Authorize RAP's Chief Accounting Employee or designee to prepare a check to the Los Angeles County Clerk in the amount of $75.00 for the purpose of filing a NOE; and,

4. Approve, subject to approval of the City Council and the City Attorney as to form, the Third Amendment to Lease Agreement with HMLA, substantially in the form on file in the Board Office and attached as Exhibit E to this Report, for the lease of an additional portion of Pan Pacific Park for the expansion and continued operation of the Holocaust Museum LA (Lease Amendment), subject to the City's acquisition of such additional portion of Pan Pacific Park from the State of California;

5. Direct the Board of Recreation and Park Commissioners' (Board) Secretary, in accordance with Executive Directive No.3, to forward the proposed Lease Amendment to the Mayor and, concurrently, to the City Attorney for review and approval as to form; and,

6. Upon receipt of the necessary approvals by City Council and the City Attorney, authorize the Board President and Secretary to execute the Lease Amendment.

SUMMARY

On May 16, 2007, the Board, through Report No. 07-111, approved the relocation of HMLA to a portion of Pan Pacific Park (Exhibit B). This approval also included a 50-year Lease Agreement for the use of a portion of Pan Pacific Park for the construction, operation and maintenance of the museum building, at HMLA's sole cost. Construction was completed in October 2010.

HMLA, which was founded in 1961, is the oldest survivor founded Holocaust Museum in the nation. Its mission is to commemorate those who perished in the Holocaust, honor those who survived, and house precious artifacts that weathered the Holocaust. It provides free education to students and visitors about the Holocaust.

The museum building, when opened in 2010, was designed to accommodate 15,000 visitors annually. In 2018, the museum went on to welcome over 63,000 visitors. In order to accommodate this increasing number, HMLA proposed to construct an additional structure and modify its existing structure, conceptually approved in Report No. 19-254 (Exhibit C). The project plans detailing the final proposed design of the museum are presented herein for final approval (Exhibit A).

HMLA has or will raise all funds necessary for the construction and operation of the Museum.

HMLA Expansion

The final museum design is in substantial conformance with the project originally described in Report No. 19-254. The additional structure will house a new pavilion adjacent to the existing museum building. It will accommodate more visitors, temporary exhibits, and special events. The showcase of the proposed expansion will be a permanent installation of the University of Southern California's (USC) Shoah Foundation's "Dimensions in Testimony" project, which captures survivor testimony and uses Artificial Intelligence (AI) and Virtual Reality (VR) to allow visitors to engage in real-time dialogue with those who witnessed the genocide firsthand. The new pavilion will measure approximately 14,750 square feet and consist of a 200-seat lecture hall with a state of the art A/V system for visiting lecturers, survivors, movies, etc.; a 24-seat witness testimony full

immersion experience (in association with the Shoah Foundation); 3 classrooms for a children's learning center; a temporary exhibit hall for travelling exhibits; a small grab-and-go for beverages and snacks; administration offices and dedicated bathrooms.

The modification to the existing museum structure will measure approximately 9,900 square feet. It will be used to house a rare and authentic, full-scale German transport box-car and alleviate visitor entry lines and provide highly needed secured queuing and improved circulation to both buildings.

Due to the expanded footprint of the museum, the HMLA Expansion will require the relocation of an existing RAP maintenance yard and the retention basin's control house structure, which is owned and operated by the Los Angeles County Flood Control District (LACFCD). Also, it will require additional portions of Pan Pacific Park to be added to the Lease Agreement as part of the leased premises per the Amendment (Attachment A of Exhibit E). The inclusion of the additional portions of the park into the Lease Agreement requires as a precondition the transfer of title of 26.94 acres of land at Pan Pacific Park from the State of California to RAP. The Board recently approved the acquisition of that property from the State (Report No. 21-211) and that transfer is currently in process.

Finally, RAP will need to issue a Grant of Right to the Department of Water Power (LADWP) in order to ensure that LADWP vehicles are able to access the museum site to install and maintain the museum's electrical equipment. Based on initial discussion with LADWP staff it is anticipated that the required Grant of Right will need to be 12ft wide and will be located in the existing parking lot on the north side of Pan Pacific Park (Exhibit D). That Grant of Right, once finalized with LADWP staff, will be presented to the Board for review and approval at a future Board meeting.

Public Engagement

On October 23, 2019, this proposed expansion was presented to RAP's Facility Repair and Maintenance Commission Task Force (Task Force). The Task Force recommended that this proposal be forwarded to the full Board for consideration. The project was, as previously noted, conceptually approved by the Board on December 18, 2019.

Additionally, HMLA presented the proposed expansion to the Pan Pacific Park Advisory Board (PAB) on August 21, 2019, and August 25, 2021. The PAB has indicated their support for the project.

HMLA Lease Amendment

After significant discussion and negotiations, HMLA and RAP staff have come to an agreement on the terms and conditions of the proposed Lease Amendment (Exhibit E). Several of the major amendment provisions are as follows:

- Parties – The amendment will provide for the Museum's name change from The Los Angeles Museum of the Holocaust, to HMLA, and update the address;

- Leased Premises – Additional land has been added to the definition of "Premises" in order to accommodate the expansion project.
- Meeting Hall - The meeting hall which shall be constructed on the Premises shall be accessed through the public entry and will be available for use by RAP during non-peak hours for such activities as, but not limited to, a gathering place for group lectures and seminars and for use as a community meeting room;
- Entry/Foyer - The entry/foyer area which shall be constructed on the Premises shall be accessed through the public entry and will be available for use by RAP after normal hours of operation for such activities as, but not limited to, a gathering place for group meetings, lectures and seminars and for use as a community meeting area;
- Gift Shop - HMLA may include a gift shop within the facility subject to the prior approval of the General Manager;
- Grab and Go/Marketplace - Subject to the prior approval of the General Manager, HMLA may include a grab and go/marketplace for the purpose of selling food and beverages including but not limited to prepared foods, prepackaged foods, snacks, and beverages as well as allow for preparation and staging for catering for special events;
- Admission Fees - HMLA will charge non-Californian adults a $15.00 admission fee and non-Californian seniors a $10.00 admission fee. HMLA will have the right to reasonably adjust the stated fees at any time in the future, should it be deemed necessary by the Board of Trustees of HMLA, subject to the written approval of the General Manager;
- Maintenance Yard - HMLA shall relocate the existing RAP Maintenance Yard located on Grove Drive (New Maintenance Yard). HMLA will fund, design, and construct the New Maintenance Yard to RAP standards. The New Maintenance Yard will be located within Pan Pacific Park, but not on the proposed leased Premises, and its location and design shall be approved by RAP prior to its construction. RAP will be responsible for the maintenance and operation of the New Maintenance Yard.
- Grove Drive Restroom Building - HMLA shall, at its sole cost and expense, perform a onetime rehabilitation to the existing Restroom Building located within Pan Pacific Park, along Grove Drive, to RAP standards. The existing Restroom Building is located just south of the HMLA expansion site and is not on the proposed leased Premises. RAP will continue to be responsible for the maintenance and operation of the Restroom Building.

County of Los Angeles, Department of Public Works - Pan Pacific Retention Basin Easements

In 1978, the State, the County of Los Angeles (County), and the City entered into an acquisition agreement to acquire the Pan Pacific Park property for the purposes of developing a new park and flood control (Exhibit F). In 1980, the State granted LACFCD easements for covered storm drains, inundation purposes and for retention basin, control facilities, and appurtenant structures in, on, over, and across Pan Pacific Park (Exhibit G).

As a result of these easements on the property, the proposed HMLA expansion project requires additional prior approval by LACFCD. An Overbuild Agreement has been issued by LACFCD to HMLA demonstrating such (Exhibit H), and is attached to this report.

Additionally, as previously noted, The HMLA expansion project requires the demolition of the current LACFCD Control House on Grove Drive, as it is planned to be built above the existing spillway and on portions of the storm drain structures. As part of the concurrent Pan Pacific Retention Basin Diversion Gate and Control House Upgrade Project, County Department of Public Works plans to replace the existing slide gate, upgrade mechanical, electrical and control systems, and construct a new Control House in Pan Pacific Park (Exhibit I). The new control house will be located along Grove Drive and south of the HMLA Expansion and within the retention basin easement area. The new location of the Control House has been reviewed by RAP staff and it was determined that the proposed new location should have no impact on any recreational amenities in the park nor impact any existing park uses.

TREES AND SHADE:

The proposed HMLA Expansion will result in the removal and replacement of 22 trees, and the relocation of 5 trees. HMLA has developed an Existing Tree Inventory report detailing the size and location of the trees that are impacted (Exhibit J). As discussed in that report, the Cumulative Diameter at Breast Height (DBH) of all removed tree calipers totals 362.2”. To replace the proposed trees in conformance with RAP tree replacement standards, HMLA is proposing to plant 19 trees, with an estimated cumulative DBH of 81.0”, on the museum site or immediately adjacent to it. Additionally, HMLA will provide and plant additional new trees, totaling 281.2” DBH, in order to compensate for the removal of the 22 trees. RAP Staff will coordinate with HMLA on the planting of the 281.2” DBH at Pan Pacific Park, or off site. The final number and sizes of those new trees is yet to be determined by RAP Forestry staff.

Additionally, the County’s Pan Pacific Retention Basin Diversion Gate and Control House Upgrade Project will require the removal of 4 trees: 1 Italian Stony Pine tree and 3 Silk Floss trees. In conformance with RAP tree replacement standards, the County will plant 25 new, 36" box, trees in Pan Pacific Park. The final locations and species will be determined by RAP Forestry staff.

ENVIRONMENTAL IMPACT:

The proposed Project is an infill development project that also includes exterior alterations involving minor construction where there be negligible or no expansion of use, demolition and removal of individual small accessory structures, new construction of accessory structures and new landscaping and tree planting.

The proposed Project is consistent with the applicable general plan designation and all applicable general plan policies as well as with applicable zoning designation and regulation; it occurs within city limits on a project site of no more than five acres substantially surrounded by urban uses; the proposed Project site has no value as habitat for endangered, rare, or threatened species; its approval would not result in any significant effects relating to traffic, noise, air quality, or water quality; and the site can be adequately served by all required utilities and public services.

This site is within a methane zone, and the proposed Project includes measures to monitor and dissipate methane seepage. Also, the proposed Project site is not in a coastal area. Furthermore, environmental due diligence in the form of a Phase I Environmental Site Assessments (ESAs) was performed for the property including the proposed Project in accordance with the American Society for Testing and Materials (ASTM) Standard Practice for Environmental Site Assessment: Phase I Environmental Site Assessments (Standard Designation E 1527-05), the United States Environmental Protection Agency (US EPA) 40 CFR Part 312 Standards and Practices for All Appropriate Inquiries (AAI). The Phase I ESA found that recognized environmental conditions (REC) are not present on the proposed Project site. As such, the proposed Project does not impact on a recognized environmental resource of hazardous or critical concern, so there is no reasonable possibility that it will have a significant effect due to its location or unusual circumstances. At this time, no other known projects would involve cumulatively significant impacts, and no future projects would result from the proposed Project. As of January 4, 2021, the State Department of Toxic Substances Control (DTSC) (Envirostor at www.envirostor.dtsc.ca.gov) has not listed the Project site or any contaminated sites near the Project area (within 500 feet). According to the Caltrans Scenic Highway Map there is no scenic highway located within the vicinity of the proposed Project or within the project site. Furthermore, the proposed Project is located in the vicinity of the City of Los Angeles Historic Cultural Monument # 183 (West Façade of Pan Pacific Auditorium), however, the auditorium was destroyed by fire in 1992 and does no longer exists. Therefore, the construction of an expansion of the Holocaust Museum and related actions will not cause a substantial adverse change in the significance of a historical resource.

Based on these findings, staff recommends that the Board determines that the proposed Project is categorically exempt from the provisions of the California Environmental Quality Act, pursuant to the Article 19, Sections 15332, 15301(a); 15301(l4), 15303(e) and 15304(b) of State CEQA Guidelines. Staff will file a Notice of Exemption upon Board's approval.

FISCAL IMPACT:

Final approval of the proposed expansion will have no impact to RAP's General Fund. All costs associated with the proposed expansion are the responsibility of HMLA.

STRATEGIC PLAN INITIATIVES AND GOALS:

Approval of this Board Report advances RAP's Strategic Plan by supporting:

Goal No. 1:	Provide Safe and Accessible Parks
Outcome No. 2:	Every Angeleno has walkable access to a park in their neighborhood.
Key Metric:	Percentage of Angelenos with park access within ½ mile from their home.
Target:	**60% by 2022**

Result: Pan Pacific Park will be able to continue serving 15,243 residents.

This Report was prepared by Bryan Miller, Management Analyst, Planning Maintenance and Construction Branch.

ATTACHMENTS

Exhibit A – Project Plans
Exhibit B – Board Report 07-111
Exhibit C – Board Report 19-254
Exhibit D – LADWP Grant of Right Site Plan
Exhibit E – HMLA Lease Amendment 3
    Attachment A – Legal Description
    Attachment B – Project Plans
    Attachment C – Restroom Building Rehabilitation Scope of Work
Exhibit F – Acquisition Agreement
Exhibit G – Easement Deed
Exhibit H – Overbuild Agreement
Exhibit I – LACDPW Approval
Exhibit J – HMLA Existing Tree Inventory

HOLOCAUST MUSEUM LA EXPANSION

100 THE GROVE DRIVE
LOS ANGELES, CA 90036

BELZBERG ARCHITECTS LLP

100% DESIGN SUBMITTAL

17.NOV.2021

ABBREVIATIONS

ACT	ACOUSTICAL CEILING TILE
AFF	ABOVE FINISH FLOOR
ALQ	ACCESSORY LIVING QUARTERS
ALT	ALTERNATE
AD	AREA DRAIN
BLDG	BUILDING
BOT	BOTTOM
CIP	CAST IN PLACE
CL	CENTER LINE
CLG	CEILING
CLR	CLEAR
COL	COLUMN
CONC	CONCRETE
CONT	CONTINUOUS
CPT	CARPET
CT	CERAMIC TILE
CMU	CONCRETE MASONRY UNIT
DIA	DIAMETER
DIM	DIMENSION
DN	DOWN
DS	DOWN SPOUT
DTL	DETAIL
DWG	DRAWING
E	EAST
(E)	EXISTING
EA	EACH
EL	ELEVATION
ELEC	ELECTRIC(AL)
ELEV	ELEVATOR
EQ	EQUAL
EXP	EXPOSED
FD	FLOOR DRAIN
FG	FINISH GRADE
FL	FLOOR
FOF	FACE OF FINISH
FT	FOOT
GA	GAUGE
GLZ	GLAZING
GWB	GYPSUM WALL BOARD
HB	HOSE BIBB
HC	HOLLOW CORE
HDWR	HARDWARE
HM	HOLLOW METAL
HOR	HORIZONTAL
HR	HOUR
HT	HEIGHT
HVAC	HEATING, VENTILATION AND AIR CONDITIONING
ID	INSIDE DIAMETER
INS	INSULATION
MAT	MATERIAL
MAX	MAXIMUM
MFR	MANUFACTURER
MIN	MINIMUM
MISC	MISCELLANEOUS
MTL	METAL
(N)	NEW
N	NORTH
NIC	NOT IN CONTRACT
No	NUMBER
NTS	NOT TO SCALE
OC	ON CENTER
OD	OUTSIDE DIAMETER
R	RADIUS/RISER
REF	REFERENCE
REQ	REQUIRED
REV	REVISION
ROW	RIGHT OF WAY
S	SOUTH
SC	SOLID CORE
SIM	SIMILAR
SFD	SINGLE FAMILY DWELLING
SPEC	SPECIFICATIONS
STD	SLOPE TO DRAIN
STRUCT	STRUCTURAL
SF	SQUARE FEET
ST	STONE TILE
STC	STUCCO
STL	STEEL
STN	STONE
T	TREAD
TOB	TOP OF BEAM
TOC	TOP OF CONCRETE
TOF	TOP OF FLOOR
TOS	TOP OF SLAB
TOW	TOP OF WALL
TRZ	TERAZZO
TYP	TYPICAL
UNO	UNLESS NOTED OTHERWISE
VERT	VERTICAL
W	WEST
WD	WOOD
WP	WATERPROOF(ING)

SYMBOL LEGEND

NORTH ARROW

FINISH TAG

ROOM TAG — ROOM NAME, ROOM NUMBER, SQUARE FOOTAGE

INTERIOR ELEVATION KEY — ELEVATION DRAWN, DRAWING NUMBER, SHEET REFERENCE

BUILDING SECTION — DIRECTION OF VIEW, DRAWING NUMBER, SHEET REFERENCE

EXTERIOR ELEVATION KEY — DRAWING NUMBER, SHEET REFERENCE

REVISION TAG

ENLARGED PLAN / DETAIL — DRAWING NUMBER, SHEET REFERENCE

DETAIL KEY — DRAWING NUMBER, SHEET REFERENCE

DETAIL KEY — LEVEL NAME, HEIGHT

GRID BUBBLE

WINDOW TAG

DOOR TAG

DIMENSIONS

VIEW NAME — SCALE, DRAWING NUMBER

VICINITY MAP

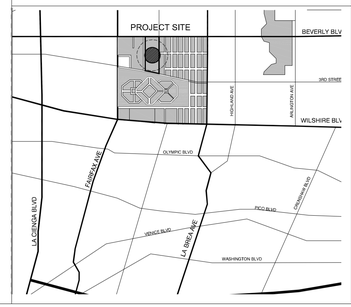

PROJECT DIRECTORY

OWNER: **HOLOCAUST MUSEUM LOS ANGELES**
100 S. THE GROVE DRIVE
LOS ANGELES, CA 90046
CONTACT: BETH KEAN, LISA BARNET
T: 310.453.9611 F:310.453.9166

ARCHITECT: **BELZBERG ARCHITECTS, LLP**
1729 21ST STREET
SANTA MONICA, CA 90404
CONTACT: HAGY BELZBERG
T: 310.453.9611 F:310.453.9166

SMEP ENGINEER: **ARUP**
900 WILSHIRE BLVD, 19TH FLOOR
LOS ANGELES, CA 90017
CONTACT: BRUCE MCKINLEY
T: 310.578.4402

CIVIL ENGINEER: **PSOMAS**
555 FLOWER STREET #4300
LOS ANGELES, CA 90071
CONTACT: DAVID CURTIS
T: 213.223.1524

LANDSCAPE ARCHITECT: **STUDIO-MLA**
251 SOUTH MISSION ROAD
LOS ANGELES, CA 90033
CONTACT: MIA LEHRER
T: 310.828.6373

GEOTECHINCAL ENGINEER: **GROUP DELTA**
370 AMAPOLA AVENUE #212
TORRANCE, CA 90501
CONTACT: MICHAEL READER
T: 310.320.5100

GENERAL CONTRACTOR: **MATT CONSTRUCTION**
261 SOUTH FIGUEROA STREET SUITE 120
LOS ANGELES, CA 90012
CONTACT: SAM RAGSDALE
T: 562.236.2550

APPLICABLE CODES

2020 CITY OF LOS ANGELES BUILDING CODE
-INCL. ALL APPLICABLE AMENDMENTS
2019 CITY OF LOS ANGELES ELECTRICAL CODE
-INCL. ALL APPLICABLE AMENDMENTS
2019 CITY OF LOS ANGELES MECHANICAL CODE
-INCL. ALL APPLICABLE AMENDMENTS
2019 CITY OF LOS ANGELES PLUMBING CODE
-INCL. ALL APPLICABLE AMENDMENTS
2019 CITY OF LOS ANGELES FIRE CODE
-INCL. ALL APPLICABLE AMENDMENTS
2020 CITY OF LOS ANGELES GREEN BUILDING CODE
-INCL. ALL APPLICABLE AMENDMENTS
2019 CALIFORNIA ELECTRICAL CODE
-INCL. ALL APPLICABLE AMENDMENTS
2019 CALIFORNIA MECHANICAL CODE
-INCL. ALL APPLICABLE AMENDMENTS
2019 CALIFORNIA PLUMBING CODE
-INCL. ALL APPLICABLE AMENDMENTS
2019 CALIFORNIA ENERGY CODE
-INCL. ALL APPLICABLE AMENDMENTS
2019 CALIFORNIA GREEN BUILDING STANDARDS CODE
-INCL. ALL APPLICABLE AMENDMENTS
2018 INTERNATIONAL FIRE CODE
-INCL. ALL APPLICABLE AMENDMENTS
LOS ANGELES MUNICIPAL CODE
-2000 EDITION PLANNING / ZONING CODE
-INCL. ALL APPLICABLE AMENDMENTS

LOT LEGAL DESCRIPTION

PROPERTY ADDRESS
100 S. THE GROVE DRIVE
LOS ANGELES, CA 90046

ADDRESS / LEGAL DESCRIPTION

PIN NO.	138B177 452/1158
LOT/PARCEL AREA (CALC.)	55,427.6 SF
THOMAS BROS. GRID	PAGE 633 - GRID C1
ASSESSOR'S PARCEL NO.	5512004905 / 5512004909
TRACT	RANCHO LA BREA
MAP REFERENCE	PAT 1-289/290
BLOCK	NONE
LOT	NONE
ARB (LOT CUT REFERENCE)	25 / 33
MAP SHEET	138B177

JURISDICTIONAL INFORMATION

COMMUNITY PLANNING AREA	WILSHIRE
AREA PLANNING COMMISSION	CENTRAL
NEIGHBORHOOD COUNCIL	MID CITY WEST
COUNCIL DISTRICT	CD 4 - NITHYA RAMAN
CENSUS TRACT #	2145.01
LADBS DISTRICT OFFICE	LOS ANGELES METRO

PLANNING AND ZONING INFORMATION

ZONE	OS-1XL-O
GENERAL PLAN LAND USE	OPEN SPACE
GENERAL PLAN FOOTNOTE(S)	YES

REVISION SCHEDULE

#	DESCRIPTION	DATE

SHEET INDEX

		SD	DD	PC	CD
G000 (PC)	COVER SHEET	●	●	●	
G001	GENERAL NOTES		●	●	
G002	GENERAL NOTES		●	●	
G003	GENERAL NOTES		●	●	
G004	GENERAL NOTES, SYMBOLS & ABBREVIATIONS		●	●	
G010	FORMS AND APPROVALS		●	●	
G011	FORMS AND APPROVALS		●	●	
G012	FORMS AND APPROVALS		●	●	
G030	PLOT PLAN / SITE INFORMATION	○	●	●	
G040	FLOOR AREA PLANS	●	●	●	
G045	PARKING AREA PLANS		●	●	
G050	OCCUPANCY AND EGRESS (EXISTING)		●	●	
G051	OCCUPANCY AND EGRESS (BOXCAR)		●	●	
G052	OCCUPANCY AND EGRESS (NEW)		●	●	
G056	ACCESSIBILITY DIAGRAMS		●	●	
G057	ACCESSIBILITY DIAGRAMS		●	●	
G058	ACCESSIBILITY DIAGRAMS		●	●	
G059	ACCESSIBILITY DIAGRAMS		●	●	
G060	ARCHITECTURAL SURVEY	●	●	●	
G061	ARCHITECTURAL SURVEY	●	●	●	
C100	TITLE SHEET		●	●	
C110	EXISTING CONDITIONS / DEMO PLAN		●	●	
C120	GRADING PLAN		●	●	
C130	UTILITY PLAN		●	●	
C140	HORIZONTAL CONTROL PLAN		●	●	
C150	LID PLAN		●	●	
C160	EROSION CONTROL PLAN		●	●	
L001	GENERAL NOTES & SHEET INDEX		●	●	
L002	CONTEXT PLAN		●	●	
L003	OVERALL REFERENCE PLAN		●	●	
L004	PROJECT KEY PLAN		●	●	
L101	TREE DISPOSITION PLAN		●	●	
L102	TREE DISPOSITION PLAN		●	●	
L200	CONSTRUCTION NOTES & SCHEDULE		●	●	
L201	CONSTRUCTION PLAN		●	●	
L202	CONSTRUCUTION PLAN		●	●	
L203	CONSTRUCTION PLAN		●	●	
L204	CONSTRUCTION PLAN		●	●	
L300	LAYOUT NOTES & SCHEDULE		●	●	
L401	ENLARGEMENT PLAN		●	●	
L501	ELEVATIONS & SECTIONS		●	●	
L502	ELEVATIONS & SECTIONS		●	●	
L503	ELEVATIONS & SECTIONS		●	●	
L504	ELEVATIONS & SECTIONS		●	●	
L601	CONSTRUCTION DETAILS - PAVING & EDGING		●	●	
L610	CONSTRUCTION DETAILS - WALLS		●	●	
L611	CONSTRUCTION DETAILS - WALLS		●	●	
L620	CONSTRUCTION DETAILS - FENCES, GATES, & RAILINGS		●	●	
L621	CONSTRUCTION DETAILS - FENCES, GATES, & RAILINGS		●	●	
L630	CONSTRUCTION DETAILS - AMENITIES		●	●	
L800A	PLANTING NOTES & SCHEDULE		●	●	
L800B	OVERALL PLANTING PLAN		●	●	
L801	PLANTING PLAN		●	●	
L802	PLANTING PLAN		●	●	
L803	PLANTING PLAN		●	●	
L804	PLANTING PLAN		●	●	
A100	DEMO PLAN	●	●	●	
A110	SITE PLAN	●	●	●	
A200	GRID / SLAB PLAN	●	●	●	
A211	FLOOR PLAN - OVERALL	●	●	●	
A212	FLOOR PLANS - EXISTING MUSEUM	●	●	●	
A213	FLOOR PLANS - EXISTING MUSEUM	●	●	●	
A214	FLOOR PLANS - ENTRY PAVILION, BOX CAR PAVILION	●	●	●	
A215	FLOOR PLANS - NORTH	●	●	●	
A216	FLOOR PLANS - SOUTH	●	●	●	
A219	ROOF PLAN	●	●	●	
A220	CANOPY ROOF PLAN		●	●	
A240	ENLARGED STAIR PLANS	○	●	●	
A241	ENLARGED STAIR PLANS		●	●	
A300	EXTERIOR ELEVATIONS - LEARNING CENTER	●	●	●	
A301	EXTERIOR ELEVATIONS - BOXCAR PAVILION		●	●	
A302	EXTERIOR ELEVATIONS - ENTRY PAVILION		●	●	
A400	BUILDING SECTIONS	●	●	●	
A401	BUILDING SECTIONS	●	●	●	
A403	BUILDING SECTIONS - CANOPY		●	●	
A450	WALL SECTIONS	○	●	●	
A451	WALL SECTIONS		●	●	
A452	WALL SECTIONS		●	●	
A453	WALL SECTIONS - ENTRY PAVILION		●	●	
A454	WALL SECTIONS - BOXCAR PAVILION		●	●	
A600	SCHEDULES	○	●	●	
A610	WINDOW WALL ELEVATIONS		●	●	
A611	WINDOW WALL ELEVATIONS		●	●	
A612	WINDOW WALL ELEVATIONS		●	●	
A620	DOOR SCHEDULE		●	●	
A650	WALL AND CEILING TYPES		●	●	
S000	SHEET LIST	○	●	●	
S001	GENERAL NOTES		●	●	
S002	GENERAL NOTES		●	●	
S003	GENERAL NOTES		●	●	
S004	STATEMENT OF SPECIAL INSPECTIONS		●	●	
S005	MOMENT FRAME DETAILS - LADBS QUALITY ASSURANCE SHEET 1 OF 3		●	●	
S006	MOMENT FRAME DETAILS - LADBS QUALITY ASSURANCE SHEET 2 OF 3		●	●	
S007	MOMENT FRAME DETAILS - LADBS QUALITY ASSURANCE SHEET 3 OF 3		●	●	
S008	STRUCTURAL OBSERVATION REQUIREMENTS		●	●	
S201	OVERALL FOUNDATION PLAN		●	●	
S201A	LEARNING CENTER FOUNDATION PLAN - SOUTH		●	●	
S201B	LEARNING CENTER FOUNDATION PLAN - NORTH		●	●	
S201C	ENTRY PAVILION/BOXCAR PAVILION FOUNDATION PLAN		●	●	
S211	OVERALL GROUND FLOOR PLAN		●	●	
S211A	LEARNING CENTER GROUND FLOOR PLAN - SOUTH		●	●	
S211B	LEARNING CENTER GROUND FLOOR PLAN - NORTH		●	●	
S211C	ENTRY PAVILION/BOXCAR PAVILION GROUND FLOOR PLAN		●	●	
S211L	OVERALL GROUND FLOOR PLAN - LOADING		●	●	
S221	OVERALL ROOF PLAN		●	●	
S221A	LEARNING CENTER ROOF PLAN - SOUTH		●	●	
S221B	LEARNING CENTER ROOF PLAN - NORTH		●	●	
S221C	ENTRY PAVILION/BOXCAR PAVILION ROOF PLAN		●	●	
S221L	OVERALL ROOF PLAN - LOADING		●	●	
S227	CANOPY ROOF FRAMING PLAN		●	●	
S301	LEARNING CENTER TRUSS ELEVATION		●	●	
S311	LEARNING CENTER STRUCTURAL MOMENT FRAME ELEVATIONS		●	●	
S312	LEARNING CENTER STRUCTURAL BRACED FRAME ELEVATIONS		●	●	
S313	ENTRY PAVILION STRUCTURAL MOMENT FRAME ELEVATIONS		●	●	
S323	BOX CAR PAVILION SPECIAL MOMENT FRAME ELEVATIONS		●	●	
S331	LEARNING CENTER AUDITORIUM SECTIONS		●	●	
S332	BOX CAR AND CANOPY ELEVATIONS		●	●	
S333	CANOPY ELEVATIONS		●	●	
S610	STRUCTURAL PILE DETAILS		●	●	
S611	STRUCTURAL PILE CAP DETAILS		●	●	
S612	STRUCTURAL PILE CAP DETAILS		●	●	
S620	REINFORCED SCHEDULE LAP AND DEVELOPMENT LENGTH SCHEDULE		●	●	
S621	REINFORCED SCHEDULE LAP AND DEVELOPMENT LENGTH SCHEDULE		●	●	
S622	TYPICAL SLAB ON GRADE DETAILS		●	●	
S623	TYPICAL SLAB ON GRADE DETAILS		●	●	
S624	TYPICAL CONCRETE DETAILS		●	●	
S625	TYPICAL CONCRETE DETAILS		●	●	
S626	TYPICAL CONCRETE DETAILS		●	●	
S630	TYPICAL STEEL DETAILS		●	●	
S631	TYPICAL STEEL DETAILS		●	●	
S632	TYPICAL STEEL DETAILS		●	●	
S633	TYPICAL STEEL DETAILS		●	●	
S634	TYPICAL STEEL DETAILS		●	●	
S635	TYPICAL STEEL DETAILS		●	●	
S636	TYPICAL STEEL DETAILS		●	●	
S637	TYPICAL STEEL DETAILS		●	●	
S638	SPECIAL MOMENT FRAME DETAILS		●	●	
S640	SFRS STEEL SPECIAL CONCENTRIC BRACED FRAME DETAILS		●	●	
S650	TYPICAL METAL DECK DETAILS		●	●	
S651	TYPICAL METAL DECK DETAILS		●	●	
S652	TYPICAL METAL DECK DETAILS		●	●	
S653	TYPICAL METAL DECK DETAILS		●	●	
S654	TYPICAL METAL DECK DETAILS		●	●	
S655	TYPICAL METAL DECK DETAILS		●	●	

GENERAL NOTES

1. THE STRUCTURAL, ELECTRICAL AND MECHANICAL GENERAL NOTES ARE IN ADDITION TO THE FOLLOWING NOTES; IF CONFLICTING NOTES ARE FOUND, THE MORE CONSERVATIVE SHALL TAKE PRECEDENCE.

2. THE GENERAL NATURE OF THESE NOTES SHALL IN NO WAY DIMINISH THE CONTRACTOR AND SUB-CONTRACTORS FROM COMPLETING ALL WORK IN STRICT CONFORMANCE WITH ALL ASPECTS OF THE BUILDING CODES AND WITH OTHER RULES, REGULATIONS AND GOVERNING ORDINANCES. EACH SUB-CONTRACTOR SHALL BECOME FAMILIAR WITH ANY PART OF THE AFOREMENTIONED BUILDING CODES, RULES, ETC. THAT MAY AFFECT HIS WORK. IN THE EVENT THE FOLLOWING CONSTRUCTION DOCUMENTS HAVE NOT INCLUDED DETAILS PERTAINING TO SPECIFIC CONDITIONS, BY ACCEPTING THE CONTRACT, THE CONTRACTOR AND SUBCONTRACTORS AGREE TO INCORPORATE AND BUILD TO THE PREVAILING BUILDING CODES, REGULATIONS AND INDUSTRY STANDARDS.

3. SCOPE OF PERMIT
A. LIMIT OF AUTHORIZATION. THE ISSUANCE OF A PERMIT IS NOT AN APPROVAL OR AN AUTHORIZATION OF THE WORK SPECIFIED THEREIN. A PERMIT IS MERELY AN APPLICATION FOR INSPECTION. THE ISSUANCE OF WHICH ENTITLES THE PERMITTEE TO INSPECTION OF THE WORK, WHICH IS DESCRIBED THEREIN. PERMITS ISSUED UNDER THE REQUIREMENTS OF THIS CODE SHALL NOT RELIEVE THE OWNER OF RESPONSIBILITY FOR SECURING REQUIRED PERMITS FOR WORK TO BE DONE WHICH IS REGULATED BY ANY OTHER CODE, DEPARTMENT OR DIVISION OF THE CITY IN WHICH THE WORK IS PERFORMED.
B. VALIDITY OF OTHER LAWS. NEITHER ISSUANCE OF A PERMIT NOR THE APPROVAL OF THE BUILDING DEPARTMENT OF ANY DOCUMENT SHALL CONSTITUTE AN APPROVAL OF ANY VIOLATION OF ANY PROVISION OF THIS CODE OR OF ANY OTHER LAW OR ORDINANCE, AND A PERMIT OR OTHER DOCUMENT PURPORTING TO GIVE AUTHORITY TO VIOLATE ANY LAW SHALL NOT BE VALID WITH RESPECT THERETO.

4. ALL WORK, CONSTRUCTION AND MATERIALS SHALL COMPLY WITH ALL PROVISIONS OF THE CURRENT EDITION OF THE GOVERNING BUILDING CODE AND WITH OTHER RULES, REGULATIONS, AND GOVERNING ORDINANCES. BUILDING CODE REQUIREMENTS TAKE PRECEDENCE OVER THE DRAWINGS AND IT SHALL BE THE RESPONSIBILITY OF ANYONE SUPPLYING LABOR, MATERIAL OR BOTH TO INSTALL HIS WORK IN CONFORMANCE WITH THE BUILDING CODE AND TO BRING TO THE ATTENTION OF THE ARCHITECT ANY DISCREPANCIES OR CONFLICTS BETWEEN THE REQUIREMENTS OF THE BUILDING CODE AND THE DRAWINGS. THE ABOVE SHALL APPLY TO ALL DIVISIONS.

5. DIMENSION & CONDITIONS AT THE JOB SITE SHALL BE VERIFIED BY THE CONTRACTOR(S). DISCREPANCIES IN THE DRAWINGS OR BETWEEN THE DRAWINGS AND ACTUAL FIELD CONDITIONS SHALL BE REPORTED TO THE ARCHITECT IN WRITING. CORRECTED DRAWINGS AND/OR INSTRUCTIONS SHALL BE ISSUED BY THE ARCHITECT PRIOR TO THE INSTALLATION OF ANY WORK.

6. ELECTRICAL, PLUMBING AND MECHANICAL PLANS SHALL BE SUBMITTED FOR PLAN CHECK AND BE APPROVED PRIOR TO THE BEGINNING OF CONSTRUCTION. ALL WORK IN THESE AREAS SHALL BE IN CONFORMANCE WITH THE APPLICABLE BUILDING CODES. SPECIAL REFERENCE IS HEREBY MADE TO THE SEISMIC BRACING, TIE DOWNS, ETC. & CODE REQUIRED FOR APPLIANCES, EQUIPMENT, ETC.

7. CONSTRUCTION SAFETY:
A. ALL WORK SHALL CONFORM TO THE OSHA CONSTRUCTION SAFETY REQUIREMENTS.
B. PEDESTRIAN PROTECTION SHALL CONFORM TO THE REQUIREMENTS OF THE LOCAL BUILDING CODE.

8. TEMPORARY TOILET: MAINTAIN SANITARY TOILET FACILITIES DURING CONSTRUCTION.

9. SITE COORDINATION: CONTRACTOR TO COORDINATE TRADES & EXISTING CONDITION WITH INSTALLATION & OPERATION FOR EACH SYSTEM. SEE SUBMITTAL SPECIFICATION.

10. STAIRS - SEE ADA GENERAL NOTES

11. RAMP REQUIREMENTS - SEE ADA GENERAL NOTES

12. GUARDRAILS: ALL UNENCLOSED FLOOR AND DOOR OPENINGS, OPEN AND GLAZED SIDES OF LANDINGS AND STAIRS,BALCONIES OR PORCHES WHICH ARE MORE THAN 30" ABOVE GRADE, AND ROOFS USED FOR OTHER THAN SERVICE OF THE BUILDING SHALL BE PROTECTED BY A GUARDRAIL WITH A MINIMUM HEIGHT OF 42". OPEN GUARDRAILS AND STAIR RAILINGS SHALL HAVE INTERMEDIATE RAILS OR AN ORNAMENTAL PATTERN SUCH THAT NO OBJECT 4" IN DIAMETER CAN PASS THROUGH. GUARD RAILS SHALL BE DESIGNED FOR 50. LB/FT. LATERAL LOAD AT EXIT FACILITIES SERVING AN OCCUPANT LOAD > 50, 20.LB/FT. LATERAL LOAD ELSEWHERE. SEE STRUCTURAL CALCULATIONS AND DETAILS.

13. BATHROOMS:
A. REFER TO DIVISION 9, DRYWALL.
B. IN OTHER THAN DWELLING UNITS, (PUBLIC AREAS, TOILETS, SHOWERS, SAUNAS, ETC.) TOILET ROOM FLOORS SHALL HAVE A SMOOTH, HARD, NON-ABSORBENT, MATERIAL SUCH AS PORTLAND CEMENT, CONCRETE, CERAMIC TILE, OR OTHER APPROVED MATERIAL WHICH EXTENDS UPWARD ONTO THE WALLS AT LEAST 5". WALLS WITHIN WATER CLOSET COMPARTMENTS AND WALLS WITHIN 2 FT. OF THE FRONT AND SIDES OF URINALS SHALL BE SIMILARLY FINISHED TO A HEIGHT OF 4 FT. MINIMUM.

14. CEILING PROJECTIONS: THERE WILL BE NO PROJECTIONS, (LIGHT FIXTURES, ETC.) BELOW THE 7'-0" HIGH CEILINGS AT HALLWAYS, CLOSETS, KITCHENS, ETC. IF PROJECTIONS SUCH AS LIGHT FIXTURES ARE BELOW 7'-0" THEN MUST PROJECT NO MORE THAN 4" FROM THE FINISH SURFACE.

15. TRASH ENCLOSURES: SHALL BE OF NON-COMBUSTIBLE CONSTRUCTION.

16. FIRE ASSEMBLIES:
A. ALL FIRE ASSEMBLIES SHALL BE LABELED BY AN APPROVED TESTING AGENCY EXCEPT OVERSIZE FIRE DOORS WHICH SHALL BE PROVIDED WITH A CERTIFICATE OF INSPECTION FURNISHED BY AN APPROVED TESTING AGENCY VERIFYING THAT THE OVERSIZE DOOR COMPLIES WITH THE DESIGN MATERIALS AND CONSTRUCTION REQUIREMENTS.
B. A SIGN SHALL BE DISPLAYED PERMANENTLY NEAR OR ON EACH REQUIRED FIRE DOOR IN LETTERS NOT LESS THAN 1" HIGH TO READ AS FOLLOWS: DO NOT OBSTRUCT ANY FIRE DOOR

17. FIRE RESISTIVE WALLS OR PARTITIONS:
A. SHALL CONFORM TO LOCAL BUILDING CODE.
B. DIVISION OR DRAFT ENCLOSURE WALLS: SHALL NOT BE PIERCED BY ELECTRICAL PANELS, FIRE HOSE CABINETS, STOVE VENTS, OR ANY OTHER ITEM. OPENINGS INTO 1-HOUR SHAFTS SHALL BE PROTECTED BY 1-HOUR FIRE-PROTECTED ASSEMBLIES WITH SELF-CLOSERS.
OPENINGS INTO 2-HOUR SHAFTS SHALL BE PROTECTED WITH 1 ½ HOUR FIRE-PROTECTED ASSEMBLIES WITH SELF-CLOSERS. PROVIDE FIRE DAMPERS RATED FOR OPENINGS WHERE DUCTS PIERCE SHAFT ENCLOSURES. SLEEVES AND INSTALLATION PROCEDURES SHALL BE APPROVED BY BUILDING INSPECTOR PRIOR TO INSTALLATION.
C. BLDG. SEPARATION WALLS: SHALL HAVE A MINIMUM FIRE RESISTANCE OF 1 HOUR WITH ALL OPENINGS WITHIN THE WALL HAVING A 3/4 HOUR FIRE RESISTANCE AND SHALL CONFORM TO THE REQUIREMENTS OF THE LOCAL BUILDING CODE.
D. 3-HOUR SEPARATIONS: 8" CONCRETE BLOCK WITH ALL CELLS GROUTED SOLID.
E. 1-HOUR CONSTRUCTION: BUILDING SHALL BE OF ONE-HOUR FIRE RESISTIVE CONSTRUCTION WHERE NOTED ON DRAWINGS. 1 LAYER 5/8" TYPE X GYP. BD. ON EACH SIDE OF 16 GA. METAL STUD FRAME CONSTITUTES ONE-HOUR CONSTRUCTION.

18. OPENINGS:
A. FLOOR - CEILING OR ROOF - CEILING OPENINGS.
B. OPENINGS IN WALLS AND PARTITIONS SHALL BE PROTECTED. WHERE FIRE-RATED WALLS AND PARTITIONS REQUIRE PROTECTED OPENINGS, THE FOLLOWING PENETRATIONS INTO OR THROUGH SUCH CONSTRUCTION ARE PERMITTED:
1) COPPER OR FERROUS PIPES OR CONDUITS MAY PENETRATE WALLS OR PARTITIONS, IF FIRE STOPPED
AS REQUIRED BY THE BUILDING CODE.
2) STEEL ELECTRICAL OUTLET BOXES NOT EXCEEDING 16 SQ. IN. IN AREA, PROVIDED THAT THE AREA OF SUCH OPENINGS DOES NOT AGGREGATE MORE THAN 100 SQ. IN. FOR ANY 100SQ.FT. OF WALL OR PARTITION AREA. OUTLET BOXES ON OPPOSITE SIDES OF WALLS OR PARTITIONS SHALL BE SEPARATED BY A HORIZONTAL DISTANCE OF 24". THE SPACE BETWEEN THE PENETRATING MATERIALS DESCRIBED IN ITEMS 1 & 2 MOVEMENT OF FLAMES AND GASES.

C. CORRIDOR CONSTRUCTION: WALLS AND CEILINGS OF 5/8" TYPE "X" GYPSUM WALL BOARD INSTALLED PER CHAPTER 43, OF THE BUILDING CODE, FOR 1-HOUR CONSTRUCTION.
1) OPENINGS: WHERE CORRIDOR WALLS ARE REQUIRED TO BE OF 1-HOUR FIRE RESISTIVE CONSTRUCTION, EVERY DOOR SHALL BE PROTECTED BY A TIGHT-FITTING SMOKE AND DRAFT CONTROL DOOR ASSEMBLY HAVING A FIRE-PROTECTION RATING OF NOT LESS THAN 3/4 HOUR. OTHER CORRIDOR INTERIOR OPENINGS SHALL BE FIXED AND PROTECTED BY APPROVED 1/4" THICK WIRE GLASS INSTALLED IN STEEL FRAMES.

D. FLOORS: BUILDING PAPER SHALL BE LAID BETWEEN SUBFLOOR AND FINISHED FLOOR.
E. WALLS: 5/8" APPROVED TYPE "X" GYPSUM WALLBOARD FASTENED METAL STUDS PER BUILDING CODE; JOINTS CEMENTED AND TAPED.
F. CEILINGS: ANY ASSEMBLY SPECIFIED PER LOCAL BUILDING CODE

19. PARTS OR PORTIONS OF STRUCTURES, NON-STRUCTURAL COMPONENTS AND THEIR ANCHORAGE TO THE MAIN STRUCTURAL SYSTEM SHALL BE DESIGNED FOR LATERAL FORCES.

METAL (SEE STRUCTURAL GENERAL NOTES)

CARPENTRY

1. GENERAL: ALL REQUIREMENTS OF THE CALIFORNIA BUILDING CODE SHALL BE MET.

2. STUD WALLS: TYPICAL WALLS SHALL BE FRAMED WITH 20 GAUGE METAL STUDS AT 16" O.C. EXCEPT WHERE NOTED OTHERWISE.
AMERICAN STEEL FRAMING SOLUTIONS. ICC-ESR 2915

3. FIRE STOPS FOR STUD WALLS AND PARTITIONS: ENCLOSED SPACES IN STUD WALLS, PARTITIONS AND FURRED WALLS SHALL BE FIRE-STOPPED AT THE TOP AND BOTTOM AND ALSO AT THE MID-POINT IN WALLS MORE THAN 10 FEET HIGH. THE DISTANCE BETWEEN FIRE-STOPS IN WALLS AND PARTITIONS SHALL NOT EXCEED 10 FEET MEASURED HORIZONTALLY OR VERTICALLY. TOP AND BOTTOM PLATES WHICH FILL ALL SPACES BETWEEN STUDS AND FURRING SHALL BE CONSIDERED FIRE-STOPS.

4. NOTCHING & BORING: AT EXTERIOR WALLS AND BEARING WALLS STUDS SHALL NOT BE NOTCHED MORE THEN 25 % WIDTH OF STUD. AT NON-BEARING PARTITIONS NOT MORE THAN 40% WIDTH OF STUDS. BORED HOLES: MAX DIAMETER 40% ANY STUD AND 60% NON-BEARING STUD PARTITIONS OR IN ANY WALL WHERE EACH BORED STUD IS DOUBLED, PROVIDED NOT MORE THEN 2 SUCH SUCCESSIVE DOUBLED STUDS ARE SO BORED: NO BORED HOLE CLOSER THEN 5 / 8" TO EDGE OF STUD. (SEE DIVISION 15, PLUMBING NOTES WITHIN THESE GENERAL NOTES)

5. PENETRATIONS: PENETRATIONS IN WALLS REQUIRING PROTECTED OPENINGS SHALL BE FIRE-STOPPED. FIRESTOPPING SHALL BE AN APPROVED MATERIAL SECURELY INSTALLED AND CAPABLE OF MAINTAINING ITS INTEGRITY WHEN SUBJECTED TO TEST TEMPERATURES PRESCRIBED IN U.B.C. STANDARD NO. 43-1 FOR THE SPECIFIC WALL OR PARTITION.

6. PROVIDE DRAFT STOPS FOR FLOOR-CEILING ASSEMBLIES. DRAFT STOPS ARE REQUIRED ABOVE AND IN LINE WITH WALLS SEPARATING TENANT SPACES FROM EACH OTHER AND FROM OTHER USES.

7. PROVIDE ACOUSTIC ISOLATION WHERE REQUIRED BY DETAILS AND SPECIFICATIONS

DOORS & WINDOWS

1. EXIT DOORS: EVERY EXIT DOOR SHALL BE OPENABLE FROM THE INSIDE WITHOUT THE USE OF A KEY OR ANY SPECIAL KNOWLEDGE OR EFFORT. SPECIAL LOCKING DEVICES SHALL BE OF AN APPROVED TYPE.. EXIT DOOR MUST OPEN OVER A LANDING NOT MORE THAN 1 / 2" BELOW THE THRESHOLD. (CBC SEC. 1015) EXIT DOORS SERVING 50 OR MORE OCCUPANTS SHALL OPEN IN THE DIRECTION OF EGRESS.

2. FIRE DOORS SHALL BE SELF CLOSING (OR AUTOMATIC CLOSING WHERE REQUIRED) LABELED "FIRE ASSEMBLIES". INCLUDING FRAME AND HARDWARE EQUIPPED WITH METAL THRESHOLD, AND WITHOUT MAIL SLOTS AND VENTS OPENINGS.

3. GLAZING:
A. GLASS THICKNESS, STRENGTH, MATERIALS AND METHOD OF INSTALLATION SHALL CONFORM WITH REQUIREMENTS OF LOCAL BUILDING CODES.
B. GLASS AND GLAZING IN LOCATIONS WHICH MAY BE SUBJECT TO HUMAN IMPACT SUCH AS FRAMELESS GLASS DOORS, GLASS PANELS, GLASS EXIT AND ENTRANCE DOORS, SLIDING GLASS DOORS, SHOWER DOORS, TUB ENCLOSURES, AND STORM DOORS SHALL MEET THE REQUIREMENTS SET FORTH IN THE LOCAL BUILDING CODE.
C. GLASS DOORS, ADJACENT PANELS AND ALL GLAZED OPENINGS WITHIN 18" OF THE ADJACENT FLOOR, WHOSE LEAST DIMENSION IS GREATER THAN 18", SHALL BE OF GLASS APPROVED FOR IMPACT HAZARD.
D. ALL GLASS MUST COMPLY WITH U.S. CONSUMER SAFETY PROTECTION COMMISSION REQUIREMENTS.

4. SMOKE AND DRAFT CONTROL: DOORS REQUIRED TO HAVE SMOKE AND DRAFT CONTROL ASSEMBLIES SHALL BE PROVIDED WITH A GASKET SO INSTALLED AS TO PROVIDE A SEAL WHERE THE DOOR MEETS THE STOP ON BOTH SIDES AND ACROSS THE TOP.

5. SECURITY PROVISIONS: ALL OPENINGS NOTED WITH SYMBOL ARE SECURITY OPENINGS AND THE FOLLOWING NOTES SHALL APPLY: GLAZED OPENINGS SHALL CONFORM TO THE REQUIREMENTS OF SECURITY PROVISION OF LOCAL BUILDING CODE. ENTRY DOORS SHALL BE ARRANGED SO THAT THE OCCUPANT HAS A VIEW OF THE AREA IMMEDIATELY OUTSIDE THE DOOR. SUCH A VIEW MAY BE PROVIDED WITH A DOOR VIEWER.

6. SWINGING DOORS:
A. ALL PIN-TYPES HINGES WHICH ARE ACCESSIBLE FROM OUTSIDE THE SECURED AREA WHEN THE DOOR IS CLOSED SHALL HAVE NON-REMOVABLE HINGE PINS. IN ADDITION THEY SHALL HAVE MINIMUM 1 / 4" DIAMETER STEEL JAMB STUD WITH 1 / 4" MINIMUM PROJECTION UNLESS THE HINGES ARE SHAPED TO PREVENT REMOVAL OF THE DOOR IF THE HINGE PINS ARE REMOVED.
B. THE STRIKE PLATE FOR LATCHES AND THE HOLDING DEVICE FOR PROJECTING DEADBOLTS IN CONSTRUCTION SHALL BE SECURED TO THE JAMB AND THE WALL FRAMING WITH SCREWS OF NOT LESS THAN TWO 1 1/2" LENGTH.
C. DEADBOLTS SHALL CONTAIN HARDENED INSERTS.
D. STRAIGHT DEADBOLTS SHALL HAVE A MINIMUM THROW OF 1" AND EMBEDMENT OF NOT LESS THAN 5/8" INTO THE HOLDING DEVICE RECEIVING THE PROJECTED BOLT.
E. A HOOK-SHAPED OR AN EXPANDING-LUG DEADBOLT SHALL HAVE A MINIMUM THROW OF 3 /4".
F. HOLLOW CORE DOOR OR DOORS LESS THAN 1-3 /8" THICKNESS SHALL BE COVERED ON THE INSIDE FACE WITH 16 GAUGE SHEET METAL ATTACHED WITH SCREWS AT 6" ON CENTER AROUND THE PERIMETER OR EQUIVALENT.
G. GLASS DOORS SHALL HAVE TEMPERED/ LAMINATED GLAZING FULLY COMPLYING WITH THE LOCAL BUILDING CODE.
H. DOORS SHALL BE PROVIDED WITH A KEY-OPERATED LOCKS ON THE EXTERIOR AND SHALL BE OPENABLE FROM THE INTERIOR WITHOUT A KEY, SPECIAL KNOWLEDGE OR SPECIAL EFFORT.
I. GLAZED OPENINGS WITHIN 40" OF THE LOCKING DEVICE OF THE DOOR OR WINDOW SHALL BE FULLY TEMPERED GLASS OR APPROVED BURGLARY RESISTANT MATERIAL, OR SHALL BE PROTECTED BY METAL BARS, SCREENS OR GRILLS HAVING A PATTERN SUCH THAT THE MAX. DIMENSION OF ANY OPENING DOES NOT EXCEED 2"
J. DOOR LOCKING DEVICES SHALL BE A TYPE THAT WILL BE READILY DISTINGUISHABLE AS LOCKED. EXIT DOORS USED IN PAIRS SHALL HAVE APPROVED AUTOMATIC FLUSH BOLTS.
K. ONE-HOUR RATED DOOR ASSEMBLIES SHALL HAVE NON-COMBUSTIBLE STILES EXTENDING THE FULL WIDTH OF THE DOOR FRAME. THE ASSEMBLY SHALL BE CAPABLE OF WITHSTANDING A MAXIMUM 450 F TEMPERATURE RISE ABOVE AMBIENT TEMPERATURE AFTER 30 MINUTES OF FIRE TEST.

7. CYLINDER GUARDS: SHALL BE INSTALLED ON ALL CYLINDER LOCKS WHENEVER THE CYLINDER PROJECTS BEYOND THE FACE OF THE DOOR OR IS OTHERWISE ACCESSIBLE TO GRIPPING TOOLS.

FINISHES

1. INTERIOR FINISHES SHALL COMPLY WITH THE FLAME SPREAD AND SMOKE DENSITY REQUIREMENTS OF THE LOCAL BUILDING CODE. SEE FIRE GENERAL NOTES.

2. PLASTERED SURFACES: ON WALLS, CEILINGS, AND ROOF SOFFITS EXPOSED TO WEATHER SHALL HAVE EXTERIOR LATH AND PLASTER.

3. LATH AND WALLBOARD: IN-PLACE INSPECTION IS REQUIRED FOR ALL INTERIOR AND EXTERIOR LATH AND/OR WALLBOARD BEFORE ANY PLASTERING IS APPLIED OR ANY JOINTS AND FASTENERS HAVE BEEN TAPED AND FINISHED.

4. DRYWALL:
A. DRYWALL SHALL CONFORM TO THE CALIFORNIA BUILDING CODES.
B. DRYWALL LOCATED BEHIND REQUIRED NON-ABSORBENT SURFACES SHALL BE WATER-RESISTANT.
C. ALL DRYWALL SURFACES SHALL BE TAPED, PATCHED, SANDED, PRIMED, AND PAINTED (COLOR BY ARCHITECT) UNLESS NOTED OTHERWISE.
D. PROVIDE CORNER BEAD AND J-MOLD AT ALL EXPOSED DRYWALL EDGES AND TERMINATIONS.

SPECIAL CONSTRUCTION

1. SOUND TRANSMISSION CONTROL: REFER TO DRAWING AND SPECIFICATION STANDARDS FOR SOUND RATED PARTITIONS AND IMPACTED RATED FLOOR/CEILING ASSEMBLIES.
A. WALLS: SHALL HAVE AIRBORNE SOUND CONTROL WITH MINIMUM STC RATING OF 50.
B. FLOORS/CEILINGS: SHALL HAVE AIRBORNE SOUND CONTROL WITH MINIMUM STC RATING OF 50 AND IMPACT SOUND CONTROL WITH MINIMUM LLC RATING OF 50.

2. ADDITIONAL REQUIREMENTS:
A. AN APPROVED PERMANENT, AND RESILIENT ACOUSTICAL SEALANT IS REQUIRED ALONG THE JOINT BETWEEN THE FLOOR AND THE SEPARATION WALLS. SEE ACOUSTICAL SPECIFICATIONS.
B. ALL PENETRATIONS INTO SOUND RATED PARTITIONS OR FLOOR/CEILING ASSEMBLIES WILL BE SEALED WITH APPROVED RESILIENT SEALANT. SEE DRAWINGS AND ACOUSTICAL SPECIFICATIONS.
C. ALL RIGID CONDUIT, DUCTS, PLUMBING PIPES AND APPLIANCE VENTS LOCATED IN SOUND ASSEMBLIES WILL BE ISOLATED FROM THE BUILDING CONSTRUCTION BY MEANS OF RESILIENT SLEEVES, MOUNTS OR MINIMUM 1 /4" THICK APPROVED RESILIENT MATERIAL. (EXCEPTION: GAS PIPING NEED NOT BE ISOLATED).
D. METAL VENTILATING AND CONDITIONED AIR DUCTS LOCATED IN SOUND ASSEMBLIES WILL BE LINED. (EXCEPTION: DUCTS SERVING ONLY KITCHEN COOKING FACILITIES, AND BATHROOMS NEED NOT BE LINED.)
E. WALL MOUNTED LAVATORIES AND TOILETS ARE NOT PERMITTED ON SOUND RATED PARTITIONS.
F. COMBUSTION AIR, KITCHEN AND BATHROOM EXHAUST DUCTS WITHIN SOUND-SEPARATION ASSEMBLIES SHALL BE WRAPPED WITH APPROVED INSULATION.

3. ELECTRICAL REQUIREMENTS: AN OUTLET BOX IS DEFINED AS A BOX USED FOR RECEPTACLES, SWITCHES, SURFACE-MOUNTED LIGHTING FIXTURES, JUNCTION POINTS, TELEPHONE, THERMOSTATS, TELEVISION USES, ETC. NO BOX DIMENSION SHALL EXCEED 6". SEE ELECTRICAL DRAWINGS AND SPECIFICATIONS.

A. ONLY OUTLET BOXES AND A CEILING EXHAUST FAN IN THE BATHROOM WILL BE PERMITTED IN WALLS AND CEILINGS OF SOUND RATED CONSTRUCTION. ALL OTHER EQUIPMENT AND DEVICES WHICH INCLUDE RECESSED FIXTURES, PANEL BOARDS, HEATERS, KITCHEN EXHAUST FAN, SOUND PRODUCING EQUIPMENT, BELLS, INTERCOMS, ETC. SHALL NOT BE INSTALLED IN THESE SOUND RATED WALLS AND CEILINGS UNLESS PRIOR APPROVAL HAS BEEN OBTAINED FROM THE ACOUSTICAL ENGINEER.

B. OUTLET BOXES MAY BE INSTALLED IN THE SOUND RATED WALLS AND CEILINGS AS FOLLOWS:
1) BOXES WHICH PENETRATE THE WALL IN ONE AREA OR OCCUPANCY SHALL NOT BE INSTALLED IN THE SAME SPACE BETWEEN STUDS CONTAINING A BOX WHICH PENETRATES INTO ANOTHER AREA OR OCCUPANCY.
2) THERE SHALL BE ONE SOLID STUD BETWEEN OUTLET BOXES AND MINIMUM 24" SEPARATION FROM CENTER TO CENTER.
3) OUTLET BOXES SHALL HAVE A DEPTH OF NOT MORE THEN 1-1/2", SO AS TO ALLOW THE REQUIRED 2" UNCOMPRESSED INSULATION TO BE INSTALLED IN A STANDARD 2" X 4" WALL. ON WALLS OF DEEPER DIMENSIONS, BOXES OF GREATER DEPTH MAY BE USED.
4) BACK AND SIDES OF BOXES SHALL BE SEALED WITH 1/8" RESILIENT SEALANT AND BACKED WITH 2" MINIMUM MINERAL FIBER INSULATION (TV, TELEPHONE AND INTERCOM OUTLETS MUST BE INSTALLED IN BOXES ACCORDINGLY).
5) CONDUITS OR RACEWAYS (STUBOUTS) MAY PENETRATE THE SOUND RATED WALLS OR CEILINGS, PROVIDED THE CONDUIT IS COVERED AT THE PENETRATION POINT WITH A PERMANENTLY RESILIENT SEALANT.
6) THE REQUIREMENTS FOR OUTLET BOXES INSTALLED FOR TELEVISIONS, TELEPHONES AND THERMOSTATS (ELECTRICAL AND PNEUMATIC) SHALL BE THE SAME AS FOR RECEPTACLES OR SWITCHES. PLASTER RINGS, OPEN BACK BOXES, OR MOUNTING PLATES SHALL NOT BE PERMITTED.
7) WHERE METALLIC RACEWAYS MATERIAL (RIGID METAL CONDUIT, STEEL TUBE) IS INSTALLED IN SOUND RATED FLOOR JOIST WITH A RESILIENT MATERIAL AT THE POINTS OF SUPPORT. AT THE POINT WHERE THE RACEWAYS PASS THROUGH HOLES OR NOTCHES, CARE SHOULD BE TAKEN TO INSURE THAT THE RACEWAY DOES NOT TOUCH THE SURFACE OF THE JOISTS. THE RESILIENT MATERIAL USED MAY BE RUBBER, CARPET PADDING, OR OTHER APPROVED MATERIAL.
8) WHEN RIGID METALLIC RACEWAY IS INSTALLED IN THE FLOOR-CEILING SPACES, THE SPACE SHALL HAVE A MINIMUM OF 2" OF MINERAL INSULATION BELOW. CARE SHOULD BE TAKEN DURING INSTALLATION OF THE RACEWAY TO ALLOW FOR THIS 2" OF NONCOMPRESSED INSULATION BELOW.
C. FLOOR-CEILING ASSEMBLIES BETWEEN RESIDENTIAL AREAS AND EQUIPMENT PENTHOUSES (AC UNITS ETC.) SHALL BE INSTALLED IN ACCORDANCE TO MEET THE SOUND SEPARATION REQUIREMENTS.
D. DOORS TO UNITS FROM INTERIOR CORRIDORS ARE REQUIRED TO HAVE A MINIMUM STC RATING OF 30 (LAMINATED 1 3/4" SOLID-CORE DOORS WITH RESILIENT STOPS AND GASKETS MEET THIS REQUIREMENT).
E. MINERAL FIBER INSULATION SHALL BE INSTALLED IN JOIST SPACES TO A POINT 12" BEYOND THE PIPE OR DUCT, WHENEVER A PLUMBING PIPE, OR DUCT PENETRATES A FLOOR-CEILING ASSEMBLY FROM WITHIN A WALL.
F. SURFACE MATERIAL (INCLUDING CARPETS) ARE PART OF THE FLOOR-CEILING ASSEMBLY AND MUST BE INSTALLED AND INSPECTED BEFORE THE CERTIFICATE OF OCCUPANCY IS ISSUED.
G. OUTLETS IN A 2 HOUR FIRE RESISTIVE SEPARATION WALL MUST TERMINATE IN AN ALL STEEL FLUSH MOUNT BOX.
10. FIRE SPRINKLER SYSTEMS MUST BE APPROVED BY PLUMBING DIVISION PRIOR TO FINAL OCCUPANCY. CONTRACTOR TO PROVIDE DESIGN BUILD OF ENTIRE SYSTEM AND OBTAIN ALL NECESSARY APPROVAL FORM PLUMBING DIVISION, BUILDING DEPARTMENT, AND STATE FIRE MARSHALL.

MISCELLANEOUS NOTES

1. UNPROTECTED OPENINGS ARE PROHIBITIVE IN ENVELOPE PROJECTION TYPE CEILINGS. ALL DUCT OPENINGS REQ. FIRE DAMPERS AND ARE LIMITED TO 100 SQ. IN. OF CEILING ACCESS OPENINGS REQ. 1HR. FIRE RATED ASSEMBLIES W/ CLOSING DEVICES APPROVED BY THE BUILDING DEPARTMENT. SEE MECHANICAL NOTES.

2. SEISMIC REQUIREMENTS: PERIMETER MEMBERS. A MINIMUM WALL ANGLE SIZE OF AT LEAST A 2" (51MM) HORIZONTAL LEG SHALL BE USED AT PERIMETER WALLS & INTERIOR FULL HEIGHT PARTITION. THE FIRST CEILING TILE SHALL MAINTAIN 3/4" (19MM) CLEAR FROM THE FINISH WALL SURFACE. AN EQUIVALENT ALTERNATIVE DETAIL THAT WILL PROVIDE SUFFICIENT MOVEMENT DUE TO ANTICIPATED LATERAL BUILDING DISPLACEMENT MAY BE USED IN LIEU OF THE LONG LEG ANGLE SUBJECT TO THE APPROVAL OF THE SUPERINTENDENT OF BUILDING DEPARTMENT.

FIRE GENERAL NOTES:

CORRIDOR & OPENINGS
1. DOORS OPENING INTO ONE-HOUR FIRE-RESISTIVE CORRIDORS SHALL BE PROTECTED WITH A SMOKE OR DRAFT-STOP FIRE ASSEMBLY HAVING A MINIMUM 20 MINUTE RATING. DOORS MUST BE SELF CLOSING.

2. FIRE BLOCKING MUST BE PROVIDED IN ACCORDANCE WITH SECTION 708.2.1 IN OPENINGS AROUND VENTS, PIPES, DUCTS, CHIMNEYS, FIREPLACES AND SIMILAR OPENINGS WHICH AFFORD A PASSAGE FOR FIRE AT CEILING AND FLOOR LEVELS, WITH NONCOMBUSTIBLE MATERIALS.

3. PROVIDE 2 HOUR FIRE-RATED CAULK BY APPROVED MANUFACTURER AROUND ALL FLOOR PENETRATIONS.

INTERIOR FINISHES & FLAME RETARDANCE:
1. INTERIOR WALL AND CEILING FINISHES FOR LOBBY SPACES SHALL NOT EXCEED A FLAME-SPREAD CLASSIFICATION OF 200 (CLASS III)

2. INTERIOR WALL AND CEILING FINISHES FOR EXIT CORRIDORS SHALL NOT EXCEED A FLAME-SPREAD CLASSIFICATION OF 75 (CLASS II)

3. INTERIOR WALL AND CEILING FINISHES FOR ENCLOSED STAIRWAYS SHALL NOT EXCEED A FLAME-SPREAD CLASSIFICATION OF 25 (I)

EXITS
1. ALL EXITS MUST BE CONTINUOUS AND TERMINATE IN A PUBLIC WAY OR EXIT COURT LEADING TO PUBLIC WAY OR AN APPROVED REFUGE AREA. (TITLE 24)

2. AN EXIT WALKWAY WITH A MINIMUM WIDTH OF 44" SHALL BE MAINTAINED CONTINUOUSLY TO A PUBLIC WAY. EXIT PATHS OR WALKWAYS TO PUBLIC WAY SHALL BE CLEARLY DELINEATED. EXIT PATHS MAY BE DELINEATED BY PAINTED LINES, RAILINGS, BARRIER POSTS, WALKS, OR OTHER APPROVED MEANS.

3. STAIR ENCLOSURES REQUIRED FOR ALL INTERIOR STAIRWAYS SERVING FOUR OR MORE STORIES SHALL EXTEND TO ROOF SURFACE AND BE CONTINUOUS UNTIL EGRESS IS PROVIDED FROM BUILDING TO A PUBLIC WAY WITHOUT OBSTRUCTIONS, SUCH AS INTERVENING DOORS AND GATES.

4. EXIT ENCLOSURE REQUIRED FOR ALL PUBLIC STAIRWAYS ENCLOSURE SHALL BE CONTINUOUS UNTIL EGRESS IS PROVIDED FROM BUILDING. - ALL OPENINGS TO BE PROTECTED BY 1HR. SELF CLOSING FIRE ASSEMBLIES. NO OPENINGS OTHER THAN EXIT DOORWAYS & EXTERIOR WALL OPENINGS ARE PERMITTED.

5. EXIT DOOR SHALL SWING IN THE DIRECTION OF EXIT TRAVEL WHEN SERVING 50 OR MORE PERSONS AND ANY HAZARDOUS OR GROUP H OCCUPANCY.

6. EXIT DOORWAYS SHALL NOT BE LESS THAN 36" IN WIDTH AND NOT LESS THAN 6'-8" IN HEIGHT. PROJECTIONS INCLUDING PANIC HARDWARE, SHALL NOT REDUCE THE OPENING TO LESS THAN 2'-8" CLEAR WIDTH.

7. EXIT DOOR LEAF SHALL NOT EXCEED 4 FEET IN WIDTH AND SHALL SWING IN THE DIRECTION OF EXIT TRAVEL WHEN SERVING MORE THAN 50 PERSONS.

8. DOORS OTHER THAN EXIT DOORS TO BE A MINIMUM OF 2'-8" CLEAR OPENING WIDTH. DOORS ARE TO BE OPENABLE WITH A SINGLE EFFORT

9. DOOR HARDWARE TO BE LEVER-TYPE IN ACCORDANCE WITH CITY AND STATE ACCESSIBILITY REQUIREMENTS. (TITLE 24)

10. EVERY EXIT DOOR SHALL BE OPENABLE FROM THE INSIDE WITHOUT THE USE OF A KEY, TOOL. OR SPECIAL KNOWLEDGE OR EFFORT. SPECIAL LOCKING DEVICES SHALL BE AN APPROVED TYPE.

11. PANIC HARDWARE SHALL BE PROVIDE ON EXIT DOORS SERVING ROOMS, CORRIDORS, OR STAIRWAYS HANDLING A OCCUPANT OF 50 OR MORE PERSONS, FROM ANY GROUP A, E, OR I OCCUPANCY, AND 10 OR MORE PERSONS FOR MOTION PICTURE THEATERS.

12. ONLY PANIC HARDWARE APPROVED BY THE STATE FIRE MARSHALL SHALL BE INSTALLED. AIS

GENERAL NOTES

NOTES ON STRUCTURAL, ELECTRICAL, MECHANICAL AND PLUMBING PLANS ARE IN ADDITION TO THE FOLLOWING NOTES. IF CONFLICTING NOTES ARE FOUND, THE CONTRACTOR SHALL BRING SUCH DISCREPANCY TO THE ATTENTION OF THE ARCHITECT AND RELEVANT CONSULTANTS.

DIVISION 01 - GENERAL REQUIREMENTS

THE CONTRACTOR AND ANY TIER SUBCONTRACTOR SPECIFICALLY REPRESENTS AND WARRANTS TO THE OWNER THAT THE CONTRACT DOCUMENTS ARE SUFFICIENT TO PERMIT CONTRACTOR AND ITS SUBCONTRACTOR(S) TO ESTABLISH THE CONTRACT SUM, TO PREPARE ANY REQUIRED SHOP DRAWINGS, AND TO PERFORM THE WORK. THE CONTRACT DOCUMENTS ARE COMPLEMENTARY, AND WHAT IS REQUIRED BY EACH SHEET, PLAN, ELEVATION, SECTION, INTERIOR ELEVATION, DETAIL, CONSULTANTS' INFORMATION AND SPECIFICATION BOOK CONTENT SHALL BE BINDING TO EACH OTHER AND AS IF REQUIRED BY ALL. THE CONTRACTOR (AND ANY TIER SUBCONTRACTOR UPON EXECUTION OF ANY SUBCONTRACT) FURTHER ACKNOWLEDGES AND DECLARES THAT IT HAS VISITED AND EXAMINED THE SITE, EXAMINED ALL PHYSICAL, LEGAL AND OTHER CONDITIONS AFFECTING THE WORK AND IS FULLY FAMILIAR WITH ALL OF THE CONDITIONS THEREON AND THEREUNDER AFFECTING THE SAME. IN CONNECTION THEREWITH, CONTRACTOR (AND ANY TIER SUBCONTRACTOR UPON EXECUTION OF ANY SUBCONTRACT), SPECIFICALLY REPRESENTS AND WARRANTS TO OWNER THAT IT HAS, BY CAREFUL EXAMINATION, SATISFIED ITSELF AS TO AND SHALL NOT BE ENTITLED TO ANY INCREASE IN THE CONTRACT SUM OR CONTRACT TIME ON THE BASIS OF: (1) THE NATURE, LOCATION, AND CHARACTER OF THE PROJECT AND THE SITE, INCLUDING, WITHOUT LIMITATION, THE SURFACE CONDITIONS OF THE SITE AND ALL STRUCTURES AND OBSTRUCTIONS THEREON AND THEREUNDER, BOTH NATURAL AND MAN-MADE, ALL SURFACE AND SUBSURFACE WATER CONDITIONS OF THE SITE AND THE SURROUNDING AREA; (2) THE NATURE, LOCATION, AND CHARACTER OF THE GENERAL AREA IN WHICH THE PROJECT IS LOCATED, INCLUDING, WITHOUT LIMITATION, ITS CLIMATIC CONDITIONS, AVAILABLE LABOR SUPPLY AND LABOR COST, LOCATION OF STAGING AND LAYDOWN AREAS, PARKING, CONSTRUCTION ACTIVITY ADJACENT TO THE PROJECT, AND AVAILABLE EQUIPMENT SUPPLY AND EQUIPMENT COSTS; (3) THE QUALITY AND QUANTITY OF ALL MATERIALS, SUPPLIES, TOOLS, EQUIPMENT, LABOR, AND PROFESSIONAL SERVICES NECESSARY TO COMPLETE THE WORK IN THE MANNER AND WITHIN THE COST AND TIME FRAME REQUIRED BY THE CONTRACT DOCUMENTS; AND (4) ANY APPLICABLE FEDERAL, STATE AND LOCAL LAWS, ORDINANCES, RULES, REGULATIONS OR ORDERS, INCLUDING, WITHOUT LIMITATION, INSPECTION PROCEDURES AND TIMING.

1A. THE GENERAL NATURE OF THESE NOTES SHALL IN NO WAY DIMINISH THE CONTRACTOR AND SUB-CONTRACTORS FROM COMPLETING ALL WORK IN STRICT CONFORMANCE WITH ALL ASPECTS OF APPLICABLE BUILDING CODES AND WITH OTHER RULES, REGULATIONS AND ORDINANCES GOVERNING THE PLACE OF THE BUILDING. EACH SUB-CONTRACTOR SHALL BECOME FAMILIAR WITH ANY PART OF THE AFOREMENTIONED BUILDING CODES, RULES, ETC. THAT MAY AFFECT HIS WORK. IN THE EVENT THE FOLLOWING CONSTRUCTION DOCUMENTS HAVE NOT INCLUDED DETAILS PERTAINING TO SPECIFIC CONDITIONS, BY ACCEPTING THE CONTRACT, THE CONTRACTOR AND SUBCONTRACTORS AGREE TO INCORPORATE AND BUILD TO THE PREVAILING BUILDING CODES, REGULATIONS AND INDUSTRY STANDARDS.

1B. THE FINAL SPECIFICATIONS MANUAL SHALL BE INCLUDED AS PART OF THE GENERAL CONTRACTOR'S CONTRACT. BY ACCEPTING THIS CONSTRUCTION SET AND THE FINAL SPECIFICATIONS MANUAL, THE CONTRACTOR AGREES THAT ALL INFORMATION CONTAINED IN ONE PAGE SHALL BE INCORPORATED AND COORDINATED WITH INFORMATION CONTAINED ON EACH OF THE OTHER PAGES IN THE CONSTRUCTION SET AND FINAL SPECIFICATIONS MANUAL. THE GENERAL CONTRACTOR IS RESPONSIBLE FOR DISTRIBUTING ALL DOCUMENTS AND INFORMATION AVAILABLE TO ALL SUB-CONTRACTORS. IT IS THE RESPONSIBILITY OF THE GENERAL CONTRACTOR TO ENSURE THAT EACH SUB-CONTRACTOR UNDERSTANDS THE NEEDS OF THEIR TRADE WITH RESPECT TO OTHER TRADES GIVEN THE INTENT OF THE WORK AS DESCRIBED IN THE CONSTRUCTION SET AND FINAL SPECIFICATIONS MANUAL PRIOR TO SIGNING ANY CONTRACTUAL AGREEMENTS FOR THIS PROJECT.

1C. THE OWNER AND ARCHITECT SHALL BE NOTIFIED IF QUESTIONS, DISCREPANCIES OR CONFLICTS ARE FOUND DURING THE REVIEW PERIOD PRIOR TO CONSTRUCTION. ONCE UNDER CONSTRUCTION, SHOULD DISCREPANCIES ARISE BETWEEN INDIVIDUAL DRAWINGS AND/OR SPECIFICATIONS, THE CONTRACTOR SHALL PURCHASE AND/OR BUILD THE SOLUTION WHICH PROVIDES THE GREATEST DEGREE OF BUILDING INTEGRITY WITH REGARD TO SAFETY AND DURABILITY WITHOUT COST TO THE OWNER OR ARCHITECT.

1D. THE SUBCONTRACTORS MUST AGREE AS A CONDITION TO THEIR CONTRACT WITH THE GENERAL CONTRACTOR THAT THEY WILL FULLY INFORM THEMSELVES AND THEIR EMPLOYEES TO THE FULL EXTENT OF THE "CONTRACT DOCUMENTS (INCLUDING THE SPECIFICATION BOOK)" BEYOND THE INFORMATION DESCRIBING THEIR TRADE. AS AN EXAMPLE, THE FRAMER MUST REVIEW THE COMPLETE ARCHITECTURAL, MECHANICAL AND ELECTRICAL SECTION AND NOT ONLY THE STRUCTURAL SECTION. THE INTENT OF THIS REQUIREMENT IS TO PREVENT CRITICAL INFORMATION IN ALL SECTIONS TO BE RECOGNIZED AND MADE RESPONSIBLE BY AND TO ALL SUBCONTRACTORS. IF AT ANY TIME THE GENERAL CONTRACTOR IS MADE AWARE OR INFORMED OF ANY CONFLICTS BETWEEN THE SPECIFICATION BOOK AND THE CONSTRUCTION DOCUMENTS, IT IS THE OBLIGATION OF THE GENERAL CONTRACTOR TO INFORM THE ARCHITECT IN WRITING PRIOR TO ANY WORK PERFORMED.

2. SCOPE OF PERMIT

A. LIMIT OF AUTHORIZATION. THE ISSUANCE OF A PERMIT IS NOT AN APPROVAL OR AN AUTHORIZATION OF THE WORK SPECIFIED THEREIN. A PERMIT IS MERELY AN APPLICATION FOR INSPECTION, THE ISSUANCE OF WHICH ENTITLES THE PERMITTEE TO INSPECTION OF THE WORK, WHICH IS DESCRIBED THEREIN. PERMITS ISSUED UNDER THE REQUIREMENTS OF THIS CODE SHALL NOT RELIEVE THE OWNER OF RESPONSIBILITY FOR SECURING REQUIRED PERMITS FOR WORK TO BE DONE WHICH IS REGULATED BY ANY OTHER CODE, DEPARTMENT OR DIVISION OF THE CITY IN WHICH THE WORK IS PERFORMED.

B. VALIDITY OF OTHER LAWS. NEITHER ISSUANCE OF A PERMIT NOR THE APPROVAL OF THE BUILDING DEPARTMENT OF ANY DOCUMENT SHALL CONSTITUTE AN APPROVAL OF ANY VIOLATION OF ANY PROVISION OF THIS CODE OR OF ANY OTHER LAW OR ORDINANCE, AND A PERMIT OR OTHER DOCUMENT PURPORTING TO GIVE AUTHORITY TO VIOLATE ANY LAW SHALL NOT BE VALID WITH RESPECT THERETO.

3. ALL WORK, CONSTRUCTION AND MATERIALS SHALL COMPLY WITH ALL PROVISIONS OF THE CURRENT EDITION OF THE GOVERNING BUILDING CODE AND WITH OTHER RULES, REGULATIONS, AND ORDINANCES GOVERNING THE PLACE OF THE BUILDING. BUILDING CODE REQUIREMENTS TAKE PRECEDENCE OVER THE DRAWINGS AND IT SHALL BE THE RESPONSIBILITY OF ANYONE SUPPLYING LABOR, MATERIAL OR BOTH TO INSTALL HIS WORK IN CONFORMANCE WITH THE BUILDING CODE AND TO BRING TO THE ATTENTION OF THE ARCHITECT ANY DISCREPANCIES OR CONFLICTS BETWEEN THE REQUIREMENTS OF THE BUILDING CODE AND THE DRAWINGS. THE ABOVE SHALL APPLY TO ALL DIVISIONS.

4. DIMENSION & CONDITIONS AT THE JOB SITE SHALL BE VERIFIED BY THE CONTRACTOR(S). DISCREPANCIES IN THE DRAWINGS OR BETWEEN THE DRAWINGS AND ACTUAL FIELD CONDITIONS SHALL BE REPORTED TO THE ARCHITECT IN WRITING AND DRAWING FORM. CORRECTED DRAWINGS AND/OR INSTRUCTIONS SHALL BE ISSUED BY THE ARCHITECT PRIOR TO THE INSTALLATION OF ANY WORK.

5. SCAFFOLDING OR FALSEWORK: THE CONSTRUCTION AND DEMOLITION OF ANY BUILDING, STRUCTURE, SCAFFOLDING OR FALSE WORK MORE THAN 3 STORIES OR 36' IN HEIGHT, REQUIRES A PERMIT PRIOR TO THE ISSUANCE OF A BUILDING PERMIT.

6. CONSTRUCTION SAFETY:

A. ALL WORK SHALL CONFORM TO THE REQUIREMENTS OF LOCAL CODE.

B. PEDESTRIAN PROTECTION SHALL CONFORM TO THE REQUIREMENTS OF THE CALIFORNIA BUILDING CODE.

7. TEMPORARY TOILET: MAINTAIN SANITARY TOILET FACILITIES DURING CONSTRUCTION.

8. SITE COORDINATION: CONTRACTOR TO COORDINATE TRADES & EXISTING CONDITIONS WITH INSTALLATION & OPERATION FOR EACH SYSTEM.

9. STAIRS

A. ALL STAIRS SHALL CONFORM TO THE LOCAL BUILDING CODE.

B. PRIOR TO INSTALLATION OF ANY STAIR, THE CONTRACTOR SHALL VERIFY THE RISE, RUN, HEADROOM AND THE NUMBERS OF TREADS AND RISERS, AND SHALL NOTIFY THE ARCHITECT OF ANY DISCREPANCIES BETWEEN THE DRAWING AND THE ACTUAL FIELD CONDITIONS IN WRITING. SEE 'DIMENSIONS AND CONDITIONS' ABOVE.

10. GUARDRAILS: ALL UNENCLOSED FLOOR AND DOOR OPENINGS, OPEN AND GLAZED SIDES OF LANDINGS AND STAIRS,BALCONIES OR PORCHES WHICH ARE MORE THAN 30" ABOVE GRADE, AND ROOFS USED FOR OTHER THAN SERVICE OF THE BUILDING SHALL BE PROTECTED BY A GUARDRAIL WITH A MINIMUM HEIGHT OF 42". OPEN GUARDRAILS AND STAIR RAILINGS SHALL HAVE INTERMEDIATE RAILS OR AN ORNAMENTAL PATTERN SUCH THAT NO OBJECT 4" IN DIAMETER CAN PASS THROUGH. GUARD RAILS SHALL BE DESIGNED FOR 50. LB/FT. LATERAL LOAD AT EXIT FACILITIES SERVING AN OCCUPANT LOAD > 50, 20.LB/FT. LATERAL LOAD ELSEWHERE. SEE STRUCTURAL CALCULATIONS AND DETAILS.

11. BATHROOMS:

A. REFER TO SECTION 092900 – GYPSUM BOARD.

B. TOILET ROOM FLOORS SHALL HAVE A SMOOTH, HARD, NON-ABSORBENT, MATERIAL SUCH AS PORTLAND CEMENT, CONCRETE, CERAMIC TILE, OR OTHER APPROVED MATERIAL WHICH EXTENDS UPWARD ONTO THE WALLS AT LEAST 5". WALLS WITHIN WATER CLOSET COMPARTMENTS AND WALLS WITHIN 2 FT. OF THE FRONT AND SIDES OF URINALS SHALL BE SIMILARLY FINISHED TO A HEIGHT OF 4 FT. MINIMUM.

C. PROVIDE TWO-HOUR CONSTRUCTION BEHIND ALL TUBS PLACED ADJACENT TO DIVISION WALLS.

D. SHOWERS: WALLS IN ALL OCCUPANCIES, SHALL BE FINISHED AS SPECIFIED IN SUBSECTION (B) ABOVE TO A HEIGHT OF 70" MINIMUM ABOVE THE DRAIN INLET. SEE ALSO SECTION 092900 – GYPSUM BOARD.

E. GLAZING AT SHOWERS AND TUBS: GLAZING USED IN DOORS AND PANELS OF SHOWER AND BATHTUB ENCLOSURES SHALL BE FULLY TEMPERED / LAMINATED SAFETY GLASS OR APPROVED PLASTIC.

12. CEILING PROJECTIONS: THERE WILL BE NO PROJECTIONS, (LIGHT FIXTURES, ETC.) BELOW THE 7'-0" HIGH CEILINGS AT HALLWAYS, CLOSETS, KITCHENS, ETC. IF PROJECTIONS SUCH AS LIGHT FIXTURES ARE BELOW 7'-0" THEN THEY MUST PROJECT NO MORE THAN 4" FROM THE FINISH SURFACE.

13. TRASH ENCLOSURES: SHALL BE OF NON-COMBUSTIBLE CONSTRUCTION.

THE FOLLOWING SPECIFICATIONS SHALL APPLY UNLESS SHOWN OTHERWISE ON THE DRAWINGS:

14. OPENINGS:

A. FLOOR - CEILING OR ROOF - CEILING OPENINGS.

B. OPENINGS IN WALLS AND PARTITIONS SHALL BE PROTECTED. WHERE FIRE-RATED WALLS AND PARTITIONS REQUIRE PROTECTED OPENINGS, THE FOLLOWING PENETRATIONS INTO OR THROUGH SUCH CONSTRUCTION ARE PERMITTED:

1) COPPER OR FERROUS PIPES OR CONDUITS MAY PENETRATE WALLS OR PARTITIONS, IF FIRE STOPPED AS REQUIRED BY THE BUILDING CODE.

2) STEEL ELECTRICAL OUTLET BOXES NOT EXCEEDING 16 SQ. IN. IN AREA, PROVIDED THAT THE AREA OF SUCH OPENINGS DOES NOT AGGREGATE MORE THAN 100 SQ. IN. FOR ANY 100SQ.FT. OF WALL OR PARTITION AREA. OUTLET BOXES ON OPPOSITE SIDES OF WALLS OR PARTITIONS SHALL BE SEPARATED BY A HORIZONTAL DISTANCE OF 24". THE SPACE BETWEEN THE PENETRATING MATERIALS DESCRIBED IN ITEMS 1 & 2 MOVEMENT OF FLAMES AND GASES.

C. FLOORS: BUILDING PAPER SHALL BE LAID BETWEEN SUBFLOOR AND FINISHED FLOOR.

D. WALLS: 5/8" APPROVED TYPE "X" GYPSUM WALLBOARD FASTENED METAL STUDS PER BUILDING CODE; JOINTS CEMENTED, TAPED, SANDED, PRIMED AND PAINTED.

E. CEILINGS: ANY ASSEMBLY SPECIFIED PER LOCAL BUILDING CODE

16. PARTS OR PORTIONS OF STRUCTURES, NON-STRUCTURAL COMPONENTS AND THEIR ANCHORAGE TO THE MAIN STRUCTURAL SYSTEM SHALL BE DESIGNED FOR LATERAL FORCES.

DIVISION 02 – EXISTING CONDITIONS

1. EXISTING CONDITIONS: ALL DEBRIS, MISCELLANEOUS FORMWORK, OR OTHER REMNANT FROM PREVIOUS CONSTRUCTION OR DEMOLITION IS TO BE REMOVED FROM THE SITE PRIOR TO COMMENCING NEW WORK. THIS WORK IS DEEMED TO BE INCLUDED IN THE SCOPE OF WORK SET FORTH IN THESE DOCUMENTS.

DIVISION 6 – WOOD, PLASTICS, AND COMPOSITES

1. GENERAL: ALL REQUIREMENTS OF THE LOCAL BUILDING CODE SHALL BE MET.

2. FIRE STOPS FOR STUD WALLS AND PARTITIONS: ENCLOSED SPACES IN STUD WALLS, PARTITIONS AND FURRED WALLS SHALL BE FIRE-STOPPED AT THE TOP AND BOTTOM AND ALSO AT THE MID-POINT IN WALLS MORE THAN 10 FEET HIGH. THE DISTANCE BETWEEN FIRE-STOPS IN WALLS AND PARTITIONS SHALL NOT EXCEED 10 FEET MEASURED HORIZONTALLY OR VERTICALLY. TOP AND BOTTOM PLATES WHICH FILL ALL SPACES BETWEEN STUDS AND FURRING SHALL BE CONSIDERED FIRE-STOPS.

3. NOTCHING & BORING: AT EXTERIOR WALLS AND BEARING WALLS STUDS SHALL NOT BE NOTCHED MORE THEN 25 % WIDTH OF STUD: AT NON-BEARING PARTITIONS NOT MORE THAN 40% WIDTH OF STUDS. BORED HOLES: MAX DIAMETER 40% ANY STUD AND 60% NON-BEARING STUD PARTITIONS OR IN ANY WALL WHERE EACH BORED STUD IS DOUBLED, PROVIDED NOT MORE THEN 2 SUCH SUCCESSIVE DOUBLED STUDS ARE SO BORED: NO BORED HOLE CLOSER THEN 5 / 8" TO EDGE OF STUD. VERIFY WITH STRUCTURAL DRAWINGS. (SEE DIVISION 22, PLUMBING NOTES WITHIN THESE GENERAL NOTES)

4. PENETRATIONS: PENETRATIONS IN WALLS REQUIRING PROTECTED OPENINGS SHALL BE FIRE-STOPPED. FIRESTOPPING SHALL BE AN APPROVED MATERIAL SECURELY INSTALLED AND CAPABLE OF MAINTAINING ITS INTEGRITY WHEN SUBJECTED TO TEST TEMPERATURES PRESCRIBED IN THE CALIFORNIA BUILDING CODE FOR THE SPECIFIC WALL OR PARTITION.

5. PROVIDE DRAFT STOPS FOR FLOOR-CEILING ASSEMBLIES. DRAFT STOPS ARE REQUIRED ABOVE AND IN LINE WITH WALLS SEPARATING TENANT SPACES FROM EACH OTHER AND FROM OTHER USES.

DIVISION 7 - THERMAL & MOISTURE PROTECTION

1. ENERGY INSULATION

A. ALL NEW EXTERIOR WALLS SHALL BE INSULATED WITH BLANKET-TYPE MINERAL FIBER OR GLASS FIBER INSULATION CONFORMING TO FEDERAL SPECIFICATION HH-1-521E WITH THERMAL RESISTANCE (R) CONFORMING TO THE VALUES SPECIFIED IN THE TITLE 24 REPORTS BUT NOT LESS THAN 13. BATTS SHALL BE KRAFT PAPER FACED.

B. ALL ROOF INSULATION SHALL BE INSULATED WITH BATT OR RIGID INSULATION (SEE DWGS FOR LOCATION) WITH A THERMAL RESISTANCE (R) CONFORMING TO THE VALUES SPECIFIED IN THE TITLE 24 REPORTS BUT NOT LESS THAN 30.

C. ALL SLIDING GLASS DOORS AND WINDOWS SHALL BE CERTIFIED AND LABELED TO SHOW CONFORMANCE WITH CURRENT AIR INFILTRATION STANDARDS OF THE AMERICAN NATIONAL STANDARDS INSTITUTE (ANSI 134.1, ANSI 134.3, AND ANSI 134.4) WHEN TESTED IN ACCORDANCE WITH ASTM 283-7 WITH A PRESSURE DIFFERENTIAL OF 1.57 LB/SQ. FT.

D. REQUIRED TINTING AND GLAZING SHALL BE PERMANENTLY TINTED OR PERMANENTLY SURFACE-COATED BY THE MANUFACTURER OF THE GLAZING MATERIAL.

E. ALL RETURN PIPING AND ALL CONTINUOUSLY CIRCULATING DOMESTIC OR HEATING HOT WATER PIPING SHALL BE INSULATED AS REQUIRED BY THE PLUMBING DIVISION.

F. A CERTIFICATE OF COMPLIANCE SIGNED BY THE INSULATION CONTRACTOR AND GENERAL CONTRACTOR SHALL BE PROMINENTLY POSTED ON THE SITE. BLANK CERTIFICATES CAN BE OBTAINED AT ALL BUILDING DEPARTMENT OFFICES.

F. ALL GLAZING AND INSULATION SHALL CONFORM TO THE STATE INSULATION STANDARDS.

2. BELOW GRADE WATER-PROOFING: REQUIRED AT ALL WALLS BELOW GRADE THAT ENCLOSE USABLE SPACE AND BASEMENT FLOOR SLAB.

3. ROOF DRAINAGE: MINIMUM ROOF SLOPE SHALL BE 1/4" VERTICAL FOR EVERY 1'- 0" HORIZONTAL. PER SECTION 1101.11.2.2 OF THE CALIFORNIA PLUMBING CODE, THE MAXIMUM HEIGHT OF THE ROOF DRAINS SHALL BE A HEIGHT TO PREVENT THE DEPTH OF PONDING WATER FROM EXCEEDING THAT FOR WHICH THE ROOF WAS DESIGN AS DETERMINED BY SECTION 1101.11.1. IF SECONDARY DRAINS ARE NOT PRESENT ON THE DRAWINGS, CONTRACTOR SHALL NOTIFY THE ARCHITECT, STRUCTURAL ENGINEER AND PLUMBING ENGINEER PRIOR TO COMMENCING RELATED PLUMBING WORK.

DIVISION 8 - OPENINGS

1. GLAZING:

A. GLASS THICKNESS, STRENGTH, MATERIALS AND METHOD OF INSTALLATION SHALL CONFORM WITH REQUIREMENTS OF LOCAL BUILDING CODES.

B. GLASS AND GLAZING IN LOCATIONS WHICH MAY BE SUBJECT TO HUMAN IMPACT SUCH AS FRAMELESS GLASS DOORS, GLASS PANELS, GLASS EXIT AND ENTRANCE DOORS, SLIDING GLASS DOORS, SHOWER DOORS, TUB ENCLOSURES, AND STORM DOORS SHALL MEET THE REQUIREMENTS SET FORTH IN THE LOCAL BUILDING CODE.

C. GLASS DOORS, ADJACENT PANELS AND ALL GLAZED OPENINGS WITHIN 18" OF THE ADJACENT FLOOR, WHOSE LEAST DIMENSION IS GREATER THAN 18", SHALL BE OF GLASS APPROVED FOR IMPACT HAZARD.

D. ALL GLASS MUST COMPLY WITH U.S. CONSUMER SAFETY PROTECTION COMMISSION REQUIREMENTS.

2. SMOKE AND DRAFT CONTROL: DOORS REQUIRED TO HAVE SMOKE AND DRAFT CONTROL ASSEMBLIES SHALL BE PROVIDED WITH A GASKET SO INSTALLED AS TO PROVIDE A SEAL WHERE THE DOOR MEETS THE STOP ON BOTH SIDES AND ACROSS THE TOP.

3. SECURITY PROVISIONS: ALL OPENINGS NOTED WITH SYMBOL ARE SECURITY OPENINGS AND THE FOLLOWING NOTES SHALL APPLY: GLAZED OPENINGS SHALL CONFORM TO THE REQUIREMENTS OF SECURITY PROVISION OF LOCAL BUILDING CODE. ENTRY DOORS SHALL BE ARRANGED SO THAT THE OCCUPANT HAS A VIEW OF THE AREA IMMEDIATELY OUTSIDE THE DOOR. SUCH A VIEW MAY BE PROVIDED WITH A DOOR VIEWER.

4. SWINGING DOORS:

A. DOOR STOPS OF IN-SWINGING DOORS SEPARATING DWELLING UNITS FROM PUBLIC AREAS SHALL BE OF ONE- PIECE CONSTRUCTION WITH THE JAMB OR JOINED BY A RABBET JOINT TO THE JAMB.

B. ALL PIN-TYPES HINGES WHICH ARE ACCESSIBLE FROM OUTSIDE THE SECURED AREA WHEN THE DOOR IS CLOSED SHALL HAVE NON-REMOVABLE HINGE PINS. IN ADDITION THEY SHALL HAVE MINIMUM 1 / 4" DIAMETER STEEL JAMB STUD WITH 1 / 4" MINIMUM PROJECTION UNLESS THE HINGES ARE SHAPED TO PREVENT REMOVAL OF THE DOOR IF THE HINGE PINS ARE REMOVED.

C. THE STRIKE PLATE FOR LATCHES AND THE HOLDING DEVICE FOR PROJECTING DEADBOLTS IN WOOD CONSTRUCTION SHALL BE SECURED TO THE JAMB AND THE WALL FRAMING WITH SCREWS OF NOT LESS THAN TWO 1-1/2" LENGTH.

D. DEADBOLTS SHALL CONTAIN HARDENED INSERTS.

E. STRAIGHT DEADBOLTS SHALL HAVE A MINIMUM THROW OF 1" AND EMBEDMENT OF NOT LESS THAN 5/8" INTO THE HOLDING DEVICE RECEIVING THE PROJECTED BOLT.

F. A HOOK-SHAPED OR AN EXPANDING-LUG DEADBOLT SHALL HAVE A MINIMUM THROW OF 3 /4".

G. GLASS DOORS SHALL HAVE TEMPERED/ LAMINATED GLAZING FULLY COMPLYING WITH THE LOCAL BUILDING CODE.

H. DOORS SHALL BE PROVIDED WITH A KEY-OPERATED LOCKS ON THE EXTERIOR AND SHALL BE OPENABLE FROM THE INTERIOR WITHOUT A KEY, SPECIAL KNOWLEDGE OR SPECIAL EFFORT.

I. GLAZED OPENINGS WITHIN 40" OF THE LOCKING DEVICE OF THE DOOR OR WINDOW SHALL BE FULLY TEMPERED GLASS OR APPROVED BURGLARY RESISTANT MATERIAL, OR SHALL BE PROTECTED BY METAL BARS, SCREENS OR GRILLS HAVING A PATTERN SUCH THAT THE MAX. DIMENSION OF ANY OPENING DOES NOT EXCEED 2"

J. DOOR LOCKING DEVICES SHALL BE A TYPE THAT WILL BE READILY DISTINGUISHABLE AS LOCKED. EXIT DOORS USED IN PAIRS SHALL HAVE APPROVED AUTOMATIC FLUSH BOLTS.

K. ONE-HOUR RATED DOOR ASSEMBLIES SHALL HAVE NON-COMBUSTIBLE STILES EXTENDING THE FULL WIDTH OF THE DOOR FRAME. THE ASSEMBLY SHALL BE CAPABLE OF WITHSTANDING A MAXIMUM 450 F TEMPERATURE RISE ABOVE AMBIENT TEMPERATURE AFTER 30 MINUTES OF FIRE TEST.

L. THE DOOR KNOB AND THE THUMB TURN WHICH OPERATES THE DEADBOLT SHALL NOT BE SEPARATED BY MORE THAN 8".

5. CYLINDER GUARDS: SHALL BE INSTALLED ON ALL CYLINDER LOCKS WHENEVER THE CYLINDER PROJECTS BEYOND THE FACE OF THE DOOR OR IS OTHERWISE ACCESSIBLE TO GRIPPING TOOLS.

6. SCREENS, BARRICADES, AND FENCES: SHALL BE CONSTRUCTED OF MATERIAL WHICH PRECLUDE HUMAN CLIMBING AND SHALL BE PROVIDED AT EVERY PORTION OF EVERY ROOF, BALCONY, OR SIMILAR SURFACE WHICH IS WITHIN 8' OF A UTILITY POLE OR SIMILAR STRUCTURE.

7. SLIDING GLASS DOORS/ WINDOWS:

A. SHALL BE EQUIPPED WITH LOCKING DEVICES AND SHALL BE SO CONSTRUCTED AND INSTALLED THAT THEY MAY REMAIN INTACT AND ENGAGED WHEN SUBJECTED TO THE TESTS SPECIFIED IN THE LOCAL BUILDING CODE.

B. SHALL BE PROVIDED WITH A DEVICE IN THE UPPER CHANNEL OF THE MOVING PANEL TO PROHIBIT RAISING AND REMOVING THE MOVING PANEL FROM ITS TRACK, IN THE CLOSED OR PARTIALLY OPEN POSITION.

8. METAL OR WOODEN OVERHEAD OR SLIDING DOORS SHALL BE SECURED WITH A CYLINDER LOCK, PADLOCK WITH A MIN. 9/32" DIAMETER HARDENED STEEL SHACKLE AND BOLTED, HARDENED STEEL HASPS, METAL SLIDE BOARD, BOLT OR EQUIVALENT DEVICE UNLESS SECURED ELECTRICALLY OPERATED.

9. LOUVERED WINDOWS: SHALL BE PROTECTED BY METAL BARS OR GRILLS WITH OPENINGS THAT HAVE AT LEAST ONE DIMENSION OF 6" OR LESS, WHICH ARE CONSTRUCTED TO PRECLUDE HUMAN ENTRY. LOCKING DEVICES SHALL BE LOCATED AT THE INSIDE OF THE ADJACENT ROOM AT LEAST 24" FROM THE OPENING.

10. OTHER OPENABLE WINDOWS SHALL BE PROVIDED WITH SUBSTANTIAL LOCKING DEVICES.

11. ACRYLIC/ PLASTIC SKYLIGHTS: SYSTEMS SHALL CONFORM TO THE UNIFORM BUILDING CODE SECTION 2603.7.1

12. PROVIDE 32" WIDE DOORS TO ALL INTERIOR ACCESSIBLE ROOMS (6304.1)

DIVISION 9 - FINISHES

1. INTERIOR FINISHES SHALL COMPLY WITH THE FLAME SPREAD AND SMOKE DENSITY REQUIREMENTS OF THE LOCAL BUILDING CODE. SEE FIRE GENERAL NOTES.

2. PLASTERED SURFACES: ON WALLS, CEILINGS, AND ROOF SOFFITS EXPOSED TO WEATHER SHALL HAVE EXTERIOR LATH AND PLASTER.

3. LATH AND WALLBOARD: IN-PLACE INSPECTION IS REQUIRED FOR ALL INTERIOR AND EXTERIOR LATH AND/OR WALLBOARD BEFORE ANY PLASTERING IS APPLIED OR ANY JOINTS AND FASTENERS HAVE BEEN TAPED AND FINISHED.

4. DRYWALL:

A. DRYWALL SHALL CONFORM TO LOCAL BUILDING CODES.

B. DRYWALL LOCATED BEHIND REQUIRED NON-ABSORBENT SURFACES SHALL BE WATER-RESISTANT.

C. ALL DRYWALL SURFACES SHALL BE TAPED, PATCHED, SANDED, PRIMED, AND PAINTED (COLOR BY ARCHITECT) UNLESS NOTED OTHERWISE.

D. PROVIDE CORNER BEAD AND J-MOLD AT ALL EXPOSED DRYWALL EDGES AND TERMINATIONS.

DIVISION 13 - SPECIAL CONSTRUCTION

1. SOUND TRANSMISSION CONTROL: REFER TO STATE NOISE INSULATION STANDARDS FOR SOUND RATED PARTITIONS AND IMPACTED RATED FLOOR/CEILING ASSEMBLIES.

A. WALLS: SHALL HAVE AIRBORNE SOUND CONTROL WITH MINIMUM STC RATING OF 50.

B. FLOORS/CEILINGS: SHALL HAVE AIRBORNE SOUND CONTROL WITH MINIMUM STC RATING OF 50 AND IMPACT SOUND CONTROL WITH MINIMUM LLC RATING OF 50.

2. ADDITIONAL REQUIREMENTS:

A. AN APPROVED PERMANENT AND RESILIENT ACOUSTICAL SEALANT SHALL BE PROVIDED ALONG THE JOINT BETWEEN THE FLOOR AND THE SEPARATION WALLS.

B. ALL PENETRATIONS INTO SOUND RATED PARTITIONS OR FLOOR/CEILING ASSEMBLIES WILL BE SEALED WITH APPROVED RESILIENT SEALANT.

C. ALL RIGID CONDUIT, DUCTS, PLUMBING PIPES AND APPLIANCE VENTS LOCATED IN SOUND ASSEMBLIES WILL BE ISOLATED FROM THE BUILDING CONSTRUCTION BY MEANS OF RESILIENT SLEEVES, MOUNTS OR MINIMUM 1/4" THICK APPROVED RESILIENT MATERIAL. (EXCEPTION: GAS PIPING NEED NOT BE ISOLATED).

D. METAL VENTILATING AND CONDITIONED AIR DUCTS LOCATED IN SOUND ASSEMBLIES SHALL BE LINED. (EXCEPTION: DUCTS SERVING ONLY KITCHEN COOKING FACILITIES, AND BATHROOMS NEED NOT BE LINED.)

E. WALL MOUNTED LAVATORIES AND TOILETS ARE NOT PERMITTED ON SOUND RATED PARTITIONS.

F. COMBUSTION AIR, KITCHEN AND BATHROOM EXHAUST DUCTS WITHIN SOUND-SEPARATION ASSEMBLIES SHALL BE WRAPPED WITH APPROVED INSULATION.

3. ELECTRICAL REQUIREMENTS:

A. OUTLET BOXES MAY BE INSTALLED IN THE SOUND RATED WALLS AND CEILINGS AS FOLLOWS:

1) BOXES WHICH PENETRATE THE WALL IN ONE AREA OR OCCUPANCY SHALL NOT BE INSTALLED IN THE SAME SPACE BETWEEN STUDS CONTAINING A BOX WHICH PENETRATES INTO ANOTHER AREA OR OCCUPANCY.

2) THERE SHALL BE ONE SOLID STUD BETWEEN OUTLET BOXES AND MINIMUM 24" SEPARATION FROM CENTER TO CENTER.

3) OUTLET BOXES SHALL HAVE A DEPTH OF NOT MORE THEN 1-1/2", SO AS TO ALLOW THE REQUIRED 2" UNCOMPRESSED INSULATION TO BE INSTALLED IN A STANDARD 2" X 4" WALL. ON WALLS OF DEEPER DIMENSIONS, BOXES OF GREATER DEPTH MAY BE USED.

4) BACK AND SIDES OF BOXES SHALL BE SEALED WITH 1/8" RESILIENT SEALANT AND BACKED WITH 2" MINIMUM MINERAL FIBER INSULATION (TV, TELEPHONE AND INTERCOM OUTLETS MUST BE INSTALLED IN BOXES ACCORDINGLY).

5) CONDUITS OR RACEWAYS (STUBOUTS) MAY PENETRATE THE SOUND RATED WALLS OR CEILINGS, PROVIDED THE CONDUIT IS COVERED AT THE PENETRATION POINT WITH A PERMANENTLY RESILIENT SEALANT.

6) THE REQUIREMENTS FOR OUTLET BOXES INSTALLED FOR TELEVISIONS, TELEPHONES AND THERMOSTATS (ELECTRICAL AND PNEUMATIC) SHALL BE THE SAME AS FOR RECEPTACLES OR SWITCHES. PLASTER RINGS, OPEN BACK BOXES, OR MOUNTING PLATES SHALL NOT BE PERMITTED.

7) WHERE METALLIC RACEWAYS MATERIAL (RIGID METAL CONDUIT, STEEL TUBE) IS INSTALLED IN SOUND RATED FLOOR JOIST WITH A RESILIENT MATERIAL AT THE POINTS OF SUPPORT. AT THE POINT WHERE THE RACEWAYS PASS THROUGH HOLES OR NOTCHES, CARE SHOULD BE TAKEN TO INSURE THAT THE RACEWAY DOES NOT TOUCH THE SURFACE OF THE JOISTS. THE RESILIENT MATERIAL USED MAY BE RUBBER, CARPET PADDING, OR OTHER APPROVED MATERIAL.

8) WHEN RIGID METALLIC RACEWAY IS INSTALLED IN THE FLOOR-CEILING SPACES, THE SPACE SHALL HAVE A MINIMUM OF 2" OF MINERAL INSULATION BELOW. CARE SHOULD BE TAKEN DURING INSTALLATION OF THE RACEWAY TO ALLOW FOR THIS 2" OF NONCOMPR

FIRE GENERAL NOTES:

OPENINGS
1. FIRE BLOCKING MUST BE PROVIDED IN ACCORDANCE WITH SECTION 708.2.1 IN OPENINGS AROUND VENTS, PIPES, DUCTS, CHIMNEYS, FIREPLACES AND SIMILAR OPENINGS WHICH AFFORD A PASSAGE FOR FIRE AT CEILING AND FLOOR LEVELS, WITH NONCOMBUSTIBLE MATERIALS.

ADDITIONAL NOTES: CONSTRUCTION PHASE
1. GRADING AND OTHER CONSTRUCTION ACTIVITIES SHALL BE LIMITED TO THE HOURS OF 8:00 AM TO 6:00 PM, MONDAY THROUGH FRIDAY, AND SHALL BE LIMITED TO INTERIOR CONSTRUCTION DURING THE SAME HOURS ON SATURDAY. NO CONSTRUCTION ACTIVITY SHALL BE PERMITTED ON SUNDAYS AND CITY OR NATIONAL HOLIDAYS. THE USE OF HEAVY EQUIPMENT SHALL BE RESTRICTED TO THE HOURS OF 8:00 AM TO 6:00 PM MONDAY THROUGH FRIDAY. TRUCKS AND OTHER HEAVY EQUIPMENT AND VEHICLES SHALL NOT ARRIVE BEFORE 8:00 AM. WORKERS FOR THE PROJECT SHALL NOT ARRIVE AT THE SITE PRIOR TO 7:45 AM ON ANY WORKING DAY. ALL CONSTRUCTION EQUIPMENT AND MATERIALS SHALL BE STORED ON SITE.

DESIGN BUILD NOTES:

THE CONTRACTOR SHALL PROVIDE PROFESSIONAL DESIGN-BUILD SERVICES FOR ITEMS INDICATED ON THE CONTRACT DOCUMENTS. THE CONTRACTOR SHALL CAUSE SUCH SERVICES OR CERTIFICATIONS TO BE PROVIDED BY A PROPERLY LICENSED DESIGN PROFESSIONAL, WHOSE SIGNATURE AND SEAL SHALL APPEAR ON ALL DRAWINGS, CALCULATIONS, SPECIFICATIONS, CERTIFICATIONS, SHOP DRAWINGS AND OTHER SUBMITTALS PREPARED BY SUCH PROFESSIONAL. DRAWINGS AND OTHER SUBMITTALS RELATED TO THE WORK DESIGNED OR CERTIFIED BY SUCH PROFESSIONAL, IF PREPARED BY OTHERS, SHALL BEAR SUCH PROFESSIONAL'S WRITTEN APPROVAL WHEN SUBMITTED TO THE ARCHITECT. THE OWNER AND THE ARCHITECT SHALL BE ENTITLED TO RELY UPON THE ADEQUACY, ACCURACY AND COMPLETENESS OF THE SERVICES, CERTIFICATIONS AND APPROVALS PERFORMED OR PROVIDED BY SUCH DESIGN PROFESSIONALS, PROVIDED THE OWNER AND ARCHITECT HAVE SPECIFIED TO THE CONTRACTOR ALL PERFORMANCE AND DESIGN CRITERIA THAT SUCH SERVICES MUST SATISFY. THE ARCHITECT WILL REVIEW, APPROVE OR TAKE OTHER APPROPRIATE ACTION ON SUBMITTALS ONLY FOR THE LIMITED PURPOSE OF CHECKING FOR CONFORMANCE WITH INFORMATION GIVEN AND THE DESIGN CONCEPT EXPRESSED IN THE CONTRACT DOCUMENTS.

FIREPLACES & FIRE FEATURES:
THE FOLLOWING NOTES APPLY TO ALL FIREPLACES AND FIRE FEATURES INDICATED ON PLANS AS DESIGN-BUILD.

ALL UNLISTED GAS FIRE APPLIANCES, FIREPLACES AND FIRE FEATURES SHALL BE TESTED, CERTIFIED AND FIELD INSPECTED BY A THIRD PARTY ORGANIZATION ACCREDITED BY ANSI (AMERICAN NATIONAL STANDARDS INSTITUTE). ONE SUCH RECOMMENDED ORGANIZATION IS CSA INTERNATIONAL WHICH IS RECOGNIZED BY THE CITY OF LOS ANGELES BUILDING AND FIRE OFFICIALS. MORE INFORMATION ON CSA INTERNATIONAL CAN BE FOUND AT WWW.CSA-INTERNATIONAL.ORG

THE CONTRACTOR SHALL PRODUCE DESIGN AND CONSTRUCTION DOCUMENTS FOR EVALUATION BY THE THIRD PARTY ORGANIZATION FOR GENERAL COMPLIANCE WITH THE NATIONALLY RECOGNIZED STANDARDS INCLUDING:
- ANSI Z21.50 STANDARD FOR DECORATIVE GAS APPLIANCES
- NFPA 54 NATIONAL FUEL GAS CODE
- THE INTERNATIONAL FUEL GAS CODE
- THE INTERNATIONAL PLUMBING CODE
- THE INTERNATIONAL MECHANICAL CODE

THE THIRD PARTY ORGANIZATION SHALL ALSO BE HIRED TO CONDUCT A PERFORMANCE TESTING PROGRAM UPON COMPLETION OF CONSTRUCTION AND INSTALLATION OF THE FIREPLACES AND FIRE FEATURES. PERFORMANCE TESTING SHALL INCLUDE, BUT NOT BE LIMITED TO, THE FOLLOWING EVALUATIONS:
- PRESSURE/LEAK TESTING OF GAS PIPING SYSTEM ADJACENT TO AND WITHIN THE APPLIANCE TO VERIFY GAS TIGHTNESS
- PILOT AND MAIN BURNER OPERATING CHARACTERISTICS TESTS.
- TEMPERATURE TESTING TO VERIFY THE APPLIANCE'S SURROUNDINGS ARE NOT EXPOSED TO EXCESSIVE TEMPERATURE RISES DUE TO THEIR PROXIMITY TO THE APPLIANCE OR ITS OPEN FLAMES.
- A COMBUSTION EVALUATION OF THE FLUE PRODUCTS FOR THEIR CO (CARBON MONOXIDE) LEVELS AND THEIR EFFECTS ON THE SURROUNDING OXYGEN LEVELS.
- PERFORMANCE EVALUATION WITH RESPECT TO WIND AND RAIN.
- FUNCTIONAL TEST OF ALL SAFETY RELATED CONTROLS.

THE THIRD PARTY ORGANIZATION SHALL ALSO EVALUATE SUPPORTING DOCUMENTS WHICH SHOULD ACCOMPANY THE APPLIANCE FOR ACCURACY AND ADEQUACY. SUPPORT DOCUMENTATION PROVIDE BY THE CONTRACTOR SHALL INCLUDE AT A MINIMUM:
- AS-BUILT DRAWINGS WHICH REFLECT THE ACTUAL APPLIANCE AND ITS INSTALLATION
- INSTRUCTIONS FOR PLACING THE APPLIANCE IN OPERATION
- INSTRUCTIONS FOR SHUTTING THE APPLIANCE DOWN.
- A DETAIL REPLACEMENT PARTS LIST.

UPON COMPLETION OF THE ABOVE ITEMS, THE THIRD PARTY ORGANIZATION SHALL PREPARE A FORMAL FIELD EVALUATION REPORT AND APPLY FOR A FIELD EVALUATION LABEL RECOMMENDING ACCEPTANCE OF THE APPLIANCE BY THE CITY OF LOS ANGELES AND OTHER LOCAL AUTHORITIES.

THE THIRD PARTY ORGANIZATION SHALL PROVIDE LABELS FOR APPROVAL BY LOCAL AUTHORITIES ONLY IF THE FOLLOWING CONDITIONS AGREED TO BY THE OWNER & GENERAL CONTRACTOR:
- THE EQUIPMENT SHALL BE USED IN A MANNER CONSISTENT WITH THE MANUFACTURER'S DESIGN AND INSTRUCTIONS. INSTRUCTIONS SHALL BE PROVIDED IN AN ACCESSIBLE LOCATION FOR MAINTENANCE AND REFERENCE.
- THE AREA SURROUNDING THE EQUIPMENT WILL BE KEPT FREE AND CLEAR FROM COMBUSTIBLE MATERIAL. ADEQUATE CLEARANCES WILL BE MAINTAINED FOR PROPER SAFETY, OPERATION AND SERVICING.
- AN INSTALLATION INSTRUCTION WILL BE LEFT TO THE HOMEOWNER TO FOLLOW INSTRUCTIONS TO MAINTAIN THE UPKEEP OF THE FIREPLACES. THE FINAL RESPONSIBILITY FOR ESTABLISHING A MAINTENANCE PROGRAM WILL REST WITH THE END USER.
- AS PARTS DETERIORATE OR CEASE TO FUNCTION PROPERLY, THEY WILL BE REPLACED OR REPAIRED. NO CHANGES TO THE DESIGN, CONSTRUCTION OR USE SHALL BE MADE WITHOUT THE WRITTEN ACKNOWLEDGEMENT AND APPROVAL OF THE SAME THIRD PARTY ORGANIZATION. ADDITIONAL TESTING MAY BE REQUIRED TO DETERMINE ACCEPTABILITY OF ANY CHANGES MADE.

CODE COMPLIANCE GENERAL NOTES:

A. THE CONSTRUCTION SHALL NOT RESTRICT A FIVE-FOOT CLEAR AND UNOBSTRUCTED ACCESS TO ANY WATER OR POWER DISTRIBUTION FACILITIES (POWER POLES, PULL-BOXES, TRANSFORMERS, VAULTS, PUMPS, VALVES, METERS, APPURTENANES, ETC.) OR TO THE LOCATION OF THE HOOK-UP. THE CONSTRUCTION SHALL NOT BE WITHIN TEN FEET OF ANY POWER LINES-WHETHER OR NOT THE LINES ARE LOCATED ON THE PROPERTY. FAILURE TO COMPLY MAY CAUSE CONSTRUCTION DELAYS AND/OR ADDITIONAL EXPENSES.
B. AN APPROVED SEISMIC GAS SHUTOFF VALVE WILL BE INSTALLED ON THE FUEL GAS LINE ON THE DOWN STREAM SIDE OF THE UTILITY METER AND BE RIGIDLY CONNECTED TO THE EXTERIOR OF THE BUILDING OR STRUCTURE CONTAINING THE FUEL GAS PIPING." (PER ORDINANCE 170,158) (SEPARATE PLUMBING PERMIT IS REQUIRED).
C. PLUMBING FIXTURES ARE REQUIRED TO BE CONNECTED TO A SANITARY SEWER OR TO AN APPROVED SEWAGE DISPOSAL SYSTEM (R306.3).
D. KITCHEN SINKS, LAVATORIES, BATHTUBS, SHOWERS, BIDETS, LAUNDRY TUBS AND WASHING MACHINE OUTLETS SHALL BE PROVIDED WITH HOT AND COLD WATER AND CONNECTED TO AN APPROVED WATER SUPPLY (R306.4).
E. BATHTUB AND SHOWER FLOORS, WALLS ABOVE BATHTUBS WITH A SHOWERHEAD, AND SHOWER COMPARTMENTS SHALL BE FINISHED WITH A NONABSORBENT SURFACE. SUCH WALL SURFACES SHALL EXTEND TO A HEIGHT OF NOT LESS THAN 6 FEET ABOVE THE FLOOR (R307.2).
F. PROVIDE ULTRA LOW FLUSH WATER CLOSETS FOR ALL NEW CONSTRUCTION. EXISTING SHOWER HEADS AND TOILETS MUST BE ADAPTED FOR LOW WATER CONSUMPTION.
G. PROVIDE 70 INCH HIGH NON-ABSORBENT WALL ADJACENT TO SHOWER AND APPROVED SHATTER-RESISTANT MATERIALS FOR SHOWER ENCLOSURE." (R308)
H. UNIT SKYLIGHTS SHALL BE LABELED BY A LA CITY APPROVED LABELING AGENCY. SUCH LABEL SHALL STATE THE APPROVED LABELING AGENCY NAME, PRODUCT DESIGNATION AND PERFORMANCE GRADE RATING (RESEARCH REPORT NOT REQUIRED)(R308.6.9).
I. WATER HEATER MUST BE STRAPPED TO WALL (SEC. 507.3, LAPC)
J. AUTOMATIC GARAGE DOOR OPENERS, IF PROVIDED, SHALL BE LISTED IN ACCORDANCE WITH UL 325.
K. PROVIDE AN ALARM FOR DOORS TO THE DWELLING THAT FORM PART OF THE POOL ENCLOSURE. THE ALARM SHALL ACTIVATE WITHIN 7 SECONDS AND SOUND CONTINUOUSLY FOR A MIN. OF 30 SECONDS WHEN THE DOOR IS OPENED. IT SHALL AUTOMATICALLY RESET AND BE EQUIPPED WITH A MANUAL MEANS TO DEACTIVATE (FOR 15 SECS. MAX.) FOR A SINGLE OPENING. THE DEACTIVATION SWITCH SHALL BE AT LEAST 54" ABOVE THE FLOOR. (6109 OF LABC) (3109.4.1.8)
L. FOR EXISTING POOL ON SITE, PROVIDE ANTI-ENTRAPMENT COVER MEETING THE CURRENT ASTM OR ASME FOR THE SUCTION OUTLETS OF THE SWIMMING POOL, TODDLER POOL AND SPA FOR SINGLE FAMILY DWELLINGS PER ASSEMBLY BILL (AB) NO. 2977. (3162B)
M. SMOKE DETECTORS SHALL BE PROVIDED FOR ALL DWELLING UNITS INTENDED FOR HUMAN OCCUPANCY, UPON THE OWNER'S APPLICATION FOR A PERMIT FOR ALTERATIONS, REPAIRS, OR ADDITIONS, EXCEEDING ONE THOUSAND DOLLARS ($1,000). (R314.6.2)
N. WHERE A PERMIT IS REQUIRED FOR ALTERATIONS, REPAIRS OR ADDITIONS EXCEEDING ONE THOUSAND DOLLARS ($1,000), EXISTING DWELLINGS OR SLEEPING UNITS THAT HAVE ATTACHED GARAGES OR FUEL-BURNING APPLIANCES SHALL BE PROVIDED WITH A CARBON MONOXIDE ALARM IN ACCORDANCE WITH SECTION R315.1 CARBON MONOXIDE ALARMS SHALL ONLY BE REQUIRED IN THE SPECIFIC DWELLING UNIT OR SLEEPING UNIT FOR WHICH THE PERMIT WAS OBTAINED. (R315.2)
O. EVERY SPACE INTENDED FOR HUMAN OCCUPANCY SHALL BE PROVIDED WITH NATURAL LIGHT BY MEANS OF EXTERIOR GLAZED OPENINGS IN ACCORDANCE WITH SECTION R303.1 OR SHALL BE PROVIDED WITH ARTIFICIAL LIGHT THAT IS ADEQUATE TO PROVIDE AN AVERAGE ILLUMINATION OF 10 FOOT-CANDLES OVER THE AREA O OF THE ROOM AT A HEIGHT OF 30 INCHES ABOVE THE FLOOR LEVEL. (R303.1)
P. A COPY OF THE EVALUATION REPORT AND/OR CONDITIONS OF LISTING SHALL BE MADE AVAILABLE AT THE JOB SITE

GARAGE/CARPORTS

1. DOORS BETWEEN GARAGE AND THE DWELLING UNIT SHALL BE SELF-CLOSING AND SELF-LATCHING, SOLID WOOD OR SOLID OR HONEYCOMB CORE STEEL NOT LESS THAN 1 3/8 INCHES THICK, OR HAVE A MINIMUM FIRE PROTECTION RATING OF 20 MINUTES. (302.5.1)
2. THE GARAGE SHALL BE SEPARATED FROM THE DWELLING AND ITS ATTIC AREA IN ACCORDANCE WITH TABLE R302.6 (R302.6).
3. DUCTS PENETRATING THE WALLS OR CEILINGS SEPARATING THE DWELLING FROM THE GARAGE SHALL BE CONSTRUCTED OF A MINIMUM NO. 26 GAGE SHEET STEEL OR OTHER APPROVED MATERIAL AND THERE SHALL BE NO OPENINGS FROM THE DUCTS INTO THE GARAGE (R302.5.2).
4. OTHER PENETRATIONS OF GARAGE/DWELLINGS CEILINGS AND WALLS SHALL BE PROTECTED AS REQUIRED BY SECTION R302.11, ITEM 4 (R302.2.3)
5. GARAGE FLOOR SURFACES SHALL BE OF AN APPROVED NONCOMBUSTIBLE MATERIAL, AND THE AREA USED TO PARK VEHICLES SHALL BE SLOPED TO A DRAIN OR TOWARD THE MAIN VEHICLE ENTRY (R309.1).

BUILDING ENVELOPE:

1. BUILDINGS SHALL HAVE APPROVED ADDRESS NUMBERS, BUILDING NUMBERS OR APPROVED BUILDING IDENTIFICATION PLACED IN A POSITION THAT IS PLAINLY LEGIBLE AND VISIBLE FROM THE STREET OR ROAD FRONTING THE PROPERTY. THESE NUMBERS SHALL CONTRAST WITH THEIR BACKGROUND. ADDRESS NUMBERS SHALL BE ARABIC NUMBERS OR ALPHABETICAL LETTERS. NUMBERS SHALL BE A MINIMUM OF 4 INCHES (102 MM) HIGH WITH A MINIMUM STROKE WIDTH OF 1/2 INCH (12.7 MM). WHERE ACCESS IS BY MEANS OF A PRIVATE ROAD AND THE BUILDING ADDRESS CANNOT BE VIEWED FROM THE PUBLIC WAY, A MONUMENT, POLE OR OTHER SIGN OR MEANS SHALL BE USED TO IDENTIFY THE STRUCTURE. (R319).
2. PROTECTION OF WOOD AND WOOD-BASED PRODUCTS FROM DECAY SHALL BE PROVIDED IN THE LOCATIONS SPECIFIED PER SECTION R317.1 BY THE USE OF NATURALLY DURABLE WOOD OR WOOD THAT IS PRESERVATIVE-TREATED IN ACCORDANCE WITH AWPA U1, TABLE 4, FOR THE SPECIES, PRODUCT, PRESERVATIVE AND END USE.
3. DAMPPROOFING, WHERE REQUIRED, SHALL BE INSTALLED WITH MATERIALS AND AS REQUIRED BY SECTION R406.1

FIRE PROTECTION

1. THE BUILDING SHALL BE EQUIPPED WITH AN AUTOMATIC RESIDENTIAL FIRE SPRINKLER SYSTEM IN ACCORDANCE WITH SECTION R313.3 OR NFPA13D. (R313, 12.21A17(D))
2. THE SPRINKLER SYSTEM SHALL BE APPROVED BY PLUMBING DIVISION PRIOR TO INSTALLATION
3. AN APPROVED SMOKE ALARM SHALL BE INSTALLED IN EACH SLEEPING ROOM & HALLWAY OR AREA GIVING ACCESS TO A SLEEPING ROOM, AND ON EACH STORY AND BASEMENT FOR DWELLINGS WITH MORE THAN ONE STORY. SMOKE ALARMS SHALL BE INTERCONNECTED SO THAT ACTUATION OF ONE ALARM WILL ACTIVATE ALL THE ALARMS WITHIN THE INDIVIDUAL DWELLING UNIT. IN NEW CONSTRUCTION SMOKE ALARMS SHALL RECEIVE THEIR PRIMARY POWER SOURCE FROM THE BUILDING WIRING AND SHALL BE EQUIPPED WITH BATTERY BACK-UP AND LOW BATTERY SIGNAL.(R314)
4. AN APPROVED CARBON MONOXIDE ALARM SHALL BE INSTALLED IN DWELLING UNITS AND IN SLEEPING UNITS WITHIN FUEL-BURNING APPLIANCES ARE INSTALLED AND IN DWELLING UNITS THAT HAVE ATTACHED GARAGES. CARBON MONOXIDE ALARM SHALL BE PROVIDED OUTSIDE OF EACH SEPARATE DWELLING UNIT SLEEPING AREA IN THE IMMEDIATE VICINITY OF THE BEDROOM(S) AND ON EVERY LEVEL OF A DWELLING UNIT INCLUDING BASEMENTS. (R315)
5. OPENINGS THROUGH A FLOOR / CEILING ASSEMBLY SHALL BE PROTECTED BY 1 HR SHAFT ENCLOSURE. THE SHAFT ENCLOSURE SHALL BE CONSTRUCTED OF FIRE BARRIERS AND HORIZONTAL ASSEMBLIES. (713)
6. PENETRATIONS IN WALLS REQUIRING PROTECTED OPENINGS MUST BE FIRESTOPPED WITH AN APPROVED MATERIAL IN ACCORDANCE WITH SECTION 714.3.1. SPACE BETWEEN PENETRATING MATERIALS (DESCRIBED BELOW) MUST BE DESIGNED TO PREVENT THE MOVEMENT OF HOT FLAME OR GASES
   A. STEEL, COPPER OR FERROUS PIPES OR CONDUITS MAY PENETRATE CONCRETE OR MASONRY WALLS WHERE THE PENETRATING ITEM IS A MAXIMUM 6-INCH DIAMETER AND THE AREA OF THE OPENING THROUGH THE WALL DOES NOT EXCEED 144 SQUARE INCHES. (714.3.1)
   B. MEMBRANE PENETRATIONS OF MAXIMUM 2-HR FIRE-RESISTANCE RATED WALL AND PARTITIONS BY STEEL ELECTRICAL OUTLET BOXES NOT EXCEEDING 16 SQUARE INCHES ARE PERMITTED PROVIDED OPENINGS DO NOT EXCEED 100 SQUARE INCHES FOR ANY 100 SQUARE FEET OF WALL AREA. OUTLET BOXES ON OPPOSITE SIDES OF WALLS OR PARTITIONS MUST BE SEPARATED BY A HORIZONTAL DISTANCE OF 24 INCHES. (714.3.2)
   C. WHERE WALLS ARE PENETRATED BY OTHER MATERIALS OR WHERE LARGER OPENINGS ARE REQUIRED THAN PERMITTED IN (B) ABOVE, THEY MUST BE QUALIFIED BY TESTS CONDUCTED IN ACCORDANCE WITH SECTION 714.3.1.2.
7. SMOKE AND FIRE DAMPERS MUST BE INSTALLED IN THE FOLLOWING LOCATIONS PER SECTIONS 714.3.1.2
   A. DUCT PENETRATIONS OF FIRE WALLS IN ACCORDANCE TO SECTION 717.1
   B. DUCT PENETRATIONS OF FIRE BARRIERS, EXCEPT EXIT ENCLOSURES AND EXIT PASSAGEWAYS WHERE THEY ARE NOT ALLOWED TO PENETRATE. (717.5.2)
   C. DUCTS PENETRATING SHAFTS. (717.5.3)
   D. DUCTS PENETRATING FIRE PARTITIONS AND FIRE-RATED CORRIDOR WALLS. SEE EXCEPTION FOR STEEL DUCTS WITH NO OPENINGS INTO CORRIDOR. (717.5.4)
   E. DUCTS PENETRATING SMOKE BARRIERS (717.5.5)
   F. DUCTS PENETRATING HORIZONTAL ASSEMBLIES (717.6)
8. FIRE BLOCKING MUST BE PROVIDED IN ACCORDANCE WITH SECTION 718.2 AT THE FOLLOWING LOCATIONS:
   A. IN CONCEALED SPACES OF STUD WALLS AND PARTITIONS, INCLUDING FURRED SPACES, AT THE CEILING AND FLOOR LEVELS.
   B. IN CONCEALED SPACES OF STUD WALLS AND PARTITIONS, INCLUDING FURRED SPACES, AT 10-FOOT INTERVALS ALONG THE LENGTH OF THE WALL.
   C. AT ALL INTERCONNECTIONS BETWEEN CONCEALED VERTICAL AND HORIZONTAL SPACES SUCH AS OCCUR AT SOFFITS, DROP CEILINGS, AND COVE CEILINGS.
   D. IN CONCEALED SPACES BETWEEN STAIR STRINGERS AT THE TOP AND BOTTOM OF THE RUN AND BETWEEN STUDS ALONG AND IN LINE WITH THE RUN OF STAIRS IF THE WALL UNDER THE STAIRS IS UNFINISHED.
   E. IN OPENINGS AROUND VENTS, PIPES, DUCTS, CHIMNEYS, FIREPLACES AND SIMILAR OPENINGS WHICH AFFORD A PASSAGE FOR FIRE AT CEILING AND FLOOR LEVELS, WITH NONCOMBUSTIBLE MATERIALS.
9. THIS BUILDING IS OF TYPE VA CONSTRUCTION, PROVIDE:
   A. CONTINUOUS DRYWALL BEHIND ALL TUBS IS REQUIRED UNLESS THE WALLS ARE WITHIN THE UNIT AND NON-BEARING. BACK TO BACK TUBS WITH A COMMON PLUMBING WALL ARE IMPRACTICAL IN 10HOUR BUILDINGS.
   B. ALL INTERIOR PARTITIONS SHALL BE CONSTRUCTED OF NOT LESS THAN 1-HOUR FIRE-RESISTIVE CONSTRUCTION.
   C. ATTIC ACCESS OPENINGS IN 1-HOUR CEILING CAN BE 2 LAYERS OF 3/4" PLYWOOD OR ONE LAYER OF 1-5/8" T&G MATERIAL, SELF-CLOSING.
   D. ALL OPENINGS IN FLOORS ARE REQUIRED TO BE ENCLOSED BY A SHAFT HAVING WALL, FLOOR, AND CEILING OF 1 HOUR FIRE RESISTIVE CONSTRUCTION. 714
   E. RECESSED CEILING LIGHT FIXTURES MUST BE BOXED AROUND WITH 5/8" TYPE "X" DRYWALL TO MAINTAIN THE 1-HOUR CEILING ASSEMBLY.
   F. CONTINUOUS DRYWALL IS REQUIRED BEHIND ALL ELECTRICAL SERVICE PANELS, FIRE HOSES AND MEDICINE CABINETS.
   G. EXHAUST FANS FROM THE BATHROOM MUST ENTER THROUGH THE WALL. DAMPERS ARE REQUIRED IF THE CEILING IS PENETRATED. (717.5)
   H. PLUMBING PENETRATION THROUGH HORIZONTAL OCCUPANCY SEPARATIONS SHALL BE BOXED OUT AND FILLED WITH APPROVED SAFING MATERIAL. INSULATION IS NOT APPROVED. (714.4.1)
   I. PENETRATION OF THE 1 HOUR CEILING BY DUCTS FROM THE FAU AND THE STOVE HOOD REQUIRE DAMPERS (USE A DUCTLESS HOOD WHENEVER POSSIBLE). ATTIC UNITS (INCLUDING HEAT PUMPS) REQUIRE DAMPERS AT ALL CEILING PENETRATIONS. (717.6.1)
   J. STEEL BEAMS AND COLUMNS SHALL BE PROTECTED AS REQUIRED FOR 1-HOUR PROTECTION. WHERE CEILING FORMS THE PROTECTIVE MEMBRANE FOR FIRE-RESISTIVE ASSEMBLIES (OCCUPANCY SEPARATIONS AND RATED ROOF/CEILING OR FLOOR/CEILING ASSEMBLIES), THE CONSTRUCTION (FLOOR JOISTS) AND THEIR SUPPORTING HORIZONTAL STRUCTURAL MEMBERS (BEAMS) NEED NOT BE INDIVIDUALLY FIRE PROTECTED EXCEPT WHERE SUCH MEMBERS SUPPORT DIRECTLY APPLIED LOADS FROM MORE THAN ONE FLOOR OR ROOF. THE REQUIRED FIRE RESISTANCE RATING SHALL NOT BE LESS THAN THAT REQUIRED FOR INDIVIDUAL PROTECTION OF MEMBERS. (704.3)
   K. ALL PLUMBING PENETRATIONS THRU WALLS WHICH REQUIRE PROTECTED OPENINGS (FIRE WALLS, FIRE BARRIERS, FIRE PARTITIONS) ARE REQUIRED TO BE GALVANIZED OR CAST IRON PIPING.

VERY HIGH FIRE SEVERITY ZONE (VHFHSZ) NOTES:

1. BASED ON CITY MAPS, THIS PROJECT IS LOCATED WITHIN VERY HIGH FIRE HAZARD SEVERITY ZONE (VHFHSZ). IT SHALL COMPLY WITH REQUIREMENTS OF MATERIALS, SYSTEMS & CONSTRUCTION METHODS OF CHAPTER 7A AND CHAPTER 72.
2. CLASS A ROOF COVERING IS REQUIRED FOR ALL BUILDINGS. (7207.4, 1505
3. VALLEY FLASHINGS SHALL BE NOT LESS THAN 0.019-INCH (0.48 MM) (NO. 26 GALVANIZED SHEET GAGE) CORROSION-RESISTANT METAL INSTALLED OVER A MINIMUM 36-INCH-WIDE (914MM) UNDERLAYMENT CONSISTING OF ONE LAYER OF NO. 72 ASTM CAP SHEET RUNNING THE FULL LENGTH OF THE VALLEY (704A.1.3) C. ROOF GUTTERS SHALL BE PROVIDED WITH THE MEANS TO PREVENT THE ACCUMULATION OF LEAVES AND DEBRIS IN THE GUTTER. (705A.4)
4. ROOF GUTTERS SHALL BE PROVIDED WITH THE MEANS TO PREVENT THE ACCUMULATION OF LEAVES AND DEBRIS IN THE GUTTER (704A.1.5)
5. (ROOF) (ATTIC)(EXTERIOR WALL) VENTS SHALL RESIST THE INTRUSION OF FLAME AND EMBERS INTO THE ATTIC AREA OF THE STRUCTURE, OR SHALL BE PROTECTED BY CORROSION-RESISTANT, NONCOMBUSTIBLE WIRE MESH WITH 1/4 -INCH (6 MM) OPENINGS OR ITS EQUIVALENT. VENTS SHALL NOT BE INSTALLED IN EAVES AND CORNICES. (704A.2.1, 704A3.2.1, 704A.2.2, 7207.3)
6. EAVES AND SOFFITS SHALL MEET THE REQUIREMENTS OF SFM 12-7A-3 OR SHALL BE PROTECTED BY IGNITION-RESISTANT MATERIALS OR NONCOMBUSTIBLE CONSTRUCTION ON THE EXPOSED UNDERSIDE (704A.2.3)
7. EXTERIOR WALLS SHALL BE APPROVED NONCOMBUSTIBLE OR IGNITION-RESISTANT MATERIAL, HEAVY TIMBER, OR LOG WALL CONSTRUCTION OR SHALL PROVIDE PROTECTION FROM THE INTRUSION OF FLAMES AND EMBERS IN ACCORDANCE WITH STANDARD SFM 12-7A-1. (704A.3.1)
8. EXTERIOR WALL COVERINGS SHALL EXTEND FROM THE TOP OF FOUNDATION TO THE ROOF, AND TERMINATE AT 2-INCH (50.8 MM) NOMINAL SOLID WOOD BLOCKING BETWEEN RAFTERS AT ALL ROOF OVERHANGS, OR IN THE CASE OF ENCLOSED EAVES, TERMINATE AT THE ENCLOSURE. (704A.3.2)
9. EXTERIOR WINDOWS, WINDOW WALLS, GLAZED DOORS, AND GLAZED OPENINGS WITHIN EXTERIOR DOORS SHALL BE INSULATING- GLASS UNITS WITH A MINIMUM OF ONE TEMPERED PANE, OR GLASS BLOCK UNITS, OR HAVE A FIRE- RESISTANCE RATING OF NOT LESS THAN 20 MINUTES, WHEN TESTED ACCORDING TO ASTM E 2010, OR CONFORM TO THE PERFORMANCE REQUIREMENTS OF SFM 12-7A-2 (704A.3.2.2)
10. EXTERIOR DOOR ASSEMBLIES SHALL CONFORM TO THE PERFORMANCE REQUIREMENTS OF STANDARD SFM 12-7A-1 OR SHALL BE APPROVED NONCOMBUSTIBLE CONSTRUCTION, OR SOLID CORE WOOD HAVING STILES AND RAILS NOT LESS THAN 1 3/8 INCHES THICK WITH INTERIOR FIELD PANEL THICKNESS NO LESS THAN 1 ¼ INCHES THICK, OR SHALL HAVE A FIRE-RESISTANCE RATING OF NOT LESS THAN 20 MINUTES WHEN TESTED ACCORDING TO ASTM E 2074. (EXCEPTION: NONCOMBUSTIBLE OR EXTERIOR FIRE-RETARDANT TREATED WOOD VEHICLE ACCESS DOORS). (704A.3.2.3)
11. DECKING, SURFACES, STAIR TREADS, RISERS, AND LANDINGS OF DECKS, PORCHES, AND BALCONIES WHERE ANY PORTION OF SUCH SURFACE IS WITHIN 10 FEET (3048 MM) OF THE PRIMARY STRUCTURE SHALL BE CONSTRUCTED OF HEAVY TIMBER, NON COMBUSTIBLE OR OTHER APPROVED MATERIALS PER SEC.704A.4.1
12. THE UNDERSIDE OF CANTILEVERED AND OVERHANGING APPENDAGES AND FLOOR PROJECTIONS SHALL MAINTAIN THE IGNITION- RESISTANT INTEGRITY OF EXTERIOR WALLS, OR THE PROJECTION SHALL BE ENCLOSED TO THE GRADE. (704A.4.2.1)
13. BUILDINGS SHALL HAVE ALL UNDERFLOOR AREAS COMPLETELY ENCLOSED TO THE GRADE WITH CONSTRUCTION AS REQUIRED FOR EXTERIOR WALLS. (704A.4.2.2, 7207.1)
14. ALL UTILITIES, PIPES, FURNACES, WATER HEATERS OR OTHER MECHANICAL DEVICES LOCATED IN AN EXPOSED UNDER-FLOOR AREA OF A RESIDENTIAL BUILDING SHALL BE ENCLOSED WITH MATERIALS AS REQUIRED FOR 1-HOUR FIRE-RESISTIVE CONSTRUCTION. (7207.2)
15. THE SPACE BETWEEN THE ROOF COVERING AND ROOF DECKING SHALL BE CONSTRUCTED TO PREVENT THE INTRUSION OF FLAMES AND EMBERS AND BE FIRE STOPPED PER 704A.1.2.
16. NO TRELLIS IS PERMITTED WITHIN 10 FEET OF THE PRIMARY STRUCTURE. TRELLIS MORE THAN 10 FEET FROM THE PRIMARY STRUCTURE SHALL BE CONSTRUCTED OF HEAVY TIMBER OR NON COMBUSTIBLE MATERIALS. MINIMUM OF 4 INCHES SPACING IS REQUIRED BETWEEN THE MEMBERS. (INFORMATION BULLETIN NO. P/BC 2008-023).

GRADING NOTES:

a. ALL GRADING SLOPES SHALL BE PLANTED AND SPRINKLERED (7012.1)
b. STANDARD 12" HIGH BERM IS REQUIRED AT TOP OF ALL GRADED SLOPES (7013.3)
c. NO FILL TO BE PLACED UNTIL THE CITY GRADING INSPECTOR HAS INSPECTED AND APPROVED THE BOTTOM EXCAVATION
d. MAN-MADE FILL SHALL BE COMPACTED TO A MINIMUM RELATIVE COMPACTION OF 90% MAX. DRY DENSITY WITHIN 40'-0" BELOW FINISH GRADE AND 93% OF MAX. DRY DENSITY DEEPER THAN 40'-0" BELOW FINISH GRADE, UNLESS A LOWER RELATIVE COMPACTION (NOT LESS THAN 90% MAX. DRY DENSITY) IS JUSTIFIED BY THE SOILS ENGINEER.
e. TEMPORARY EROSION CONTROL TO BE INSTALLED BETWEEN OCTOBER 1 AND APRIL 15. OBTAIN GRADING INSPECTOR'S AND DEPARTMENT OF PUBLIC WORKS APPROVAL OF PROPOSED PROCEDURES. [>200CY] (7007.1)
f. 100% OF EXCAVATED SOIL AND VEGETATION RESULTING FORM LAND CLEARING SHALL BE REUSED OR RECYCLED.

INTERIOR ENVIRONMENT:

1. PROVIDE 24" CLEAR SPACE IN FRONT OF ANY WATER CLOSET (CALIFORNIA PLUMBING CODE 407.6)
2. BATHROOM, WATER CLOSET COMPARTMENTS AND SIMILAR ROOMS SHALL BE PROVIDED NATURAL VENTILATION OR WITH MECHANICAL VENTILATION CAPABLE OF 50CFM EXHAUSTED DIRECTLY TO OUTSIDE (R303.3)
3. HEATER SHALL BE CAPABLE OF MAINTAINING A MINIMUM ROOM TEMPERATURE OF 68 DEGREES AT A POINT 3'-0" ABOVE THE FLOOR AND 2'-0" FROM THE EXTERIOR WALLS IN ALL HABITABLE ROOMS AT THE DESIGN TEMPERATURE (R303.9)

SECURITY REQUIREMENTS:

1. ALL ENTRY DOORS TO DWELLING UNITS OR GUEST ROOMS SHALL BE ARRANGED SO THAT THE OCCUPANT HAS A VIEW OF THE AREA IMMEDIATELY OUTSIDE THE DOOR WITHOUT OPENING THE DOOR. SUCH VIEW MAY BE PROVIDED BY A DOOR VIEWER, THROUGH WINDOWS LOCATED IN THE VICINITY OF THE DOOR OR THROUGH VIEW PORTS IN THE DOOR OR ADJOINING WALL. (6706)
2. SCREENS, BARRICADES, OR FENCES MADE OF A MATERIAL WHICH WOULD PRECLUDE HUMAN CLIMBING SHALL BE PROVIDED AT EVERY PORTION OF EVERY ROOF, BALCONY, OR SIMILAR SURFACE WHICH IS WITHIN 8 FT. OF THE UTILITY POLE OR SIMILAR STRUCTURES. (6707)
3. WOOD FLUSH-TYPE DOORS SHALL BE 1 3/8" THICK MINIMUM WITH SOLID CORE CONSTRUCTION. 91.6709.1 - DOOR STOPS OF IN-SWINGING DOORS SHALL BE OF ONE-PIECE CONSTRUCTION WITH THE JAMB OR JOINED BY RABBET TO THE JAMB. (6709.4)
4. EVERY DOOR IN A SECURITY OPENING FOR AN APARTMENT HOUSE SHALL BE PROVIDED WITH A LIGHT BULB (60 WATT MIN.) AT A MAXIMUM HEIGHT OF 8 FEET ON THE EXTERIOR. (6708)

ENVIRONMENTAL QUALITY BUILDING NOTES:

ENERGY EFFICIENCY:

1. 1. EACH APPLIANCE PROVIDED AND INSTALLED SHALL MEET ENERGY STAR IF AN ENERGY STAR DESIGNATION IS APPLICABLE FOR THAT APPLIANCE. (4.211.4)

WATER EFFICIENCY & CONSERVATION:

1. THE FLOW RATES FOR ALL PLUMBING FIXTURES SHALL COMPLY WITH THE MINIMUM FLOW RATES IN TABLE 4.303.2 (4.303.1)
2. WHEN SINGLE SHOWER FIXTURES ARE SERVED BY MORE THAN ONE SHOWERHEAD, THE COMBINED FLOW RATE OF ALL THE SHOWERHEADS SHALL NOT EXCEED THE MAXIMUM FLOW RATES SPECIFIED IN THE MAXIMUM ALLOWABLE FLOW RATE COLUMN CONTAINED IN TABLE 4.303.2 OR THE SHOWER SHALL BE DESIGNED TO ONLY ALLOW ONE SHOWERHEAD TO BE IN OPERATION AT A TIME. (4.303.2)
3. ALTERNATE WASTE PIPING SHALL BE INSTALLED TO PERMIT THE DISCHARGE FROM THE CLOTHES WASHER, BATHTUB, SHOWERS, AND BATHROOM/RESTROOM WASH BASINS TO BE USED FOR A FUTURE GRAYWATER IRRIGATION SYSTEM. THE FLOW FROM THE FIXTURES SHALL BE PIPED SEPARATELY. THE POINT OF CONNECTION BETWEEN THE GRAYWATER PIPING AND OTHER WASTE PIPING SHALL BE ACCESSIBLE (AS DEFINED IN SECTION 99.02.202) AND PROVIDED WITH SIGNAGE THAT IS SATISFACTORY TO THE DEPARTMENT. (4.305.1).

MATERIAL CONSERVATION AND RESOURCE EFFICIENCY:

1. ANNULAR SPACES AROUND PIPES, ELECTRIC CABLES, CONDUITS, OR OTHER OPENINGS IN THE BUILDING'S ENVELOPE AT EXTERIOR WALLS SHALL BE PROTECTED AGAINST THE PASSAGE OF RODENTS BY CLOSING SUCH OPENINGS WITH CEMENT MORTAR, CONCRETE MASONRY, OR METAL PLATES. (4.406.1)
2. MATERIALS DELIVERED TO THE CONSTRUCTION SITE SHALL BE PROTECTED FROM RAIN OR OTHER SOURCES OF MOISTURE. (4.407.4)
3. AN OPERATION ND MAINTENANCE MANUAL INCLUDING, AT A MINIMUM, THE ITEMS LISTED IN SECTION 4.410.1, SHALL BE COMPLETED AND PLACED IN THE BUILDING AT THE TIME OF FINAL INSPECTION. FORM GRN 6 (4.410.1)
4. CONSTRUCTION WASTE TO BE REDUCED BY 65%. TO BE HANDLED BY CITY OF LOS ANGELES CERTIFIED HAULER:
   A. AMERICAN RECLAMATION, INC. 4560 DORAN ST. LOS ANGELES, CA 90039
5. PRIMARY EXTERIOR ENTRIES SHALL BE COVERED TO PREVENT WATER INTRUSION BY USING NONABSORBENT FLOOR AND WALL FINISHES WITHIN AT LEAST 2 FEET AROUND AND PERPENDICULAR TO SUCH OPENINGS PLUS AT LEAST ONE OF THE FOLLOWING:
   A. AN INSTALLED AWNING OF AT LEAST 4 FEET IN DEPTH.
   B. THE DOOR IS PROTECTED BY A ROOF OVERHANG AT LEAST 4 FEET IN DEPTH.
   C. THE DOOR IS RECESSED AT LEAST 4 FEET.
   D. OTHER METHODS WHICH PROVIDE EQUIVALENT PROTECTION.

ENVIRONMENTAL QUALITY:

1. ALL DUCT AND OTHER RELATED AIR DISTRIBUTION COMPONENT OPENINGS SHALL BE COVERED WITH TAPE, PLASTIC, OR SHEET METAL UNTIL THE FINAL STARTUP OF THE HEATING AND COOLING EQUIPMENT. (5.504.3)
2. ARCHITECTURAL PAINTS AND COATINGS, ADHESIVES, CAULKS AND SEALANTS SHALL COMPLY WITH THE VOLATILE ORGANIC COMPOUND (VOC) LIMITS LISTED IN TABLES 5.504.1-5.504.3. (4.504.2.1-4.504.2.3)
3. THE VOC CONTENT VERIFICATION CHECKLIST, FORM GRN 2, SHALL BE COMPLETED AND VERIFIED PRIOR TO FINAL INSPECTION APPROVAL. THE MANUFACTURER'S SPECIFICATIONS SHOWING VOC CONTENT FOR ALL APPLICABLE PRODUCTS SHALL BE READILY AVAILABLE AT THE JOB SITE AND BE PROVIDED TO THE FIELD INSPECTOR FOR VERIFICATION. (4.504.2.4)
4. THE HEATING AND AIR-CONDITIONING SYSTEMS SHALL BE SIZED DESIGNED USING ANSI/ACCA MANUAL J 2004, ANSI/ACCA 29-D-2009 OR ASHRAE HANDBOOKS AND HAVE THEIR EQUIPMENT SELECTED IN ACCORDANCE WITH ANSI/ACCA 36-S MANUAL S-2004 . (4.507.2)
5. WHERE RESILIENT FLOORING IS INSTALLED, AT LEAST 50 PERCENT OF FLOOR AREA RECEIVING RESILIENT FLOORING SHALL COMPLY WITH THE VOC EMISSION LIMITS DEFINED IN THE COLLABORATIVE FOR HIGH PERFORMANCE SCHOOLS (CHPS) LOW-EMITTING MATERIALS LIST OR CERTIFIED UNDER THE RESILIENT FLOOR COVERING INSTITUTE (RFCI) FLOORSCORE PROGRAM.
6. BUILDING MATERIALS WITH VISIBLE WATER DAMAGE AND FLOOR OR WALL FRAMING WITH OVER 19% MOISTURE CONTENT SHALL NOT BE INSTALLED PER CGC 4.505.3.
7. HEATING AND AIR-CONDITIONING SYSTEM DESIGN. HEATING AND AIR-CONDITIONING SYSTEMS SHALL BE SIZED, DESIGNED AND HAVE THEIR EQUIPMENT SELECTED USING THE METHODS SPECIFIED IN 4.507.2.

a. THE VOC CONTENT VERIFICATION CHECKLIST, FORM GRN 2, SHALL BE COMPLETED AND VERIFIED PRIOR TO FINAL INSPECTION APPROVAL. THE MANUFACTURER'S SPECIFICATIONS SHOWING VOC CONTENT FOR ALL APPLICABLE PRODUCTS SHALL BE READILY AVAILABLE AT THE JOB SITE AND BE PROVIDED TO THE FIELD INSPECTOR FOR VERIFICATION." (4.504.2.4)

b. ALL NEW CARPET INSTALLED IN THE BUILDING INTERIOR SHALL MEET THE TESTING AND PRODUCT REQUIREMENTS OF ONE OF THE FOLLOWING: I. CARPET AND RUG INSTITUTE'S GREEN LABEL PLUS PROGRAM II. CALIFORNIA DEPARTMENT OF PUBLIC HEALTH STANDARD PRACTICE FOR THE TESTING OF VOCS (SPECIFICATION 01350) III. NSF/ANSI 140 AT THE GOLD LEVEL IV. SCIENTIFIC CERTIFICATIONS SYSTEMS INDOOR ADVANTAGE GOLD V. COMPLIANT WITH THE COLLABORATIVE FOR HIGH PERFORMANCE SCHOOLS CALIFORNIA (CA -CHPS) CRITERIA INTERPRETATION FOR EQ 7.0 AND 7.1 AND LISTED IN THE CHPS HIGH PERFORMANCE PRODUCT DATABASE. (5.504.4.4)

c. ALL NEW CARPET CUSHION INSTALLED IN THE BUILDING INTERIOR SHALL MEET THE REQUIREMENTS OF THE CARPET AND RUG INSTITUTE GREEN LABEL PROGRAM. (5.504.4.4.1)

d. 80% OF THE TOTAL AREA RECEIVING RESILIENT FLOORING SHALL COMPLY WITH ONE OR MORE OF THE FOLLOWING:
   - i. CERTIFIED AS A CHPS LOW-EMITTING MATERIAL IN THE CHPS HIGH PERFORMANCE PRODUCTS DATABASE
   - ii. CERTIFIED UNDER UL GREENGUARD GOLD
   - iii. CERTIFIED UNDER THE RESILIENT FLOOR COVERING INSTITUTE (RFCI) FLOORSCORE PROGRAM
   - iv. MEET THE CALIFORNIA DEPARTMENT OF PUBLIC HEALTH'S SPECIFICATION 01350 (5.504.4.6)

e. NEW HARDWOOD PLYWOOD, PARTICLE BOARD, AND MEDIUM DENSITY FIBERBOARD COMPOSITE WOOD PRODUCTS USED IN THE INTERIOR OR EXTERIOR OF THE BUILDING SHALL MEET THE FORMALDEHYDE LIMITS LISTED IN TABLE (5.504.4.5)

f. THE FORMALDEHYDE VERIFICATION CHECKLIST, GRN 3, SHALL BE COMPLETED PRIOR TO FINAL INSPECTION APPROVAL. THE MANUFACTURER'S SPECIFICATIONS FOR ALL APPLICABLE WOOD PRODUCTS SHALL BE READILY AVAILABLE AT THE JOB SITE AND PROVIDED TO THE FIELD INSPECTOR FOR VERIFICATION.

g. BUILDING MATERIALS WITH VISIBLE SIGNS OF WATER DAMAGE SHALL NOT BE INSTALLED. WALL AND FLOOR FRAMING SHALL NOT BE ENCLOSED UNTIL IT IS INSPECTED AND FOUND TO BE SATISFACTORY BY THE BUILDING INSPECTOR. (4.505.3)

h. NEWLY INSTALLED BATHROOM EXHAUST FANS SHALL BE ENERGY STAR COMPLIANT AND BE DUCTED TO TERMINATE TO THE OUTSIDE OF THE BUILDING AND. (4.506.1). WHOLE HOUSE EXHAUST FANS SHALL HAVE COVERS OR LOUVERS THAT CLOSE WHEN OFF, AND A MINIMUM R VALUE OF 4.2.

i. NEWLY INSTALLED BATHROOM EXHAUST FANS, NOT FUNCTIONING AS A COMPONENT OF A WHOLE HOUSE VENTILATION SYSTEM, MUST BE CONTROLLED BY A HUMIDISTAT WHICH SHALL BE READILY ACCESSIBLE. (4.506.1)

8. WHOLE HOUSE EXHAUST FANS SHALL HAVE COVERS OR LOUVERS WHICH CLOSE WHEN THE FAN IS OFF AND THAT ARE INSULATED WITH A MINIMUM INSULATION VALUE OF R-4.2 (4.507.1)
9. HEATING AND AIR-CONDITIONING SYSTEMS SHALL BE DESIGNED USING ASNI/ACCA MANUAL J-2004, ANSI/ACCA 27-D-2009 OR ASHRAE HANDBOOKS AND HAVE THEIR EQUIPMENT SELECTED IN ACCORDANCE WITH ANSI/ACCA 36-S MANUAL S-2004. (CALGREEN 4.507.2)
10. IN EXISTING DEVELOPMENTS, ONLY CLEANER WOOD BURNING DEVICES ARE ALLOWED. THE DEVICES THAT ARE ALLOWED SHALL BE EITHER US EPA PHASE ii-CERTIFIED WOOD HEATERS, PELLET-FUELED HEATERS, OR ASTM E 1602-03 DEFINED MASONRY HEATERS.
11. IF THE NEW HVAC SYSTEM IS USED DURING CONSTRUCTION, USE RETURN AIR FILTERS WITH A MERV OF 8. REPLACE ALL FILTERS IMMEDIATELY PRIOR TO OCCUPANCY.
12. AN AIR FILTER WITH A MINIMUM EFFICIENCY REPORTING VALUE (MERV) OF 8 OR HIGHER SHALL BE INSTALLED IN THE MECHANICAL SYSTEM FOR OUTSIDE AND RETURN AIR PRIOR TO OCCUPANCY. (5.504.5.3)
13. THE BUILDING SHALL MEET OR EXCEED THE PROVISIONS FOR MECHANICAL VENTILATION OF SECTION 1203 OF THE LOS ANGELES BUILDING CODE. (5.505.1)
14. ADDITIONS TO BUILDINGS THAT USE DEMAND CONTROL VENTILATION SHALL HAVE CO2 SENSORS AND VENTILATION CONTROLS INSTALLED IN ACCORDANCE WITH THE REQUIREMENTS OF THE CURRENT EDITION OF THE CALIFORNIA ENERGY CODE, CCR, TITLE 24, PART 6, SECTION 121(C). (5.506.2)
15. THE HVAC, REFRIGERATION, AND FIRE SUPPRESSION EQUIPMENT SHALL NOT CONTAIN CFC OR HALONS. (5.508.1)

OPENINGS IN THE BUILDING ENVELOPE FOR GAS, PLUMBING, AND ELECTRICAL LINES MUST BE SEALED IN COMPLIANCE WITH THE CALIFORNIA ENERGY CODE. ANNULAR SPACES AROUND PIPES, CABLES, CONDUITS, OR OTHER OPENINGS AT EXTERIOR WALLS SHALL BE PROTECTED AGAINST THE PASSAGE OF RODENTS WITH THE USE OF CEMENT MORTAR, CONCRETE MASONRY, OR OTHER SIMILAR METHODS APPROVED BY THE DEPARTMENT OF BUILDING AND SAFETY.

1. AT THE TIME OF FINAL INSPECTION, A MANUAL, COMPACT DISC, WEB-BASED REFERENCE OR OTHER MEDIA ACCEPTABLE TO THE ENFORCING AGENCY WHICH INCLUDES ALL OF THE FOLLOWING SHALL BE PLACED IN THE BUILDING:

a. DIRECTIONS TO THE OWNER OR OCCUPANT THAT THE MANUAL SHALL REMAIN WITH THE BUILDING THROUGHOUT THE LIFE CYCLE OF THE STRUCTURE.

b. OPERATION AND MAINTENANCE INSTRUCTIONS FOR THE FOLLOWING: A. EQUIPMENT AND APPLIANCES, INCLUDING WATER-SAVING DEVICES AND SYSTEMS, HVAC SYSTEMS, WATER-HEATING SYSTEMS AND OTHER MAJOR APPLIANCES AND EQUIPMENT. B. ROOF AND YARD DRAINAGE, INCLUDING GUTTERS AND DOWNSPOUTS. C. SPACE CONDITIONING SYSTEMS, INCLUDING CONDENSERS AND AIR FILTERS. D. LANDSCAPE IRRIGATION SYSTEMS. E. WATER REUSE SYSTEMS.

c. INFORMATION FROM LOCAL UTILITY, WATER AND WASTE RECOVERY PROVIDERS ON METHODS TO FURTHER REDUCE RESOURCE CONSUMPTION, INCLUDING RECYCLE PROGRAMS AND LOCATIONS

d. PUBLIC TRANSPORTATION AND/OR CARPOOL OPTIONS AVAILABLE IN THE AREA.

e. EDUCATIONAL MATERIAL ON THE POSITIVE IMPACTS OF AN INTERIOR RELATIVE HUMIDITY BETWEEN 30–60 PERCENT AND WHAT METHODS AN OCCUPANT MAY USE TO MAINTAIN THE RELATIVE HUMIDITY LEVEL IN THAT RANGE.

f. INFORMATION ABOUT WATER-CONSERVING LANDSCAPE AND IRRIGATION DESIGN AND CONTROLLERS WHICH CONSERVE WATER.

g. INSTRUCTIONS FOR MAINTAINING GUTTERS AND DOWNSPOUTS AND THE IMPORTANCE OF DIVERTING WATER AT LEAST 5 FEET AWAY FROM THE FOUNDATION.

h. INFORMATION ON REQUIRED ROUTINE MAINTENANCE MEASURES, INCLUDING, BUT NOT LIMITED TO, CAULKING, PAINTING, GRADING AROUND THE BUILDING, ETC.

i. INFORMATION ABOUT STATE SOLAR ENERGY AND INCENTIVE PROGRAMS AVAILABLE.

j. A COPY OF ALL SPECIAL INSPECTION VERIFICATIONS REQUIRED BY THE ENFORCING AGENCY OR THIS CODE.

LANDSCAPE NOTE:

1. FOR PROJECTS THAT INCLUDE LANDSCAPE WORK, THE LANDSCAPE CERTIFICATION, FORM GRN 12, SHALL BE COMPLETED PRIOR TO FINAL INSPECTION APPROVAL.
2. AUTOMATIC LANDSCAPE IRRIGATORS SHALL BE INSTALLED IN SUCH A WAY THAT IT DOESN'T SPRAY ON THE BUILDING.

ADDITIONAL NOTES: CONSTRUCTION HOURS

ENERGY EFFICIENCY

1. THE MAIN SERVICE PANEL SHALL HAVE A MINIMUM BUSBAR RATING OF 200 AMPS.
2. THE MAIN ELECTRICAL SERVICE PANEL SHALL HAVE A RESERVED SPACE TO ALLOW FOR INSTALLATION OF A DOUBLE POLE CIRCUIT BREAKER FOR A FUTURE SOLAR ELECTRIC INSTALLATION. THE RESERVED SPACE SHALL BE POSITIONED AT THE OPPOSITE (LOAD) END FROM THE INPUT FEEDER LOCATION OR MAIN CIRCUIT LOCATION AND SHALL BE PERMANENTLY MARKED AS 'FOR FUTURE SOLAR ELECTRIC'.
3. A COPY OF THE CONSTRUCTION DOCUMENTS OR A COMPARABLE DOCUMENT INDICATING THE INFORMATION FROM ENERGY CODE SECTIONS 110.10(B) THROUGH 110.10(C) SHALL BE PROVIDED

FIRE ALARM NOTES

FIRE ALARM SHOP DRAWINGS (*LAFD 907*)
SUBMIT SHOP DRAWINGS FOR FIRE ALARM SYSTEMS FOR REVIEW AND APPROVAL PRIOR TO SYSTEM INSTALLATION, AND SHALL INCLUDE, BUT NOT BE LIMITED TO, ALL OF THE FOLLOWING WHERE APPLICABLE TO THE SYSTEM BEING INSTALLED:

1. A FLOOR PLAN THAT INDICATES THE USE OF ALL ROOMS
2. LOCATIONS OF ALARM-INITIATING DEVICES
3. LOCATIONS OF ALARM NOTIFICATION APPLIANCES, INCLUDING CANDELA RATINGS FOR VISIBLE ALARM NOTIFICATION APPLIANCES
4. DESIGN MINIMUM AUDIBILITY LEVEL FOR OCCUPANT NOTIFICATION
5. LOCATION OF FIRE ALARM CONTROL UNIT, TRANSPONDERS AND NOTIFICATION POWER SUPPLIES
6. ANNUNCIATORS
7. POWER CONNECTION
8. BATTERY CALCULATIONS
9. CONDUCTOR TYPE AND SIZES
10. VOLTAGE DROP CALCULATIONS
11. MANUFACTURERS' DATA SHEETS INDICATING MODEL NUMBERS AND LISTING INFORMATION FOR EQUIPMENT, DEVICES AND MATERIALS
12. DETAILS OF CEILING HEIGHT AND CONSTRUCTION
13. THE INTERFACE OF FIRE SAFETY CONTROL FUNCTIONS
14. CLASSIFICATION OF THE SUPERVISING SITUATION
15. *ALL PLANS AND SHOP DRAWINGS SHALL USE THE SYMBOLS IDENTIFIED IN NFPA 170, STANDARD FOR FIRE SAFETY AND EMERGENCY SYMBOLS*
    A. ***EXCEPTION**: OTHER SYMBOLS ARE ALLOWED WHERE APPROVED BY THE ENFORCING AGENCY*
16. ELECTRICAL SCHEMATICS SHOWING THE FIRE ALARM SYSTEM AND ALL OTHER INFORMATION NECESSARY TO DETERMINE THE CORRECT METHODS OF INSTALLATION. PRIOR TO THE COMMENCEMENT OF INSTALLATION, THE MANUFACTURER AND STATE FIRE MARSHAL LISTING SHALL BE INCLUDED FOR ALL COMPONENTS OF THE SYSTEM
17. WRITTEN SEQUENCE OF OPERATION DESCRIBING, IN DETAIL, WHAT IS TO OCCUR UPON ACTIVATION OF A SYSTEM OR DEVICE AND HOW THE SYSTEM OR DEVICE INTERFACES WITH OTHER SYSTEMS. INCLUDED IN THIS WRITTEN SEQUENCE OF OPERATION SHALL BE ALL OTHER INFORMATION NECESSARY TO DETERMINE THE OPERATION WHICH WOULD BE REQUIRED FOR THE TYPE OF OCCUPANCY

ABBREVIATIONS

ACT	ACOUSTICAL CEILING TILE
AFF	ABOVE FINISH FLOOR
ALQ	ACCESSORY LIVING QUARTERS
ALT	ALTERNATE
AD	AREA DRAIN
BLDG	BUILDING
BOT	BOTTOM
CIP	CAST IN PLACE
CL	CENTER LINE
CLG	CEILING
CLR	CLEAR
COL	COLUMN
CONC	CONCRETE
CONT	CONTINUOUS
CPT	CARPET
CT	CERAMIC TILE
CMU	CONCRETE MASONRY UNIT
DIA	DIAMETER
DIM	DIMENSION
DN	DOWN SPOUT
DS	DETAIL
DTL	DRAWING
DWG	EAST
E	EXISTING
(E)	EACH
EA	ELEVATION
EL	ELECTRIC(AL)
ELEC	ELEVATOR
ELEV	EQUAL
EQ	EXPOSED
EXP	FLOOR DRAIN
FD	FINISH GRADE
FG	FLOOR
FL	FACE OF FINISH
FOF	FOOT
FT	GAUGE
GA	GLAZING
GLZ	GYPSUM WALL BOARD
GWB	HOSE BIBB
HB	HOLLOW CORE
HC	HARDWARE
HDWR	HOLLOW METAL
HM	HORIZONTAL
HOR	HOUR
HR	HEIGHT
HT	HEATING, VENTILATION AND AIR
HVAC	CONDITIONING
	INSIDE DIAMETER
ID	INSULATION
INS	MATERIAL
MAT	MAXIMUM
MAX	MANUFACTURER
MFR	MINIMUM
MIN	MISCELLANEOUS
MISC	METAL
MTL	NORTH
N	NOT IN CONTRACT
NIC	NUMBER
No	NOT TO SCALE
NTS	ON CENTER
OC	OUTSIDE DIAMETER
OD	RADIUS/RISER
R	REFERENCE
REF	REQUIRED
REQ	REVISION
REV	RIGHT OF WAY
ROW	SOUTH
S	SOLID CORE
SC	SIMILAR
SIM	SINGLE FAMILY DWELLING
SFD	SPECIFICATIONS
SPEC	SLOPE TO DRAIN
STD	STRUCTURAL
STRUCT	SQUARE FEET
SF	STONE TILE
ST	STUCCO
STC	STEEL
STL	STONE
STN	TREAD
T	TOP OF BEAM
TOB	TOP OF CONCRETE
TOC	TOP OF FLOOR
TOF	TOP OF SLAB
TOS	TOP OF WALL
TOW	TERRAZZO
TRZ	TYPICAL
TYP	UNLESS NOTED OTHERWISE
UNO	VERTICAL
VERT	WEST
W	WOOD
WD	WATERPROOF(ING)
WP	

SYMBOL LEGEND

NORT

Ref / 1 — **EXTERIOR ELEVATION**

1 / A101 SIM — **BUILDING SECTION**

1 / A101 / 1 / 1 — **INTERIOR ELEVATION**

10' - 0" / GYP-1 — **SPOT ELEVATION / CEILING TAG**
SPOT ELEVATIONS ARE TO FINISH GRADE, FLOOR, OR CEILING, UNLESS OTHERWISE NOTED.

1 / A101 SIM — **ENLARGED PLAN / DETAIL**

1 / A101 SIM — **DETAIL KEY**

1 — **REVISION CLOUD**

4' - 0" — **DIMENSIONS**
NOTE: PLAN DIMENSIONS OF WALLS ARE TO FACE OF STUD, CONCRETE, OR MASONRY UNLESS OTHERWISE NOTED.

CENTERLINE

PROPERTY LINE

0 — **GRID BUBBLE**

ROOM TAG
Bedroom — ROOM NAME
101 / 100 SF — ROOM NUMBER; ROOM AREA (NET SQUARE FEET)

101 — **DOOR TAG**

WINDOW TAG

WALL FRAMING TAG

WALL FINISH TAG

CON-1 — **MATERIAL TAG**

LEVEL CHANGE / SLAB DEPRESSION

RC-1 — **LIGHTING TAG**

SINK-4 — **PLUMBING FIXTURE TAG**

VIEW NAME 00
SCAL 3/32" = 1'-0"
E:
SCALE
DRAWING NUMBER

NOT FOR CONSTRUCTION

17.NOV.2021
100% DESIGN SUBMITTAL

ba
belzberg architects
2740 MAIN STREET
SANTA MONICA, CA 90405
310.453.9611
www.belzbergarchitects.com

#	DESCRIPTION	DATE

HOLOCAUST MUSEUM LA EXPANSION

100 THE GROVE DRIVE
LOS ANGELES, CA 90036

GENERAL NOTES, SYMBOLS & ABBREVIATIONS

PROJECT NUMBER: 17009

G004

11/18/2021 3:09:15 PM

FORM GRN 1

STORM WATER POLLUTION CONTROL
(2020 Los Angeles Green Building Code)

Storm Water Pollution Control Requirements for Construction Activities
Minimum Water Quality Protection Requirements for All Construction Projects

The following notes shall be incorporated in the approved set of construction/grading plans and represents the minimum standards of good housekeeping which must be implemented on all construction projects.

Construction means constructing, clearing, grading or excavation that result in soil disturbance. Construction includes structure teardown (demolition). It does not include routine maintenance to maintain original line and grade, hydraulic capacity, or original purpose of facility; emergency construction activities required to immediately protect public health and safety; interior remodeling with no outside exposure of construction material or construction waste to storm water; mechanical permit work; or sign permit work. (Order No. 01-182, NPDES Permit No. CAS004001 – Part 5: Definitions)

1. Eroded sediments and pollutants shall be retained on site and shall not be transported from the site via sheet flow, swales, area drains, natural drainage or wind.
2. Stockpiles of earth and other construction-related materials shall be covered and/or protected from being transported from the site by wind or water.
3. Fuels, oils, solvents and other toxic materials must be stored in accordance with their listing and shall not contaminate the soil nor the surface waters. All approved toxic storage containers are to be protected from the weather. Spills must be cleaned up immediately and disposed of properly and shall not be washed into the drainage system.
4. Non-storm water runoff from equipment and vehicle washing and any other activity shall be contained on the project site.
5. Excess or waste concrete may not be washed into the public way or any drainage system. Provisions shall be made to retain concrete waste on-site until it can be appropriately disposed of or recycled.
6. Trash and construction –related solid wastes must be deposited into a covered receptacle to prevent contamination of storm water and dispersal by wind.
7. Sediments and other materials shall not be tracked from the site by vehicle traffic. The construction entrance roadways must be stabilized so as to inhibit sediments from being deposited into the street/public ways. Accidental depositions must be swept up immediately and may not be washed down by rain or by any other means.
8. Retention basins of sufficient size shall be provided to retain storm water runoff on-site and shall be properly located to collect all tributary site runoff.
9. Where retention of storm water runoff on-site is not feasible due to site constraints, runoff may be conveyed to the street and the storm drain system provided that an approved filtering system is installed and maintained on-site during the construction duration.

As a covered entity under Title II of the Americans with Disabilities Act, the City of Los Angeles does not discriminate on the basis of disability and, upon request, will provide reasonable accommodation to ensure equal access to its programs, services and activities.

FORM GRN 10

2020 Los Angeles Green Building Code

MANDATORY REQUIREMENTS CHECKLIST
ADDITIONS AND ALTERATIONS TO NON-RESIDENTIAL BUILDINGS
(COMPLETE AND INCORPORATE THIS FORM INTO THE PLANS)

Permit # _____ - _____ - _____ Date: _____

ITEM #	CODE SECTION	REQUIREMENTS	REFERENCE SHEET (Sheet # or N/A)	COMMENTS (e.g. note #, detail # or reason for N/A)
		PLANNING AND DESIGN		
1	5.106.1	**Storm water drainage and retention during construction**	G020	GRN1
2	5.106.4.1.1	**Short-term bicycle parking (≥ 10 vehicular parking spaces)**		
3	5.106.4.1.2	**Long-term bicycle parking (≥ 10 vehicular parking spaces)**		
4	5.106.5.2	**Designated parking (≥ 10 vehicular parking spaces)**		
5	5.106.10	**Grading and Paving**		
		ENERGY EFFICIENCY		
6	5.211.1	**Solar ready (additions ≥ 2,000 sq. ft.)**	E221A and E221B	Roof plan.
		WATER EFFICIENCY & CONSERVATION		
7	5.303.1.1	**Additions in excess of 50,000 sq. ft.**	N/A	N/A
8	5.303.1.2	**Excess consumption**	N/A	N/A
9	5.303.2	**Water reduction**	P010	Schedule
10	5.303.3	**Water conserving plumbing fixtures and fittings**	P010	Schedule
11	5.303.3.3	**Showerheads**	N/A	N/A
12	5.304.1	**Outdoor water use in landscape areas**	G021	GRN 18N
13	5.304.3	**Irrigation controller and sensor application**	G020	GRN 15, #6
14	5.304.4	**Outdoor water use meters**	G021	GRN 18N, #4
15	5.304.5	**Exterior faucets**	P010	Schedule
16	5.305.1	**Graywater ready**	N/A	N/A
17	5.305.2	**Recycled water supply to fixtures**	N/A	N/A
		MATERIAL CONSERVATION & RESOURCE EFFICIENCY		
18	5.407.1	**Weather protection**		
19	5.407.2.1	**Sprinklers**	Spec section 211314	Included in specs.
20	5.407.2.2.1	**Nonabsorbent floor and wall finishes**		
21		**Exterior door protection**		
22	5.407.2.2.2	**Flashing**		
23	5.408.1	**Construction waste reduction**		
24	5.408.3	**Excavated soil and land clearing debris**		

As a covered entity under Title II of the Americans with Disabilities Act, the City of Los Angeles does not discriminate on the basis of disability and, upon request, will provide reasonable accommodation to ensure equal access to its programs, services and activities.

FORM GRN 10

2020 Los Angeles Green Building Code

ITEM #	CODE SECTION	REQUIREMENTS	REFERENCE SHEET (Sheet # or N/A)	COMMENTS (e.g. note #, detail # or reason for N/A)
25	5.410.1	**Recycling by occupants (additions that are > 30% of existing floor area)**		
26	5.410.4	**Testing, adjusting and balancing**	Spec section 230800	Included in spec.
27	5.410.4.2	– **Systems**	Spec section 230800	Included in spec.
28	5.410.4.3	– **Procedures**	Spec section 230800	Included in spec.
29	5.410.4.4	– **Reporting**	Spec section 230800	Included in spec.
30	5.410.4.5	– **Operation and maintenance manual**	Spec section 230800	Included in spec.
31	5.410.4.5.1	– **Inspections and reports**	Spec section 230800	Included in spec.
		ENVIRONMENTAL QUALITY		
32	5.503.1	**Fireplace and Woodstoves**	N/A	N/A
33	5.504.1.3	**Temporary ventilation**	N/A	N/A
34	5.504.3	**Covering of duct openings and protection of mechanical equipment during construction**	Spec section 230500-3.5-C	Included in spec.
35	5.504.4	**Finish material pollutant control**	G020	GRN-11
36	5.504.4.1	– **Adhesives, sealants, and caulks**		
37	5.504.4.3	– **Paints and coatings**		
38	5.504.4.3.1	– **Aerosol paints and coatings**		
39	5.504.4.3.2	– **Verification**		
40	5.504.4.4	**Carpet systems**	G020	GRN-15 #21
41	5.504.4.4.1	**Carpet cushion**	G020	GRN-15 #22
42	5.504.4.5	**Composite wood products**	G020	GRN-15 #23,24
43	5.504.4.6	**Resilient flooring systems**	G020	GRN-15 #25
44	5.504.5.3	**Filters**	M010	AHU Schedule
45	5.504.7	**Environmental tobacco smoke (ETS) control**	G020	GRN-15 #27
46	5.505.1	**Indoor moisture control**	G020	GRN-15 #28
47	5.506.2	**Carbon dioxide (CO_2) monitoring**	Spec section 230913-2.5-A	Included in spec.
48	5.507.4.1	**Exterior noise transmission prescriptive method**		
49		– **Exterior noise transmission for roof**		
50		– **Exterior noise transmission for walls**		
51		– **Exterior noise transmission for windows**		
52	5.507.4.2	**Exterior noise transmission performance method**		
52	5.507.4.3	**Interior sound transmission**	N/A	SINGLE TENANT
53	5.508.1	**Ozone depletion and greenhouse gas reductions**	M010	AHU Schedule
54	5.508.2	**Supermarket refrigerant leak reduction**	N/A	Not applicable.

As a covered entity under Title II of the Americans with Disabilities Act, the City of Los Angeles does not discriminate on the basis of disability and, upon request, will provide reasonable accommodation to ensure equal access to its programs, services and activities.

FORM GRN 11

VOC AND FORMALDEHYDE LIMITS
2020 Los Angeles Green Building Code
(Incorporate this form into the plans)

2020 Los Angeles Green Building Code Tables 4.504.1, 4.504.2, 4.504.3, 4.504.5, 5.504.4.1, 5.504.4.2, 5.504.4.3, 5.504.4.5

VOC CONTENT LIMITS FOR ARCHITECTURAL COATINGS [2,3]
Grams of VOC per Liter of Coating, Less Water and Less Exempt Compounds

COATING CATEGORY [2,3]	CURRENT LIMIT
Flat coatings	50
Nonflat coatings	50
Nonflat-high gloss coatings	50
Specialty Coatings	
Aluminum roof coatings	100
Basement specialty coatings	400
Bituminous roof coatings	50
Bituminous roof primers	350
Bond breakers	350
Concrete curing compounds	100
Concrete curing compounds, Roadways & Bridges	350
Concrete/masonry sealers	100
Driveway sealers	50
Dry fog coatings	50
Faux finishing coatings	
Clear Top Coat	100
Decorative Coatings	350
Glazes	350
Japan	350
Trowel Applied Coatings	50
Fire resistive coatings	150
Floor coatings	50
Form-release compounds	100
Graphic arts coatings (sign paints)	200
High temperature coatings	420
Industrial maintenance coatings	100
Low solids coatings[1]	120
Magnesite cement coatings	450
Mastic texture coatings	100
Metallic pigmented coatings	150
Multicolor coatings	250
Pretreatment wash primers	420
Primers, sealers, and undercoaters	100
Reactive penetrating sealers	350
Recycled coatings	250
Roof coatings	50
Roof coatings, aluminum	100
Rust preventative coatings	100
Shellacs	
Clear	730
Opaque	550
Specialty primers, sealers and undercoaters	100
Stains	100
Stains, Interior	250
Stone consolidants	450
Swimming pool coatings	340
Traffic marking coatings	100
Tub and tile refinish coatings	420
Waterproofing membranes	100
Wood coatings	275
Wood preservatives	350
Zinc-rich primers	100

[1] Grams of VOC per liter of coating, including water and including exempt compounds.
[2] The specified limits remain in effect unless revised limits are listed in subsequent columns in the table.
[3] More values in this table are derived from those specified by the California Air Resources Board, Architectural Coatings Suggested Control Measure, February 5, 2016. More information is available from the Air Resources Board.

FORMALDEHYDE LIMITS[1]
Maximum Formaldehyde Emissions in Parts per Million, Less Water and Less Exempt Compounds

PRODUCT	CURRENT LIMIT
Hardwood plywood veneer core	0.05
Hardwood plywood composite core	0.05
Particleboard	0.09
Medium density fiberboard	0.11
Thin medium density fiberboard[2]	0.13

[1] Values in this table are derived from those specified by the California Air Resources Board, Air Toxic Control Measure for Composite Wood as amended by Executive Order G-A-STATE 1333. For additional information, see California Code of Regulations, Title 17, Sections 93120 through 93120.12.
[2] Thin medium density fiberboard has a maximum thickness of 5/16 inches (8 mm).

SEALANT VOC LIMIT
Less Water and Less Exempt Compounds in Grams per Liter

SEALANTS	CURRENT VOC LIMIT
Architectural	50
Marine deck	760
Nonmembrane roof	300
Roadway	250
Single-ply roof membrane	450
Other	420
SEALANT PRIMERS	
Architectural	
Nonporous	250
Porous	775
Modified bituminous 500	500
Marine deck	760
Other	750

Note: For additional information regarding methods to measure the VOC content specified in these tables, see South Coast Air Quality Management District Rule 1168.

ADHESIVE VOC LIMIT 1,2
Less Water and Less Exempt Compounds in Grams per Liter

ARCHITECTURAL APPLICATIONS	CURRENT VOC LIMIT
Indoor carpet adhesives	50
Carpet pad adhesives	50
Outdoor carpet adhesives	150
Wood flooring adhesive	100
Rubber floor adhesives	60
Subfloor adhesives	50
Ceramic tile adhesives	65
VCT and asphalt tile adhesives	50
Drywall and panel adhesives	50
Cove base adhesives	50
Multipurpose construction adhesives	70
Structural glazing adhesives	100
Single-ply roof membrane adhesives	250
Other adhesives not specifically listed	50
SPECIALTY APPLICATIONS	
PVC welding	510
CPVC welding	490
ABS welding	325
Plastic cement welding	100
Adhesive primer for plastic	550
Contact adhesive	80
Special purpose contact adhesive	250
Structural wood member adhesive	140
Top and trim adhesive	250
SUBSTRATE SPECIFIC APPLICATIONS	
Metal to metal	30
Plastic foams	50
Porous material (except wood)	50
Wood	30
Fiberglass	80

[1] If an adhesive is used to bond dissimilar substrates together, the adhesive with the highest VOC content shall be allowed.
[2] For additional information regarding methods to measure the VOC content specified in this table, see South Coast Air Quality Management District Rule 1168, http://www.arb.ca.gov/DRDB/SC/CURHTML/R1168.PDF.

As a covered entity under Title II of the Americans with Disabilities Act, the City of Los Angeles does not discriminate on the basis of disability and, upon request, will provide reasonable accommodation to ensure equal access to its programs, services and activities.

FORM GRN 15

2020 Los Angeles Green Building Code

GREEN BUILDING CODE PLAN CHECK NOTES
NON-RESIDENTIAL BUILDINGS

1. State on plans that the outdoor lighting systems shall be designed and installed to comply with all of the following:
   a. The minimum requirements in California Energy Code for Lighting Zones 1-4
   b. Backlight, Uplight and Glare (BUG) ratings as defined in IESNA TM-15-11
   c. Allowable BUG ratings not exceeding those shown in on Table 5.106.8. (5.106.8)
2. Separate submeters shall be installed in any building or new space within a building that is projected to consume more than 1,000 gal/day. (5.303.1.2)
3. New plumbing fixtures and fittings shall not exceed the maximum allowable flow rate specified in Section 5.303.3. (5.303.3)
4. When a shower is served by more than one showerhead, the combined flow rate of all the showerheads and/or other shower outlets controlled by a single valve shall not exceed 2.0 gallons per minute at 80psi, or the shower shall be designed to only allow one showerhead to be in operation at a time. (5.303.3.3)
5. For projects that include landscape work, the *Landscape Certification*, Form GRN 12, shall be completed prior to final inspection approval. (State Assembly Bill No. 1881)
6. Installed automatic irrigation system controllers are weather- or soil-based controllers. (WMELO, § 492.7)
7. Weather-resistant exterior wall and foundation envelope shall be detailed in conformance with Los Angeles Building Code Section 1403.2 and California Energy Code Section 150. (5.407.1)
8. Automatic landscape irrigators shall be installed such that it doesn't spray on the structure. (5.407.2.1)
9. New exterior entries and openings subject to foot traffic shall be protected against water intrusion using features such as overhangs, awnings and/or recesses for a combined depth over the entry of at least 4 feet. (5.407.2.2.1)
10. Nonabsorbent interior floor and wall finishes shall be used within at least two feet around and perpendicular to new exterior entries and/or opening subject to foot traffic. (5.407.2.2.1)
11. Exterior entries shall have flashing integrated with the drainage plane. (5.407.2.2.2)
12. Only a City of Los Angeles certified hauler will be used for hauling of construction waste. (5.408.1)
13. 100% of excavated soil and vegetation resulting from land clearing shall be reused or recycled. (5.408.3)
14. A final report for the testing and adjusting of all new systems shall be completed and provided to the field inspector prior to final approval. This report shall be signed by the individual responsible for performing these services. (5.410.4.4)
15. For all new equipment, an *Operation & Systems Manual* shall be provided to the owner and the field inspector at the time of final inspection. (5.410.4.5)
16. All new gas fireplaces must be direct-vent, sealed combustion type. Wood burning fireplaces are prohibited per AQMD Rule 445. (5.503.1, AQMD Rule 445)
17. If the new HVAC system is used during construction, use return air filters with a MERV of 8. Replace all filters immediately prior to occupancy. (5.504.1.3)
18. All new ducts and other new related air distribution components openings shall be covered with tape, plastic, or sheet metal until the final startup of the heating, cooling and ventilating equipment. (5.504.3)
19. Architectural paints and coatings, adhesives, caulks and sealants shall comply with the Volatile Organic Compound (VOC) limits listed in Tables 5.504.4.1- 5.504.4.3. (5.504.4.1- 5.504.4.3)
20. The *VOC Content Verification Checklist*, Form GRN 2, shall be completed and verified prior to final inspection approval. The manufacturer's specifications showing VOC content for all applicable products shall be readily available at the job site and be provided to the field inspector for verification. (5.504.4.3.2)
21. All new carpet installed in the building interior meets the testing and product requirements of one of the following:
   a. Carpet and Rug Institute's Green Label Plus Program
   b. California Department of Public Health's Specification 01350
   c. NSF/ANSI 140 at the Gold level
   d. Scientific Certifications Systems Indoor Advantage™ Gold (5.504.4.4)
22. All new carpet cushion installed in the building interior shall meet the requirements of the Carpet and Rug Institute Green Label program. (5.504.4.4.1)
23. New hardwood plywood, particle board, and medium density fiberboard composite wood products used in the interior or exterior of the building shall meet the formaldehyde limits. (5.504.4.5, 10.504.4.5)
24. The *Formaldehyde Emissions Verification Checklist,* Form GRN 3, shall be completed prior to final inspection approval. The manufacturer's specifications showing formaldehyde content for all applicable wood products shall be readily available at the job site and be provided to the field inspector for verification. (5.504.4.5)
25. 80% of the total area receiving new resilient flooring shall comply with one or more of the following:
   a. VOC emission limits defined in the CHPS High Performance Products Database
   b. Certified under UL GREENGUARD Gold
   c. Certification under the Resilient Floor Covering Institute (RFCI) FloorScore program
   d. Meet the California Department of Public Health's Specification 01350 (5.504.4.6)
26. Mechanically ventilated buildings shall have air filter with a Minimum Efficiency Reporting Value (MERV) of 13 or higher. Filters shall be installed prior to occupancy and recommendations for maintenance with filters of the same value shall be included in the operation and maintenance manual. (5.504.5.3)
27. Designated outdoor smoking area shall be at least 25 feet from an outdoor air intake or operable windows. (5.504.7)
28. Buildings shall meet or exceed the provisions of California Building Code, CCR, Title 24, Part 2 Sections 1202 (Ventilation) and Chapter 14 (Exterior Walls). For additional measures, see Section 5.407.2 (5.505.1)
29. Buildings that use Demand Control Ventilation shall have CO_2 sensors and ventilation controls installed in accordance with the requirements of the current edition of the California Energy Code, CCR, Title 24, Part 6, Section 121(c). (5.506.2)
30. The HVAC, refrigeration, and fire suppression equipment shall not contain CFC or Halons. (5.508.1)
31. Retail food stores of 8,000 sq. ft. or more of conditioned area that have a commercial refrigeration system with a global warming potential (GWP) of 150 or greater shall have leak reduction measures in accordance with LAGBC Section 5.508.2. Separate mechanical plan check is required. (5.508.2)

As a covered entity under Title II of the Americans with Disabilities Act, the City of Los Angeles does not discriminate on the basis of disability and, upon request, will provide reasonable accommodation to ensure equal access to its programs, services and activities.

FORM GRN 16

PLUMBING FIXTURE FLOW RATES
Residential Occupancies
2020 Los Angeles Green Building Code
(Incorporate this form into the plans)

SECTION 4.303.1
WATER REDUCTION FIXTURE FLOW RATES

FIXTURE TYPE	MAXIMUM ALLOWABLE FLOW RATE
Showerheads	1.8 gpm @ 80 psi
Lavatory faucets, residential	1.2 gpm @ 60 psi[1,3]
Lavatory faucets, nonresidential	0.4 gpm @ 60 psi[1,3]
Kitchen faucets	1.5 gpm @ 60 psi[2,4]
Metering Faucets	0.2 gallons/cycle
Gravity tank type water closets	1.28 gallons/flush[5]
Flushometer tank water closets	1.28 gallons/flush[5]
Flushometer valve water closets	1.28 gallons/flush[5]
Urinals	0.125 gallons/flush
Clothes Washers	ENERGY-STAR certified
Dishwashers	ENERGY-STAR certified

[1] Lavatory Faucets shall not have a flow rate less than 0.8 gpm at 20 psi.
[2] Kitchen faucets may temporarily increase flow above the maximum rate, but not above 2.2gpm @ 60psi and must default to a maximum flow rate of 1.8 gpm @ 60psi.
[3] Where complying faucets are unavailable, aerators or other means may be used to achieve reduction.
[4] Kitchen faucets with a maximum 1.8 gpm flow rate may be installed in buildings that have water closets with a maximum flush rate of 1.06 gallons/flush installed throughout.
[5] Includes single and dual flush water closets with an effective flush of 1.28 gallons or less.
Single Flush Toilets - The effective flush volume shall not exceed 1.28 gallons (4.8 liters). The effective flush volume is the average flush volume when tested in accordance with ASME A112.19.233.2.
Dual Flush Toilets - The effective flush volume shall not exceed 1.28 gallons (4.8 liters). The effective flush volume is defined as the composite, average flush volume of two reduced flushes and one full flush. Flush volumes will be tested in accordance with ASME A112.19.2 and ASME A112.19.14.

As a covered entity under Title II of the Americans with Disabilities Act, the City of Los Angeles does not discriminate on the basis of disability and, upon request, will provide reasonable accommodation to ensure equal access to its programs, services and activities.

FORM GRN 17

PLUMBING FIXTURE FLOW RATES
Non-Residential Occupancies
2020 Los Angeles Green Building Code
(Incorporate this form into the plans)

SECTION 5.303.2
WATER REDUCTION FIXTURE FLOW RATES

FIXTURE TYPE	MAXIMUM ALLOWABLE FLOW RATE
Showerheads	1.8 gpm @ 80 psi
Lavatory faucets, residential	1.2 gpm @ 60 psi[1,3]
Lavatory Faucets, nonresidential	0.4 gpm @ 60 psi[1,3]
Kitchen faucets	1.5 gpm @ 60 psi[2,4,5]
Wash fountains	1.8 gpm for every 20 in. of rim space @60 psi
Metering faucets	0.2 gallons/cycle
Metering faucets for wash fountains	0.2 gpm for every 20 in. of rim space @ 60 psi
Gravity tank type water closets	1.28 gallons/flush[6]
Flushometer tank water closets	1.28 gallons/flush[6]
Flushometer valve water closets	1.28 gallons/flush[6]
Urinals	0.125 gallons/flush
Clothes Washers	ENERGY-STAR certified
Dishwashers	ENERGY-STAR certified

[1] Lavatory faucets shall not have a flow rate less than 0.8 gpm at 20 psi.
[2] Kitchen faucets may temporarily increase flow above the maximum rate, but not above 2.2gpm @ 60psi and must default to a maximum flow rate of 1.8 gpm @ 60psi.
[3] Where complying faucets are unavailable, aerators or other means may be used to achieve reduction.
[4] Kitchen faucets with a maximum 1.8 gpm flow rate may be installed in buildings that have water closets with a maximum flush rate of 1.06 gallons/flush installed throughout
[5] This requirement does not apply to faucets in commercial kitchens.
[6] Includes single and dual flush water closets with an effective flush of 1.28 gallons or less.
Single Flush Toilets - The effective flush volume shall not exceed 1.28 gallons (4.8 liters). The effective flush volume is the average flush volume when tested in accordance with ASME A112.19.233.2.
Dual Flush Toilets - The effective flush volume shall not exceed 1.28 gallons (4.8 liters). The effective flush volume is defined as the composite, average flush volume of two reduced flushes and one full flush. Flush volumes will be tested in accordance with ASME A112.19.2 and ASME A112.19.14.

As a covered entity under Title II of the Americans with Disabilities Act, the City of Los Angeles does not discriminate on the basis of disability and, upon request, will provide reasonable accommodation to ensure equal access to its programs, services and activities.

FORM GRN 18N

2020 Los Angeles Green Building Code

WATER CONSERVATION ORDINANCE NOTES
NON-RESIDENTIAL BUILDINGS

1. For new buildings or additions exceeding 50,000 ft², install a separate water meter or sub-meter for the following areas:
   A. For each individual leased, rented, or other tenant space within the building projected to consume more than 100 gpd (380 L/day).
   B. Where potable water is used for industrial/process uses, for water supplied to the following subsystems:
      a. Makeup water for cooling towers where flow through is greater than 500 gpm (30 L/s).
      b. Makeup water for evaporative coolers greater than 6 gpm (0.04 L/s).
      c. Steam and hot-water boilers with energy input more than 500,000 Btu/h (147 kW).
   C. For each building that uses more than 100 gpd on a parcel containing multiple buildings. (5.303.1.1)
2. Provide a 20% reduction in the overall potable water use for each building. The reduction shall be based on the maximum allowable water use per plumbing fixture and fittings as required by the Los Angeles Plumbing Code. New projects having a water supply of 2"or less and additions and alterations projects may use the prescriptive method outlined in this section. (5.303.2)
3. A water budget for landscape irrigation use that conforms to the California Department of Water Resources' Model Water Efficient Landscape Ordinance (MWELO) is required for new landscape areas of 500 sqft or more. The following methods to reduce potable water use in landscape areas include, but are not limited to, use of captured rainwater, recycled water, graywater, or water treated for irrigation purposes and conveyed by a water district or public entity. (5.304.1, 5.304.2)
4. New buildings on a site with 1,000 square feet or more of cumulative landscape area shall have separate meters or submeters for outdoor water use. (5.304.4)
5. Additions and alterations on a site with 1,000 square feet of cumulative landscape area which require water service upgrade shall have separate meters or submeters for outdoor water use. (5.304.4)
6. Locks shall be installed on all publicly accessible exterior faucets and hose bibs. (5.304.5)
7. Except as provided in this section, for sites with over 500 square feet of landscape area, alternate waste piping shall be installed to permit discharge from the clothes washer, bathtub, showers, and bathroom/restrooms wash basins to be used for a future graywater irrigation system (5.305.1)
8. Except as provided in this section, where City-recycled water is available within 200 feet of the property line, water closets, urinals, floor drains, and process cooling and heating in the building shall be supplied from recycled water and shall be installed in accordance with the Los Angeles Plumbing Code. (5.305.2)
9. Cooling towers shall comply with one of the following:
   A. Shall have a minimum of 6 cycles of concentration (blowdown)
   B. A minimum of 50% of the makeup water supply to the cooling towers shall come from non-potable water sources, including treated backwash. (5.305.3)
10. Develop and construct a system for onsite reuse of the groundwater where groundwater is being extracted and discharged. Alternatively, the groundwater may be discharged to the sewer. (5.305.4)
11. Provide a hot water system complying with one of the following:
   A. The hot water system shall not allow more than 0.6 gallons of water to be delivered to any fixture before hot water arrives.
   B. Where a hot water recirculation or electric resistance heat trace wire system is installed, the branch from the recirculating loop or electric resistance heat trace wire to the fixture shall contain a maximum of 0.6 gallons. (Los Angeles Plumbing Code Section 610.4.1)

As a covered entity under Title II of the Americans with Disabilities Act, the City of Los Angeles does not discriminate on the basis of disability and, upon request, will provide reasonable accommodation to ensure equal access to its programs, services and activities.

NOT FOR CONSTRUCTION

17.NOV.2021
100% DESIGN SUBMITTAL

ba
belzberg architects
2740 MAIN STREET
SANTA MONICA, CA 90405
310.453.9611
www.belzbergarchitects.com

#	DESCRIPTION	DATE

HOLOCAUST MUSEUM LA EXPANSION

100 THE GROVE DRIVE
LOS ANGELES, CA 90036

GREEN BUILDING FORMS

PROJECT NUMBER: 17009

G020

11/18/2021 3:09:16 PM

LA DBS DEPARTMENT OF BUILDING AND SAFETY

2020 Los Angeles Green Building Code

FORM GRN 18R

WATER CONSERVATION NOTES - ORDINANCE #184248

RESIDENTIAL BUILDINGS

PLUMBING SYSTEM

1. Multi-family dwellings not exceeding three stories and containing 50 units or less shall install a separate meter or submeter within common areas and within each individual dwelling unit. (4.303.3)
2. Water use reduction shall be met by complying with one of the following:
   A. Provide a 20% reduction in the overall potable water use within the building. The reduction shall be based on the maximum allowable water use for plumbing fixtures and fittings as required by the Los Angeles Plumbing Code. Calculations demonstrating a 20% reduction in the building "water use baseline", as established in Table 4.303.4.1, shall be provided; or
   B. New fixtures and fittings shall comply with the maximum flow rates shown in Table 4.303.4.2, or
   C. Plumbing fixtures shall use recycled water.

   Exception: Fixture replacements (4.303.4)
3. New building on a site with 500 square feet or more of cumulative landscape area shall have separate meters or submeters for outdoor water use. (4.304.3)
4. Additions and alterations on a site with 500 square feet or more of cumulative landscape area and where the entire potable water system is replaced, shall have separate meters or submeters for outdoor water use. (4.304.3)
5. In other than single family dwellings, locks shall be installed on all publicly accessible exterior faucets and hose bibs. (4.304.4)
6. Provide a cover having a manual or power-operated reel system in any permanently installed outdoor in-ground swimming pool or spa in one- and two-family dwellings. For irregular-shaped pools where it is infeasible to cover 100% of the pool due to its irregular shape, a minimum of 80% of the pool shall be covered. (4.304.5)
7. Except as provided in this section, for sites with over 500 square feet of landscape area, alternate waste piping shall be installed to permit discharge from the clothes washer, bathtub, showers, and bathroom/restrooms wash basins to be used for a future graywater irrigation system. (4.305.1)
8. Except as provided in this section, where City-recycled water is available within 200 feet of the property line, water closets, urinals, floor drains, and process cooling and heating in the building shall be supplied from recycled water and shall be installed in accordance with the Los Angeles Plumbing Code. (4.305.2)
9. In new buildings of 25 stories or less, the cooling towers shall comply with one of the following:
   A. Shall have a minimum of 6 cycles of concentration (blowdown); or
   B. A minimum of 50% of the makeup water supply to the cooling towers shall come from non-potable water sources, including treated backwash. (4.305.3.1)
10. In new buildings over 25 stories, the cooling towers shall comply with all of the following:
    A. Shall have a minimum of 6 cycles of concentration (blowdown); and
    B. 100% of the makeup water supply to the cooling towers shall come from non-potable water sources, including treated backwash. (4.305.3.2)
11. Where groundwater is being extracted and discharged, develop and construct a system for onsite reuse of the groundwater. Alternatively, the groundwater may be discharged to the sewer. (4.305.4)
12. Provide a hot water system complying with one of the following (Los Angeles Plumbing Code Section 610.4.1):
    A. The hot water system shall not allow more than 0.6 gallons of water to be delivered to any fixture before hot water arrives.
    B. Where a hot water recirculation or electric resistance heat trace wire system is installed, the branch from the recirculating loop or electric resistance heat trace wire to the fixture shall contain a maximum of 0.6 gallons.
    C. Residential units having individual water heaters shall have a compact hot water system that meets all of the following:
       a. The hot water supply piping from the water heater to the fixtures shall take the most direct path.
       b. The total developed length of pipe from the water heater to farthest fixture shall not exceed the distances specified in Table 3.6.5 of the California Energy Code Residential Appendix.
       c. The hot water supply piping shall be installed and insulated in accordance with Section RA3.6.2 of the California Energy Code Residential Appendix.

IRRIGATION SYSTEM

12. A water budget for landscape irrigation use that conforms to the California Department of Water Resources' Model Water Efficient Landscape Ordinance (MWELO) is required for new landscape areas of 500 sq. ft. or more. The following methods to reduce potable water use in landscape areas include, but are not limited to, use of captured rainwater, recycled water, graywater, or water treated for irrigation purposes and conveyed by a water district or public entity. (4.304.1)

As a covered entity under Title II of the Americans with Disabilities Act, the City of Los Angeles does not discriminate on the basis of disability and, upon request, will provide reasonable accommodation to ensure equal access to its programs, services and activities.

LA DBS DEPARTMENT OF BUILDING AND SAFETY

Owner's Project Requirements (OPR) Compliance Form

2020 Los Angeles Green Building Code
and 2019 California Energy Code

FORM GRN 20

COMPLETE AND INCORPORATE THIS FORM INTO THE PLANS

Project Address: _____ Permit Number: _____ - _____ - _____

ITEM #	OPR ITEMS	PAGE NUMBER IN OPR DOCUMENT
	PROJECT PROGRAM	
1	General building information (size, stories, construction type, occupancy type and number)	
2	Intended uses and schedules	
3	Future expandability and flexibility of spaces	
4	Quality and/or durability of materials and desired building lifespan	
5	Budget or operation constraints	
	ENVIRONMENTAL AND SUSTAINABILITY GOALS	
6	Level of compliance with the Los Angeles Green Building Code: Mandatory, Tier 1, or Tier 2	
7	Specific environmental or sustainability goals (e.g. water efficiency, water reuse, CO_2 monitoring, xeriscaping, etc.)	
	ENERGY EFFICIENCY GOALS	
8	Overall efficiency of building: meet California Energy Code or exceed by (%)	
9	Lighting system efficiency: meet California Energy Code or exceed by (%)	
10	HVAC equipment efficiency and characteristics	
11	Other measures affecting energy efficiency desired by owner (e.g. building orientation, shading, envelope and fenestration, roof, renewable power, net-zero energy use, etc.)	
	INDOOR ENVIRONMENTAL QUALITY REQUIREMENTS	
12	Lighting	
13	Temperature and Humidity	
14	Acoustics	
15	Air quality, ventilation, and filtration	
16	Desired adjustability of system controls	
17	Accommodations for after-hours use	
18	Other owner requirements (e.g. natural ventilation, daylight, views, etc.)	

As a covered entity under Title II of the Americans with Disabilities Act, the City of Los Angeles does not discriminate on the basis of disability and, upon request, will provide reasonable accommodation to ensure equal access to its programs, services and activities.

	EQUIPMENT AND SYSTEMS EXPECTATIONS	
19	Level of quality, reliability, equipment type, flexibility, maintenance, and complexity desired	
20	Specific efficiency targets, desired technologies, or preferred manufacturers for building systems, acoustics and vibration	
21	Degree of system integration, automation, and functionality for controls (i.e. load shedding, demand response, energy management)	
	BUILDING OCCUPANT AND O&M PERSONNEL EXPECTATIONS	
22	Description of how the building will be operated and by whom	
23	Level of training and orientation required to understand, operate and use the building systems for building operation and maintenance staff, as well as occupants	
24	Building operation and maintenance staff location and capabilities	
	COMMISSIONING AGENT INFORMATION	
25	Name of Commissioning Agency:	
26	Address of Agency:	
27	Contact person(s) Name(s):	

Owner/Owner Representative Acknowledgement

Owner's Project Requirements (OPR). The expectations and requirements of the building appropriate to its phase shall be documented before the design phase of the project begins. The OPR includes the elements listed above and have been approved by the Owner or Owner Representative.

Name: _____ ☐ Owner ☐ Owner Representative

Company Name (if applicable): _____

Signature: _____ Date: _____

As a covered entity under Title II of the Americans with Disabilities Act, the City of Los Angeles does not discriminate on the basis of disability and, upon request, will provide reasonable accommodation to ensure equal access to its programs, services and activities.

LA DBS DEPARTMENT OF BUILDING AND SAFETY

Basis of Design (BOD) Compliance Form

2020 Los Angeles Green Building Code
and 2019 California Energy Code

FORM GRN 21

COMPLETE AND INCORPORATE THIS FORM INTO THE PLANS

Project Address: _____ Permit Number: _____ - _____ - _____

ITEM #	BOD ITEMS	PAGE NUMBER IN BOD DOCUMENT
	HVAC SYSTEMS AND CONTROLS	
1	Narrative description of system (i.e. system type(s), location, control type, efficiency features, outdoor air ventilation strategy, indoor air quality features, noise reduction features, environmental benefits, other features)	Page 21-24
2	Description of how the system meets requirements in OPR	Page 21
3	Reasons for system selection, as opposed to alternatives (e.g. comfort performance, efficiency, reliability, cost, acoustics, etc.)	Page 23
4	Load calculations (i.e. method/software, summer outdoor conditions, winter outdoor conditions, indoor design conditions, assumptions, other)	Page 24
5	Sequence of Operations (i.e. operating schedules, setpoints, other)	Page 24
	INDOOR LIGHTING SYSTEM	
6	Narrative Description of system (e.g. fixture type(s), lamp & ballast type, control type, etc.)	Page 32-33
7	Description of how the system meets requirements in OPR	Page 32-33
8	Reasons for system selection, as opposed to alternatives (e.g. visual comfort performance, efficiency, reliability, flexibility, simplicity, cost, etc.)	Page 32-33
9	Lighting Design Criteria (i.e. space ID, space type, illumination design target, source of target, light calculation assumptions, other)	Page 32
10	Lighting Power Design Target (i.e. space type, Title 24-Energy Code lighting power allowance, lighting power design target, other)	Page 22
	WATER HEATING SYSTEM	
11	Narrative description of system (i.e. system type, location, control type, efficiency features, environmental benefits, other)	Page 37
12	Description of how the system meets requirements in OPR	Page 37
13	Reasons for system selection, as opposed to alternatives (e.g. performance, efficiency, reliability, space constraints, cost, ease of maintenance, other)	Page 37
14	Water heating load calculations: sizing calculation method, assumptions, and results	Page 37
	LANDSCAPE IRRIGATION SYSTEMS	
15	Narrative description of system (i.e. system type(s), location, control type, performance, efficiency, water savings, other)	TBC
16	Description of how the system meets requirements in OPR	TBC
17	Reasons for system selection, as opposed to alternatives (e.g. performance, efficiency, reliability, flexibility, cost, utility company incentives, other)	TBC
18	Landscape irrigation system calculations: sizing calculation method, assumptions, and results	TBC
	COVERED PROCESSES	
19	Narrative description of system (i.e. system type(s), location, control type,	N/A

As a covered entity under Title II of the Americans with Disabilities Act, the City of Los Angeles does not discriminate on the basis of disability and, upon request, will provide reasonable accommodation to ensure equal access to its programs, services and activities.

	performance, efficiency, savings, other)	
20	Description of how the system meets requirements in OPR	N/A
21	Reasons for system selection, as opposed to alternatives (e.g. performance, efficiency, reliability, flexibility, simplicity, expandability, cost, payback period, utility company incentives, owner preference, etc.)	N/A
22	Sequence of Operation (e.g. operating schedules, setpoints, storage capacity, etc…)	N/A
	RENEWABLE ENERGY SYSTEMS (IF ANY)	
23	Narrative description of system (i.e. system type(s), location, inverter type, control type, performance, efficiency, energy savings, payback period, other)	Solar ready only.
24	Description of how the system meets requirements listed in OPR	Solar ready only.
25	Reasons for system selection, as opposed to alternatives (e.g. performance, efficiency, reliability, flexibility, simplicity, expandability, cost, payback period, etc.)	N/A
26	Renewable energy system generation calculations: sizing calculation method, assumptions, and results	N/A
	WATER REUSE SYSTEM (IF ANY)	
27	Narrative description of system (i.e. system type(s), location, space requirements, equipment requirements, control type, performance, efficiency, potable water savings, payback period, other)	N/A
28	Description of how the system meets requirements in OPR	N/A
29	Reasons for system selection, as opposed to alternatives (e.g. performance, efficiency, reliability, flexibility, simplicity, cost, payback period, etc.)	N/A
30	Water reuse system calculations: sizing calculation method, assumptions, and results	N/A

Architect/Engineer/Designer Acknowledgement

I hereby acknowledge the Basis of Design (BOD) document has been completed and meets the Owner's Project Requirements (OPR).

	Name	License Number	Signature	Date
Architect of Record				
Mechanical Designer				
Electrical Designer				
Plumbing Designer				
Landscape Architect				
Renewable Energy System Designer				
Others (specify):				

As a covered entity under Title II of the Americans with Disabilities Act, the City of Los Angeles does not discriminate on the basis of disability and, upon request, will provide reasonable accommodation to ensure equal access to its programs, services and activities.

LA DBS DEPARTMENT OF BUILDING AND SAFETY

Basis of Design (BOD) Compliance Form

2020 Los Angeles Green Building Code
and 2019 California Energy Code

FORM GRN 21

Commissioning Agent Acknowledgement

I have reviewed the Basis of Design (BOD) and verified that it meets the Owner's Project Requirements (OPR):

Name: _____

Company Name (if applicable): _____

Agent's Signature: _____ Date: _____

As a covered entity under Title II of the Americans with Disabilities Act, the City of Los Angeles does not discriminate on the basis of disability and, upon request, will provide reasonable accommodation to ensure equal access to its programs, services and activities.

LA DBS DEPARTMENT OF BUILDING AND SAFETY

Commissioning Measures In Construction Documents

2020 Los Angeles Green Building Code
and 2019 California Energy Code

FORM GRN 22

COMPLETE AND INCORPORATE THIS FORM INTO THE PLANS

Project Address: _____ Permit Number: _____ - _____ - _____

ITEM #	Commissioning Measures Items
1	Measures shown in the specifications and cross referenced
2	List of commissioned equipment and systems
3	Cx roles and responsibilities of all parties
4	Meeting requirements
5	Commissioning schedule management procedures
6	Procedures for addressing outstanding issues or non-compliance
7	Requirements for execution and documentation of installation and equipment start up
8	Specific testing requirements for each system type
9	Submittal review and approval requirements
10	Contents and approval process of the commissioning plan
11	Cx documentation and reporting requirements
12	Facility staff training requirements and verification procedures
13	O & M manual review and approval procedures
14	Systems manual development and approval procedures
15	Definitions

Commissioning Agent Acknowledgment

I have reviewed the applicable construction documents listed above and verified their compliance with the owner's project requirements, basis of design, and commissioning plan.

Name: _____

Company Name (if applicable): _____

Agent's signature: _____ Date: _____

As a covered entity under Title II of the Americans with Disabilities Act, the City of Los Angeles does not discriminate on the basis of disability and, upon request, will provide reasonable accommodation to ensure equal access to its programs, services and activities.

NOT FOR CONSTRUCTION

17.NOV.2021
100% DESIGN SUBMITTAL

belzberg architects
2740 MAIN STREET
SANTA MONICA, CA 90405
310.453.9611
www.belzbergarchitects.com

#	DESCRIPTION	DATE

HOLOCAUST MUSEUM LA EXPANSION

100 THE GROVE DRIVE
LOS ANGELES, CA 90036

GREEN BUILDING FORMS

PROJECT NUMBER: 17009

G021

11/18/2021 3:09:17 PM

Commissioning Plan Compliance Form

2020 Los Angeles Green Building Code
and 2019 California Energy Code

FORM GRN 23

COMPLETE AND INCORPORATE THIS FORM INTO THE PLANS

Project Address: _____ Permit Number: _____ - _____ - _____

ITEM #	COMMISSIONING PLAN ITEMS	PAGE NUMBER IN COMMISSIONING PLAN DOCUMENT
	GENERAL PROJECT INFORMATION	
1	Project name, owner, location, building type and building area	
2	Definitions	
3	Overall project commissioning schedule	
4	Contact information for individual/company providing commissioning services	
	COMMISSIONING GOALS	
5	Meeting the Los Angeles Green Building code and California Energy Code requirements for commissioning	
6	Meeting OPR and BOD requirements	
7	Carrying out requirements for commissioning activities as specified in plans and specifications	
	SYSTEMS TO BE COMMISSIONED	
8	Explanation of the original design intent (refer to OPR and BOD documents)	
9	Requirements for execution and documentation of installation, checkout and start up, including controls point-to-point checks and calibrations	
10	Equipment and systems to be tested*, functions and modes to be tested, conditions under which the test shall be performed, measurable criteria for acceptable performance, and example test forms	
	COMMISSIONING TEAM INFORMATION	
11	List of all team members and contact information (i.e. owner, owner's representative, architect, engineers, designated commissioning representative, and (if available): general contractor, sub-contractors, vendors, and construction manager)	
	COMMISSIONING PROCESS ACTIVITIES, SCHEDULES, AND RESPONSIBILITIES	
12	Prescribed commissioning process steps and activities to be accomplished by the Cx team throughout the design to occupancy	
13	Roles and responsibilities for each member of the Cx team for each phase of the work (including who writes checklists and tests, who reviews and approves test forms, who directs tests, who executes tests, who documents tests results and who approves completed tests)	
14	Required Cx deliverables, reports, forms, and verifications expected at each stage of the commissioning effort	

As a covered entity under Title II of the Americans with Disabilities Act, the City of Los Angeles does not discriminate on the basis of disability and, upon request, will provide reasonable accommodation to ensure equal access to its programs, services and activities.

15	Confirmation, development and approval process for the O&M manual, systems manual and the facility operator and maintenance staff training	

**At a minimum, the following systems shall be tested: HVAC & controls, indoor lighting system & controls, water heating system, landscape irrigation systems, covered processes, renewable energy systems, and water reuse systems.*

Owner/Owner Representative Acknowledgement

The commissioning plan includes the items listed above and have been approved by the Owner or Owner Representative:

Name: _____ ☐ Owner ☐ Owner Representative

Company Name (if applicable): _____

Signature: _____ Date: _____

As a covered entity under Title II of the Americans with Disabilities Act, the City of Los Angeles does not discriminate on the basis of disability and, upon request, will provide reasonable accommodation to ensure equal access to its programs, services and activities.

NOT FOR CONSTRUCTION

17.NOV.2021
100% DESIGN SUBMITTAL

belzberg architects
2740 MAIN STREET
SANTA MONICA, CA 90405
310.453.9611
www.belzbergarchitects.com

#	DESCRIPTION	DATE

HOLOCAUST MUSEUM LA EXPANSION

100 THE GROVE DRIVE
LOS ANGELES, CA 90036

GREEN BUILDING FORMS

PROJECT NUMBER: 17009

G022

11/18/2021 3:09:17 PM

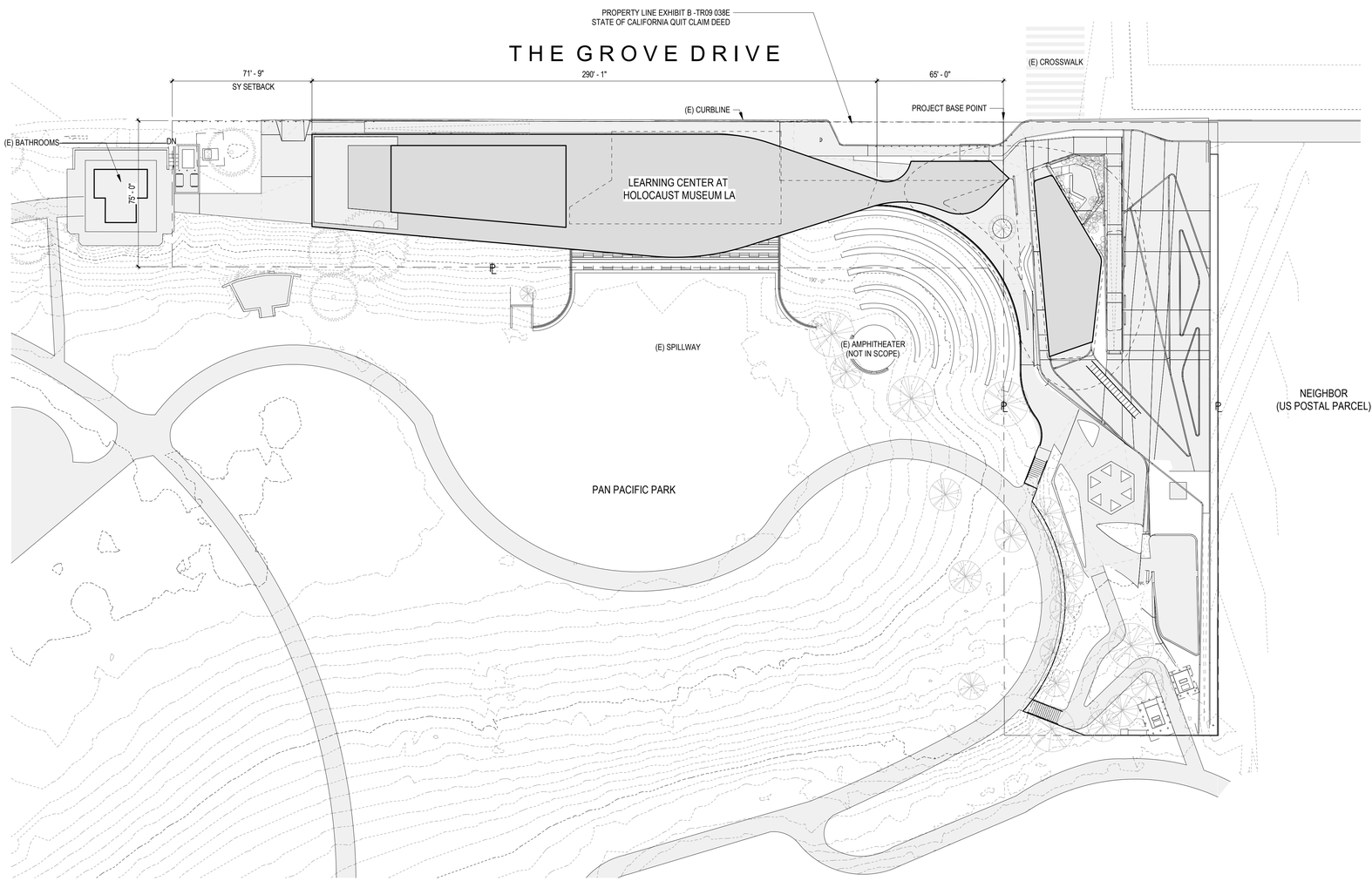

PLOT PLAN 1
SCALE: 1/32" = 1'-0"
NORTH

VICINITY MAP

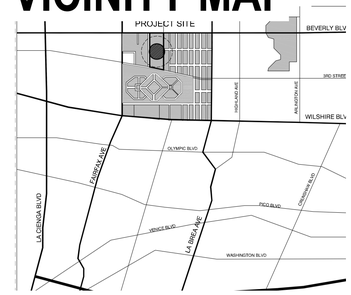

100 THE GROVE DRIVE, LOS ANGELES, CA 90036

PROJECT DESCRIPTION:
PERMIT APPLICATION #200014-10000-05704
NEW ROOF CANOPY AND ADDITION/REMODEL OF EXISTING TYPE II-A CONSTRUCTION

PROPERTY INFORMATION:

APN	5512004905 / 5512004909
LEGAL DESCRIPTION	BLOCK / LOT - NONE RANCHO LA BREA TRACT
CURRENT ZONING	OS-1XL-O
CURRENT LAND USE DESIGNATION	OPEN SPACE
COMMUNITY PLAN	WILSHIRE
SPECIFIC PLAN	CENTRAL
SUBAREA	MID CITY WEST
COUNCIL DISTRICT	CD 4 - NITHYA RAMAN
EXISTING LOT AREA	36,189 SF
NEW PARCEL AREA	35,625 SF
GROSS LOT AREA	**71,814 SF**
FAR ALLOWED	XX
BUILDING AREA ALLOWED (FAR)	XX
FAR PROPOSED	**XX**
EXISTING MUSEUM (GROSS)	13,157 SF
PROPOSED ADDITION (GROSS)	2,061 SF
PROPOSED CANOPY (GROSS)	2,647 SF
PROPOSED BUILDING (GROSS)	14,163 SF

** SEE SHEET G030 FOR DETAILED FLOOR AREA CALCULATIONS*

PROJECT INFORMATION:

HEIGHT ALLOWED (W/VARIED ROOFLINE)	NONE
HEIGHT PROPOSED	**40'-0"**
STORIES ALLOWED	NOT SPECIFIED
STORIES PROPOSED	**1**

NEW ROOF CANOPY

SETBACKS	FRONT		SIDE	REAR
REQUIRED	NONE		NONE	NONE
PROVIDED	**6'-3**		**6'-3" / 119'-5"**	**6'-9"**
SOURCE	SPECIFIC PLAN	LAMC	LAMC	

ADDITION/REMODEL

SETBACKS	FRONT		SIDE	REAR
REQUIRED	NONE		NONE	NONE
PROVIDED	**XX**		**XX**	**XX**
SOURCE	SPECIFIC PLAN	LAMC	LAMC	

OPEN SPACE

REQUIRED	0 SF
PROVIDED (COMMON)	**1486 SF** OUTDOOR DECK

PARKING:

REQUIRED	104 SPACES
PROVIDED	104 SPACES (28 ON SITE)

NOT FOR CONSTRUCTION

17.NOV.2021
100% DESIGN SUBMITTAL

ba
belzberg architects
2740 MAIN STREET
SANTA MONICA, CA 90405
310.453.9611
www.belzbergarchitects.com

#	DESCRIPTION	DATE

HOLOCAUST MUSEUM LA EXPANSION

100 THE GROVE DRIVE
LOS ANGELES, CA 90036

PLOT PLAN / SITE INFORMATION

PROJECT NUMBER: 17009

G030

11/19/2021 1:34:09 PM

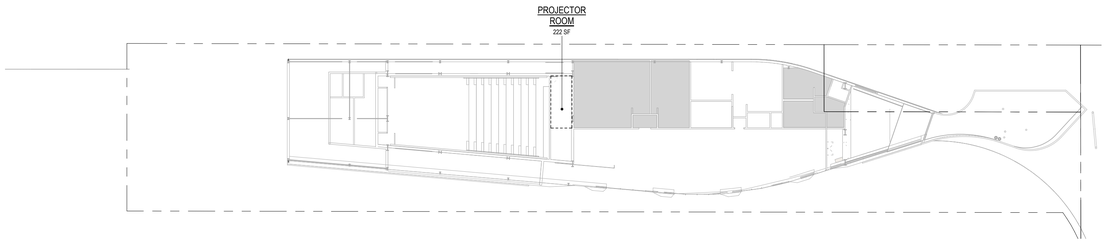

02 MEZZANINE 5
SCALE: 1/32" = 1'-0"

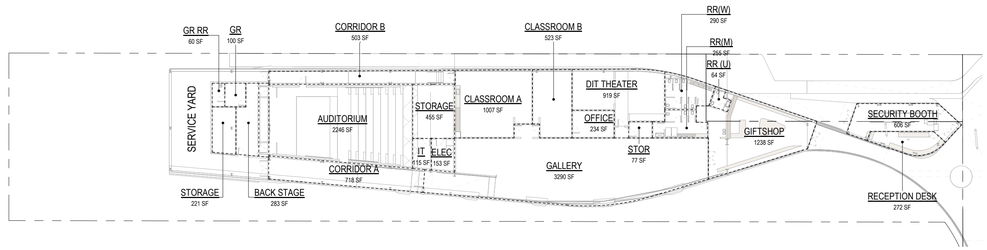

01 GALLERY 4
SCALE: 1/32" = 1'-0"

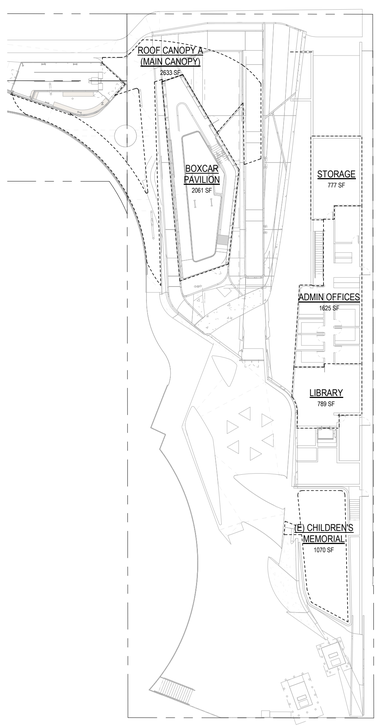

EX02 2
SCALE: 1/32" = 1'-0"

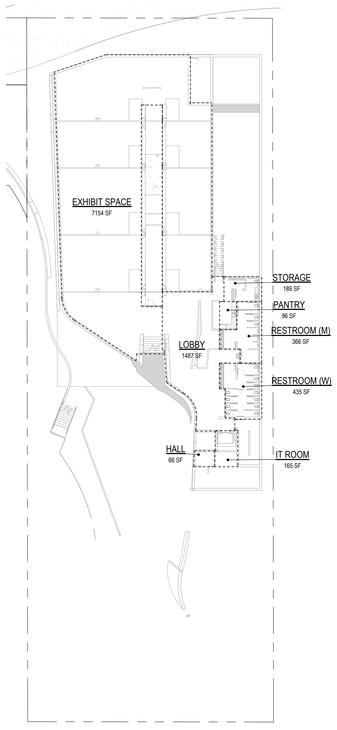

EX01 1
SCALE: 1/32" = 1'-0"
NORTH

AREA SCHEDULE / FAR CALCULATION EXISTING		
LEVEL	NAME	AREA
EX01	EXHIBIT SPACE	7154 SF
EX01	STORAGE	189 SF
EX01	PANTRY	96 SF
EX01	RESTROOM (M)	366 SF
EX01	RESTROOM (W)	435 SF
EX01	IT ROOM	165 SF
EX01	HALL	66 SF
EX01	LOBBY	1487 SF
		9958 SF
EX02	STORAGE	777 SF
EX02	ADMIN OFFICES	1625 SF
EX02	LIBRARY	789 SF
		3191 SF
GRAND TOTAL		13149 SF

AREA SCHEDULE / FAR CALCULATION ADDITION		
LEVEL	NAME	AREA
EX02	BOXCAR PAVILION	2061 SF
GRAND TOTAL		2061 SF

AREA SCHEDULE / FAR CALCULATION NEW		
LEVEL	NAME	AREA
01 GALLERY	SECURITY BOOTH	606 SF
01 GALLERY	GALLERY	3290 SF
01 GALLERY	CLASSROOM A	1007 SF
01 GALLERY	CLASSROOM B	523 SF
01 GALLERY	DIT THEATER	919 SF
01 GALLERY	OFFICE	234 SF
01 GALLERY	STOR	77 SF
01 GALLERY	RR(M)	255 SF
01 GALLERY	RR(W)	290 SF
01 GALLERY	GIFTSHOP	1238 SF
01 GALLERY	STORAGE	455 SF
01 GALLERY	GR	100 SF
01 GALLERY	GR RR	60 SF
01 GALLERY	CORRIDOR B	503 SF
01 GALLERY	CORRIDOR A	718 SF
01 GALLERY	RECEPTION DESK	272 SF
01 GALLERY	AUDITORIUM	2246 SF
01 GALLERY	STORAGE	221 SF
01 GALLERY	BACK STAGE	283 SF
01 GALLERY	ELEC	153 SF
01 GALLERY	IT	115 SF
01 GALLERY	RR (U)	64 SF
02 MEZZANINE	PROJECTOR ROOM	222 SF
~~GRAND TOTAL~~		~~13848 SF~~

AREA SCHEDULE / FAR CALCULATION CANOPY A		
LEVEL	NAME	AREA
EX02	ROOF CANOPY A (MAIN CANOPY)	2633 SF
		2633 SF
GRAND TOTAL		2633 SF

FLOOR AREA SUMMARY:

EXISTING LOT SIZE:	36,189 SF
NEW PARCEL:	35,625 SF
TOTAL LOT SIZE:	71,813 SF
TOTAL (FROM ABOVE):	33,317 SF
PROPOSED F.A.R.:	0.46

NOT FOR CONSTRUCTION

17.NOV.2021
100% DESIGN SUBMITTAL

ba
belzberg architects
2740 MAIN STREET
SANTA MONICA, CA 90405
310.453.9611
www.belzbergarchitects.com

#	DESCRIPTION	DATE

HOLOCAUST MUSEUM LA EXPANSION

100 THE GROVE DRIVE
LOS ANGELES, CA 90036

FLOOR AREA PLANS

PROJECT NUMBER: 17009

G040

11/19/2021 3:10:04 PM

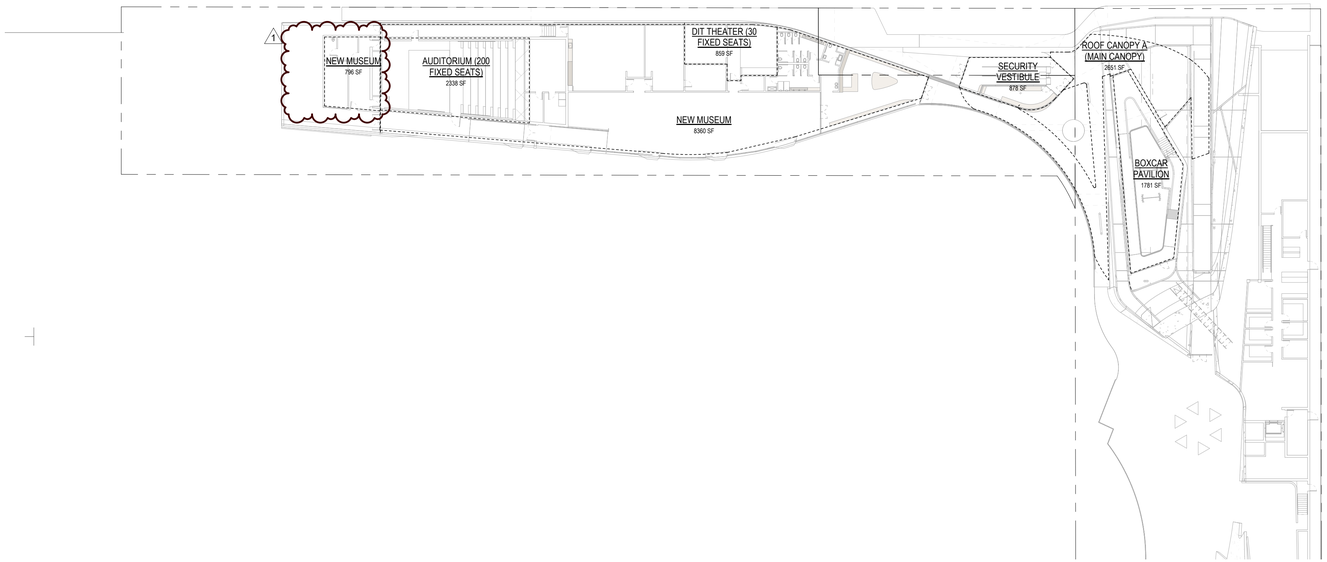

01 GALLERY FLOOR AREA 4
SCALE: 1/32" = 1'-0"
NORTH

AREA SCHEDULE (PARKING)						
SORT	NAME	AREA	SF PER CAR	NOTES	PARKING REQ.	PARKING PROPOSED
EXISTING	EXISTING MUSEUM	9966 SF	500 SF		19.93	20
EXISTING	EXISTING OFFICE	3191 SF	500 SF		6.38	6
		13157 SF				26
ADDITION	BOXCAR PAVILION	1781 SF	500 SF		3.56	4
		1781 SF				4
NEW	AUDITORIUM (200 FIXED SEATS)	2338 SF	0 SF	1 PER 5 FIXED SEATS		40
NEW	DIT THEATER (30 FIXED SEATS)	859 SF	0 SF	1 PER 5 FIXED SEATS		6
NEW	NEW MUSEUM	8360 SF	500 SF		16.72	17
NEW	NEW MUSEUM	796 SF	500 SF		1.59	2
NEW	PROJECTOR ROOM	246 SF	500 SF		0.49	1
NEW	SECURITY VESTIBULE	878 SF	500 SF		1.76	2
		13477 SF				68
ROOF CANOPY	ROOF CANOPY A (MAIN CANOPY)	2651 SF	500 SF		5.30	5
		2651 SF				5
TOTAL PARKING PROVIDED		31067 SF				103

*NOTE: ALL PARKING FOR NEW SQUARE FOOTAGE TO BE PROVIDED OFFSITE.
EXISTING MUSEUM PROVIDES 28 SPACES, THEREFORE 75 SPACES MIN REQUIRED OFFSITE.
SEE G046 G047 FOR AGREEMENT FOR OFFSITE PARKING

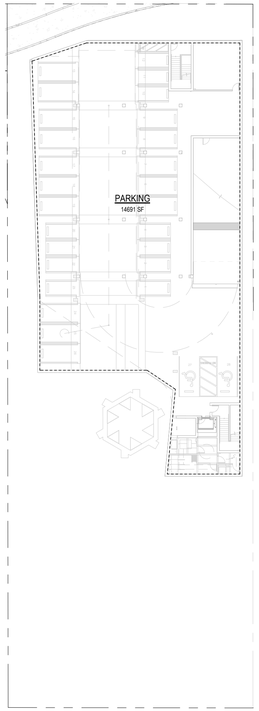

EX00 FLOOR AREA 3
SCALE: 1/32" = 1'-0"
NORTH

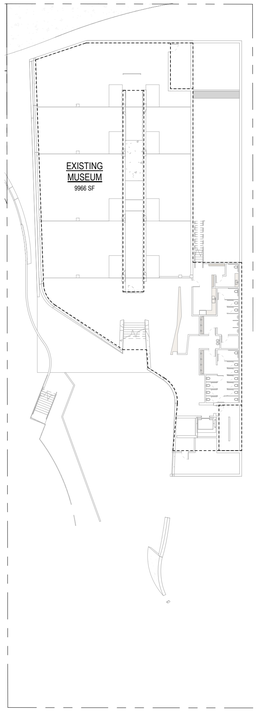

EX01 FLOOR AREA 2
SCALE: 1/32" = 1'-0"
NORTH

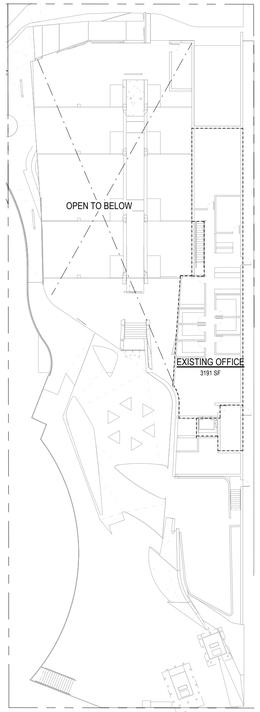

EX02 FLOOR AREA 1
SCALE: 1/32" = 1'-0"
NORTH

NOT FOR CONSTRUCTION

17.NOV.2021
100% DESIGN SUBMITTAL

ba
belzberg architects
2740 MAIN STREET
SANTA MONICA, CA 90405
310.453.9611
www.belzbergarchitects.com

#	DESCRIPTION	DATE
1	P.C. VERIF 1	12/10/2021

HOLOCAUST MUSEUM LA EXPANSION

100 THE GROVE DRIVE
LOS ANGELES, CA 90036

PARKING AREA PLANS

PROJECT NUMBER: 17009

G045

11/18/2021 3:10:11 PM

DocuSign Envelope ID: 3D171C33-16A3-4D75-9129-9DAE9AEF4379

LICENSE AGREEMENT
Los Angeles Museum of the Holocaust (The Grove)

This License Agreement (this "**Agreement**") is made as of May 27, 2021, by and between The Grove, LLC, a Delaware limited liability company registered to do business in California as GFM, LLC ("**Licensor**"), and Holocaust Museum LA ("**Licensee**"), with respect to the following facts:

A. Licensor owns a ground lease interest in and operates the retail shopping center known as "The Grove" located in Los Angeles, California (the "**Center**").

B. Licensee operates the Holocaust Museum adjacent to the Center. Licensee desires to utilize a portion of the Center, consisting of the Licensed Area (as defined below) and depicted on **Exhibit "A"** attached hereto, for the parking of vehicles of guests of the Holocaust Museum; and

C. Licensor is willing to grant Licensee a temporary license to use the Licensed Area for such purpose, subject to the terms and provisions of this Agreement and the Rules of Operation set forth in **Exhibit "B"** attached hereto.

NOW, THEREFORE, in consideration of the foregoing recitals and other good and valuable consideration, the receipt and adequacy of which is hereby acknowledged, Licensor and Licensee hereby agree as follows:

1. **Basic Terms.** The following terms shall have the following meanings throughout this Agreement:

A. **CENTER:**	The Grove
B. **LICENSOR:**	The Grove, LLC, a Delaware limited liability company registered to do business in California as GFM, LLC
Licensor's Notice Address:	101 The Grove Dr., Los Angeles, CA, 90036
Management Contact:	Richard Lynch
Phone Number:	(323) 900-8000
C. **LICENSEE:**	Holocaust Museum LA
Licensee's Notice Address:	100 The Grove Drive Los Angeles, CA 90036
Management Contact:	Beth Kean, CEO
Phone Number	(323) 651-3322/310-922-6108

DocuSign Envelope ID: 3D171C33-16A3-4D75-9129-9DAE9AEF4379

35. **California Certified Access Specialist Inspection**. Pursuant to California Civil Code §1938, Licensor hereby states that the Licensed Area has not undergone inspection by a Certified Access Specialist (CASp) (defined in California Civil Code §55.52(a)(3)). Pursuant to Section 1938 of the California Civil Code, Licensor hereby provides the following notification to Licensee: "A Certified Access Specialist (CASp) can inspect the subject premises and determine whether the subject premises comply with all of the applicable construction-related accessibility standards under state law. Although state law does not require a CASp inspection of the subject premises, the commercial property owner or lessor may not prohibit the lessee or tenant from obtaining a CASp inspection of the subject premises for the occupancy or potential occupancy of the lessee or tenant, if requested by the lessee or tenant. The parties shall mutually agree on the arrangements for the time and manner of the CASp inspection, the payment of the fee for the CASp inspection, and the cost of making any repairs necessary to correct violations of construction related accessibility standards within the premises." If Licensee requests to perform a CASp inspection of the Licensed Area, Licensee shall, at its cost, retain a CASp approved by Licensor (provided that Licensor may designate the CASp, at Licensor's option) to perform the inspection of the Licensed Area at a time agreed upon by the parties. Licensee shall provide Licensor with a copy of any report or certificate issued by the CASp (the "**CASp Report**"). Licensee agrees to keep the information in the CASp Report confidential except as necessary for the Licensee to complete any modifications. The foregoing notwithstanding, Licensor represents that as of the date hereof, it has not received written notice that the Licensed Area requires changes or modifications in accordance with the foregoing provisions and in the event that it does so require, Licensee shall have the right to terminate this License, without liability and with the return of any unused portion of the License Fee from Licensor.

[*The signatures are on the following page.*]

DocuSign Envelope ID: 3D171C33-16A3-4D75-9129-9DAE9AEF4379

IN WITNESS WHEREOF, the parties have executed this Agreement as of the day and year first written above.

LICENSOR:

The Grove, LLC, a Delaware limited liability company, registered to do business in California as GFM, LLC

By: Caruso Management Company, Ltd., a California limited partnership
Its: Managing Agent

DocuSigned by:
By: Richard Lynch
6B8B9BC07B1C4B8...
Name: Richard Lynch
Its: Property Manager

7/15/2021

LICENSEE:

Holocaust Museum LA

DocuSigned by:
By: Beth Kean
CEO 4C357EA71C040C...
Its:

7/15/2021

Beth Kean

DocuSign Envelope ID: 3D171C33-16A3-4D75-9129-9DAE9AEF4379

termination of this Agreement (whether pursuant to Licensor's election to terminate this Agreement or otherwise.

25. **Limitation of Liability.** In no event will Licensor, its shareholders, members, managers, limited partners, general partners, directors, officers, employees, agents, attorneys, successors or assigns of Licensor or any Affiliate of Licensor (the "**Licensor Parties**") be liable to Licensee for consequential, incidental, indirect, punitive or special damages, or loss of profits, business or goodwill, regardless of whether such liability is based on breach of contract, tort, strict liability, or otherwise, and even if advised of the likelihood of such damages. Anything in this Agreement and Paragraph 24 to the contrary notwithstanding, Licensee agrees that Licensor's maximum exposure and legal liability to Licensee hereunder for any breach by Licensor or any Licensor Parties of any covenant, representation, warranty or indemnification hereunder shall be limited to One Million Dollars ($1,000,000) in excess of the insurance coverage maintained by Licensor on the Center, and no other assets of Licensor or Licensor Parties shall be subject to levy, execution or other procedures for the satisfaction of Licensee's remedies.

Licensor acknowledges that Licensee is a non-profit entity. In no event will Licensee, its shareholders, members, managers, limited partners, guests, visitors, invitees, directors, officers, employees, agents, attorneys, successors or assigns of Licensee or any Affiliate of Licensee (the "**Licensee Parties**") be liable to Licensor for consequential, incidental, indirect, punitive or special damages, or loss of profits, business or goodwill, regardless of whether such liability is based on breach of contract, tort, strict liability, or otherwise, and even if advised of the likelihood of such damages. Anything in this Agreement and Paragraph 24 to the contrary notwithstanding, Licensor agrees that Licensee's maximum exposure and legal liability to Licensor hereunder for any breach by Licensee or any Licensee Parties of any covenant, representation, warranty or indemnification hereunder shall be limited to five hundred thousand dollars ($500,000), and no assets of Licensee or Licensee Parties shall be subject to levy, execution or other procedures for the satisfaction of Licensor's remedies.

26. **Nondiscrimination Covenant**. Licensee covenants by and for itself and its successors and assigns, and all persons claiming under or through Licensee and this Agreement is made and accepted upon and subject to the following conditions:

> "There shall be no discrimination against or segregation of any person or group of persons on account of race, color, creed, religion, sex, marital status, physical or mental disability or medical condition, handicap, ancestry or national origin in the leasing, subleasing, transferring, use, occupancy, tenure or enjoyment of the Licensed Area herein leased nor shall the Licensee or any person claiming under or through the Licensee, establish or permit any such practice or practices of discrimination or segregation with reference to the selection, location, number, use or occupancy of tenants, lessees, sublessees, subtenants or vendees in the Licensed Area herein leased."

27. **Rules and Regulations.** Licensee agrees to comply with (and cause its officers, employees, contractors, invitees and all others doing business with Licensee, to comply with) all rules and regulations of general applicability regarding the Center as may be established by Licensor at any time and from time to time during the Term, including without limitation rules

n Envelope ID: 3D171C33-16A3-4D75-9129-9DAE9AEF4379

Exhibit "A"

SITE PLAN – 7th Level

DocuSign Envelope ID: 3D171C33-16A3-4D75-9129-9DAE9AEF4379

and regulations pertaining to signs. See **Exhibit "B"** attached for detailed operations rules. Notwithstanding anything to the contrary in this Agreement, in the event of a conflict between the terms of this Agreement and any rules, the terms of this Agreement shall govern.

28. **Notice.** Notices and demands required or permitted to be given hereunder shall be in writing given by personal delivery or be sent by certified mail, return receipt requested, addressed if to Licensor, at the address listed in Paragraph 1C above, or such other address as Licensor may designate by notice to Licensee from time to time, and, if to Licensee, at 100 The Grove Drive, Los Angeles, CA 90036, Attn: Beth Kean, or such other address as Licensee may designate by notice to Licensor from time to time. Notices and demands shall be deemed to have been given when mailed or, if made by personal delivery, then upon such delivery.

29. **Force Majeure/Cancellation.** If either party is prevented from fulfilling its obligations hereunder due to an act of God, extreme weather conditions, state of war, acts of terrorism, strikes, boycotts or other labor troubles, government control, government or public service shutdown, pandemic, epidemic and coronavirus/COVID-19 and any other public health emergencies in any form and prevention and control measures with respect to these public health emergencies, or any other reason beyond the control of the parties, then such party shall not be deemed to have breached this Agreement, provided the party claiming force majeure promptly notifies the other party of the force majeure, the anticipated duration of the force majeure, and the steps being taken to remedy the failure. If any force majeure event results in a partial or full closure of the Licensed Area or the Center or the inability to open the Licensed Area or Center by the Commencement Date, Licensee shall be entitled to reschedule the Event at a mutually agreeable time either at the Licensed Premises or at a reasonably equivalent alternative space, within the following twelve (12) months.

30. **Compliance with Laws**. Licensee agrees that the Permitted Use shall be conducted in compliance with all laws, ordinances, orders, rules, regulations and requirements of all Federal, State and Municipal governments and appropriate departments, boards and officers thereof, and of the insurance organization having jurisdiction thereof. Licensor agrees that it operates the Licensed Area in compliance with all laws, ordinances, orders, rules, regulations and requirements of all Federal, State and Municipal governments and appropriate departments, boards and officers thereof, and of the insurance organization having jurisdiction thereof.

31. **Choice of Law; Severability; Time of the Essence**. This Agreement is entered into and shall be construed in accordance with and governed by the laws of the State of California. Any and all disputes related to or arising out of this Agreement shall be venued in and adjudicated by the California Courts located in Los Angeles. If any provision of the Agreement or application thereof shall be deemed to be invalid, the remainder of the Agreement shall not be affected thereby, and if possible, a valid and enforceable clause carrying out the same purpose shall be inserted in its place. Each provision of the Agreement shall be valid and enforceable to the fullest extent permitted by law. The Agreement can only be modified by a writing executed by Licensor and Licensee. Time is of the essence with respect to each Term of the Agreement.

32. **Confidentiality**. Licensor and Licensee agree that the terms of this Agreement are confidential and constitute proprietary information of the parties hereto. Disclosure of the

Exhibit "B"

RULES AND REGULATIONS

1. [omitted];

2. [omitted];

3. [omitted];

4. [omitted];

5. [omitted];

6. [omitted];

7. Refrain from burning any papers or refuse of any kind at the Center;

8. [omitted];

9. Not use the Licensed Area or any part thereof in any manner that will constitute a nuisance or unreasonable annoyance to the public, to other occupants of the Center or to Licensor, or for any hazardous purpose or in any manner that will impair the structural strength of the building.

10. [omitted].

11. Licensee shall not mark, drive nails, screw or drill into, paint or in any way deface the exterior surface of exterior walls, roof, foundations, bearing walls or pillars without the prior written consent of Licensor. The actual, reasonable and documented out-of-pocket expense of repairing any breakage, stoppage or damage resulting from a violation of this rule shall be borne by Licensee. No boring or cutting for wires shall be allowed, except with the consent of Licensor.

12. No awning or shade shall be affixed or installed over or in the show windows or the exterior of the Licensed Area, except with the prior written consent of Licensor, and unless it be of such color, size and style and in such place upon the Licensed Area as may be designated by Licensor. If Licensee desires window drop curtains in the show windows of the Licensed Area, the same must be of such uniform shape, color, material and make as may be prescribed by Licensor and must be put up as directed by Licensor, and paid for by Licensee.

13. Licensee shall not use any machinery (other than parking vehicles) within the Licensed Area, even though its installation may have been permitted, which may cause any unreasonable noise or jar, or tremor to the floors or walls, or which by its weight might injure the floors of the Licensed Area.

14. Except for vehicles, no machinery of any kind will be allowed in the Licensed Area without the written consent of Licensor.

DocuSign Envelope ID: 3D171C33-16A3-4D75-9129-9DAE9AEF4379

terms hereof could adversely affect the ability of Licensor to negotiate with other licensees of the Center. Each of the parties hereto agrees that such party, and its respective partners, officers, directors, employees, agents and attorneys, shall not disclose the terms and conditions of this Agreement to any other person without the prior written consent of the other party hereto except pursuant to an order of a court of competent jurisdiction. Notwithstanding the foregoing, (i) Licensor may disclose the terms hereof to its insurance broker for purposes of insuring the Licensed Area, any lender (prospective or existing now or hereafter having a lien on Licensor's interest in the Center), or any potential purchaser of Licensor's interest in the Center, and (ii) Licensee may disclose the terms hereof to its insurance broker for purposes of insuring the Licensed Area, and to its consultants, attorneys and applicable representatives of the City of Los Angeles involved in Licensee's remodeling project and as otherwise necessary in connection with its remodeling project; furthermore, the terms hereof will be disclosed to Licensee's guests, visitors and invitees who will be receiving the stickers for the day parking rate. Either party may disclose the terms hereof to its respective independent accountants who review its respective financial statements or prepare its respective tax returns, to any prospective transferee of all or any portion of their respective interests hereunder (including a prospective sublessee or assignee of Licensee), to any governmental entity, agency or person to whom disclosure is required by applicable law, regulation or duty of diligent inquiry and in connection with any action brought to enforce the terms of this Agreement, on account of the breach or alleged breach hereof or to seek a judicial determination of the rights or obligations of the parties hereunder and to risk management consultants.

33. **Time of the Essence; Nonwaiver**. Time is of the essence of each and every provision of this Agreement. The waiver by Licensor in any instance of any term, covenant or condition herein contained shall not be deemed to be a waiver of such term, covenant or condition in any other instance and shall not be deemed a waiver of Licensor's rights and remedies with respect to any subsequent breach of the same or any other term, covenant or condition herein contained. The subsequent acceptance of Base License Fee, Percentage License Fee or other fees or any other sum hereunder by Licensor shall not be deemed to be a waiver of any preceding default by Licensee of any term, covenant or condition of this Agreement regardless of Licensor's knowledge of such preceding default at the time of the acceptance of such sum. In the event of litigation or other legal proceedings between Licensor and License, the non-prevailing party shall reimburse the prevailing party for the prevailing party's reasonable attorneys' fees.

34. **Miscellaneous**. This Agreement constitutes the entire agreement of the parties and shall not be modified except in a writing signed by the parties hereto. The headings in this Agreement are inserted for convenience only and in no way are intended to describe, interpret, define or limit the scope, extent or intent of this Agreement or any provision hereof. This Agreement may be executed in counterparts, each of which shall be deemed an original but all of which shall constitute one and the same instrument. A faxed or electronic copy with faxed or electronic signatures of this Agreement shall be deemed to be an original and binding on the parties hereto. The parties signing and delivering this Agreement in the manner described in the previous sentence shall endeavor to forward signed originals by hand, mail or overnight commercial delivery service to the other, but failure to do so shall not affect the validity hereof.

15. Licensee's agents and employees while working at the Licensed Area shall not interfere in any way with other Licensees or patrons of the Center, nor bring into nor keep within the boundaries of the Center any animal or bird, or any bicycle or other vehicle, except such vehicles as are permitted to park in the parking area, and shall park in the areas designated from time to time for employee parking generally. Notwithstanding the foregoing to the contrary, Licensee's agents and employees may bring into and keep within the boundaries of the Center any bicycle provided that it is kept at a bicycle rail or within the non-sales area of the Licensed Area. Licensee's agents and employees while working at the Licensed Area shall not throw cigar or cigarette butts or other substances or litter of any kind in or about the Center, except in receptacles placed therein for such purposes by Licensor or governmental authorities.

16. All freight must be moved into, within and out of the Licensed Area only during such hours as may be prescribed by applicable governmental rules, regulations and ordinances, and according to such rules as may be promulgated from time to time by Licensor, which rules shall be subject to the reasonable approval of Licensee. Notwithstanding anything in this Agreement to the contrary, Fed Ex, UPS and similar type deliveries may be made to the rear door of the Licensed Area during regular business hours of the Center and may be made to the front door of the Licensed Area during non business hours of the Center.

17. No waiver of any rule or regulation by Licensor shall be effective unless expressed in writing and signed by Licensor.

18. Licensor reserves the right to exclude or expel from the Center any person who, in the reasonable judgment of Licensor, is intoxicated or under the influence of liquor or drugs.

19. During emergency conditions, and after normal business hours, Licensor reserves the right to close and keep locked any and all entrances and exit doors of the Center and gates or doors closing the parking areas.

20. Licensor reserves the right at any time to change or rescind any one or more of these rules or regulations or to make such other and further reasonable rules and regulations as in Licensor's judgment may from time to time be necessary for the management, safety, care and cleanliness of the Licensed Area and Center, and for the preservation of good order therein, as well as for the convenience of occupants, Licensees and patrons of the Center. Licensor shall use reasonable efforts to enforce these rules and regulations against all Licensees, provided, however, Licensor shall not be responsible to Licensee or to any other person for the non-observance or violation of the rules and regulations by any other Licensee or other person. Licensee shall be deemed to have read these rules and to have agreed to abide by them as a condition to its occupancy of the Licensed Area.

21. Licensee shall abide by any additional rules or regulations which are ordered or requested by any governmental or military authority.

NOT FOR CONSTRUCTION

10.DEC.2021
100% DESIGN SUBMITTAL

ba
belzberg architects
2740 MAIN STREET
SANTA MONICA, CA 90405
310.453.9611
www.belzbergarchitects.com

#	DESCRIPTION	DATE
1	P.C. VERIF 1	12/10/2021

HOLOCAUST MUSEUM LA EXPANSION

100 THE GROVE DRIVE
LOS ANGELES, CA 90036

PARKING AGREEMENT

PROJECT NUMBER: 17009

1

G046

12/10/2021 10:21:22 AM

DocuSign Envelope ID: 3D171C33-16A3-4D75-9129-9DAE9AEF4379

D. **LICENSEE'S TRADE NAME:** Holocaust Museum LA

E. **LICENSED AREA:** Space "R7" at The Grove, which consists of seventy five (75) parking spaces within the Center's parking structure ("The Grove Parking Structure"), and is approximately 13,500 square feet and is in the approximate location designated on **Exhibit "A"** attached hereto.

F. **TERM:** The term of this Agreement (the "Term") shall commence on June 1, 2021, (the "**Commencement Date**"), and shall expire when Licensee's remodeling project is substantially complete, unless sooner terminated pursuant to the terms of this Agreement (the "**Termination Date**").

G. **PERMITTED USE:** For the use of 75 parking spaces for guests of the Holocaust Museum and for no other use or purpose. While guests have access to 75 parking spaces, Licensor is not responsible for ensuring the 75 highlighted spaces in Exhibit "A" are available at all times. Availability is subject to Licensor's reasonable discretion and may not be permitted during the holiday season or on major events, such as Tree Lighting.

H. **PREFERRED DAY RATE:** Guests of the Holocaust Museum will be charged the preferred day rate of Ten and 00/100 Dollars ($10.00) per ticket when parking in The Grove Parking Structure. The preferred day rate will be available to guests upon display of their Museum sticker at the Concierge desk or the parking office, as determined by Licensor.

I. **PERCENTAGE FEE:** N/A.

J. **UTILITY CHARGE:** N/A

K. **SECURITY DEPOSIT:** N/A

L. **ADDITIONAL INSUREDS:** Licensor, A.F. Gilmore Company, Caruso Management Company, Ltd., their respective affiliated entities, and each of their respective officers, directors, members, managers, shareholders, partners, agents and employees, and all parties that have interests in encumbrances upon the Center (collectively, the "**Licensor Parties**") and such other persons or entities as Licensor may designate to be named as Additional Insureds.

2. **Grant of License; Licensed Area.** Licensor hereby grants to Licensee and Licensee hereby accepts from Licensor a license to use the Licensed Area for the Permitted Use during the Term upon the terms and subject to the conditions set forth in this Agreement (the "**License**"). Licensee acknowledges that the License is expressly subject to the terms and condition of (a) that certain Lease dated as of August, 2000, by and between A.F. Gilmore Company, California corporation (as Landlord) ("**Ground Lessor**") and Licensor (as Tenant and successor-in-interest to The Grove at Farmer's Market, LLC) (as subsequently amended, modified and supplemented, the "**Ground Lease**"); and (b) all other matters of record encumbering or otherwise affecting the Center. All references to the Center herein shall be deemed to include, without limitation, any and all common areas and facilities designated by Licensor from time to time for the nonexclusive use of Licensee in common with other authorized users (collectively, "**Common Area**"). Notwithstanding the foregoing or any other provision of this Agreement to the contrary, it is understood and agreed that the Common Area shall not in any event be deemed to be a portion of or included with the Licensed Area licensed to Licensee hereunder. Such Common Area shall be subject to the exclusive management and control of Licensor. Licensor shall have the right from time to time to designate, relocate and limit the use of particular areas or portions of the Common Area and to establish, propagate and enforce the rules and regulations concerning the Common Area. **DESIGN APPROVAL: All images and signage shall be approved by Licensor, in Licensor's sole and absolute discretion prior to any installation by Licensee.**

3. **Use**. Licensee shall use the Licensed Area only for the Permitted Use and for no other uses whatsoever.

4. **Preferred Day Rate.** Guests of Licensee will pull into The Grove Parking Structure at any time of day, pull a ticket, go to the museum and receive a sticker for visiting. Upon their return to The Grove, the guest will visit the parking office or the Concierge desk, as determined by Licensor, and provide their sticker as proof of attendance at the Holocaust Museum. The guest shall thereafter, regardless of length of visit, be charged the preferred day rate of Ten Dollars and 00/100 ($10.00) for parking in The Grove Parking Structure.

5. Intentionally Deleted.

6. **Interest and Late Charge.** Licensee acknowledges that late payment by Licensee to Licensor of License Fees during the Term will cause Licensor to incur costs not contemplated by this Agreement, the exact amount of such costs being extremely difficult and impracticable to fix. Such costs include, without limitation, processing and accounting charges. Therefore, if Licensee shall fail to make any payment of License Fees to Licensor when due during the Term, interest on said late payment shall accrue at the rate of one and one-half percent (1½ %) per month, or the highest rate permitted by applicable law, whichever is less, from the date said payment was due, and said interest shall become due and payable on the first day of the month following the month in which said payment was due.

7. **Security Deposit.** Licensee shall deposit with Licensor a Security Deposit, if any in the amount set forth in Paragraph 1.K above to secure Licensee's performance of each and every covenant and agreement to be performed by Licensee hereunder. Licensor shall have the right, at its option, to apply all or part of the Security Deposit toward the payment of the amounts required to remedy any default of Licensee in the payment of License Fees and/or in the performance of any other covenant or agreement contained herein, provided however, the existence of the Security Deposit shall not affect the rights of the Licensor in the event of any such nonpayment or failure to perform, nor shall the same in any way limit Licensee's responsibility therefore, and shall not preclude or extinguish any other right or remedy to which Licensor may be entitled. If Licensor applies all or part of the Security Deposit, Licensee shall, upon notice from Licensor, pay to Licensor an amount sufficient to restore the Security Deposit to the original full amount. Upon termination of this Agreement, Licensor shall promptly reimburse Licensee for the amount of any unused portion of the Security Deposit and in no event shall any interest be due and owing thereon.

8. **Work at Licensed Area.** Licensee accepts the Licensed Area in an "as-is, where-is, with all faults" condition. Licensee shall not be obligated to improve, alter or modify the Licensed Area. Licensee shall not conduct any construction activity at the Licensed Area. Licensee shall pay all taxes (if any) based on any property of Licensee, real or personal, which shall at any time be in the Licensed Area or any other part of the Center.

9. **Utilities**. Nothing contained in this Agreement shall limit Licensor in any way from granting or using easements on, across, over and under the Center for the purpose of providing utility services.

10. **Maintenance of the Licensed Area.** Licensor and Licensee acknowledge that the Licensed Area consists of parking spaces in The Grove Parking Structure. Licensor, and not Licensee, shall be responsible for the repair and maintenance of The Grove Parking Structure, which includes the Licensed Area. Accordingly, Licensee shall not be obligated to maintain or make any repairs to the Licensed Area.

11. **Intentionally Omitted.**

12. **Parking.** Subject to the taking of vehicle parking spaces by condemnation or other similar governmental events beyond the reasonable control of Licensor, Licensor shall maintain not less than that number of vehicle parking spaces which are prescribed by applicable law ("**Code Requirements**"). Licensee has personally inspected the Center, or plans therefor, and has satisfied itself that parking is adequate for Licensee's purposes. Licensor shall have the right, but not the obligation, to: (i) reasonably designate from time to time which part(s) of the Center shall be used for vehicle parking by Licensee and Licensee's customers, sublessees, concessionaires, and invitees, provided that Licensee shall remain entitled to the use of seventy five (75) parking spaces upon the terms and conditions of this Agreement; (ii) require that Licensee and Licensee's employees park their vehicles in designated parking areas, including Easement Areas; (iii) establish restricted and exclusive parking zones; and (iv) institute fee and/or validated parking controls with variable fees, provided that the terms of Section 4 above shall apply with respect to Licensee and the museum guests**. Licensee shall receive four (4) complimentary parking passes for the term.**

13. **Use of Licensed Area.** Licensee shall not, without Licensor's prior written consent, given in Licensor's sole discretion, use any portion of the Licensed Area or Center: (i) to conduct or advertise any auction, bankruptcy, fire, distress, liquidation, relocation, close-out, going out of business, sheriff's or receiver's sale on or from the Licensed Area, or any other sale that, in Licensor's reasonable opinion, adversely affects the reputation of the Center; (ii) to sell any so-called "Army and Navy" surplus, or previously worn or "used" goods, as those terms are generally used at this time and from time to time hereafter (except for fine antique furniture and antique jewelry or fine used clothes) or other store selling merchandise which is primarily "seconds", "odd-lots", damaged or discontinued including swap shops and "outlet stores"; (iii) to store, sell or display any merchandise or other objects outside the exterior walls, permanent doorways or roof of the Licensed Area; (iv) to use, generate, manufacture, store or handle, or cause or permit to be brought upon, stored, manufactured, blended, handled, discharged or used on or about the Licensed Area or the Common Area, any hazardous material except for materials normally and legally used for office, retail, and janitorial cleaning and food and beverage preparation, provided that Licensee stores such products on the Licensed Area in limited quantities and in prescribed receptacles to insure against hazardous spillage and Licensee uses such materials only for their intended purposes and in the manner prescribed by the manufacturers and applicable law; (v) any self-storage facilities; (vi) any medical or health-oriented facilities or offices, including hospitals, medical or dental laboratories; (vii) any industrial type use (e.g., manufacturing, warehousing, processing, assembly, plating); (viii) to damage, deface or overload the plumbing, electrical, HVAC or structural systems of the Licensed Area; (ix) to conduct any activity which may make void or voidable or increase the premium on any insurance coverage on the Center or parts thereof; (x) for ambulance services; (xi) for any governmental use or office, except as expressly permitted herein or any social service functions or facilities; (xii) for the operation of "adult" or "adult business" uses and sexually oriented businesses, including a massage parlor or bath house, adult book or adult video store, or for the sale, rental or exhibition of pornographic material and/or display in storefront windows or in areas within the Licensed Area which are visible from outside of the Licensed Area, any sign, product or advertising material which is or is for pornographic or "adult" material; (xiii) in a manner which is a public or private nuisance including any which creates undue noise, sound, vibration, litter or odor; (xiv) for a night club or discotheque, tavern, pub, bar, cocktail lounge or similar establishment whether or not featuring any form of "adult entertainment" (except for a sit-down full table service restaurant featuring non-adult regularly scheduled live entertainment) or the sale of alcoholic beverages, other than for off-site consumption, sales by a grocery market, drug store or fine wine and spirits store, or in conjunction with a sit-down restaurant; (xv) for a roller or skating rink, skateboard or other rink or area, game room, card room, billiard room or parlor, amusement center, arcade, including use of any video or mechanical game machines, bowling alley, health spa, health club, exercise club, gymnasium or other similar operations; (xvi) for lodging, including a hotel, motor inn, apartments or condominiums; (xvii) for vehicle, including new or used automobile, truck, trailer, R.V. or boat dealer (or other similar enterprise), sales, leasing, display or repair (other than for office functions relating to such operations); (xviii) for a funeral parlor or mortuary; (xix) for a mobile home or trailer court; (xx) for any dumping, disposing, recycling, incineration or reduction on a large-scale commercial basis of refuse and recyclables (exclusive of collection in appropriately screened areas of refuse and recyclables resulting from normal day to day operations in the locations designated by Licensor from time to time); (xxi) for any commercial laundry or dry cleaning plant or coin operated laundromat; (xxii) senior or child day care center or school (other than in conjunction with a retail or, in the case of day care, office operation but in no event to exceed 10,000 square feet); (xxiii) for any veterinary hospital, animal boarding, training or raising facilities or pet shop; (xxiv) for any separately demised newsstand; (xxv) for an off-track betting business, bingo, lottery or similar "games of chance" sales or facility; (xxvi) for the sale of food, beverage or merchandise from vending machines or for the operation of any coin or token operated vending machines or exterior telephones on the Licensed Area, except for employees of Licensee; (xxvii) for the placement of any aerial or antenna on the roof or exterior walls of the Licensed Area; (xxviii) for the display of billboards or large advertisements whether free-standing, painted upon or affixed to the exterior of any structure; (xxix) for any astrology, palm reading, tarot card or other like service or facility; (xxx) for answering services; (xxxi) for a barber college; (xxxii) for a carnival, amusement park or circus; (xxxiii) for churches, synagogues, temples and houses of worship; (xxxiv) for contractors' offices (other than during construction of the Center or portions thereof); (xxxv) for data processing businesses; (xxxvi) for detective or investigatory services; (xxxvii) for employment agencies; (xxxviii) for professional offices including escrow services and real estate offices (except for on-site project sales, leasing or management offices); (xxxix) for "head shops" or other sale of paraphernalia for use with illicit drugs; (xl) for a fast food drive through restaurant; (xli) for financial offices, including banks, other than retail financial service operations no larger than 3,000 square feet; (xlii) for a flea market (whether indoors or outdoors); (xliii) for a gas or fuel station; (xliv) for gun shops; (xlv) for labor union offices; (xlvi) for mail order houses; (xlvii) for pawnshops; (xlviii) for places of instruction, reading room or any operation catering primarily to students or trainees rather than to customers; (il) for political offices; (l) for private educational institutions; (li) for telephone and communications services; or (lii) auto parts or accessories retailer (as a primary use). All of the foregoing uses are sometimes collectively referred to herein as the "**Prohibited Uses**". Licensee shall at all times, at Licensee's sole cost and expense, observe the following rules and regulations; (a) omitted, (b) Licensee shall not perform any act or carry on any practice which constitutes a nuisance to persons at the Licensed Area or the Center or which Licensor shall otherwise reasonably determine to be offensive or dangerous; (c) Licensee shall not burn any trash or garbage in or about the Licensed Area or anywhere else in the Center; (d) Licensee shall at all times comply with all laws, rules and regulations pertaining to the Licensed Area and/or the Center and/or the conduct of Licensee's business thereat promulgated by any governmental agency having jurisdiction with respect thereto (including, without limitation, the Americans with Disabilities Act), provided that the foregoing shall not obligate Licensee to improve or modify the Licensed Area; (e) omitted; (f) omitted; (g) Licensee shall not distribute any handbills or other advertising material in the Center; (h) Licensee and its guests shall park their cars only in the Licensed Area; (i) omitted; (j) Licensee shall not use, bring upon, or generate at the Licensed Area any substance which is now or hereafter deemed hazardous or toxic by any governing or regulatory body having jurisdiction; (k) Licensee shall not do, bring, or keep anything in or about the Licensed Area or the Center that will cause a cancellation of any insurance covering the Licensed Area or the Center, or any portion thereof; (l) Licensee shall not use the Licensed Area or the Center in any manner that will constitute waste, nuisance, or unreasonable annoyance to owners or occupants of adjacent properties, or to the other licensee's, tenants or occupants in the Center; (m) Licensee shall not use the Licensed Area or the Center for sleeping, washing clothes, cooking or the preparation, manufacture, or mixing of anything that might emit any odor or objectionable noises or lights into the Licensed Area or Center; (n) Licensee shall not sell or display merchandise outside the confines of the Licensed Area or in the mall or the Common Areas; (o) Licensee shall not do anything on the Licensed Area or in the Center that will cause damage to the Licensed Area or the Center; and (p) the Licensed Area shall not be overloaded and no machinery apparatus or other appliance shall be used or operated in or on the Licensed Area or in the Center that will in any manner injure, vibrate, or shake the Licensed Area or the Center. Licensee shall comply with such other reasonable rules and regulations as Licensor may from time to time adopt with respect to the Center.

14. **Termination**. Licensor shall have the right to terminate this License Agreement for any reason upon sixty (60) days prior written notice to Licensee.

15. **Signs and Advertising.** Licensee shall not be obligated to install, or pay for the installation of, any signage. Licensee shall not erect, place, paint, or maintain in or on the Licensed Area, including on any plate glass windows or doors, any sign or any object of any kind whatsoever, visible from outside the Licensed Area without the prior written consent of Licensor, which consent may be given at Licensor's sole and absolute discretion. Neither Licensee nor its agents, employees or representatives shall solicit or distribute any materials in the Common area unless such activity is performed in accordance with Licensor's procedures for the same and has been approved in advance by Licensor. Licensee shall not use the name of the Center on any merchandise without first procuring the specific written approval of same from Licensor, which Licensor may withhold in its sole discretion. Balloons and other outdoor displays will not be permitted.

16. **Hours of Operation.** Intentionally Deleted.

17. **Delayed Opening License Fee.** Intentionally Deleted

18. **Access to Licensed Area.** Licensor reserves the right to enter upon the Licensed Area at all reasonable hours for the purpose of inspecting the same, or the use thereof by Licensee, or for making emergency repairs. The exercise by Licensor of any of its rights herein shall not be deemed an eviction or disturbance of Licensee's use and possession of Licensed Area.

19. **Security.** Licensor may, but shall have no obligation, from time to time, cause on (1) or more persons or entities to patrol or provide security for the Premises. Under no circumstances shall Licensor be liable to Licensee or to any other person by reason of any theft, burglary, robbery, assault, trespass, unauthorized entry, vandalism, or any other act of any third person occurring in or about the Premises unless caused by Licensor's criminal or gross negligence. Nothing contained herein shall be deemed to create any liability upon Licensor for any damage to motor vehicles of Licensee or its customers or employees or for loss of property from within such motor vehicles. At all times and in all respects, Licensee shall comply with all federal, state and local laws, ordinances and regulations including, but not limited to, all applicable environmental laws, ordinances and regulations.

20. **Insurance.** Licensee shall maintain in full force and effect during the Term a commercially reasonable policy of commercial general liability insurance, with limits of no less than $2 million per occurrence, $5 million annual aggregate (which Licensee may fulfill with umbrella policies), issued by an insurer or insurers licensed in the State of California, which will name The Grove as an additional insured and which will protect Licensee and its affiliates and additional insureds from claims set forth below which may result out of Licensee's actions or inactions.

21. **Waiver of Claims and Indemnity.**

(a) Licensee shall indemnify, defend, and hold harmless Licensor, Licensor's Affiliates, and all shareholders, members, managers, limited partners, general partners, directors, officers, employees, agents, attorneys, successors or assigns of Licensor or any Affiliate of Licensor (collectively, the "**Indemnified Parties**") from and against, and reimburse them for, all claims, demands, liabilities, losses, damages, causes of action, judgments, penalties, costs and expenses (including reasonable attorneys' fees) which may be imposed upon, asserted against or incurred or paid by them by reason of, on account of or in connection with any bodily injury or death or property damage caused by the ~~gross~~ negligence or willful misconduct of Licensee or its guests who are utilizing the Licensed Area for parking; provided, however, that Licensee shall not be obligated to indemnify Licensor or any of the Indemnified Parties for their own negligence. The foregoing indemnities shall survive termination of this Agreement.

(b) In the event any claim for which Licensee is obligated to indemnify the Indemnified Parties pursuant to Section 21(a) above is asserted or action instituted against one or more of the Indemnified Parties by a third party (a "Third Party Claim"), Licensee shall promptly upon receipt of notice of such Third Party Claim assume and pay for the defense of such Indemnified Party, and shall satisfy any judgment against such Indemnified Party that may be rendered due to such Third Party Claim. Licensee shall be entitled to assume and control the defense of any Third Party Claim through counsel reasonably approved by the Indemnified Party if it gives notice of its intention to do so to the Indemnified Party; provided, however, that Licensee shall not have the right to assume such defense, and shall pay the actual, reasonable fees and expenses of outside counsel retained by the Indemnified Party, if the Third Party Claim over which the Indemnified Party seeks to assume control (i) seeks non-monetary relief, (ii) involves criminal allegations, (iii) involves a claim which the Indemnified Party reasonably determines that Licensee failed or is failing to defend (except that, unless the Indemnified Party is actually prejudiced by delay, Licensee shall be afforded 30 days following receipt of written notice of such failure by the Indemnified Party in which to cure such failure to the Indemnified Party's reasonable satisfaction), or (iv) involves a claim the amount in controversy of which exceeds $1,000,000. The Indemnified Party shall cooperate with Licensee in such defense and make available to Licensee, at Licensee's expense, all witnesses, pertinent records, materials and information in the Indemnified Party's possession or reasonable control relating thereto as is reasonably requested by Licensee. If Licensee does not assume control of such defense, the Indemnified Party shall control such defense and Licensee shall pay the actual, reasonable fees and expenses of outside counsel retained by the Indemnified Party. The party not controlling such defense may participate therein at its own expense; provided that if Licensee assumes control of such defense and the Indemnified Party reasonably concludes that Licensee and the Indemnified Party have actual or potential conflicts of interests with respect to such action, suit, proceeding or claim, the reasonable fees and expenses of counsel to the Indemnified Party solely in connection therewith shall be paid by Licensee on a current basis. The party controlling such defense shall keep the other party advised of the status of such action, suit, proceeding or claim and the defense thereof and shall consider recommendations made by the other party with respect thereto. Except with the written consent of the Indemnified Party, which shall not be unreasonably withheld, conditioned or delayed, Licensee will not, in the defense of a Third Party Claim, consent to the entry of any judgment or enter into any settlement which does not include as an unconditional term thereof the giving to the Indemnified Party by the third party of a full release from all liability with respect to such suit, claim, action, or proceeding.

22. **Damage.** If the Licensed Area is damaged by fire, explosion, or other casualty or occurrence or are taken by condemnation, then this Agreement shall automatically terminate as of the date of such occurrence.

23. **Default.** If (i) Licensee shall fail to pay when due any License Fees, or (ii) if Licensee shall fail to perform or comply with any other term, condition or covenant on the part of Licensee to be observed herein, then, in any such event, Licensor shall give Licensee written notice thereof, and if Licensee does not cure such failure within ten (10) days, then Licensee shall be in breach hereunder and Licensor, at its option, any time thereafter, may terminate the License and this Agreement by notice to Licensee and, upon service of said notice, the License and this Agreement shall be terminated, Licensee's right to use the Licensed Area shall immediately cease, and Licensee shall immediately remove all of its personal property from the Licensed Area. If Licensee shall fail to remove its personal property from the Licensed Area at the expiration of the Term, whether after Licensee's breach or otherwise, Licensor may re-enter the Licensed Area and remove property of Licensee's found within the Licensed Area and Licensor shall not be liable from any damages resulting therefrom. Upon a breach by Licensee hereunder beyond applicable notice and cure periods, Licensor shall also have all other rights available to it at law or equity. No act by Licensor other than giving written notice to Licensee in accordance with the express provisions of this Agreement shall terminate this Agreement. Acts of maintenance, efforts to re-license or to lease the Licensed Area, or the appointment of a receiver on Licensor's initiative to protect Licensor's interest under this Agreement shall not constitute a termination of this Agreement. On termination of this Agreement following Licensee's breach hereof beyond applicable notice and cure periods, Licensor shall have the right to recover from Licensee all of Licensor's damages resulting from or arising out of Licensee's breach.

24. **Return of Licensed Area.** Upon the expiration of the Term, or upon the earlier termination of the Agreement (whether pursuant to Licensor's election to terminate this Agreement or otherwise) Licensee return the Licensed Area to Licensor in substantially the same condition as the Licensed Area was in on the Commencement Date, reasonable wear and tear excepted. Any such damage will be deducted from the Security Deposit. Licensee shall remove any and all merchandise and other personal property of Licensee from the Licensed Area at the expiration of the Term. If Licensee does not remove its property as herein provided such property shall be deemed abandoned by Licensee and Licensor may dispose of same as it sees fit. Notwithstanding the foregoing, Licensee acknowledges and agrees that Licensee's failure to fully timely comply with the provisions of this Paragraph 23 shall cause Licensor significant damages and losses which might otherwise be foreseeable by Licensee and Licensor shall retain all of its rights and remedies to recover such damages and losses from Licensee notwithstanding the

NOT FOR CONSTRUCTION

17.NOV.2021
100% DESIGN SUBMITTAL

ba
belzberg architects
2740 MAIN STREET
SANTA MONICA, CA 90405
310.453.9611
www.belzbergarchitects.com

#	DESCRIPTION	DATE
1	P.C. VERIF 1	12/10/2021

HOLOCAUST MUSEUM LA EXPANSION

100 THE GROVE DRIVE
LOS ANGELES, CA 90036

PARKING AGREEMENT

PROJECT NUMBER: 17009

1

G047

11/18/2021 3:10:28 PM

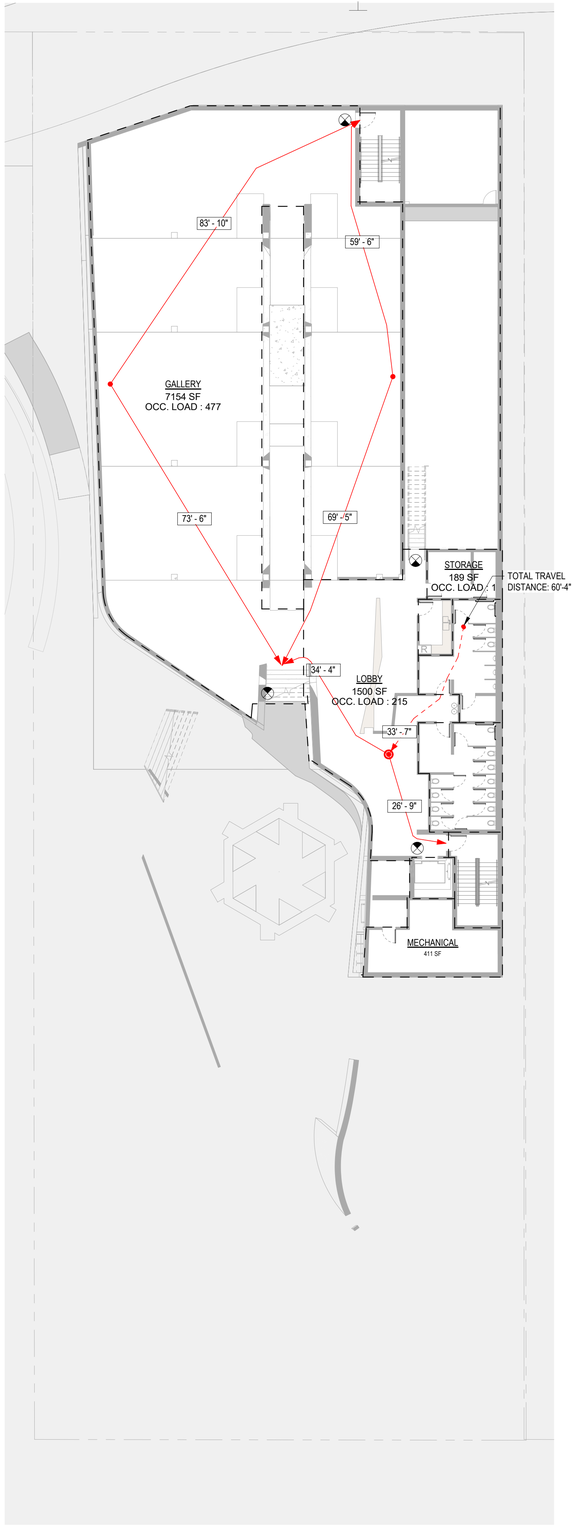

EX01
SCALE: 1/16" = 1'-0" 2

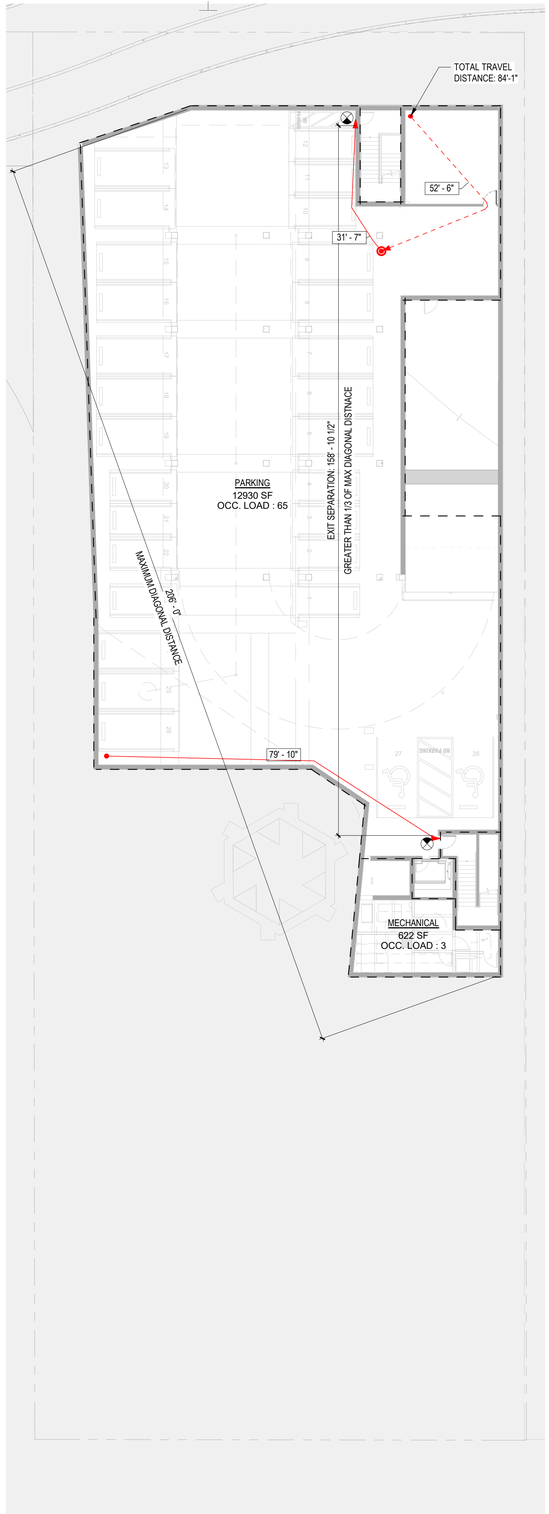

EX00
SCALE: 1/16" = 1'-0" 1

NORTH

OCCUPANCY CALCULATION - EX01

NAME	AREA	LEVEL	OCC. GROUP	LOAD FACTOR	OCC. LOAD
EX01					
GALLERY	7154 SF	EX01	A-3	15 SF	477
LOBBY	1500 SF	EX01	A-3	7 SF	215
STORAGE	189 SF	EX01	A-3	300 SF	1
MECHANICAL	411 SF	EX01	A-3	300 SF	2
EX01: 4					695
OCCUPANT LOAD TOTAL					695

OCCUPANCY CALCULATION - EX00

NAME	AREA	LEVEL	OCC. GROUP	LOAD FACTOR	OCC. LOAD
EX00					
PARKING	12930 SF	EX00	A-3	200 SF	65
MECHANICAL	622 SF	EX00	A-3	300 SF	3
STAIRS	241 SF	EX00	A-3	0 SF	
EX00: 3	13793 SF				68
OCCUPANT LOAD TOTAL	13793 SF				68

LEGEND & NOTES

- COMMON PATH OF TRAVEL
- EXIT ACCESS
- PATH TO PUBLIC WAY
- TWO-WAY POINT
- EXIT SIGN, DIRECTIONAL ARROW WHERE OCCURS

DOOR
- OCCUPANT LOAD
- WIDTH FACTOR
- REQUIRED WIDTH (IN))
- ACTUAL WIDTH (IN)

STAIR
- OCCUPANT LOAD
- WIDTH FACTOR
- REQUIRED WIDTH (IN))
- ACTUAL WIDTH (IN)

- BUILDING WILL BE FULLY SPRINKLERED

- PER CBC 2019 TABLE 1006.2.1
MAX. COMMON PATH OF EGRESS TRAVEL DISTANCE W/SPRINKLER SYSTEM FOR OCCUPANCY A : 75'

- PER CBC 2019 TABLE 1017.2
MAX. EXIT ACCESS TRAVEL DISTANCE W/SPRINKLER FOR OCCUPANCY A: 250'

- PER EXCEPTION CBC 2019 SECTION 1005.3.1
REQUIRED EGRESS CAPACITY FACTOR FOR STAIRWAYS W/SPRINKLER: 0.2

- PER EXCEPTION CBC 2019 SECTION 1005.3.2
REQUIRED EGRESS CAPACITY FACTOR FOR EGRESS COMPONENTS (EXIT DOORS) W/SPRINKLER: 0.15

NOT FOR CONSTRUCTION

17.NOV.2021
100% DESIGN SUBMITTAL

ba
belzberg architects
2740 MAIN STREET
SANTA MONICA, CA 90405
310.453.9611
www.belzbergarchitects.com

#	DESCRIPTION	DATE

HOLOCAUST MUSEUM LA EXPANSION

100 THE GROVE DRIVE
LOS ANGELES, CA 90036

OCCUPANCY AND EGRESS (EXISTING)

PROJECT NUMBER: 17009

G050

11/18/2021 3:10:32 PM

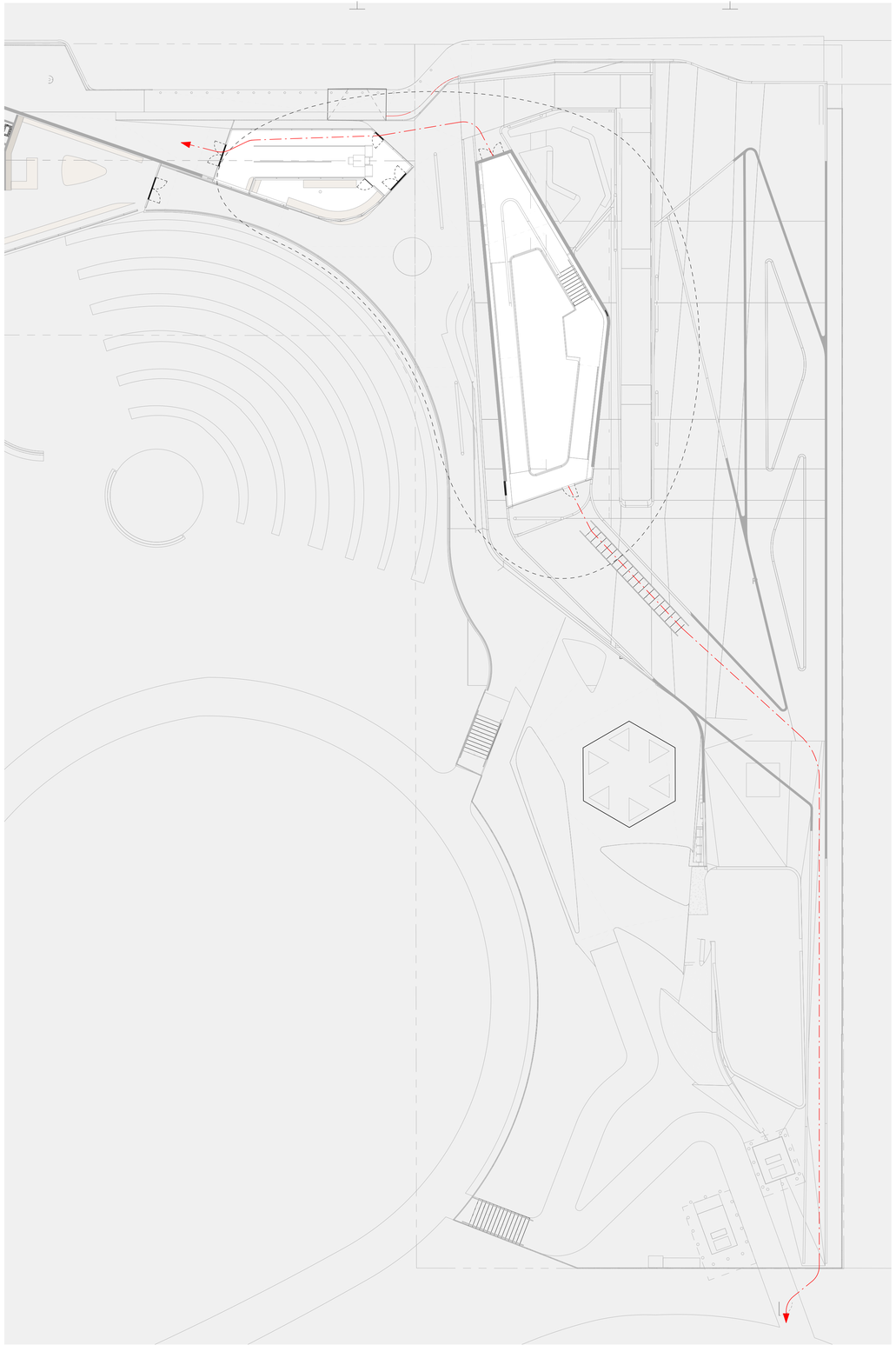

EXRF 2
SCALE: 1/16" = 1'-0"

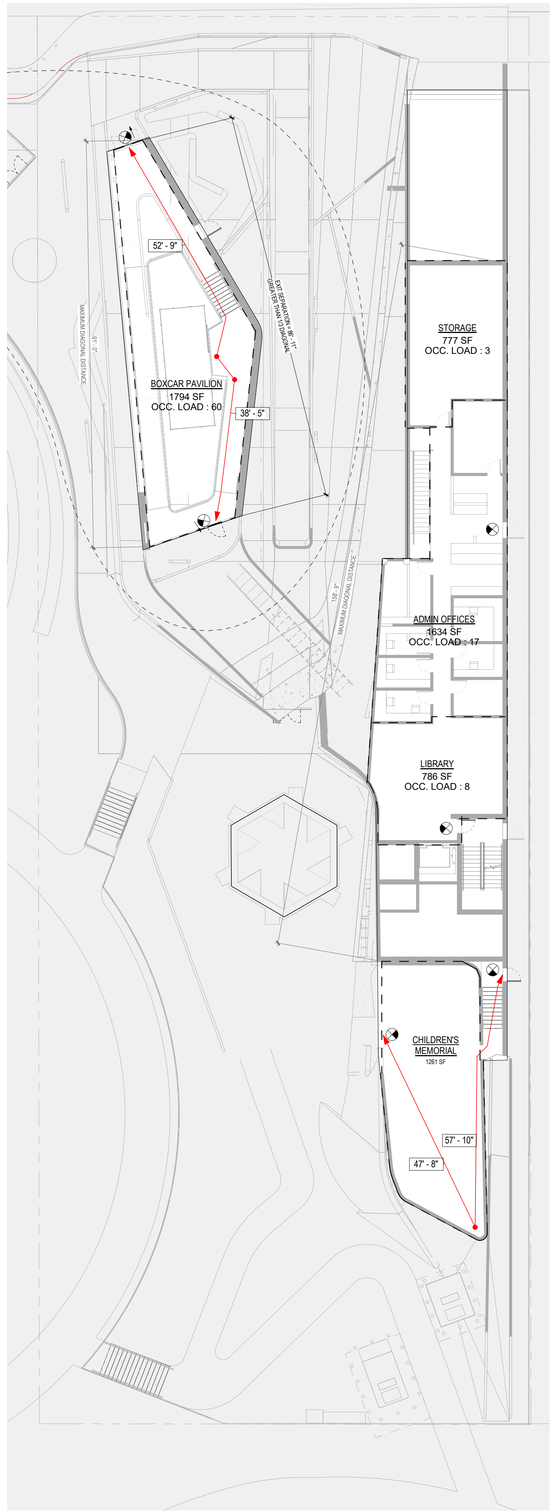

EX02 1
SCALE: 1/16" = 1'-0"

OCCUPANCY CALCULATION - EX02

NAME	AREA	LEVEL	OCC. GROUP	LOAD FACTOR	OCC. LOAD
EX02					
LIBRARY	786 SF	EX02	A-3	100 SF	8
ADMIN OFFICES	1634 SF	EX02	A-3	100 SF	17
STORAGE	777 SF	EX02	A-3	300 SF	3
BOXCAR PAVILION	1794 SF	EX02	A-3	30 SF	60
CHILDREN'S MEMORIAL	1261 SF	EX02			
EX02: 5					88
OCCUPANT LOAD TOTAL					88

LEGEND & NOTES

- COMMON PATH OF TRAVEL
- EXIT ACCESS
- PATH TO PUBLIC WAY
- TWO-WAY POINT
- EXIT SIGN, DIRECTIONAL ARROW WHERE OCCURS

DOOR
- OCCUPANT LOAD
- WIDTH FACTOR
- REQUIRED WIDTH (IN))
- ACTUAL WIDTH (IN)

STAIR
- OCCUPANT LOAD
- WIDTH FACTOR
- REQUIRED WIDTH (IN))
- ACTUAL WIDTH (IN)

- BUILDING WILL BE FULLY SPRINKLERED

- PER CBC 2019 TABLE 1006.2.1
MAX. COMMON PATH OF EGRESS TRAVEL DISTANCE W/SPRINKLER SYSTEM FOR OCCUPANCY A : 75'

- PER CBC 2019 TABLE 1017.2
MAX. EXIT ACCESS TRAVEL DISTANCE W/SPRINKLER FOR OCCUPANCY A: 250'

- PER EXCEPTION CBC 2019 SECTION 1005.3.1
REQUIRED EGRESS CAPACITY FACTOR FOR STAIRWAYS W/SPRINKLER: 0.2

- PER EXCEPTION CBC 2019 SECTION 1005.3.2
REQUIRED EGRESS CAPACITY FACTOR FOR EGRESS COMPONENTS (EXIT DOORS) W/SPRINKLER: 0.15

NOT FOR CONSTRUCTION

17.NOV.2021
100% DESIGN SUBMITTAL

ba
belzberg architects
2740 MAIN STREET
SANTA MONICA, CA 90405
310.453.9611
www.belzbergarchitects.com

#	DESCRIPTION	DATE

HOLOCAUST MUSEUM LA EXPANSION

100 THE GROVE DRIVE
LOS ANGELES, CA 90036

OCCUPANCY AND EGRESS (BOXCAR)

PROJECT NUMBER: 17009

G051

11/18/2021 3:10:52 PM

OCCUPANCY CALCULATION - 02 MEZZANINE					
NAME	AREA	LEVEL	OCC. GROUP	LOAD FACTOR	OCC. LOAD
02 MEZZANINE					
SOUND BOOTH	350 SF	02 MEZZANINE	A-3	100 SF	4
02 MEZZANINE: 1					4
OCCUPANT LOAD TOTAL					4

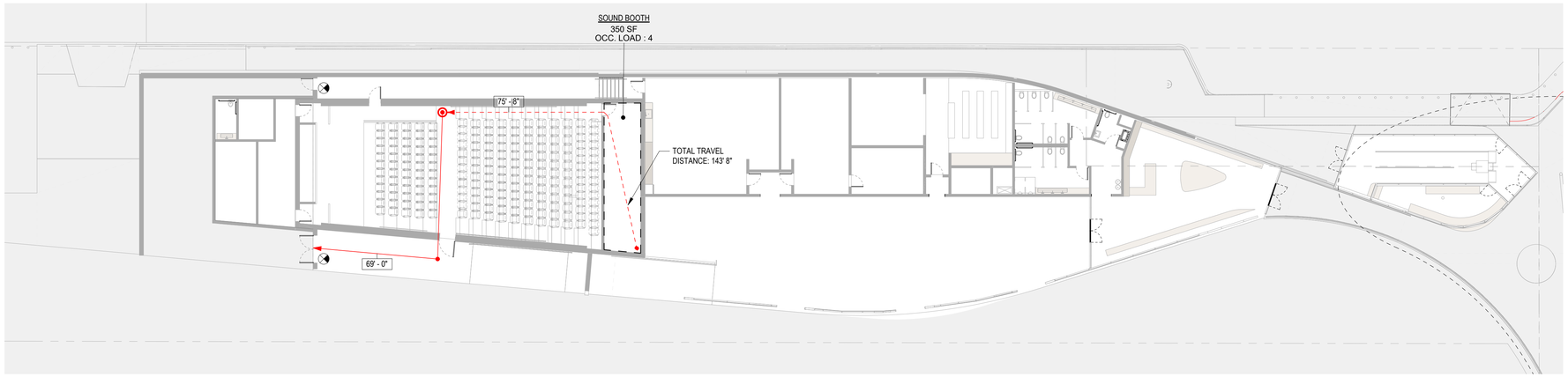

02 MEZZANINE
SCALE: 1/16" = 1'-0" 2

OCCUPANCY CALCULATION - 01 GALLERY					
NAME	AREA	LEVEL	OCC. GROUP	LOAD FACTOR	OCC. LOAD
01 GALLERY					
AUDITORIUM	2381 SF	01 GALLERY	A-3	12 SF	197
CORRIDOR B	523 SF	01 GALLERY	A-3		
STORAGE	714 SF	01 GALLERY	S-2	300 SF	3
GR	99 SF	01 GALLERY	A-3	15 SF	7
CLASSROOM A	1003 SF	01 GALLERY	A-3	20 SF	51
CLASSROOM B	518 SF	01 GALLERY	A-3	20 SF	26
DIT	793 SF	01 GALLERY	A-3	26 SF	31
OFFICE	234 SF	01 GALLERY	A-3	100 SF	3
EQUIP	64 SF	01 GALLERY	A-3		
VESTIBULE	161 SF	01 GALLERY	A-3		
GALLERY	2661 SF	01 GALLERY	A-3	30 SF	89
RESTROOM (W)	288 SF	01 GALLERY	A-3	100 SF	3
RESTROOM (M)	216 SF	01 GALLERY	A-3	100 SF	3
GIFT SHOP	1202 SF	01 GALLERY	A-3	50 SF	25
RESTROOM (U)	66 SF	01 GALLERY	A-3	100 SF	1
01 GALLERY: 15					439
OCCUPANT LOAD TOTAL					439

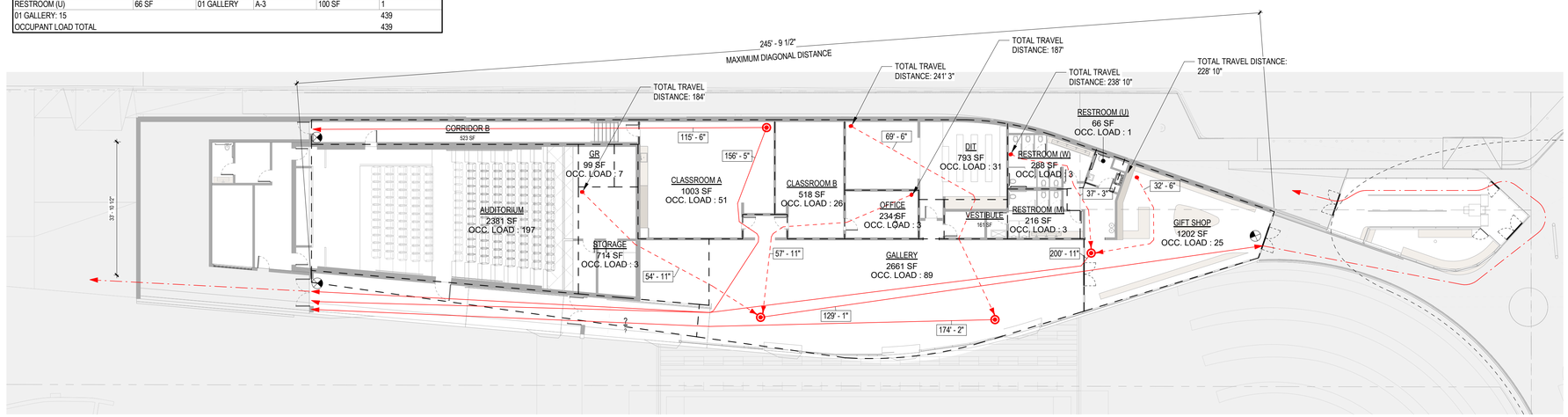

01 GALLERY
SCALE: 1/16" = 1'-0" 1

LEGEND & NOTES

- COMMON PATH OF TRAVEL
- EXIT ACCESS
- PATH TO PUBLIC WAY
- TWO-WAY POINT
- EXIT SIGN, DIRECTIONAL ARROW WHERE OCCURS

DOOR
- OCCUPANT LOAD
- WIDTH FACTOR
- REQUIRED WIDTH (IN))
- ACTUAL WIDTH (IN)

STAIR
- OCCUPANT LOAD
- WIDTH FACTOR
- REQUIRED WIDTH (IN))
- ACTUAL WIDTH (IN)

- BUILDING WILL BE FULLY SPRINKLERED

- PER CBC 2019 TABLE 1006.2.1
MAX. COMMON PATH OF EGRESS TRAVEL DISTANCE W/SPRINKLER SYSTEM FOR OCCUPANCY A : 75'

- PER CBC 2019 TABLE 1017.2
MAX. EXIT ACCESS TRAVEL DISTANCE W/SPRINKLER FOR OCCUPANCY A: 250'

- PER EXCEPTION CBC 2019 SECTION 1005.3.1
REQUIRED EGRESS CAPACITY FACTOR FOR STAIRWAYS W/SPRINKLER: 0.2

- PER EXCEPTION CBC 2019 SECTION 1005.3.2
REQUIRED EGRESS CAPACITY FACTOR FOR EGRESS COMPONENTS (EXIT DOORS) W/SPRINKLER: 0.15

NOT FOR CONSTRUCTION

17.NOV.2021
100% DESIGN SUBMITTAL

ba
belzberg architects
2740 MAIN STREET
SANTA MONICA, CA 90405
310.453.9611
www.belzbergarchitects.com

#	DESCRIPTION	DATE

HOLOCAUST MUSEUM LA EXPANSION

100 THE GROVE DRIVE
LOS ANGELES, CA 90036

OCCUPANCY AND EGRESS (NEW)

PROJECT NUMBER: 17009

G052

11/18/2021 3:11:04 PM

INFORMATION BULLETIN / PUBLIC - BUILDING CODE

REFERENCE NO.: LABC Sec. 11B-226.4, 307,308, 309,704,902 Effective: 01/01/2020

DOCUMENT NO.: **P/BC 2020-089** Revised:

Previously Issued As: P/BC 2017-089

ACCESSIBILITY DETAILS FOR OBSTRUCTIONS, REACH RANGES, TELEPHONES & BABY CHANGING STATIONS

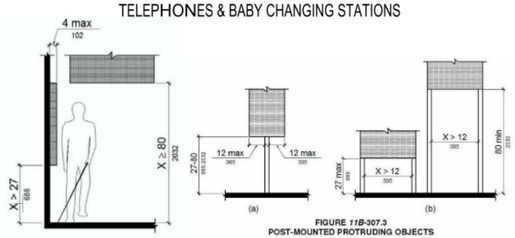

FIGURE *11B*-307.2
LIMITS OF PROTRUDING OBJECTS

FIGURE *11B*-307.3
POST-MOUNTED PROTRUDING OBJECTS

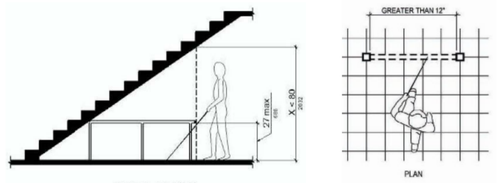

FIGURE *11B*-307.4
VERTICAL CLEARANCE

THESE DIAGRAMS ILLUSTRATE THE SPECIFIC REQUIREMENTS OF THESE REGULATIONS AND ARE INTENDED ONLY AS AN AID FOR BUILDING DESIGN AND CONSTRUCTION

As a covered entity under Title II of the Americans with Disabilities Act, the City of Los Angeles does not discriminate on the basis of disability and, upon request, will provide reasonable accommodation to ensure equal access to its programs, services and activities.

THESE DIAGRAMS ILLUSTRATE THE SPECIFIC REQUIREMENTS OF THESE REGULATIONS AND ARE INTENDED ONLY AS AN AID FOR BUILDING DESIGN AND CONSTRUCTION.

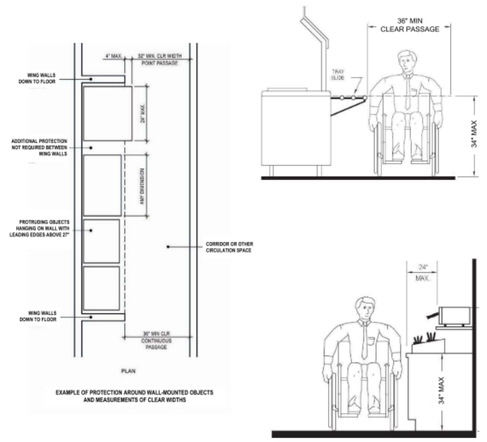

EXAMPLE OF PROTECTION AROUND WALL-MOUNTED OBJECTS AND MEASUREMENTS OF CLEAR WIDTHS

As a covered entity under Title II of the Americans with Disabilities Act, the City of Los Angeles does not discriminate on the basis of disability and, upon request, will provide reasonable accommodation to ensure equal access to its programs, services and activities.

THESE DIAGRAMS ILLUSTRATE THE SPECIFIC REQUIREMENTS OF THESE REGULATIONS AND ARE INTENDED ONLY AS AN AID FOR BUILDING DESIGN AND CONSTRUCTION

REACH RANGE

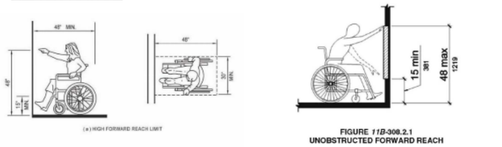

FIGURE *11B*-308.2.1
UNOBSTRUCTED FORWARD REACH

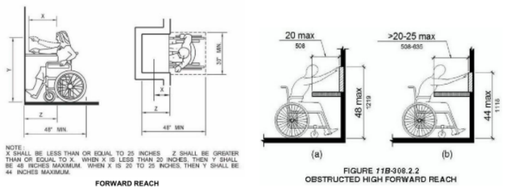

FORWARD REACH

FIGURE *11B*-308.2.2
OBSTRUCTED HIGH FORWARD REACH

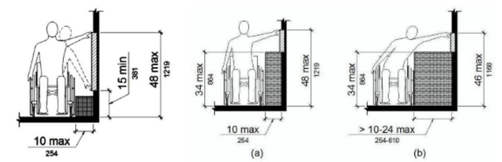

FIGURE *11B*-308.3.1
UNOBSTRUCTED SIDE REACH

FIGURE *11B*-308.3.2
OBSTRUCTED HIGH SIDE REACH

As a covered entity under Title II of the Americans with Disabilities Act, the City of Los Angeles does not discriminate on the basis of disability and, upon request, will provide reasonable accommodation to ensure equal access to its programs, services and activities.

THESE DIAGRAMS ILLUSTRATES THE SPECIFIC REQUIREMENTS OF THESE REGULATIONS AND ARE INTENDED ONLY AS AN AID FOR BUILDING DESIGN AND CONSTRUCTION.

TELEPHONES

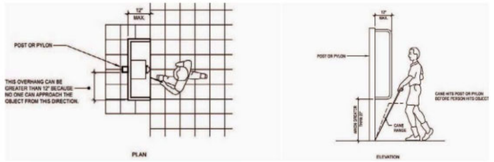

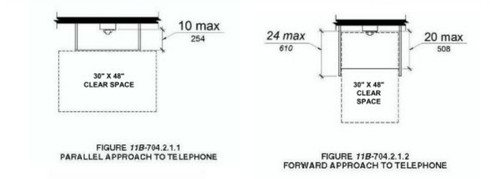

FIGURE *11B*-704.2.1.1
PARALLEL APPROACH TO TELEPHONE

FIGURE *11B*-704.2.1.2
FORWARD APPROACH TO TELEPHONE

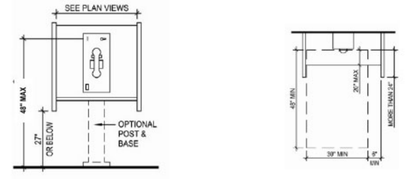

As a covered entity under Title II of the Americans with Disabilities Act, the City of Los Angeles does not discriminate on the basis of disability and, upon request, will provide reasonable accommodation to ensure equal access to its programs, services and activities.

THESE DIAGRAMS ILLUSTRATES THE SPECIFIC REQUIREMENTS OF THESE REGULATIONS AND ARE INTENDED ONLY AS AN AID FOR BUILDING DESIGN AND CONSTRUCTION.

BABY CHANGING TABLES

Note#1: Knee and toe clearance per 11B-306

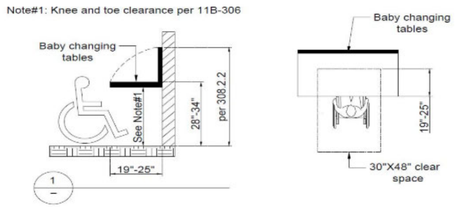

- Baby changing tables can be located in a Unisex (single-user or family) restroom.
- Baby changing tables when deployed shall not obstruct the required width of an accessible route (11B-226.4)

② Baby changing tables can be located in a common use area of a multiple accommodation toilet facility. When deployed it shall not obstruct the required width of an accessible route. (11B-226.4)

③ Baby changing tables shall not be located in an accessible toilet compartments within a multiple accommodation toilet facility.

Note: When a sign is provided to indicate the location of baby diaper changing station is shall comply with raised character,brail and visual character (11B-703). See Sign info bulletin IB P/BC 2017-091 for additional info.

As a covered entity under Title II of the Americans with Disabilities Act, the City of Los Angeles does not discriminate on the basis of disability and, upon request, will provide reasonable accommodation to ensure equal access to its programs, services and activities.

INFORMATION BULLETIN / PUBLIC - BUILDING CODE

REFERENCE NO.: LABC Sec.11B-403,404,405, 408,504,505,802 Effective: 01/01/2020

DOCUMENT NO.: **P/BC 2020-085** Revised: 12/02/2019

Previously Issued As: P/BC 2017-085

ACCESSIBILITY DETAILS FOR RAMPS, STAIRS & ELEVATORS

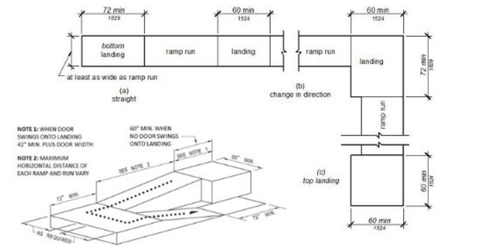

RAMP WITH INTERMEDIATE SWITCH BACK PLATFORM

FIGURE 11B-405.7 RAMP LANDING

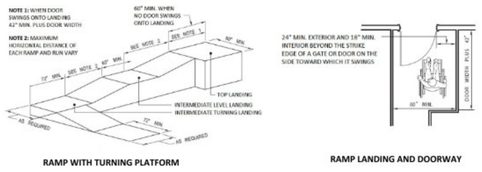

RAMP WITH TURNING PLATFORM

RAMP LANDING AND DOORWAY

As a covered entity under Title II of the Americans with Disabilities Act, the City of Los Angeles does not discriminate on the basis of disability and, upon request, will provide reasonable accommodation to ensure equal access to its programs, services and activities.

THESE DIAGRAMS ILLUSTRATE THE SPECIFIC REQUIREMENTS OF THESE REGULATIONS AND ARE INTENDED ONLY AS AN AID FOR BUILDING DESIGN AND CONSTRUCTION.

RAMPS

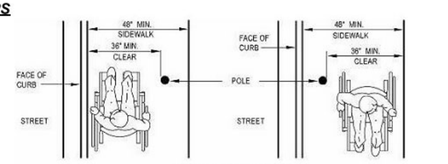

SIDEWALK OBSTRUCTIONS

11B-505.10.1 TOP AND BOTTOM EXTENSION AT RAMPS. Ramp handrails shall extend horizontally above the landing for 12 inches beyond the top and bottom of ramp runs. Extensions shall return to a wall, guard, or landing surface, or shall be continuous to the handrail of an adjacent ramp run.

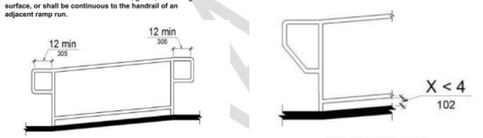

FIGURE *11B*-505.10.1
TOP AND BOTTOM HANDRAIL EXTENSION AT RAMPS

FIGURE *11B*-405.9.2
CURB OR BARRIER EDGE PROTECTION

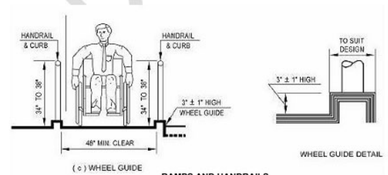

RAMPS AND HANDRAILS

As a covered entity under Title II of the Americans with Disabilities Act, the City of Los Angeles does not discriminate on the basis of disability and, upon request, will provide reasonable accommodation to ensure equal access to its programs, services and activities.

THESE DIAGRAMS ILLUSTRATE THE SPECIFIC REQUIREMENTS OF THESE REGULATIONS AND ARE INTENDED ONLY AS AN AID FOR BUILDING DESIGN AND CONSTRUCTION.

DOORWAYS AT RAMP LANDINGS

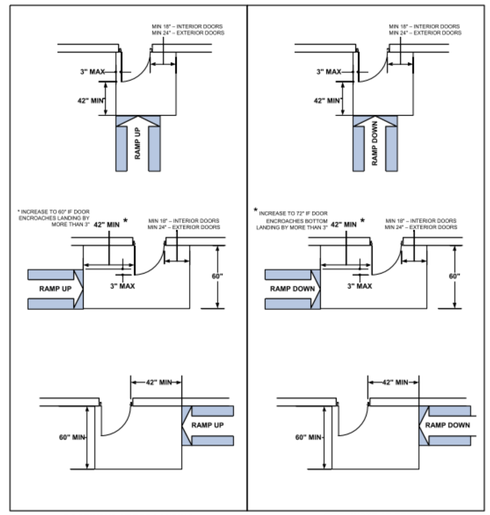

DOORWAYS AT TOP LANDING SPACE OF A RAMP

DOORWAYS AT BOTTOM LANDING SPACE OF A RAMP

As a covered entity under Title II of the Americans with Disabilities Act, the City of Los Angeles does not discriminate on the basis of disability and, upon request, will provide reasonable accommodation to ensure equal access to its programs, services and activities.

NOT FOR CONSTRUCTION

17.NOV.2021
100% DESIGN SUBMITTAL

ba
belzberg architects
2740 MAIN STREET
SANTA MONICA, CA 90405
310.453.9611
www.belzbergarchitects.com

#	DESCRIPTION	DATE

HOLOCAUST MUSEUM LA EXPANSION

100 THE GROVE DRIVE
LOS ANGELES, CA 90036

ACCESSIBILITY DIAGRAMS

PROJECT NUMBER: 17009

G056

11/18/2021 3:11:05 PM

THESE DIAGRAMS ILLUSTRATE THE SPECIFIC REQUIREMENTS OF THESE REGULATIONS AND ARE INTENDED ONLY AS AN AID FOR BUILDING DESIGN AND CONSTRUCTION.

STAIRWAYS

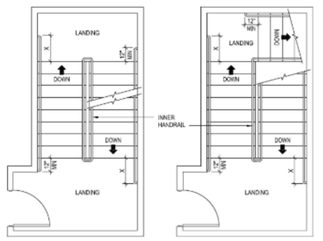

NOTE: INNER HANDRAIL AT LANDINGS OF STAIRS THAT DOUBLE BACK OR IMMEDIATELY TURN SHALL BE CONTINUOUS AND SHALL NOT EXTEND INTO LANDING OR ACCESSIBLE ROUTE OF TRAVEL

X = EXTENSION OF HANDRAIL SHALL BE EQUAL TO THE TREAD WIDTH PLUS 12 INCHES MINIMUM

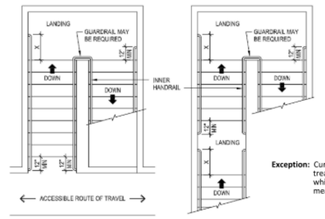

Exception: Curved stairways with winder treads are permitted at stairs which are not part of a required means of egress.

11B-504 STAIRWAYS

THESE DIAGRAMS ILLUSTRATE THE SPECIFIC REQUIREMENTS OF THESE REGULATIONS AND ARE INTENDED ONLY AS AN AID FOR BUILDING DESIGN AND CONSTRUCTION.

STAIRS

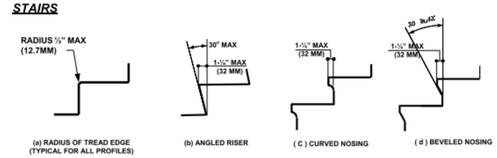

(a) RADIUS OF TREAD EDGE (TYPICAL FOR ALL PROFILES) (b) ANGLED RISER (C) CURVED NOSING (d) BEVELED NOSING

FIGURE 11B-504.5
STAIR NOSINGS

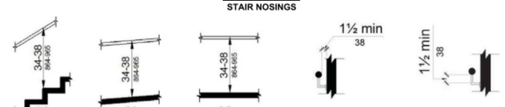

(a) stairs (b) ramps (c) walking surfaces

FIGURE 11B-505.4
HANDRAIL HEIGHT

FIGURE 11B-505.5
HANDRAIL CLEARANCE

FIGURE 11B-505.6
HORIZONTAL PROJECTIONS BELOW GRIPPING SURFACE

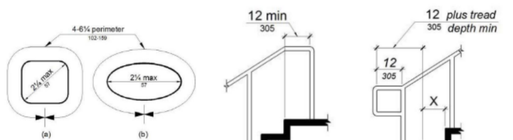

FIGURE 11B-505.7.2
HANDRAIL NON-CIRCULAR CROSS SECTION

FIGURE 11B-505.10.2
TOP HANDRAIL EXTENSION AT STAIRS

FIGURE 11B-505.10.3
BOTTOM HANDRAIL EXTENSION AT STAIRS

INFORMATION BULLETIN / PUBLIC - BUILDING CODE

REFERENCE NO.: LABC Sec.11B-305,604,605 Effective: 01/01/2020
DOCUMENT NO.: P/BC 2020-087 Revised:
Previously Issued As: P/BC 2017-087

ACCESSIBILITY DETAILS FOR RESTROOMS AND DRINKING FOUNTAINS

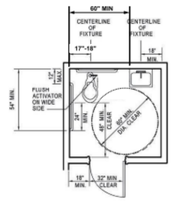

SINGLE-ACCOMMODATION TOILET FACILITY

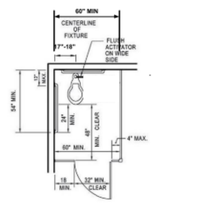

ACCESSIBLE WATER CLOSET COMPARTMENT WITHIN A MULTIPLE-ACCOMMODATION TOILET FACILITY

Doors shall not swing into the clear floor space or clearance required for any fixture. Other than the door to the accessible water closet compartment, a door in any position, may encroach into the turning space by 12 inches maximum. (11B-603.2.3)
Exceptions: (2) Where the toilet room or bathing room is for individual use and a clear floor space complying with Section 11B-305.3 is provided within the room beyond the arc of the door swing, doors shall be permitted to swing into the clear floor space or clearance required for any fixture.

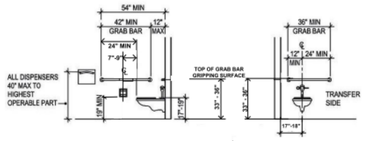

FIGURE *11B*-604.7
DISPENSER OUTLET LOCATION

FIGURE *11B*-604.5.1
SIDE WALL GRAB BAR AT WATER CLOSETS

FIGURE *11B*-604.5.2
REAR WALL GRAB BAR AT WATER CLOSETS

THESE DIAGRAMS ILLUSTRATE THE SPECIFIC REQUIREMENTS OF THESE REGULATIONS AND ARE INTENDED ONLY AS AN AID FOR BUILDING DESIGN AND CONSTRUCTION.

THESE DIAGRAMS ILLUSTRATE THE SPECIFIC REQUIREMENTS OF THESE REGULATIONS AND ARE INTENDED ONLY AS AN AID FOR BUILDING DESIGN AND CONSTRUCTION.

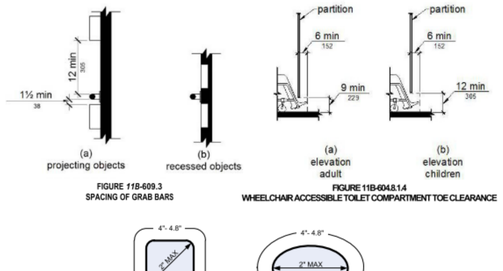

(a) projecting objects (b) recessed objects (a) elevation adult (b) elevation children

FIGURE *11B*-609.3
SPACING OF GRAB BARS

FIGURE 11B-604.8.1.4
WHEELCHAIR ACCESSIBLE TOILET COMPARTMENT TOE CLEARANCE

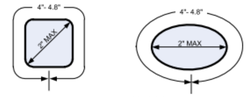

FIGURE 11B-609.2.2
GRAB BAR NON-CIRCULAR CROSS SECTION

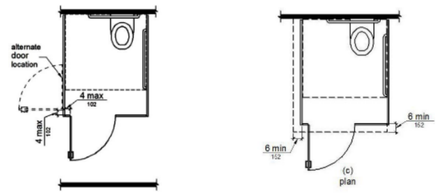

FIGURE 11B-604.8.1.2
WHEELCHAIR ACCESSIBLE TOILET COMPARTMENT DOORS

FIGURE *11B*-604.8.1.4
WHEELCHAIR ACCESSIBLE TOILET COMPARTMENT TOE CLEARANCE

THESE DIAGRAMS ILLUSTRATE THE SPECIFIC REQUIREMENTS OF THESE REGULATIONS AND ARE INTENDED ONLY AS AN AID FOR BUILDING DESIGN AND CONSTRUCTION.

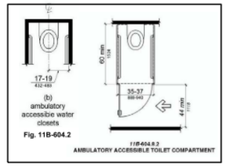

FIGURE 11B-604.8.1.1.2 - MANEUVERING SPACE WITH SIDE-OPENING DOOR

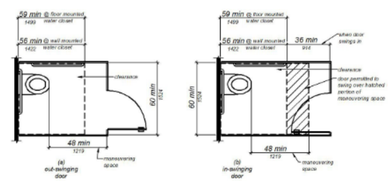

FIGURE 11B-604.8.1.1.3 - MANEUVERING SPACE WITH END-OPENING DOOR

THESE DIAGRAMS ILLUSTRATE THE SPECIFIC REQUIREMENTS OF THESE REGULATIONS AND ARE INTENDED ONLY AS AN AID FOR BUILDING DESIGN AND CONSTRUCTION.

SINK / URINAL

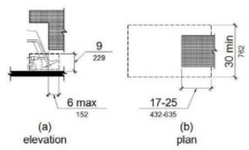

(a) elevation (b) plan

FIGURE 11B-306.2 - TOE CLEARANCE

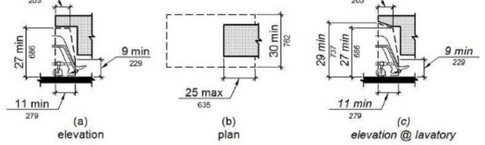

(a) elevation (b) plan (c) elevation @ lavatory

FIGURE 11B-306.3 - KNEE CLEARANCE

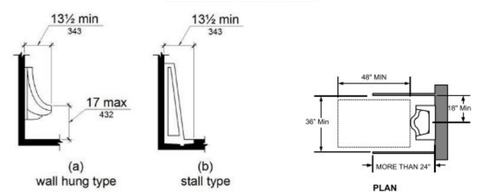

(a) wall hung type (b) stall type PLAN

FIGURE 11B-605.2 - HEIGHT AND DEPTH OF URINALS

THESE DIAGRAMS ILLUSTRATE THE SPECIFIC REQUIREMENTS OF THESE REGULATIONS AND ARE INTENDED ONLY AS AN AID FOR BUILDING DESIGN AND CONSTRUCTION.

DRINKING FOUNTAINS

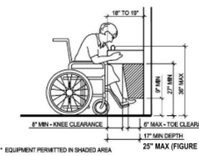

* EQUIPMENT PERMITTED IN SHADED AREA

SPOUT HEIGHT AND KNEE CLEARANCE AT DRINKING FOUNTAINS

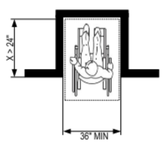

FIGURE 11B-305.7.1
MANEUVERING CLEARANCE IN AN ALCOVE, FORWARD APPROACH

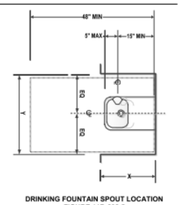

DRINKING FOUNTAIN SPOUT LOCATION
FIGURE 11B-602.5

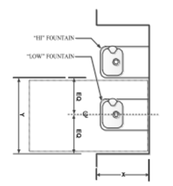

PLAN OF "HI-LOW" DRINKING FOUNTAIN

11B-602.6 WATER FLOW.
THE SPOUT SHALL PROVIDE A FLOW OF WATER 4 INCHES HIGH MINIMUM AND SHALL BE LOCATED 5 INCHES MAXIMUM FROM THE FRONT OF THE UNIT. THE ANGLE OF THE WATER STREAM SHALL BE MEASURED HORIZONTALLY RELATIVE TO THE FRONT FACE OF THE UNIT. WHERE SPOUTS ARE LOCATED LESS THAN 3 INCHES OF THE FRONT OF THE UNIT, THE ANGLE OF THE WATER STREAM SHALL BE 30 DEGREES MAXIMUM. WHERE SPOUTS ARE LOCATED BETWEEN 3 INCHES AND 5 INCHES MAXIMUM FROM THE FRONT OF THE UNIT, THE ANGLE OF THE WATER STREAM SHALL BE 15 DEGREES MAXIMUM.

11B-602.7 DRINKING FOUNTAINS FOR STANDING PERSONS.
SPOUT OUTLETS OF DRINKING FOUNTAINS FOR STANDING PERSONS SHALL BE 38 INCHES MINIMUM AND 43 INCHES MAXIMUM ABOVE THE FINISH FLOOR OR GROUND.

11B-602.9 PEDESTRIAN PROTECTION.
ALL DRINKING FOUNTAINS SHALL EITHER BE LOCATED COMPLETELY WITHIN ALCOVES, POSITIONED COMPLETELY BETWEEN WING WALLS, OR OTHERWISE POSITIONED SO AS NOT TO ENCROACH INTO PEDESTRIAN WAYS. THE PROTECTED AREA WITHIN WHICH A DRINKING FOUNTAIN IS LOCATED SHALL BE 32 INCHES WIDE MINIMUM AND 18 INCHES DEEP MINIMUM, AND SHALL COMPLY WITH SECTION 11B-305.7. WHEN USED, WING WALLS OR BARRIERS SHALL PROJECT HORIZONTALLY AT LEAST AS FAR AS THE DRINKING FOUNTAIN AND TO WITHIN 6 INCHES VERTICALLY FROM THE FLOOR OR GROUND SURFACE.

NOTE:
IF X < 15" MIN. ALCOVE DEPTH. THEN Y = 32" MIN.
IF ALCOVE DEPTH (X) IS GREATER THAN 24", THEN ALCOVE WIDTH (Y) MUST BE MINIMUM OF 36" CLEAR.

CLEAR FLOOR SPACE AT "HI-LOW" DRINKING FOUNTAIN ALCOVES

INFORMATION BULLETIN / PUBLIC - BUILDING CODE

REFERENCE NO.: LABC Sec. 11B-304,305,404 Effective: 01/01/2020
DOCUMENT NO.: P/BC 2020-086 Revised:
Previously Issued As: P/BC 2017-086

ACCESSIBILITY DETAILS FOR DOORS, MANEUVERING SPACES & ROUTES

UNLESS SPECIFICALLY STATED OTHERWISE, FIGURES ARE PROVIDED FOR INFORMATIONAL PURPOSES ONLY. (11B-104.3 FIGURES)

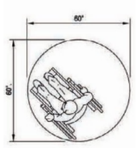

(a) 60 INCHES DIAMETER SPACE

WHEELCHAIR TURNING SPACE

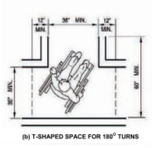

(b) T-SHAPED SPACE FOR 180° TURNS

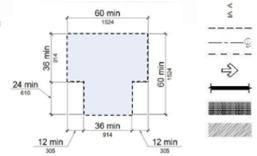

FIGURE *11B*-304.3.2
T-SHAPED TURNING SPACE

Convention	Description
36 / 914	dimension showing English units (in inches unless otherwise specified) above the line and SI units (in millimeters unless otherwise specified) below the line
6 / 152	dimension for small measurements
33-36 / 838-914	dimension showing a range with minimum - maximum
min	minimum
max	maximum
>	greater than
≥	greater than or equal to
<	less than
≤	less than or equal to
	boundary of clear floor space or maneuvering clearance
	centerline
	a permitted element or its extension
	direction of travel or approach
	a wall, floor, ceiling or other element cut in section or plan
	a highlighted element in elevation or plan
	location zone of element, control or feature

FIGURE 11B-104
GRAPHIC CONVENTION FOR FIGURES

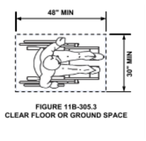

FIGURE 11B-305.3
CLEAR FLOOR OR GROUND SPACE

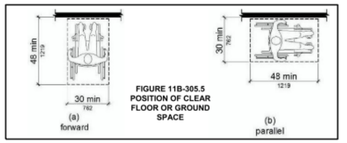

FIGURE 11B-305.5
POSITION OF CLEAR FLOOR OR GROUND SPACE

NOT FOR CONSTRUCTION

17.NOV.2021
100% DESIGN SUBMITTAL

ba
belzberg architects
2740 MAIN STREET
SANTA MONICA, CA 90405
310.453.9611
www.belzbergarchitects.com

DESCRIPTION DATE

HOLOCAUST MUSEUM LA EXPANSION

100 THE GROVE DRIVE
LOS ANGELES, CA 90036

ACCESSIBILITY DIAGRAMS

PROJECT NUMBER: 17009

G057

11/18/2021 3:11:06 PM

THESE DIAGRAMS ILLUSTRATE THE SPECIFIC REQUIREMENTS OF THESE REGULATIONS AND ARE INTENDED ONLY AS AN AID FOR BUILDING DESIGN AND CONSTRUCTION.

DOORS & MANEUVERING SPACE

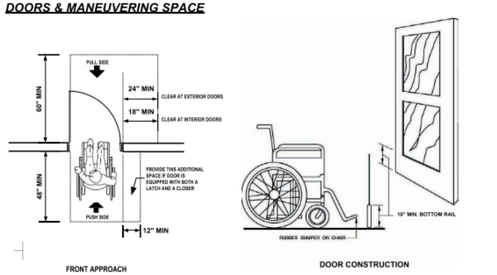

FRONT APPROACH

DOOR CONSTRUCTION

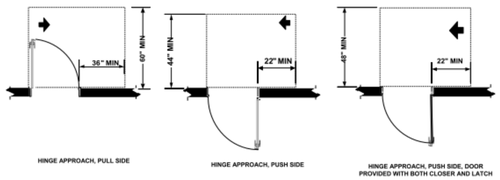

HINGE APPROACH, PULL SIDE

HINGE APPROACH, PUSH SIDE

HINGE APPROACH, PUSH SIDE, DOOR PROVIDED WITH BOTH CLOSER AND LATCH

FIGURE 11B-404.2.4.1
MANEUVERING CLEARANCES AT MANUAL SWINGING DOORS AND GATES

As a covered entity under Title II of the Americans with Disabilities Act, the City of Los Angeles does not discriminate on the basis of disability and, upon request, will provide reasonable accommodation to ensure equal access to its programs, services and activities.

THESE DIAGRAMS ILLUSTRATE THE SPECIFIC REQUIREMENTS OF THESE REGULATIONS AND ARE INTENDED ONLY AS AN AID FOR BUILDING DESIGN AND CONSTRUCTION.

DOORS & MANEUVERING SPACE

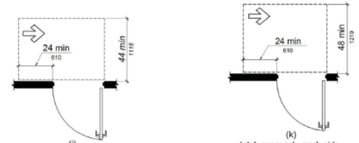

FIGURE 11B-404.2.4.1—continued
MANEUVERING CLEARANCES AT MANUAL SWINGING DOORS AND GATES

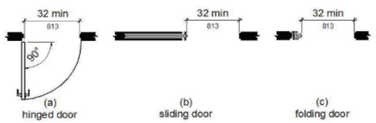

FIGURE 11B-404.2.3
CLEAR WIDTH OF DOORWAYS

TABLE 11B-404.2.3
MANEUVERING CLEARANCES AT MANUAL SWINGING DOORS AND GATES

TYPE OF USE		MINIMUM MANEUVERING CLEARANCE	
APPROACH DIRECTION	DOOR or GATE SIDE	PERPENDICULAR TO DOORWAY	PARALLEL TO DOORWAY (beyond latch side unless noted)
From front	Pull	60 inches	18 inches
From front	Push	48 inches	0 inches
From hinge side	Pull	60 inches	36 inches
From hinge side	Push	44 inches	22 inches
From latch side	Pull	60 inches	24 inches
From latch side	Push	44 inches	24 inches

1. ADD 12 INCHES IF CLOSER AND LATCH ARE PROVIDED.
2. ADD 4 INCHES IF CLOSER AND LATCH ARE PROVIDED.
3. BEYOND HINGE SIDE.
4. ADD 4 INCHES IF CLOSER IS PROVIDED.
5. ADD 6 INCHES AT EXTERIOR SIDE OF EXTERIOR DOORS.

As a covered entity under Title II of the Americans with Disabilities Act, the City of Los Angeles does not discriminate on the basis of disability and, upon request, will provide reasonable accommodation to ensure equal access to its programs, services and activities.

THESE DIAGRAMS ILLUSTRATE THE SPECIFIC REQUIREMENTS OF THESE REGULATIONS AND ARE INTENDED ONLY AS AN AID FOR BUILDING DESIGN AND CONSTRUCTION.

DOORS & MANEUVERING SPACE

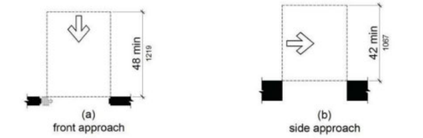

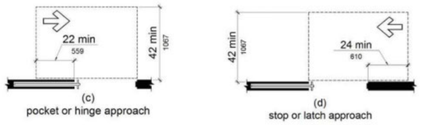

FIGURE 11B-404.2.4.2
MANEUVERING CLEARANCES AT DOORWAYS WITHOUT DOORS, SLIDING DOORS, GATES, AND FOLDING DOORS

TABLE 11B-404.2.4.2
MANEUVERING CLEARANCES AT DOORWAYS WITHOUT DOORS OR GATES MANUAL SLIDING DOORS AND MANUAL FOLDING DOORS

	MINIMUM MANEUVERING CLEARANCE	
Approach direction	Perpendicular to doorway	Parallel to doorway (beyond stop/latch side unless noted)
From Front	48 inches	0 inches
From Side[1]	42 inches	0 inches
From pocket/hinge side	42 inches	22 inches
From stop/latch side	42 inches	24 inches

1. Doorway with no door only.
2. Beyond pocket/hinge side

As a covered entity under Title II of the Americans with Disabilities Act, the City of Los Angeles does not discriminate on the basis of disability and, upon request, will provide reasonable accommodation to ensure equal access to its programs, services and activities.

THESE DIAGRAMS ILLUSTRATE THE SPECIFIC REQUIREMENTS OF THESE REGULATIONS AND ARE INTENDED ONLY AS AN AID FOR BUILDING DESIGN AND CONSTRUCTION.

DOORS & MANEUVERING SPACE

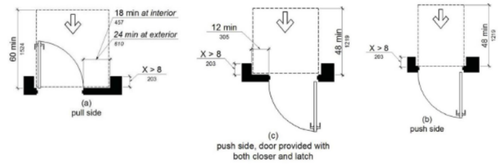

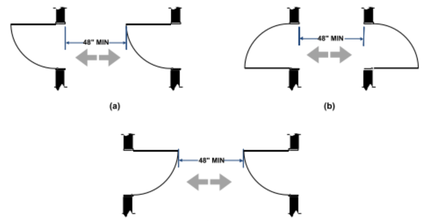

FIGURE 11B-404.2.6
DOORS IN SERIES AND GATES IN SERIES

As a covered entity under Title II of the Americans with Disabilities Act, the City of Los Angeles does not discriminate on the basis of disability and, upon request, will provide reasonable accommodation to ensure equal access to its programs, services and activities.

THESE DIAGRAMS ILLUSTRATE THE SPECIFIC REQUIREMENTS OF THESE REGULATIONS AND ARE INTENDED ONLY AS AN AID FOR BUILDING DESIGN AND CONSTRUCTION.

ACCESSIBLE ROUTES

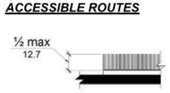

FIGURE 11B-302.2
CARPET PILE HEIGHT

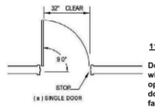

11B-404.2.3

Door openings shall provide a clear width of 32 inches minimum. Clear openings of doorways with swinging doors shall be measured between the face of the door and the stop, with the door open 90 degrees. Openings more than 24 inches deep shall provide a clear opening of 36 inches minimum. There shall be no projections into the required clear opening width lower than 34 inches above the finish floor or ground. Projections into the clear opening width between 34 inches and 80 inches above the finish floor or ground shall not exceed 4 inches.

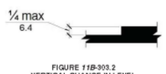

FIGURE 11B-303.2
VERTICAL CHANGE IN LEVEL

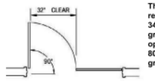

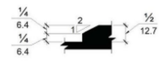

FIGURE 11B-303.3
BEVELED CHANGE IN LEVEL

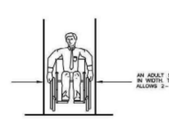

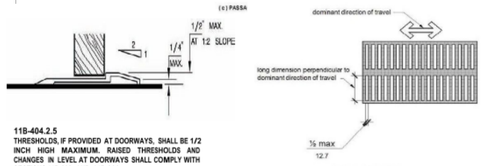

11B-404.2.5
THRESHOLDS, IF PROVIDED AT DOORWAYS, SHALL BE 1/2 INCH HIGH MAXIMUM. RAISED THRESHOLDS AND CHANGES IN LEVEL AT DOORWAYS SHALL COMPLY WITH SECTIONS 11B-302 AND 11B-303.

FIGURE 11B-302.3
ELONGATED OPENINGS IN FLOOR OR GROUND SURFACES

As a covered entity under Title II of the Americans with Disabilities Act, the City of Los Angeles does not discriminate on the basis of disability and, upon request, will provide reasonable accommodation to ensure equal access to its programs, services and activities.

THESE DIAGRAMS ILLUSTRATE THE SPECIFIC REQUIREMENTS OF THESE REGULATIONS AND ARE INTENDED ONLY AS AN AID FOR BUILDING DESIGN AND CONSTRUCTION.

ACCESSIBLE ROUTES

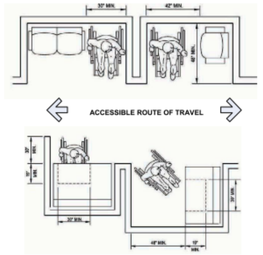

11B-403.5.1
SEE CLEAR WIDTH AND EXCEPTIONS REQUIREMENTS

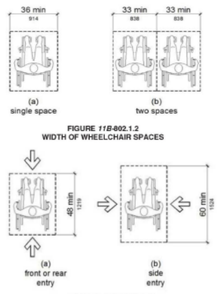

FIGURE 11B-802.1.2
WIDTH OF WHEELCHAIR SPACES

FIGURE 11B-802.1.3
DEPTH OF WHEELCHAIR SPACES

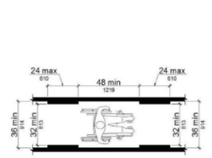

FIGURE 11B-403.5.1
CLEAR WIDTH OF AN ACCESSIBLE ROUTE

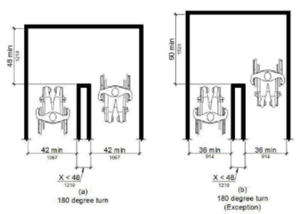

FIGURE 11B-403.5.2
CLEAR WIDTH AT TURN

As a covered entity under Title II of the Americans with Disabilities Act, the City of Los Angeles does not discriminate on the basis of disability and, upon request, will provide reasonable accommodation to ensure equal access to its programs, services and activities.

INFORMATION BULLETIN / PUBLIC - BUILDING CODE
REFERENCE NO: Various
DOCUMENT NO: P/BC 2020-143
PREVIOUSLY ISSUED AS: 2017-143
EFFECTIVE: 01-01-2020
REVISED:

GENERAL NOTES FOR COMMERCIAL ACCESSIBILITY

NOTE: Code references are to the 2020 edition of the Los Angeles Building Code

The State of California delegates authority to the local jurisdiction to ensure compliance with Title 24, Part 2 of the California Code of Regulations. The following general notes indicate specific areas of Title 24, Part 2 which are applicable to your project. Please be aware that the owner(s) of the building and his/her consultants are responsible for compliance with the most current Federal Regulations contained in the Americans with Disabilities Act (ADA) and Fair Housing Act (FHA). Where the ADA & FHA requirements exceed those contained in Title 24, Part 2, it is the responsibility of the owners and their consultants to ensure compliance with the most current ADA & FHA regulations, as the City is not authorized to review plans or inspect projects for ADA & FHA compliance.

The following, applicable, general notes shall be provided on the plans.

A. APPLICATION AND ADMINISTRATION

1. Public accommodations shall maintain in operable working condition those features of facilities and equipment that are required to be accessible to and useable by persons with disabilities. Isolated or temporary interruptions in service or accessibility due to maintenance or repairs shall be permitted. **§11B-108**

B. BUILDING BLOCKS

FLOOR OR GROUND SURFACES

1. Floor and ground surfaces shall be stable, firm, and slip resistant. **§11B-302.1**
2. Carpet or carpet tile shall be securely attached and shall have a firm cushion, pad, or backing or no cushion or pad. Carpet or carpet tile shall have a level loop, textured loop, level cut pile, or level cut/uncut pile texture. Pile height shall be ½ inch maximum. **§11B-302.2, Figure 11B-302.2**

CHANGES IN LEVEL

3. Vertical changes in level for floor or ground surfaces may be ¼ inch high maximum and without edge treatment. Changes in level greater than ¼ inch and not exceeding ½ inch in height shall be beveled with a slope not steeper than 1:2. **§11B-303, Figures 11B-303.2 & 11B-303.3**
4. Changes in level greater than ½ inch in height shall be ramped and shall comply with the requirements of 11B-405 Ramps or 11B-406 Curb Ramps as applicable. **§11B-303**
5. Abrupt changes in level exceeding 4 inches in a vertical dimension between walks, sidewalks or other pedestrian ways and adjacent surfaces or features shall be identified by warning curbs at least 6 inches in height above the walk or sidewalk surface or by guards or handrails with a guide rail centered 2 inches minimum and 4 inches maximum above the surface of the walk or sidewalk. These requirements do not apply between a walk or sidewalk and an adjacent street or driveway. **§11B-303.5**

TURNING SPACE

6. Circular turning spaces shall be a space of 60 inches diameter minimum and may include knee and toe clearance complying with 11B-306 Knee and Toe Clearance. **§11B-304.3.1**
7. T-Shaped turning spaces shall be a T-shaped space within a 60 inch square minimum with arms and base 36 inches wide minimum. Each arm of the T shall be clear of obstructions 12 inches minimum in each direction and the base shall be clear of obstructions 24 inches minimum. **§11B-304.3.2, Figure 11B-304.3.2**

As a covered entity under Title II of the Americans with Disabilities Act, the City of Los Angeles does not discriminate on the basis of disability and, upon request, will provide reasonable accommodation to ensure equal access to its programs, services and activities.

KNEE AND TOE CLEARANCE

8. For lavatories and built-in dining and work surfaces required to be accessible, toe clearance shall be provided that is 30 inches in width and 9 inches in height above the finish floor or ground for a depth of 19 inches minimum. **§11B-306.2.1**
9. Toe clearance shall extend 19 inches maximum under lavatories for toilet and bathing facilities and 25 inches maximum under other elements. **§11B-306.2.2**
10. At lavatories in toilet and bathing facilities, knee clearance shall be provided that is 30 inches in width for a depth of 11 inches at 9 inches above the finish floor or ground and for a depth of 8 inches at 27 inches above the finish floor or ground increasing to 29 inches high minimum above the finish floor or ground at the front edge of a counter with a built-in lavatory or at the front edge of a wall-mounted lavatory fixture. **§11B-306.3.3, Figure 11B-306.3(c)**
11. At dining and work surfaces required to be accessible, knee clearance shall be provided that is 30 inches in width at 27 inches above the finish floor or ground for a depth of at least 19 inches. **§11B-306.3**

PROTRUDING OBJECTS

12. Except for handrails, objects with leading edges more than 27 inches and less than 80 inches above the finish floor or ground shall protrude no more than 4 inches horizontally into the circulation path. Handrails may protrude 4½ inches maximum. **§11B-307.2, Figure 11B-307.2**
13. Freestanding objects mounted on posts or pylons shall overhang circulation paths no more than 12 inches when located from 27 to 80 inches above the finish floor or ground. **§11B-307.3, Figure 11B-307.3(a)**
14. Protruding objects shall not reduce the clear width required for accessible routes. **§11B-307.5**
15. Lowest edge of a sign or other obstruction, when mounted between posts or pylons separated with a clear distance greater than 12 inches, shall be less than 27 inches or more than 80 inches above the finish floor or ground. **§11B-307.3, Figure 11B-307.3(b)**
16. Vertical clearance shall be at least 80 inches high on circulation paths except at door closers and door stops, which may be 78 inches minimum above the finish floor or ground. **§11B-307.4**
17. Guardrails or other barriers with a leading edge located 27 inches maximum above the finish floor or ground shall be provided where the vertical clearance on circulation paths is less than 80 inches high. **§11B-307.4, Figure 11B-307.4**
18. Where a guy support is used within either the width of a circulation path or 24 inches maximum outside of a circulation path, a vertical guy brace, sidewalk guy or similar device shall be used to prevent a hazard or an overhead obstruction. **§11B-307.4.1, Figure 11B-307.4.1**

REACH RANGES

19. Electrical controls and switches intended to be used by the occupant of a room or area to control lighting and receptacle outlets, appliances or cooling, heating and ventilating equipment shall be located within allowable reach ranges. Low reach shall be measured to the bottom of the outlet box and high reach shall be measured to the top of the outlet box. **§11B-308.1.1**
20. Electrical receptacle outlets on branch circuits of 30 amperes or less and communication system receptacles shall be located within allowable reach ranges. Low reach shall be measured to the bottom of the outlet box and high reach shall be measured to the top of the outlet box. **§11B-308.1.2.**
21. High forward reach that is unobstructed shall be 48 inches maximum and the low forward reach shall be 15 inches minimum above the finish floor or ground. **§11B-308.2.1, Figure 11B-308.2.1**
22. High forward reach shall be 48 inches maximum where the reach depth is 20 inches or less and 44 inches maximum where the reach depth exceeds 20 inches. High forward reach shall not exceed 25 inches in depth. **§11B-308.2.2, Figure 11B-308.2.2**
23. High side reach shall be 48 inches maximum and the low side reach shall be 15 inches minimum above the finish floor where the side reach is unobstructed or the depth of any obstruction does not exceed 10 inches. **§11B-308.3.1, Figure 11B-308.3.1**

As a covered entity under Title II of the Americans with Disabilities Act, the City of Los Angeles does not discriminate on the basis of disability and, upon request, will provide reasonable accommodation to ensure equal access to its programs, services and activities.

NOT FOR CONSTRUCTION

17.NOV.2021
100% DESIGN SUBMITTAL

belzberg architects
2740 MAIN STREET
SANTA MONICA, CA 90405
310.453.9611
www.belzbergarchitects.com

#	DESCRIPTION	DATE

HOLOCAUST MUSEUM LA EXPANSION

100 THE GROVE DRIVE
LOS ANGELES, CA 90036

ACCESSIBILITY DIAGRAMS

PROJECT NUMBER: 17009

G058

11/18/2021 3:11:06 PM

24. High side reach shall be 46 inches maximum above the finish floor or ground where the high side reach is over an obstruction more than 10 inches but not more than 24 inches in depth. **§11B-308.3.2, Figure 11B-308.3.2**
25. Obstructions for high side reach shall not exceed 34 inches in height and 24 inches in depth. **§11B-308.3.2, Figure 11B-308.3.2**
26. Obstructed high side reach for the top of washing machines and clothes dryers shall be permitted to be 36 inches maximum above the finish floor. **§11B-308.3.2**
27. Obstructed high side reach for the operable parts of fuel dispensers shall be permitted to be 54 inches maximum measured from the surface of the vehicular way where fuel dispensers are installed on existing curbs. **§11B-308.3.2**

OPERABLE PARTS

28. Operable parts shall be operable with one hand and shall not require tight grasping, pinching, or twisting of the wrist. Force required to activate operable parts shall be 5 pounds maximum. **§11B-309.4**

C. ACCESSIBLE ROUTES

DETECTABLE WARNINGS AND DETECTABLE DIRECTIONAL TEXTURE

1. Detectable warning surfaces shall be yellow and approximate FS 33538 of Federal Standard 595C. **§11B-705.1.1.3.1**
2. Detectable warning surfaces shall provide a 70 percent minimum visual contrast with adjacent walking surfaces. Contrast in percent shall be determined by:

   Contrast percent = [(B1-B2)/B1] x 100 where

   B1 = light reflectance value (LRV) of the lighter area and

   B2 = light reflectance value (LRV) of the darker area

   §11B-705.1.1.3.2 (See exception)

DOORS, DOORWAYS, AND GATES

3. Doors, doorways, and gates providing user passage shall be provided in accordance with 11B-206.5 Doors, Doorways, and Gates. **§11B-206.5**
4. Doors, doorways and gates that are part of an accessible route shall comply with 11B-404 Doors, Doorways, and Gates. **§11B-404.1**
5. Door openings shall provide a clear width of 32 inches minimum. Clear openings of doorways with swinging doors shall be measured between the face of the door and the stop, with the door open 90 degrees. Openings more than 24 inches deep shall provide a clear opening of 36 inches minimum. There shall be no projections into the required clear opening width lower than 34 inches above the finish floor or ground. Projections into the clear opening width between 34 inches and 80 inches above the finish floor or ground shall not exceed 4 inches. **§11B-404.2.3**
6. Swinging doors and gates shall have maneuvering clearances complying with Table 11B-404.2.4.1. **§11B-404.2.4.1**
7. Doorways less than 36 inches wide without doors or gates, sliding doors, or folding doors shall have maneuvering clearances complying with Table 11B-404.2.4.2. **§11B-404.2.4.2**
8. Maneuvering clearances for forward approach shall be provided when any obstruction within 18 inches of the latch side an interior doorway, or within 24 inches of the latch side of an exterior doorway, projects more than 8 inches beyond the face of the door, measured perpendicular to the face of the door or gate. **§11B-404.2.4.3**
9. Thresholds, if provided at doorways, shall be ½ inch high maximum. Raised thresholds and changes in level at doorways shall comply with 11B-302 Floor or Ground Surfaces and 11B-303 Changes in Level. **§11B-404.2.5**
10. Handles, pulls, latches, locks, and other operable parts on doors and gates shall comply with 11B-309.4 Operation. Operable parts of such hardware shall be 34 inches minimum and 44 inches maximum above

As a covered entity under Title II of the Americans with Disabilities Act, the City of Los Angeles does not discriminate on the basis of disability and, upon request, will provide reasonable accommodation to ensure equal access to its programs, services and activities.

the finish floor or ground. Where sliding doors are in the fully open position, operating hardware shall be exposed and usable from both sides. **§11B-404.2.7**

11. The force for pushing or pulling open a door or gate other than fire doors shall be as follows: **§11B-404.2.9**
    a. Interior hinged doors and gates: 5 pounds maximum.
    b. Sliding or folding doors: 5 pounds maximum.
    c. Required fire doors: the minimum opening force allowable by the appropriate administrative authority, not to exceed 15 pounds.
    d. Exterior hinged doors: 5 pounds maximum.
12. Swinging door and gate surfaces within 10 inches of the finish floor or ground measured vertically shall have a smooth surface on the push side extending the full width of the door or gate. Parts creating horizontal or vertical joints in these surfaces shall be within 1/16 inch of the same plane as the other and be free of sharp or abrasive edges. Cavities created by added kick plates shall be capped. **§11B-404.2.10**

RAMPS

13. Ramp runs shall have a running slope not steeper than 1:12 (8.33%). **§11B-405.2**
14. Cross slope of ramp runs shall not be steeper than 1:48 (2.083%). **§11B-405.3**
15. Floor or ground surfaces of ramp runs shall comply with 11B-302 Floor or Ground Surfaces. Changes in level other than the running slope and cross slope are not permitted on ramp runs. **§11B-405.4**
16. The clear width of a ramp run shall be 48 inches minimum. **§11B-405.5**
17. The rise for any ramp run shall be 30 inches maximum. **§11B-405.6**
18. Ramps shall have landings at the top and the bottom of each ramp run. **§11B-405.7**
19. Landings shall comply with 11B-302 Floor or Ground Surfaces. Changes in level are not permitted. **§11B-405.7.1**
20. The landing clear width shall be at least as wide as the widest ramp run leading to the landing. **§11B-405.7.2**
21. Top landings shall be 60 inches wide minimum. **§11B-405.7.2.1**
22. The landing clear length shall be 60 inches long minimum. **§11B-405.7.3**
23. Bottom landings shall extend 72 inches minimum in the direction of ramp run. **§11B-405.7.3.1**
24. Ramps that change direction between runs at landings shall have a clear landing 60 inches minimum by 72 inches minimum in the direction of downward travel from the upper ramp run. **§11B-405.7.4**
25. Where doorways are located adjacent to a ramp landing, maneuvering clearances required by 11B-404.2.4 and 11B-404.3.2 shall be permitted to overlap the required landing area. Doors, when fully open, shall not reduce the required ramp landing width by more than 3 inches. Doors, in any position, shall not reduce the minimum dimension of the ramp landing to less than 42 inches. **§11B-405.7.5**
26. Ramp runs shall have compliant handrails per 11B-505 Handrails. **§11B-405.8**
27. Edge protection complying with 11B-405.9.2 Curb or Barrier shall be provided on each side of ramp runs and at each side of ramp landings. **§11B-405.9 (See exceptions)**
28. A curb or barrier shall be provided that prevents the passage of a 4 inch diameter sphere, where any portion of the sphere is within 4 inches of the finish floor or ground surface. To prevent wheel entrapment, the curb or barrier shall provide a continuous and uninterrupted barrier along the length of the ramp. **§11B-405.9.2**
29. Landings subject to wet conditions shall be designed to prevent the accumulation of water. **§11B-405.10**

HANDRAILS

30. Handrails shall be provided on both sides of stairs and ramps. **§11B-505.2**
31. Handrails shall be continuous within the full length of each stair flight or ramp run. Inside handrails on switchback or dogleg stairs and ramps shall be continuous between flights or runs. **§11B-505.3**
32. Top of gripping surfaces of handrails shall be 34 inches minimum and 38 inches maximum vertically above walking surfaces, stair nosings, and ramp surfaces. Handrails shall be at a consistent height above walking surfaces, stair nosings, and ramp surfaces. **§11B-505.4**

As a covered entity under Title II of the Americans with Disabilities Act, the City of Los Angeles does not discriminate on the basis of disability and, upon request, will provide reasonable accommodation to ensure equal access to its programs, services and activities.

33. Clearance between handrail gripping surfaces and adjacent surfaces shall be 1½ inches minimum. Handrails may be located in a recess if the recess is 3 inches maximum deep and 18 inches minimum clear above the top of the handrail. **§11B-505.5**
34. Handrail gripping surfaces shall be continuous along their length and shall not be obstructed along their tops or sides. The bottoms of handrail gripping surfaces shall not be obstructed for more than 20 percent of their length. Where provided, horizontal projections shall occur 1½ inches minimum below the bottom of the handrail-gripping surface. **§11B-505.6**
35. Handrail gripping surfaces with a circular cross section shall have an outside diameter of 1¼ inches minimum and 2 inches maximum. **§11B-505.7.1**
36. Handrail gripping surfaces with a non-circular cross section shall have a perimeter dimension of 4 inches minimum and 6¼ inches maximum, and a cross-section dimension of 2¼ inches maximum. **§11B-505.7.2**
37. Handrail gripping surfaces shall extend beyond and in the same direction of stair flights and ramp runs in accordance with Section 11B-505.10 Handrail Extensions. **§11B-505.10**
38. Ramp handrails shall extend horizontally above the landing for 12 inches minimum beyond the top and bottom of ramp runs. Extensions shall return to a wall, guard, or the landing surface, or shall be continuous to the handrail of an adjacent ramp run. **§11B-505.10.1**
39. At the top of a stair flight, handrails shall extend horizontally above the landing for 12 inches minimum beginning directly above the first riser nosing. Extensions shall return to a wall, guard, or the landing surface, or shall be continuous to the handrail of an adjacent stair flight. **§11B-505.10.2**
40. At the bottom of a stair flight, handrails shall extend at the slope of the stair flight for a horizontal distance equal to one tread depth beyond the last riser nosing. The horizontal extension of a handrail shall be 12 inches long minimum and a height equal to that of the sloping portion of the handrail as measured above the stair nosings. Extension shall return to a wall, guard, or the landing surface, or shall be continuous to the handrail of an adjacent stair flight. **§11B-505.10.3**

STAIRWAYS

41. A stair is defined as a change in elevation, consisting of one or more risers. **§11B-202**
42. All steps on a flight of stairs shall have uniform riser heights and uniform tread depths. Risers shall be 4 inches high minimum and 7 inches high maximum. Treads shall be 11 inches deep minimum. Curved stairways with winder treads are permitted at stairs which are not part of a required means of egress. (See exception) **§11B-504.2**
43. Open risers are not permitted. **§11B-504.3 (See exceptions)**
44. Interior stairs shall have the upper approach and lower tread marked by a stripe providing clear visual contrast. Exterior stairs shall have the upper approach and all treads marked by a stripe providing clear visual contrast. The stripe shall be a minimum of 2 inches wide to a maximum of 4 inches wide placed parallel to, and not more than 1 inch from, the nose of the step or upper approach. The stripe shall extend the full width of the step or upper approach and shall be of material that is at least as slip resistant as the other treads of the stair. A painted stripe shall be acceptable. Grooves shall not be used to satisfy this requirement. **§11B-504.4.1**
45. The radius of curvature at the leading edge of the tread shall be ½ inch maximum. Nosings that project beyond risers shall have the underside of the leading edge curved or beveled. Risers shall be permitted to slope under the tread at an angle of 30 degrees maximum from vertical. The permitted projection of the nosing shall extend 1¼ inches maximum over the tread below. **§11B-504.5 (See exception for existing buildings)**
46. Stairs shall have handrails complying with Section 11B-505 Handrails. **§11B-504.6**
47. Stair treads and landings subject to wet conditions shall be designed to prevent the accumulation of water. **§11B-504.7**
48. Floor identification signs required by Chapter 10, Section 1022.9 complying with Sections 11B-703.1 Signs General, 11B-703.2 Raised Characters, 11B-703.3 Braille and 11B-703.5 Visual Characters shall be located at the landing of each floor level, placed adjacent to the door on the latch side, in all enclosed stairways in buildings two or more stories in height to identify the floor level. At the exit discharge level, the sign shall

As a covered entity under Title II of the Americans with Disabilities Act, the City of Los Angeles does not discriminate on the basis of disability and, upon request, will provide reasonable accommodation to ensure equal access to its programs, services and activities.

include a raised five pointed star located to the left of the identifying floor level. The outside diameter of the star shall be the same as the height of the raised characters. **§11B-504.8**

CURB RAMPS, BLENDED TRANSITIONS AND ISLANDS

49. Perpendicular ramp runs shall have a running slope not steeper than 1:12 (8.33%). **§11B-406.2.1**
50. For perpendicular ramps, where provided, curb ramp flares shall not be steeper than 1:10. **§11B-406.2, Figure 11B-406.2.2**
51. The running slope of the curb ramp segments shall be in-line with the direction of sidewalk travel. Ramp runs shall have a running slope not steeper than 1:12 (8.33%). **§11B-406.3.1, Figure 11B-406.3.2**
52. A turning space 48 inches minimum by 48 inches minimum shall be provided at the bottom of the curb ramp. The slope of the turning space in all directions shall be 1:48 maximum (2.083%). **§11B-406.3.2**
53. Blended transition ramps hall have a running slope not steeper than 1:20 (5%). **§11B-406.4.1**
54. Curb ramps and the flared sides of curb ramps shall be located so that they do not project into vehicular traffic lanes, parking spaces, or parking access aisles. Curb ramps at marked crossings shall be wholly contained within the markings, excluding any flared sides. **§11B-406.5.1**
55. The clear width of curb ramp runs (excluding any flared sides), blended transitions, and turning spaces shall be 48 inches minimum. **§11B-406.5.2**
56. Landings shall be provided at the tops of curb ramps and blended transitions (parallel curb ramps shall not be required to comply). The landing clear length shall be 48 inches minimum. The landing clear width shall be at least as wide as the curb ramp, excluding any flared sides, or the blended transition leading to the landing. The slope of the landing in all directions shall be 1:48 (2.083%) maximum. **§11B-406.5.3**
57. Grade breaks at the top and bottom of curb ramp runs shall be perpendicular to the direction of the ramp run. Grade breaks shall not be permitted on the surface of ramp runs and turning spaces. Surface slopes that meet at grade breaks shall be flush. **§11B-406.5.6**
58. The cross slope of curb ramps and blended transitions shall be 1:48 (2.083%) maximum. **§11B-406.5.7**
59. Counter slopes of adjoining gutters and road surfaces immediately adjacent to and within 24 inches of the curb ramp shall not be steeper than 1:20 (5%). The adjacent surfaces at transitions at curb ramps to walks, gutters, and streets shall be at the same level. **§11B-406.5.8**
60. The bottom of diagonal curb ramps shall have a clear space 48 inches minimum outside active traffic lanes of the roadway. Diagonal curb ramps provided at marked crossings shall provide the 48 inches minimum clear space within the markings. **§11B-406.5.9**
61. Curb ramps and blended transitions shall have detectable warnings complying with 11B-705 Detectable Warnings. **§11B-406.5.12**
62. Raised islands in crossings shall be cut through level with the street or have curb ramps at both sides. The clear width of the accessible route at islands shall be 60 inches wide minimum. Where curb ramps are provided, they shall comply with 11B-406 Curb Ramps, Blended Transitions and Islands. Landings complying with 11B-406.5.3 Landings and the accessible route shall be permitted to overlap. Islands shall have detectable warnings complying with 11B-705 Detectable Warnings and Detectable Directional Texture. **§11B-406.6, Figure 11B-406.6**

D. GENERAL SITE AND BUILDING ELEMENTS

1. Where parking spaces are provided, accessible parking spaces shall be provided in number and kind required per Section 11B-208 Parking Spaces. **§11B-208.1**
2. Where passenger loading zones, drop-off zones, and/or bus stops are provided, accessible passenger loading zones, drop-off zones, and/or bus stops are required.
3. Where Electric vehicle charging stations (EVCS) are provided, they shall comply with Section 11B-812 as required by Section 11B-228.3.
4. EVCS complying with Section 11B-812 that serve a particular building or facility shall be located on an accessible route to an entrance complying with Section 11B-206.4. Where EVCS do not serve a particular building or facility, EVCS complying with Section 11B-812 shall be located on an accessible route to an accessible pedestrian entrance of the EV charging facility.

As a covered entity under Title II of the Americans with Disabilities Act, the City of Los Angeles does not discriminate on the basis of disability and, upon request, will provide reasonable accommodation to ensure equal access to its programs, services and activities.

E. PLUMBING FIXTURES AND FACILITIES

DRINKING FOUNTAINS

1. Drinking fountains shall comply with Sections 11B-307 Protruding Objects and 11B-602 General Requirements. **§11B-602.1**
2. Units shall have a clear floor or ground space complying with Section 11B-305 Clear Floor or Ground Space positioned for a forward approach and centered on the unit. Knee and toe clearance complying with Section 11B-306 Knee and Toe Clearance shall be provided. **§11B-602.2**
3. Spout outlets shall be 36 inches maximum above the finish floor or ground. **§11B-602.4**
4. The spout shall be located 15 inches minimum from the vertical support and 5 inches maximum from the front edge of the unit, including bumpers. **§11B-602.5**
5. The spout shall provide a flow of water 4 inches high minimum and shall be located 5 inches maximum from the front of the unit. The angle of the water stream shall be measured horizontally relative to the front face of the unit. Where spouts are located less than 3 inches from the front of the unit, the angle of the water stream shall be 30 degrees maximum. Where spouts are located between 3 inches and 5 inches maximum from the front of the unit, the angle of the water stream shall be 15 degrees maximum. **§11B-602.6**
6. Spout outlets of drinking fountains for standing persons shall be 38 inches minimum and 43 inches maximum above the finish floor or ground. **§11B-602.7**
7. Wall and post-mounted cantilevered drinking fountains shall be 18 inches minimum and 19 inches maximum in depth. **§11B-602.8**
8. All drinking fountains shall either be located completely within alcoves, positioned completely between wing walls, or otherwise positioned so as not to encroach into pedestrian ways. The protected area within such a drinking fountain is located shall be 32 inches wide minimum and 18 inches deep minimum, and shall comply with Section 11B-305.7 Maneuvering Clearance. When used, wing walls or barriers shall protect horizontally at least as far as the drinking fountain and to within 6 inches vertically from the floor or ground surface. **§11B-602.9**

TOILET AND BATHING ROOM CLEARANCES

9. Doors to unisex toilet rooms and unisex bathing rooms shall have privacy latches. **§11B-213.2.1**
10. Mirrors located above the lavatories or countertops shall be installed within the bottom edge of the reflecting surface 40 inches maximum above the finish floor or ground. Mirrors not located above the lavatories or countertops shall be installed with the bottom edge of the reflecting surface 35 inches maximum above the finish floor or ground. **§11B-603.3**
11. Coat hooks shall be located within one of the reach ranges specified in Section 11B-308. Shelves shall be located 40 inches minimum and 48 inches maximum above the finish floor. Medicine cabinets shall be located with a usable shelf no higher than 44 inches maximum above the finish floor. **§11B-603.4**
12. Where towel or sanitary napkin dispensers, waste receptacles, or other accessories are provided in toilet facilities, at least one of each type shall be located on an accessible route. All operable parts, including coin slots, shall be 40 inches maximum above the finish floor. Baby changing stations are not required to comply with Section 11B-603.5 (See exception) **§11B-603.5**

WATER CLOSETS AND TOILET COMPARTMENTS

13. Flush controls shall be hand operated or automatic. Hand operated flush controls shall comply with Section 11B-309.4 Operation except they shall be located 44 inches maximum above the floor. Flush controls shall be located on the open side of the water closet except in ambulatory accessible compartments complying with Section 11B-604.8.2 Ambulatory Accessible Compartments. **§11B-604.6**
14. Toilet paper dispensers shall comply with Section 11B-309.4 Operation and shall be 7 inches minimum and 9 inches maximum in front of the water closet measured to the centerline of the dispenser. The outlet of the dispenser shall be below the grab bar, 19 inches minimum above the finish floor and shall not be located behind the grab bars. Dispensers shall not be of a type that control delivery or that does not allow continuous paper flow. **§11B-604.7**

As a covered entity under Title II of the Americans with Disabilities Act, the City of Los Angeles does not discriminate on the basis of disability and, upon request, will provide reasonable accommodation to ensure equal access to its programs, services and activities.

15. Sanitary napkin disposal units, if provided, shall comply with Section 11B-309.4 and shall be wall mounted and located on the sidewall between the rear wall of the toilet and the toilet paper dispenser, adjacent to the toilet paper dispenser. The disposal unit shall be located below the grab bar with the opening of the disposal unit 19 inches minimum (483 mm) above the finish floor. **§11B-604.7.2**
16. Urinals shall be the stall-type or the wall-hung type with the rim 17 inches maximum above the finish floor or ground. Urinals shall be 13½ inches deep minimum measured from the outer face of the urinal rim to the back of the fixture. **§11B-605.2**
17. Flush controls shall be hand operated or automatic. Hand operated flush controls shall comply with Section 11B-309 Operable Parts except that the flush control shall be mounted at a maximum height of 44 inches above the finish floor. **§11B-605.4**
18. For lavatories and sinks, a clear floor space complying with Section 11B-305 Clear Floor or Ground Surfaces, positioned for a forward approach, and knee and toe clearance complying with Section 11B-306 Knee and Toe Clearance shall be provided. **§11B-606.2**
19. Lavatories and sinks shall be installed with the front of the higher of the rim or counter surface 34 inches maximum above the finish floor or ground. **§11B-606.3**

SIGNS RELATED TO TOILETS AND BATHING FACILITIES

20. Entrances leading to toilet rooms and bathing rooms complying with 11B-603 Toilet and Bathing Rooms shall be identified by a geometric symbol complying with 11B-703.7.2.6 Toilet and Bathing Room Geometric Symbols. Where existing toilet rooms or bathing rooms do not comply with 11B-603 Toilet and Bathing Rooms, directional signs indicating the location of the nearest compliant toilet room or bathing room within the facility shall be provided. Signs shall comply with 11B-703.5 Visual Characters and shall include the International Symbol of Accessibility complying with 11B-703.7.2.1 ISA. Where existing toilet rooms or bathing rooms do not comply with 11B-603 Toilet and Bathing Rooms, the toilet rooms or bathing rooms complying with 11B-603 Toilet and Bathing Rooms shall be identified by the International Symbol of Accessibility complying with 11B-703.7.2.1 ISA. Where clustered single user toilet rooms or bathing facilities are permitted to use exceptions to 11B-213.2 Toilet and Bathing Rooms, toilet rooms or bathing facilities complying with 11B-603 Toilet and Bathing Rooms shall be identified by the International Symbol of Accessibility complying with 11B-703.7.2.1 ISA unless all toilet rooms and bathing facilities comply with 11B-603 Toilet and Bathing Rooms. Existing buildings that have been remodeled to provide specific toilet rooms or bathing rooms for public use that comply with these building standards shall have the location of and the directions to these rooms posted in or near the building lobby or entrance on a sign complying with 11B-703.5 Visual Characters, including the International Symbol of Accessibility complying with 11B-703.7.2.1 ISA. **§11B-216.8**
21. Pictograms shall comply with the following:
    a. Pictograms shall have a field height of 6 inches minimum. Characters and Braille shall not be located in the pictogram field. **§11B-703.6.1**
    b. Pictograms and their field shall have a non-glare finish. Pictograms shall contrast with their field with either a light pictogram on a dark field or a dark pictogram on a light field. **§11B-703.6.2**
    c. Pictograms shall have text descriptors located directly below the pictogram field. Text descriptors shall comply with 11B-703.2 Raised Characters, 11B-703.3 Braille and 11B-703.4 Installation Height and Location. **§11B-703.6.3**
    d. The installation height and location of Pictogram signs shall be per **§11B-703.4.1.**
22. Symbols shall comply with the following:
    a. Doorways leading to toilet rooms and bathing rooms shall be identified by a geometric symbol complying with 11B-703.7.2.6 Toilet and Bathing Facilities Geometric Symbols. The symbol shall be mounted at 58 inches minimum and 60 inches maximum above the finish floor or ground surface measured from the centerline of the symbol. Where a door is provided, the symbol shall be mounted within 1 inch of the vertical centerline of the door. **§11B-703.7.2.6 (See exception)**
    b. A triangle symbol shall be located at entrances to men's toilet and bathing facilities and it shall be identified by an equilateral triangle, ¼ inch thick with edges 12 inches long and a vertex pointing upward. The triangle symbol shall contrast with the door, either light on a dark background or dark on a light background. **§11B-703.7.2.6.1**

As a covered entity under Title II of the Americans with Disabilities Act, the City of Los Angeles does not discriminate on the basis of disability and, upon request, will provide reasonable accommodation to ensure equal access to its programs, services and activities.

    c. A circle symbol shall be located at entrances to women's toilet and bathing facilities and it shall be identified by a circle, ¼ inch thick and 12 inches in diameter. The circle symbol shall contrast with the door, either light on a dark background or dark on a light background. **§11B-703.7.2.6.2**
    d. A combined circle and triangle symbol shall be located at entrances to unisex toilet and bathing facilities and it shall be shall be identified by a circle, ¼ inch thick and 12 inches in diameter with a ¼ inch thick triangle with a vertex pointing upward superimposed on the circle and within the 12-inch diameter. The triangle symbol shall contrast with the circle symbol, either light on a dark background or dark on a light background. The circle symbol shall contrast with the door, either light on a dark background or dark on a light background. **§11B-703.7.2.6.3**

WASHING MACHINE AND CLOTHES DRYERS

23. Washing machines and clothes dryer's operable parts must comply with Section 11B-309 Operable Parts. **§11B-611.3**
24. Top loading machines shall have the door to the laundry compartment located 36 inches maximum above the finish floor. Front loading machines shall have the bottom of the opening to the laundry compartment located 15 inches minim and 36 inches maximum above the finish floor. **§11B-611.4**

F. COMMUNICATION ELEMENTS AND FEATURES

FIRE ALARM SYSTEMS

1. Where fire alarm systems and carbon monoxide alarm systems provide audible alarm coverage, alarms shall comply with 11B-215 Fire Alarm Systems. **§11B-215.1 (See exception)**
2. Alarms in public use areas and common use areas shall comply with 702 Chapter 9, Section 907.5.2.3.1. **§11B-215.2**
3. Where employee work areas have audible alarm coverage, the wiring system shall be designed so that visible alarms complying with 702 Chapter 9, Section 907.5.2.3.2 can be integrated into the alarm system. **§11B-215.3**
4. Fire alarm systems shall have permanently installed audible and visible alarms complying with NFPA 72 (1999 or 2002 edition) (incorporated by reference, see "Referenced Standards" in Chapter 1), except that the maximum allowable sound level of audible notification appliances complying with section 4-3.2.1 of NFPA 72 (1999 edition) shall have a sound level no more than 110 dB at the minimum hearing distance from the audible appliance. In addition, alarms in guest rooms required to provide communication features shall comply with sections 4-3 and 4-4 of NFPA 72 (1999 edition) or sections 7.4 and 7.5 of NFPA 72 (2002 edition), and Chapter 9, Sections 907.5.2.1 and 907.5.2.3. **§11B-702.1**

ASSISTIVE LISTENING SYSTEMS

5. Assistive listening systems shall be provided in assembly areas, including conference and meeting rooms, used for the purpose of entertainment, educational or civic gatherings, or similar purposes. **§202, §11B-219.2**

   Note: Assembly areas include, but are not limited to, classrooms, lecture halls, courtrooms, public meeting rooms, public hearing rooms, legislative chambers, motion picture houses, auditoria, theaters, playhouses, dinner theaters, concert halls, centers for the performing arts, amphitheaters, arenas, stadiums, grandstands, or convention centers. **§202, §11B-219.2**
6. Assistive listening system shall provide an amplification system utilizing transmitters, receivers, and coupling devices to bypass the acoustical space between a sound source and a listener by means of induction loop, radio frequency, infrared, or direct-wired equipment. **§202**
7. Where a building contains more than one assembly area under one management, the total number of required receivers may be calculated using the total number of seats in the assembly areas provided that all receivers are useable with all systems. **§11B-219.3 (See exception)**
8. Twenty-five percent minimum of receivers provided for assistive listening systems, but no fewer than two, shall be hearing-aid compatible except when all seats in an assembly area are served by means of an induction loop. **§11B-219.3**

As a covered entity under Title II of the Americans with Disabilities Act, the City of Los Angeles does not discriminate on the basis of disability and, upon request, will provide reasonable accommodation to ensure equal access to its programs, services and activities.

9. When assistive-listening systems are limited to specific areas or seats, such areas or seats shall be within a 50-foot viewing distance of the stage or playing area and shall have a complete view of the stage or playing area. **§11B-219.4**
10. Permanently installed assistive-listening systems are required in areas if (1) they have fixed seating and (2a) they accommodate at least 50 persons or (2b) they have audio-amplification systems, except those used exclusively for paging and/or background music. **§11B-219.2, §11B-219.5**
11. Portable assistive-listening systems may serve more than one conference or meeting rooms if an adequate number of electrical outlets or other supplementary wiring is provided and permanently installed systems are not required. **§11B-219.5**
12. Receivers required for use with an assistive listening system shall include a 1/8 inch standard mono jack. **§11B-706.2**
13. Receivers required to be hearing aid compatible shall interface with telecoils in hearing aids through the provision of neck loops. **§11B-706.3**
14. Assistive listening systems shall be capable of providing a sound pressure level from 110 – 118 dB with a dynamic range on the volume control of 50 dB. **§11B-706.4**
15. Signal-to-noise ratio for internally generated noise in assistive listening systems shall be 18 dB minimum. **§11B-706.5**
16. Peak clipping shall not exceed 18 dB of clipping relative to the peaks of speech. **§11B-706.6**

TWO-WAY COMMUNICATION SYSTEMS

17. Two-way communication systems that are provided to gain admittance to a building or facility or to restricted areas within a building or facility shall provide both audible and visual signals. Handset cords, if provided, shall be 29 inches long minimum. **§11B-230.1, §11B-708**
18. Common use or public use system interface of communications systems between a residential dwelling unit and a site, building, or floor entrance shall include the capability of supporting voice and TTY communication with the residential dwelling unit interface. **§11B-708.4.1**
19. Residential dwelling unit system interface of communications systems between a residential dwelling unit and a site, building, or floor entrance shall include a telephone jack capable of supporting voice and TTY communication with the common use or public use system interface. **§11B-708.4.2**

TELEPHONES

20. Where coin-operated public pay telephones, coin less public pay telephones, public closed-circuit telephones, public courtesy phones, or other types of public telephones are provided, public telephones shall be provided in accordance with 11B-217 Telephones for each type of public telephone provided. For purposes of this section, a bank of telephones shall be considered to be two or more adjacent telephones. **§11B-217.1**
21. Except drive-up only public telephones, where public telephones are provided, wheelchair accessible telephones complying with 11B-704.2 shall be provided in accordance with Table 11B-217.2. **§11B-217.2**
22. All public telephones shall have volume controls complying with 11B-704.3. **§11B-217.3**
23. TTYs complying with 11B-704.4 shall be provided in accordance with 11B-217.4.
24. Where a bank of telephones in the interior of a building consists of three or more public pay telephones, at least one public pay telephone at the bank shall be provided with a shelf and an electrical outlet in accordance with 11B-704.5. **§11B-217.5 (See exception)**

As a covered entity under Title II of the Americans with Disabilities Act, the City of Los Angeles does not discriminate on the basis of disability and, upon request, will provide reasonable accommodation to ensure equal access to its programs, services and activities.

NOT FOR CONSTRUCTION

17.NOV.2021
100% DESIGN SUBMITTAL

ba
belzberg architects
2740 MAIN STREET
SANTA MONICA, CA 90405
310.453.9611
www.belzbergarchitects.com

#	DESCRIPTION	DATE

HOLOCAUST MUSEUM LA EXPANSION

100 THE GROVE DRIVE
LOS ANGELES, CA 90036

ACCESSIBILITY DIAGRAMS

PROJECT NUMBER: 17009

G059

11/8/2021 3:11:07 PM

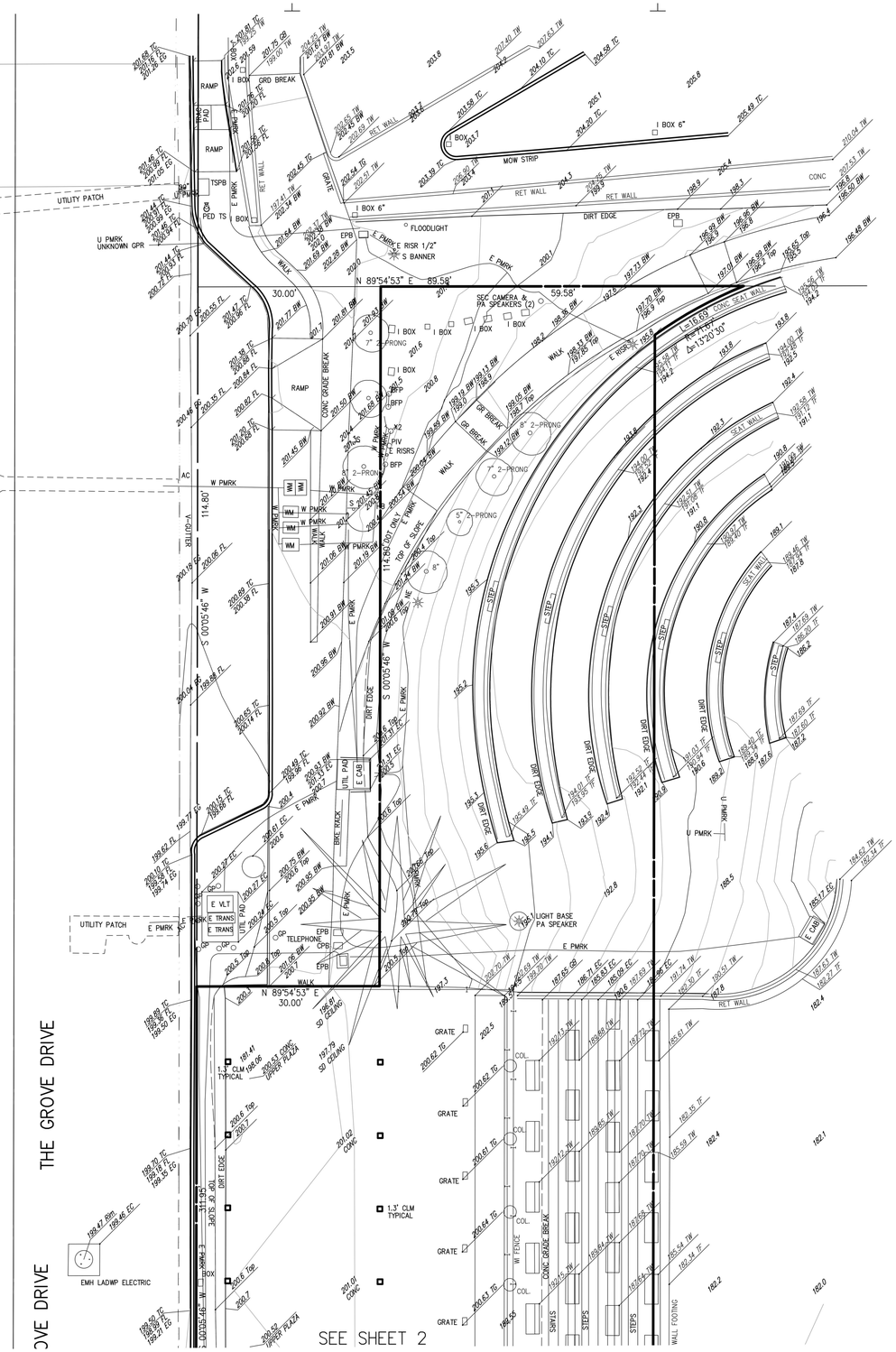
UTILITY PATCH
RAMP
GRD BREAK
TSPB
E PMRK
PED TS
I BOX
I BOX 6"
MOW STRIP
RET WALL
GR BRK
CONC
DIRT EDGE
EPB
FLOODLIGHT
E PMRK
E RISR 1/2"
S BANNER
U PMRK
UNKNOWN GPR
N 89°54'53" E 89.58'
30.00'
59.58'
SEC CAMERA &
PA SPEAKERS (2)
E PMRK
CONC GRADE BREAK
RAMP
W PMRK
114.80'
W PMRK
W PMRK
W PMRK

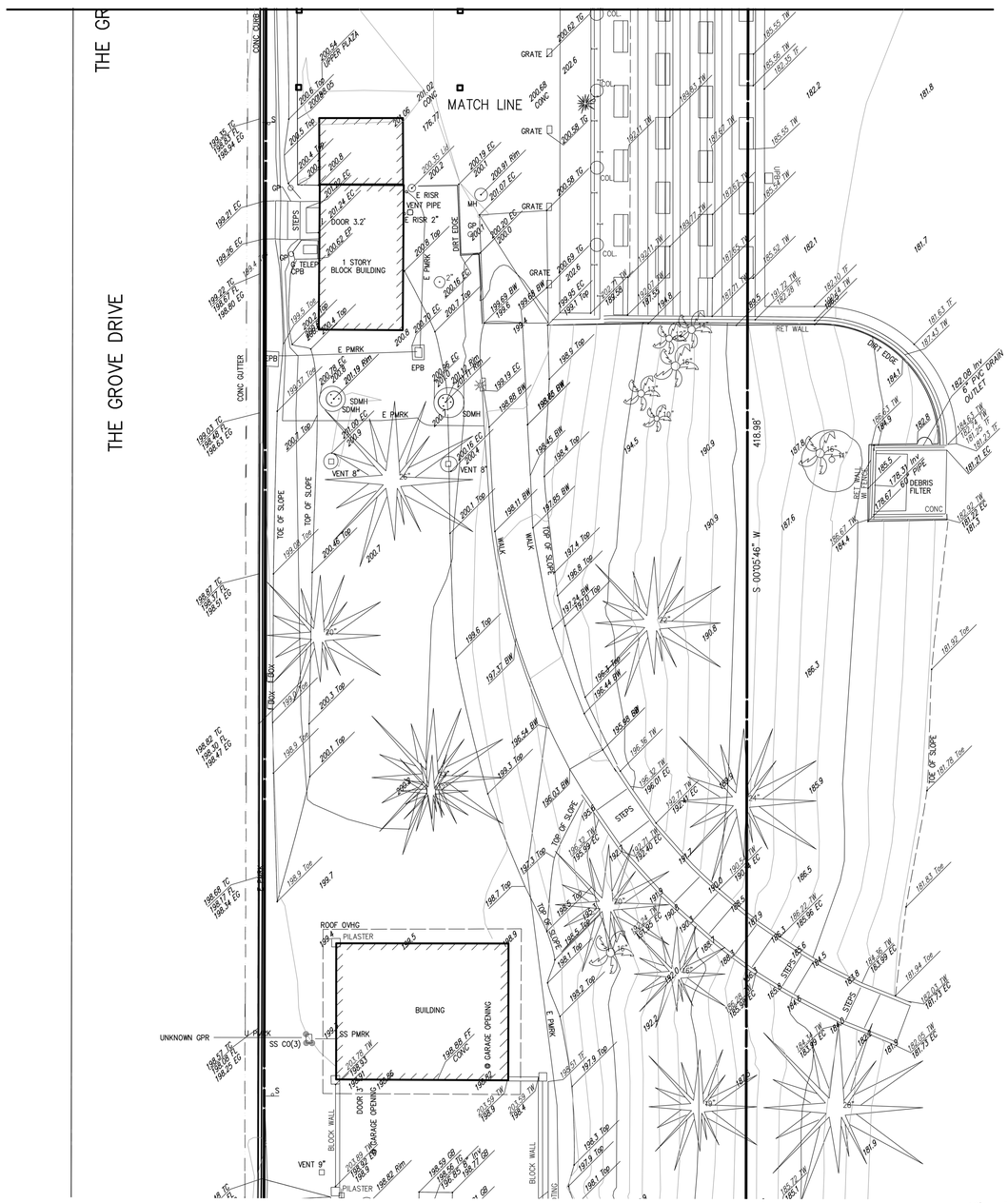

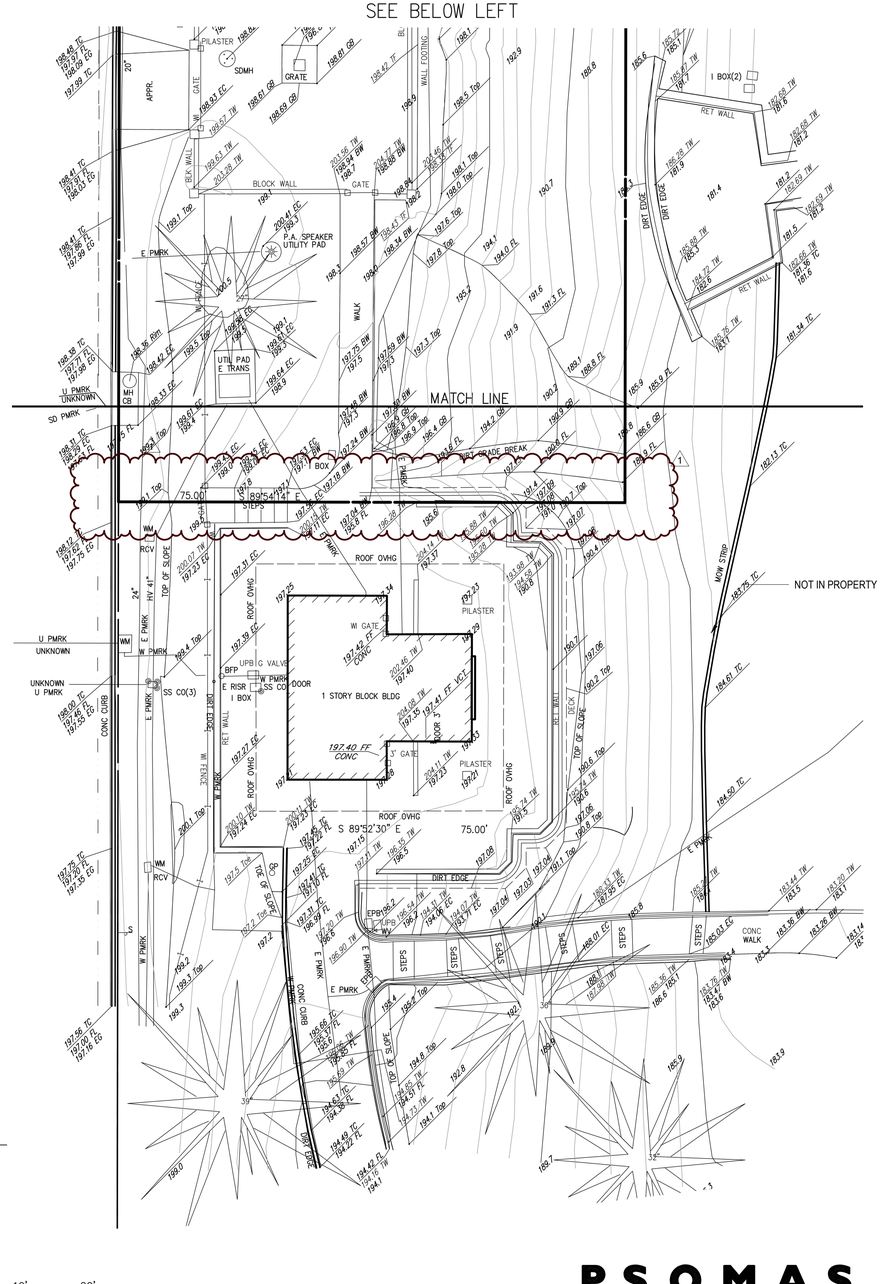

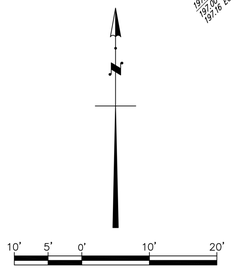

PSOMAS
555 South Flower Street, Suite 4300
Los Angeles, CA 90071
(213) 223-1400 (213) 223-1444 fax
www.psomas.com

Nov. 30, 2021 - 08:43:12 DWG Name: W:\HOL010100\SURVEY\DESIGN\PLT\TB-G061_2021-0901.dwg Updated By: dhoward

NOT FOR CONSTRUCTION

10.DEC.2021
100% DESIGN SUBMITTAL

ba
belzberg architects
2740 MAIN STREET
SANTA MONICA, CA 90405
310.453.9611
www.belzbergarchitects.com

#	DESCRIPTION	DATE
1	P.C. VERIF 1	12/10/2021

HOLOCAUST MUSEUM LA EXPANSION

100 THE GROVE DRIVE
LOS ANGELES, CA 90036

ARCHITECTURAL SURVEY

PROJECT NUMBER: 17009

G061

12/8/2021 10:32:34 AM

NOTICE TO CONTRACTORS:

1. ALL WORK PERFORMED IN THE CONTRACT SHALL CONFORM TO PROJECT SPECIFICATIONS.
2. UNLESS OTHERWISE STATED, THE CONTRACTOR SHALL PERFORM ALL THE WORK SPECIFIED ON THE DRAWINGS AND WITHIN THE VARIOUS NOTES SHOWN HEREON.
3. ALL OFF SITE WORK SHALL COMPLY WITH THE REQUIREMENTS OF THE LOCAL GOVERNING AGENCY. CONTRACTOR SHALL SECURE AND PAY FOR ALL REQUIRED CONSTRUCTION PERMITS.
6. THE EXISTING CONDITIONS SHOWN ON THE PLANS WERE OBTAINED FROM AS-BUILT DRAWINGS AND FIELD SURVEY. IT SHALL BE THE RESPONSIBILITY OF THE CONTRACTOR TO VISIT THE JOB SITE AND VERIFY THE EXACT EXISTING CONDITIONS BEFORE SUBMITTING HIS BID.
7. PRIOR TO COMMENCEMENT OF CONSTRUCTION, CONTRACTOR SHALL VERIFY ALL JOIN CONDITIONS FOR GRADING AND DRAINAGE WORK. IF CONDITIONS DIFFER FROM THOSE SHOWN ON THE PLANS, THE CONTRACTOR SHALL NOTIFY THE PROJECT ENGINEER AND SHALL NOT BEGIN CONSTRUCTION UNTIL THE CHANGED CONDITIONS HAVE BEEN EVALUATED.
8. THE EXISTENCE, LOCATION AND CHARACTERISTICS OF UNDERGROUND UTILITY INFORMATION SHOWN ON THESE PLANS HAS BEEN OBTAINED FROM DATA COLLECTED BY THE OWNER FOR EXISTING ONSITE UTILITIES AND FOR OFFSITE UTILITIES.
9. THE CONTRACTOR SHALL ASSUME SOLE AND COMPLETE RESPONSIBILITY FOR JOB SITE CONDITIONS, INCLUDING SAFETY OF ALL PERSONS AND PROPERTY, DURING THE COURSE OF CONSTRUCTION OF THIS PROJECT. THIS REQUIREMENT SHALL APPLY CONTINUOUSLY AND SHALL NOT BE LIMITED TO NORMAL WORKING HOURS, THE CONTRACTOR SHALL DEFEND, INDEMNIFY AND HOLD THE OWNER AND ENGINEER HARMLESS FROM ANY AND ALL LIABILITY REAL OR ALLEGED, IN CONNECTION WITH THE PERFORMANCE OF WORK ON THIS PROJECT.
10. THE CONTRACTOR SHALL FAMILIARIZE HIMSELF WITH THE PLANS, THE SOILS AND/OR GEOLOGY REPORTS, AND THE SITE CONDITIONS PRIOR TO COMMENCING WORK.
11. SHOULD CONFLICTING INFORMATION BE FOUND ON THE PLANS, THE CONTRACTOR SHALL NOTIFY THE PROJECT ARCHITECT OR THE ENGINEER BEFORE PROCEEDING WITH THE WORK IN QUESTION.
12. THE CONTRACTOR SHALL OBTAIN AN O.S.H.A. PERMIT FROM THE CALIFORNIA DIVISION OF INDUSTRIAL SAFETY PRIOR TO THE CONSTRUCTION OF TRENCHES OR EXCAVATIONS, WHICH ARE 5 FEET OR DEEPER.
13. ALL RECOMMENDATIONS, MADE BY THE GEOTECHNICAL/SOILS ENGINEER (AND ENGINEERING GEOLOGIST, WHERE EMPLOYED), AND CONTAINED IN THE REPORTS HEREON, AS APPROVED OR CONDITIONED BY THE CITY, SHALL BE CONSIDERED A PART OF THIS GRADING PLAN.

INSPECTIONS:

1. THE PERMITTEE OR HIS AGENT SHALL NOTIFY THE CITY ENGINEER AT LEAST TWENTY FOUR HOURS IN ADVANCE OF REQUIRED INSPECTIONS AT THE FOLLOWING STAGES OF THE WORK.
   a) INITIAL: WHEN THE SITE HAS BEEN CLEARED OF VEGETATION AND UNAPPROVED FILL, AND IT HAS BEEN SCARIFIED, BENCHED OR OTHERWISE PREPARED FOR FILL. NO FILL SHALL HAVE BEEN PLACED PRIOR TO THIS INSPECTION.
   b) ROUGH: WHEN APPROXIMATE FINAL ELEVATIONS HAVE BEEN ESTABLISHED, DRAINAGE SWALES AND TERRACES ARE GRADED AND READY FOR PAVING, BERMS ARE INSTALLED AT THE TOP OF THE SLOPES, AND THE STATEMENTS REQUIRED BY SECTION 7020 HAVE BEEN RECEIVED.
   c) FINAL: WHEN GRADING HAS BEEN COMPLETED, ALL DRAINAGE DEVICES ARE INSTALLED, SLOPE PLANTING IS ESTABLISHED, IRRIGATION SYSTEMS ARE INSTALLED, AND THE AS-BUILT PLANS, REQUIRED STATEMENTS AND REPORTS HAVE BEEN SUBMITTED.
2. IN ADDITION TO THE INSPECTION REQUIRED OF THE CITY ENGINEER FOR REGULAR GRADING, REPORTS AND STATEMENTS SHALL BE SUBMITTED TO THE CITY ENGINEER IN ACCORDANCE WITH SECTIONS 7020 AND 7021 OF THE BUILDING CODE.
3. CONTRACTOR SHALL SECURE PERMISSION FROM CITY ENGINEER FOR CONSTRUCTION, GRADING AND/OR DISCHARGE OF DRAINAGE WITHIN STREET RIGHT-OF-WAY.
4. REGISTER DEPUTY GRADING INSPECTOR IS REQUIRED ON GRADING AND FOUNDATION EARTHWORK WHERE THE SITE EXCEEDS 60,000 S.F., CUT OR FILL SLOPES EXCEED 2:1, CUT EXCEEDS 40 FT IN HEIGHT AND WITHIN 20 FT OF A PROPERTY LINE, FOUNDATION EXCAVATION BELOW A 1:1 PLANE FROM THE PROPERTY LINE, PROJECTS INVOLVE UNUSUAL HAZARDS OR FOR SHORING WORK INCLUDING SLOT CUTS.

CONTRACTOR NOTES

1. THE CONTRACTOR SHALL NOTIFY UNDERGROUND SERVICE ALERT AT LEAST 48 HOURS PRIOR TO COMMENCEMENT OF EXCAVATION TO ARRANGE FOR FIELD LOCATION OF UTILITY LINES. CALL 1-800-422-4133 FOR THIS SERVICE. ANY UTILITY NOT SUBSCRIBING TO THIS SERVICE SHALL BE CONTACTED DIRECTLY. IT SHALL BE THE CONTRACTOR'S RESPONSIBILITY TO DETERMINE WHETHER ALL UTILITIES HAVE BEEN NOTIFIED.
2. THE CONTRACTOR SHALL OBTAIN A CITY OF LOS ANGELES ENCROACHMENT PERMIT FROM THE DEPARTMENT OF TRANSPORTATION AND PUBLIC WORKS PRIOR TO PERFORMING ANY WORK IN THE CITY RIGHT-OF-WAY. ALL EXCAVATIONS, CONSTRUCTION, AND INSTALLATIONS IN THE CITY RIGHT-OF-WAY REQUIRE INSPECTION BY THE CITY PUBLIC WORKS INSPECTOR. CONTACT THE CITY AT LEAST 48 HOURS IN ADVANCE FOR INSPECTION. FAILURE TO HAVE INSPECTION WILL RESULT IN REOPENING OF THE EXCAVATION AND POSSIBLE RECONSTRUCTION.
3. PRIOR TO EXERCISING ANY RIGHT OR PERFORMING ANY OBLIGATION PURSUANT TO ANY PERMIT ISSUED BY THE CITY OF LOS ANGELES, THE CONTRACTOR SHALL OBTAIN, FILE, AND MAINTAIN WITH THE CITY OF LOS ANGELES A POLICY OF INSURANCE OR CERTIFICATE OF INSURANCE TO COVER ANY AND ALL LIABILITY THAT MAY ARISE FROM THE PERFORMANCE OF ANY WORK PERMITTED BY THE CITY IN THE RIGHT-OF-WAY.
4. ALL CONSTRUCTION ACTIVITIES WITHIN THE CITY RIGHT-OF-WAY SHALL BE DONE IN ACCORDANCE WITH THE 2012 EDITION OF THE AMERICAN PUBLIC WORKS ASSOCIATION STANDARD SPECIFICATIONS FOR PUBLIC WORKS CONSTRUCTION.
5. ALL TRAFFIC CONTROL, BARRICADING, AND CONSTRUCTION SIGNING SHALL BE IN CONFORMANCE WITH THE WORK AREA TRAFFIC CONTROL HANDBOOK (WATCH). DETOUR SIGNS SHALL BE POSTED ON WOOD OR METAL POSTS. SIGNS SHALL NOT BE POSTED ON ANY TREE OR TRAFFIC SIGN.
6. A MINIMUM OF 72 HOURS PRIOR TO THE TIME A STREET HAS RESTRICTED PARKING, THE CONTRACTOR SHALL FURNISH AND ERECT TEMPORARY "NO PARKING" SIGNS AS APPROVED BY THE CITY ENGINEER. THESE TEMPORARY SIGNS MAY BE ATTACHED TO PORTABLE BARRICADES OR BY ANY OTHER METHOD APPROVED BY THE CITY ENGINEER, AT THE OPTION OF THE CONTRACTOR. SIGNS SHALL BE SPACED A MAXIMUM OF 75 FEET APART. THESE SIGNS SHALL BE REMOVED WHEN THE STREET'S CURB LANES ARE REOPENED FOR VEHICLES TO PARK.
7. NO WATER SHALL BE TAKEN FROM FIRE HYDRANTS WITHOUT APPROVAL FROM THE JURISDICTIONAL WATER AGENCY.
8. ALL NON-STORMWATER DISCHARGES FROM THE CONSTRUCTION PHASE ACTIVITIES AT THE PROJECT SITE (I.E., MIXING AND CLEANING OF CONSTRUCTION MATERIALS, CONCRETE AND PLASTER WASHOUT, DISPOSAL OF PAINTS, ADHESIVES, SOLVENTS, AND LANDSCAPE PRODUCTS) SHALL BE PROHIBITED FROM ENTERING THE PUBLIC STORM DRAINAGE SYSTEM (INCLUDING MUNICIPAL STREETS, CATCH BASINS, CURBS, GUTTERS, DITCHES, MAN-MADE CHANNELS, OR UNDERGROUND STORM DRAINS).
9. CONTRACTOR RESPONSIBLE TO PREPARE A TEMPORARY TRAFFIC CONTROL PLAN FOR WORK IN THE PUBLIC RIGHT-OF-WAY.
10. UTILITY BEDDING AND BACKFILL SHOULD BE PLACED IN ACCORDANCE WITH GEOTECHNICAL RECOMMENDATIONS.
11. EXISTING UTILITIES OR BURIED STRUCTURES THAT ARE DEMOLISHED/REMOVED SHOULD BE REPLACED WITH PROPERLY COMPACTED FILL.

LEGAL DESCRIPTION:

THE LAND REFERRED TO HEREIN BELOW IS SITUATED IN THE CITY OF LOS ANGELES, IN THE COUNTY OF LOS ANGELES, STATE OF CALIFORNIA, AND IS DESCRIBED AS FOLLOWS:

PARCEL 1:

XXXX

PARCEL 2:

XXXX

GRADING NOTES:

1. GRADING OPERATIONS SHALL BE CONDUCTED IN ACCORDANCE WITH THE CODE OF THE CITY OF LOS ANGELES AND ALL REVISIONS THERETO.
2. A PRE-JOB MEETING WITH THE GRADING INSPECTOR IS REQUIRED PRIOR TO THE START OF GRADING OPERATIONS. SUBSEQUENT INSPECTIONS SHALL BE REQUESTED IN ACCORDANCE WITH THE INSPECTOR'S INSTRUCTIONS OF THE FIRST INSPECTION.
3. EXISTING GROUND UPON WHICH FILL OR BASE IS TO BE PLACED SHALL BE CLEARED OF WEEDS, DEBRIS, TOPSOIL, AND ALL OTHER DELETERIOUS MATERIALS; NO FILL SHALL BE PLACED UNTIL PREPARATION OF THE EXISTING GROUND HAS BEEN APPROVED BY THE SOILS ENGINEER OF RECORD AND BY THE INSPECTOR.
4. PROTECTIVE MEASURES SHALL BE TAKEN BY THE CONTRACTOR AND THE OWNER TO PROTECT ADJACENT PROPERTY, PUBLIC AND UTILITIES DURING GRADING OPERATIONS. THE CONTRACTOR ASSUMES ALL LIABILITY FOR THE UNDERGROUND UTILITY PIPES, CONDUITS, OR STRUCTURES, WHETHER SHOWN OR NOT ON THE PLAN.
5. WATER CONTENT SHALL BE CONTROLLED AS DETERMINED BY THE SOILS ENGINEER AND THE INSPECTOR.
6. PERMISSION SHALL BE SECURED FROM THE ENGINEERING DEPARTMENT IF THE TRUCKS ARE LOADED IN THE STREET.
7. UNSUITABLE MATERIAL SHALL BE DISPOSED OF OFF-SITE. THE LOCATION OF DUMPING EXCESS SOIL SHALL BE APPROVED BY THE GRADING INSPECTOR PRIOR TO STARTING EXCAVATION.
8. IF A GRADING JOB EXTENDS OVER A PERIOD OF TIME EXCEEDING SIX MONTHS, THE DEPARTMENT MAY REQUIRE PLANTING OF THOSE PORTIONS OF THE JOB WHERE ALL OTHER GRADING REQUIREMENTS HAVE BEEN MET IN ORDER TO PREVENT DUST AND EROSION.
9. LOOSE MATERIAL SHALL NOT EXCEED 3" IN DEPTH ON A FILLED SLOPE.
10. ALL LOOSE ON SITE FILL SHALL BE REMOVED AND COMPACTED.
11. ALL MAN-MADE FILL SHALL BE COMPACTED TO A MINIMUM 95 PERCENT OF THE MAXIMUM DRY DENSITY OF THE FILL MATERIAL PER THE LATEST VERSION OF ASTM D-1557.
12. AGGREGATE BASE MATERIALS BENEATH PAVEMENTS SHOULD BE COMPACTED TO A RELATIVE COMPACTION OF 95 PERCENT AS EVALUATED BY ASTM D1557.
13. SUFFICIENT TESTS OF THE FILL SOILS SHALL BE MADE TO DETERMINE THE RELATIVE COMPACTION OF THE FILL IN ACCORDANCE WITH THE FOLLOWING MINIMUM GUIDELINES:
    A. ONE TEST FOR EACH TWO FOOT VERTICAL LIFT.
    B. ONE TEST FOR EACH 500 CUBIC YARDS OF MATERIAL PLACED.
    C. ONE TEST AT THE LOCATION OF THE FINAL FILL SLOPE FOR EACH BUILDING SITE (LOT) IN EACH FOUR FOOT VERTICAL LIFT OF PORTION THEREOF.
    D. ONE TEST IN THE VICINITY OF EACH BUILDING PAD FOR EACH FOUR FOOT VERTICAL LIFT OR PORTION THEREOF.
15. IMPORT SOILS SHOULD CONSIST OF CLEAN, COMPACTABLE MATERIALS POSSESSING EXPANSION CHARACTERISTICS SIMILAR TO OR BETTER THAN THE ON-SITE SOILS. IMPORT SOILS SHOULD BE FREE OF TRASH, DEBRIS OR OTHER OBJECTIONABLE MATERIAL. CONTRACTOR SHALL NOTIFY THE PROJECT GEOTECHNICAL ENGINEER NOT LESS THAN 72 HOURS IN ADVANCE OF THE LOCATION OF ANY SOILS PROPOSED FOR IMPORT. EACH PROPOSED IMPORT SOURCE SHALL BE SAMPLED, TESTED, AND APPROVED PRIOR TO DELIVERY OF SOILS FOR USE ON THE SITE.
16. ALL FILL UNDER THE BUILDING FOUNDATION MUST BE CERTIFIED BY THE SOILS ENGINEER AS TO PROPER BEARING VALUE DESIGN AND ITS COMPLIANCE WITH THE SOILS REPORT ON NOTE 13.
17. ALL SUBGRADE UNDER AREAS TO BE PAVED SHALL BE CERTIFIED BY THE SOILS ENGINEER IN COMPLIANCE WITH THE LOS ANGELES MUNICIPAL CODE.
18. THE ENGINEERING GEOLOGIST, SOILS ENGINEER AND CIVIL ENGINEER, IN COMPLIANCE WITH THE LOS ANGELES MUNICIPAL CODE, SHALL PROVIDE THE DEPARTMENT WITH A GRADING CERTIFICATION UPON COMPLETION OF THE JOB.
19. APPROVAL OF THIS PLAN IS FOR GRADING AND PAVING ON SITE ONLY AND DOES NOT CONSTITUTE APPROVAL OF ANY BUILDING, WALL OR OTHER STRUCTURE SHOWN ON-SITE NOR ANY OFF-SITE IMPROVEMENTS SHOWN.
20. NO FILL SHALL BE PLACED DURING UNFAVORABLE WEATHER CONDITIONS. THE SOILS ENGINEER AND GRADING INSPECTOR SHALL VERIFY MOISTURE CONTENT AND DENSITY PRIOR TO PLACEMENT OF ADDITIONAL FILL AFTER HEAVY RAINS.
21. ALL CONSTRUCTION IN PUBLIC RIGHT OF WAY SHALL BE UNDER SEPARATE PERMIT AND APPROVED BY THE ENGINEERING DEPARTMENT.

NATIONAL POLLUTION DISCHARGE ELIMINATION SYSTEM (NPDES) REQUIREMENTS

22. OWNER SHALL KEEP THE CONSTRUCTION AREA SUFFICIENTLY DAMPENED TO CONTROL DUST CAUSED BY GRADING AND CONSTRUCTION. OWNER SHALL, AT ALL TIMES, PROVIDE REASONABLE CONTROL OF DUST CAUSED BY WIND.
23. THE EXPORT OR IMPORT MATERIAL IN EACH TRUCKLOAD SHALL BE KEPT LOW ENOUGH TO PREVENT SPILLAGE AND SHALL BE SUFFICIENTLY WET DOWN TO PREVENT DUST.
24. A STAGING AREA SHALL BE DESIGNATED WHERE EACH TRUCK IS PREPARED FOR ROAD TRAVEL AND ALL LOOSE MATERIAL REMOVED. ANY SUBSTANCE TO DROP FROM THE BODY, TIRES, OR WHEELS OF ANY VEHICLE UPON THE PUBLIC RIGHT OF WAY SHALL BE REMOVED IMMEDIATELY AND PERMANENTLY.
25. EROSION CONTROL MEASURES SHALL BE IN PLACE FROM OCTOBER 1 THROUGH APRIL 15.

GRADING GENERAL NOTES:

1. ALL WORK AND MATERIAL REQUIRED BY THESE PLANS SHALL BE IN ACCORDANCE WITH THE "STANDARD SPECIFICATIONS FOR PUBLIC WORKS CONSTRUCTION", LATEST EDITION, INCLUDING AMENDMENTS AND SUPPLEMENTS THERETO AS PROMULGATED BY A.P.W.A., LOS ANGELES COUNTY ORDINANCE NO. 2225, CHAPTER 70 (EXCAVATION AND GRADING) AND/OR LOCAL ORDINANCES AS APPLICABLE.
2. CONTRACTORS BIDDING THE JOB ARE EXPECTED TO PREPARE THEIR OWN ESTIMATES AND WILL IMMEDIATELY NOTIFY THE CIVIL ENGINEER AND THE CITY ENGINEER UPON DISCOVERING ANY ERRORS, OMISSIONS, OR DIFFERENCES THAT AFFECT THE COST OF THE WORK.
3. THE CONTRACTOR IS REQUIRED TO FAMILIARIZE HIMSELF WITH THE PLANS, THE SOILS AND/OR GEOLOGIC REPORTS, AND THE SITE PRIOR TO COMMENCING WORK.
4. THE EXISTENCE AND LOCATION OF ANY UNDERGROUND UTILITY PIPES, CONDUITS, OR STRUCTURES SHOWN ON THESE PLANS WERE OBTAINED FROM THE OWNER BY AN UNDERGROUND UTILITY STUDY PERFORMED BY C2 BELOW FOR ON-SITE UTILITIES. FOR OFF-SITE UTILITIES INFORMATION WAS COLLECTED BY A SEARCH OF THE AVAILABLE CITY RECORDS. THE CONTRACTOR IS REQUIRED TO INVESTIGATE THE UTILITY LINES FOR BOTH HORIZONTAL AND VERTICAL ALIGNMENT. CONTRACTOR IS REQUIRED TO TAKE DUE TO PRECAUTIONARY MEASURES TO PROTECT THE UTILITY LINES SHOWN OR NOT SHOWN ON THESE DRAWINGS. THE CONTRACTOR IS RESPONSIBLE FOR ANY DAMAGES TO UTILITY LINES OR LIABILITY FROM HITTING UTILITY LINES DURING THE COURSE OF CONSTRUCTION.
5. THE OWNERS OF POLE LINES, PIPELINES, AND OTHER SUBSTRUCTURES IN THE AREA COVERED BY THESE PLANS SHALL BE NOTIFIED BY THE CONTRACTOR AT LEAST (2) WORKING DAYS PRIOR TO COMMENCING WORK.
6. PROVISIONS WILL BE MADE FOR CONTRIBUTORY DRAINAGE AT ALL TIMES.
7. ANY MODIFICATIONS OF, OR CHANGES IN, APPROVED GRADING PLANS MUST BE APPROVED BY THE CITY ENGINEER.
8. ALL GRADED SITES MUST HAVE DRAINAGE SWALES, BERMS, AND OTHER DRAINAGE DEVICES APPROVED AT THE ROUGH GRADING STAGE. (SECTION 70230 (c) OF THE BUILDING CODE.)
9. A COPY OF GRADING PERMIT AND APPROVED GRADING PLANS MUST BE IN THE POSSESSION OF A RESPONSIBLE PERSON AND AVAILABLE AT THE SITE AT ALL TIMES.
10. THE FIELD ENGINEER MUST SET DRAINAGE STAKES FOR ALL DRAINAGE DEVICES.
11. FINAL GRADING MUST BE APPROVED BEFORE OCCUPANCY OF ANY BUILDING WILL BE ALLOWED.
12. ALL GRADING SLOPES SHALL BE PLANTED AND SPRINKLERED.
13. STANDARD 12 INCH HIGH BERM IS REQUIRED AT TOP OF ALL GRADED SLOPES.
14. NO FILL TO BE PLACED, UNTIL THE CITY GRADING INSPECTOR HAS INSPECTED AND APPROVED THE BOTTOM EXCAVATION.
15. MAN-MADE FILL SHALL BE COMPACTED TO A MINIMUM RELATIVE COMPACTION OF 90% MAX. DRY DENSITY WITHIN 40 FEET BELOW FINISH GRADE AND 93% OF MAX. DRY DENSITY DEEPER THAN 40 FEET BELOW FINISH GRADE, UNLESS A LOWER RELATIVE COMPACTION (NOT LESS THAN 90% OF MAX. DRY DENSITY) IS JUSTIFIED BY THE SOILS ENGINEER.
16. TEMPORARY EROSION CONTROL TO BE INSTALLED BETWEEN OCTOBER 1 AND APRIL 15. OBTAIN GRADING INSPECTOR'S AND DEPARTMENT OF PUBLIC WORKS APPROVAL OF PROPOSED PROCEDURES.
17. CONTINUOUS INSPECTION BY THE SOILS ENGINEER / GEOLOGIST IS REQUIRED FOR R&R AND SLOPE CONSTRUCTION.
18. PAVING SHALL BE INSTALLED IN TWO LIFTS. THE FIRST LIFT TO BE PLACED AS SOON AS POSSIBLE FOLLOWING NTP TO HELP FACILITY SITE ACCESS. THE SECOND LIFT SHALL BE PLACED TEN DAYS TO ONE WEEK PRIOR TO THE SUBSTANTIAL COMPLETION OF THE BUILDING. CUTTING OR PATCHING OF ASPHALT NOT ACCEPTABLE.

GRADING GENERAL NOTES (CONT.):

19. THE DESIGNATION OF 2% CROSSFALL ON SIDEWALKS IS AN ADA MAXIMUM. A CROSSFALL OF 1.8% IS AN ACCEPTABLE ALTERNATIVE TO ALLOW FOR CONSTRUCTION TOLERANCE.
20. RETAINING WALLS LOCATED CLOSER TO THE PROPERTY LINE THAN THE HEIGHT OF THE WALL SHALL BE BACKFILLED NOT LATER THAN 10 DAYS AFTER CONSTRUCTION OF THE WALL AND NECESSARY STRUCTURAL SUPPORTING MEMBERS UNLESS RECOMMENDED OTHERWISE BY RESPONSIBLE ENGINEER.

PRIVATE ENGINEER'S NOTICE TO SUBCONTRACTORS

1. PRIOR TO COMMENCING CONSTRUCTION, THE CONTRACTOR SHALL VERIFY ALL JOIN CONDITIONS FOR GRADING, DRAINAGE AND UNDERGROUND FACILITIES, INCLUDING LOCATION AND ELEVATION OF EXISTING UNDERGROUND FACILITIES AT CROSSINGS WITH PROPOSED UNDERGROUND FACILITIES. IF CONDITIONS DIFFER FROM THOSE SHOWN ON THE PLANS, THE CONTRACTOR SHALL NOTIFY THE ENGINEER AND SHALL NOT BEGIN CONSTRUCTION UNTIL THE CHANGED CONDITIONS HAVE BEEN EVALUATED.
2. THE EXISTENCE, LOCATION AND CHARACTERISTICS OF UNDERGROUND UTILITY INFORMATION SHOWN ON THESE PLANS HAS BEEN OBTAINED FROM A REVIEW OF AVAILABLE RECORD DATA. NO REPRESENTATION IS MADE AS TO THE ACCURACY OR COMPLETENESS OF SAID UTILITY INFORMATION. THE CONTRACTOR SHALL TAKE PRECAUTIONARY MEASURES TO PROTECT THE UTILITY LINES SHOWN AND ANY OTHER LINES NOT OF RECORD OR NOT SHOWN ON THESE PLANS.
3. THE CONTRACTOR SHALL ASSUME SOLE AND COMPLETE RESPONSIBILITY FOR THE JOB SITE CONDITIONS, INCLUDING SAFETY OF ALL PERSONS AND PROPERTY, DURING THE COURSE OF CONSTRUCTION OF THIS PROJECT. THIS REQUIREMENT SHALL APPLY CONTINUOUSLY, AND SHALL NOT BE LIMITED TO NORMAL WORKING HOURS. THE CONTRACTOR SHALL DEFEND, INDEMNIFY AND HOLD THE OWNER AND THE ENGINEER HARMLESS FROM ANY AND ALL LIABILITY, REAL OR ALLEGED, IN CONNECTION WITH PERFORMANCE OF WORK ON THIS PROJECT.
4. THE CONTRACTOR SHALL FAMILIARIZE HIMSELF WITH THE PLANS, THE SOILS AND/OR GEOLOGY REPORTS, AND THE SITE CONDITIONS PRIOR TO COMMENCING WORK.
5. SHOULD CONFLICTING INFORMATION BE FOUND ON THE PLANS, THE CONTRACTOR SHALL NOTIFY THE PROJECT ENGINEER AT PSOMAS BEFORE PROCEEDING WITH THE WORK IN QUESTION.

ESTIMATED EARTHWORK QUANTITIES:

FILL:	1,450 C.Y.
15% SHRINKING FACTOR:	220 C.Y.
***TOTAL IMPORT=**	**1,670 C.Y.**

THE ABOVE LISTED QUANTITIES REFLECT THE ENGINEER'S ESTIMATE OF THE EARTHWORK VOLUMES.

A 15% SHRINKING FACTOR IS ASSUMED.

*THE TOTAL EXPORT VOLUME INCLUDES A 10% CONTINGENCY FACTOR.

THESE QUANTITIES ARE FOR DESIGN AND BONDING PURPOSES ONLY, AND NOT FOR CONTRACT PURPOSES.

THE CONTRACTOR IS RESPONSIBLE FOR COMPUTING HIS OWN QUANTITIES.

BENCHMARKS:

BENCHMARK NO. 13-14428

DESCRIPTION: SPIKE 3' N. OF CURB BEVERLY BVD. 11' E OF BC E OF SPALDING AVE. E OF CB

ELEVATION: 202.851
DATUM: NAVD 2000 ADJ.

BASIS OF BEARINGS:

HORIZONTAL DATUM IS BASED UPON STATE PLANE COORDINATES, CALIFORNIA COORDINATE SYSTEM ZONE 5, NAD83(2011) EPOCH 2010.00. POSITIONAL VALUES SHOWN HEREON ARE BASED UPON LOCAL CONTROL POINTS AND DERIVED FROM THE GPS STATIC OBSERVATIONS UTILIZING DATA FROM SOUTHERN CALIFORNIA INTEGRATED GPS NETWORK (SCIGN) CONTINUOUSLY OPERATING REFERENCE STATIONS (CORS) LFRS, LEEP, UCLP, AND NOPK

SOILS ENGINEER/GEOLOGISTS:

GROUP DELTA CONSULTANTS, INC.
370 AMAPOLA AVENUE, SUITE 212
TORRANCE, CALIFORNIA 90501
PHONE: (310)-320-5100
CONTACT: PIROOZ KASHIGHANDI PH.D., P.E., G.E.

THIS PLAN HAS BEEN REVIEWED AND CONFORMS TO RECOMMENDATIONS OF SOILS ENGINEERING/GEOLOGIC REPORT UNDER FILE NO. LA-1470 DATED 10-9-2020.

DATE

PROJECT CONTACT INFORMATION

JOB ADDRESS:

100 THE GROVE DR.
LOS ANGELES, CA 90036

ARCHITECT:

BELZBERG ARCHITECTS
2331 MAIN STREET
SANTA MONICA, CA 90405
PHONE: (310)-453-9611
WWW.BELZBERGARCHITECTS.COM

OWNER

LOS ANGELES MUSEUM OF THE HOLOCAUST
100 THE GROVE DRIVE
LOS ANGELES, CA 90036
CONTACT: GUY LIPA

CIVIL ENGINEER:

PSOMAS
555 S. FLOWER STREET, SUITE 4300
LOS ANGELES, CA 90071
PHONE: (213) 223-1400
CONTACT: DAVID J. CURTIS, P.E.

INDEX TO SHEETS

SHT No.	DESCRIPTION
C100	TITLE SHEET
C110	EXISTING CONDITIONS / DEMO PLAN
C120	GRADING PLAN
C130	UTILITY PLAN
C140	LID PLAN
C150	HORIZONTAL CONTROL PLAN
C160	EROSION CONTROL PLAN

UNDERGROUND SERVICE ALERT
CALLTHREE WORKING DAYS
BEFORE YOU DIG:

811

Know what's **below.**
Call before you dig.

NOT FOR CONSTRUCTION

10.AUG.2021

ba
belzberg architects
2321 MAIN STREET
SANTA MONICA, CA 90405
310.453.9611
www.belzbergarchitects.com

CONSULTANT:

PSOMAS
555 S. Flower Street, Ste 4300
Los Angeles, CA 90071
t +213.223.1400
www.psomas.com

#	DESCRIPTION	DATE

HOLOCAUST MUSEUM LA EXPANSION

100 THE GROVE DRIVE
LOS ANGELES, CA 90036

TITLE SHEET

PROJECT NUMBER: 17009

C100

12/17/2020 12:48:20 AM

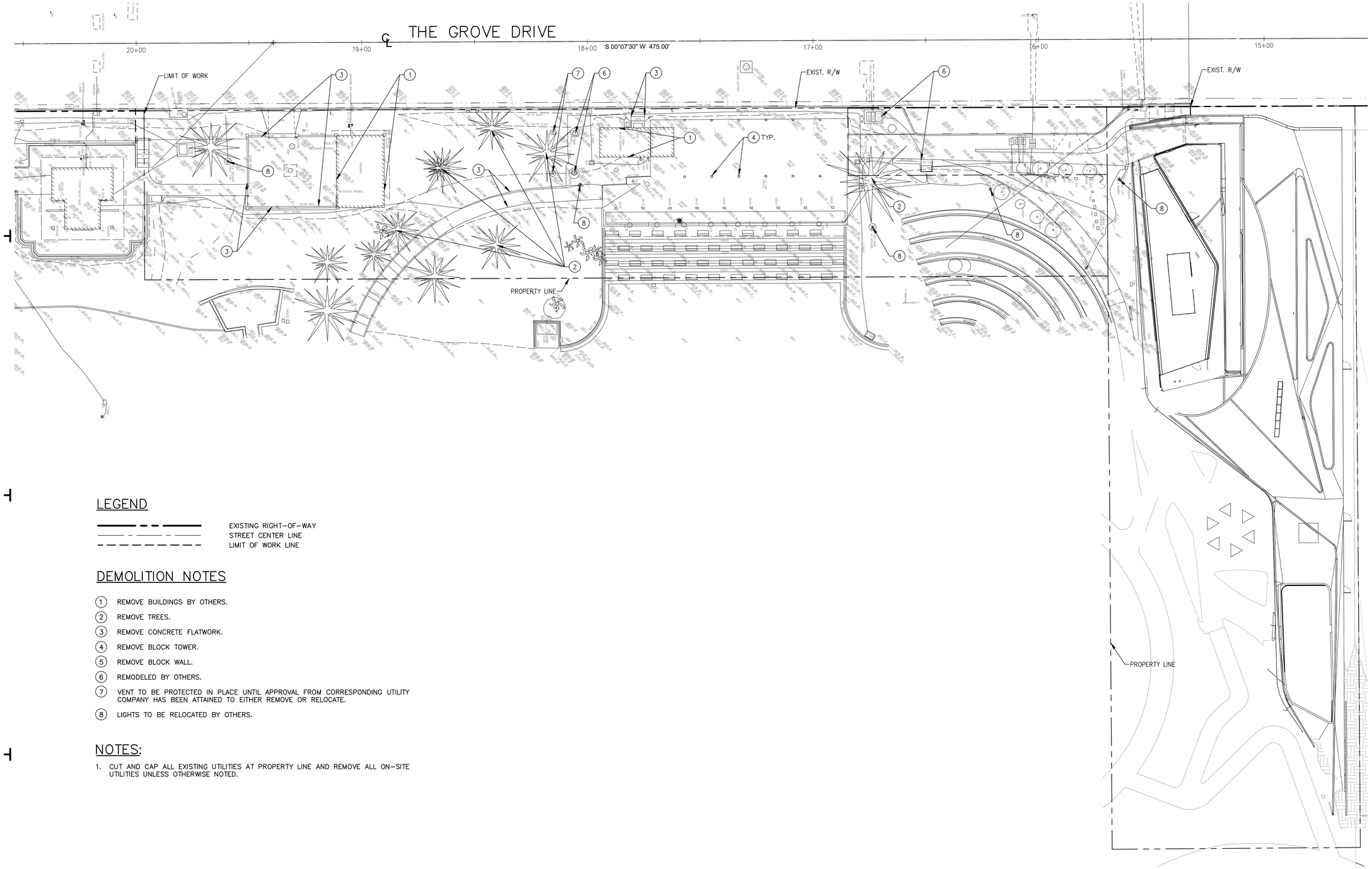

LEGEND

EXISTING RIGHT–OF–WAY
STREET CENTER LINE
LIMIT OF WORK LINE

DEMOLITION NOTES

1. REMOVE BUILDINGS BY OTHERS.
2. REMOVE TREES.
3. REMOVE CONCRETE FLATWORK.
4. REMOVE BLOCK TOWER.
5. REMOVE BLOCK WALL.
6. REMODELED BY OTHERS.
7. VENT TO BE PROTECTED IN PLACE UNTIL APPROVAL FROM CORRESPONDING UTILITY COMPANY HAS BEEN ATTAINED TO EITHER REMOVE OR RELOCATE.
8. LIGHTS TO BE RELOCATED BY OTHERS.

NOTES:

1. CUT AND CAP ALL EXISTING UTILITIES AT PROPERTY LINE AND REMOVE ALL ON–SITE UTILITIES UNLESS OTHERWISE NOTED.

20' 10' 0' 20' 40'
GRAPHIC SCALE: 1"=20"

NOT FOR CONSTRUCTION

10.AUG.2021

belzberg architects
2321 MAIN STREET
SANTA MONICA, CA 90405
310.453.9611
www.belzbergarchitects.com

CONSULTANT:

PSOMAS
555 S. Flower Street, Ste 4300
Los Angeles, CA 90071
t +213.223.1400
www.psomas.com

#	DESCRIPTION	DATE

HOLOCAUST MUSEUM LA EXPANSION

100 THE GROVE DRIVE
LOS ANGELES, CA 90036

EXISTING CONDITION/ DEMO PLAN

PROJECT NUMBER: 17009

C110

12/17/2020 12:49:20 AM

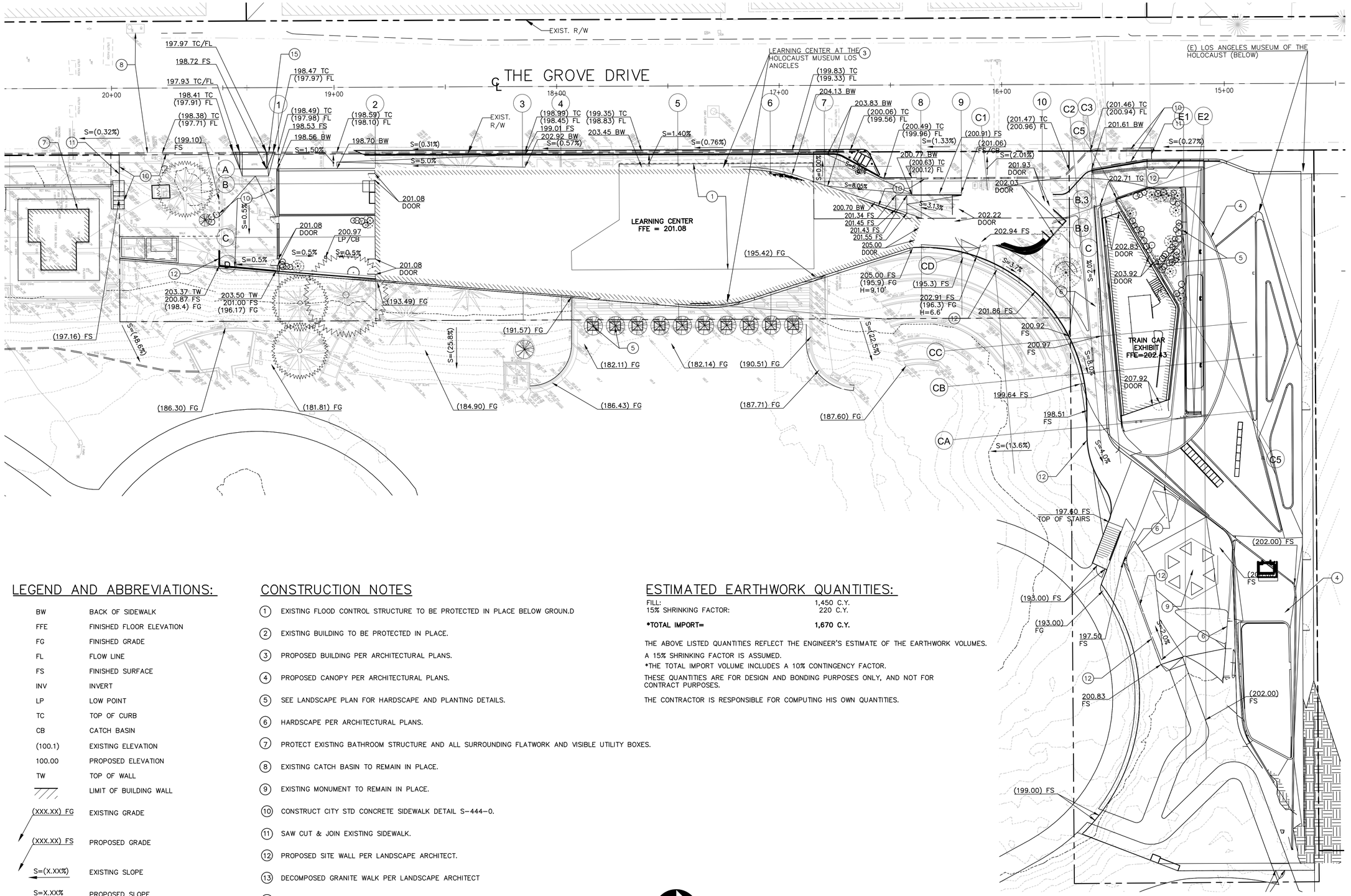

LEGEND AND ABBREVIATIONS:

BW	BACK OF SIDEWALK
FFE	FINISHED FLOOR ELEVATION
FG	FINISHED GRADE
FL	FLOW LINE
FS	FINISHED SURFACE
INV	INVERT
LP	LOW POINT
TC	TOP OF CURB
CB	CATCH BASIN
(100.1)	EXISTING ELEVATION
100.00	PROPOSED ELEVATION
TW	TOP OF WALL
	LIMIT OF BUILDING WALL
(XXX.XX) FG	EXISTING GRADE
(XXX.XX) FS	PROPOSED GRADE
S=(X.XX%)	EXISTING SLOPE
S=X.XX%	PROPOSED SLOPE

CONSTRUCTION NOTES

1. EXISTING FLOOD CONTROL STRUCTURE TO BE PROTECTED IN PLACE BELOW GROUN.D
2. EXISTING BUILDING TO BE PROTECTED IN PLACE.
3. PROPOSED BUILDING PER ARCHITECTURAL PLANS.
4. PROPOSED CANOPY PER ARCHITECTURAL PLANS.
5. SEE LANDSCAPE PLAN FOR HARDSCAPE AND PLANTING DETAILS.
6. HARDSCAPE PER ARCHITECTURAL PLANS.
7. PROTECT EXISTING BATHROOM STRUCTURE AND ALL SURROUNDING FLATWORK AND VISIBLE UTILITY BOXES.
8. EXISTING CATCH BASIN TO REMAIN IN PLACE.
9. EXISTING MONUMENT TO REMAIN IN PLACE.
10. CONSTRUCT CITY STD CONCRETE SIDEWALK DETAIL S-444-0.
11. SAW CUT & JOIN EXISTING SIDEWALK.
12. PROPOSED SITE WALL PER LANDSCAPE ARCHITECT.
13. DECOMPOSED GRANITE WALK PER LANDSCAPE ARCHITECT
14. REMOVE EXISTING CURB RAMP.
15. CONSTRUCT CASE 1 DRIVEWAY PER CITY OF LA STD. PLAN S-440-4.

ESTIMATED EARTHWORK QUANTITIES:

FILL:	1,450 C.Y.
15% SHRINKING FACTOR:	220 C.Y.
***TOTAL IMPORT=**	**1,670 C.Y.**

THE ABOVE LISTED QUANTITIES REFLECT THE ENGINEER'S ESTIMATE OF THE EARTHWORK VOLUMES.

A 15% SHRINKING FACTOR IS ASSUMED.

*THE TOTAL IMPORT VOLUME INCLUDES A 10% CONTINGENCY FACTOR.

THESE QUANTITIES ARE FOR DESIGN AND BONDING PURPOSES ONLY, AND NOT FOR CONTRACT PURPOSES.

THE CONTRACTOR IS RESPONSIBLE FOR COMPUTING HIS OWN QUANTITIES.

20 10 0 20 40
GRAPHIC SCALE: 1"=20'

NOT FOR CONSTRUCTION

10.AUG.2021

belzberg architects
2321 MAIN STREET
SANTA MONICA, CA 90405
310.453.9611
www.belzbergarchitects.com

CONSULTANT:

PSOMAS
555 S. Flower Street, Ste 4300
Los Angeles, CA 90071
t +213.223.1400
www.psomas.com

#	DESCRIPTION	DATE

HOLOCAUST MUSEUM LA EXPANSION

100 THE GROVE DRIVE
LOS ANGELES, CA 90036

GRADING PLAN

PROJECT NUMBER: 17009

C120

12/17/2020 12:48:20 AM

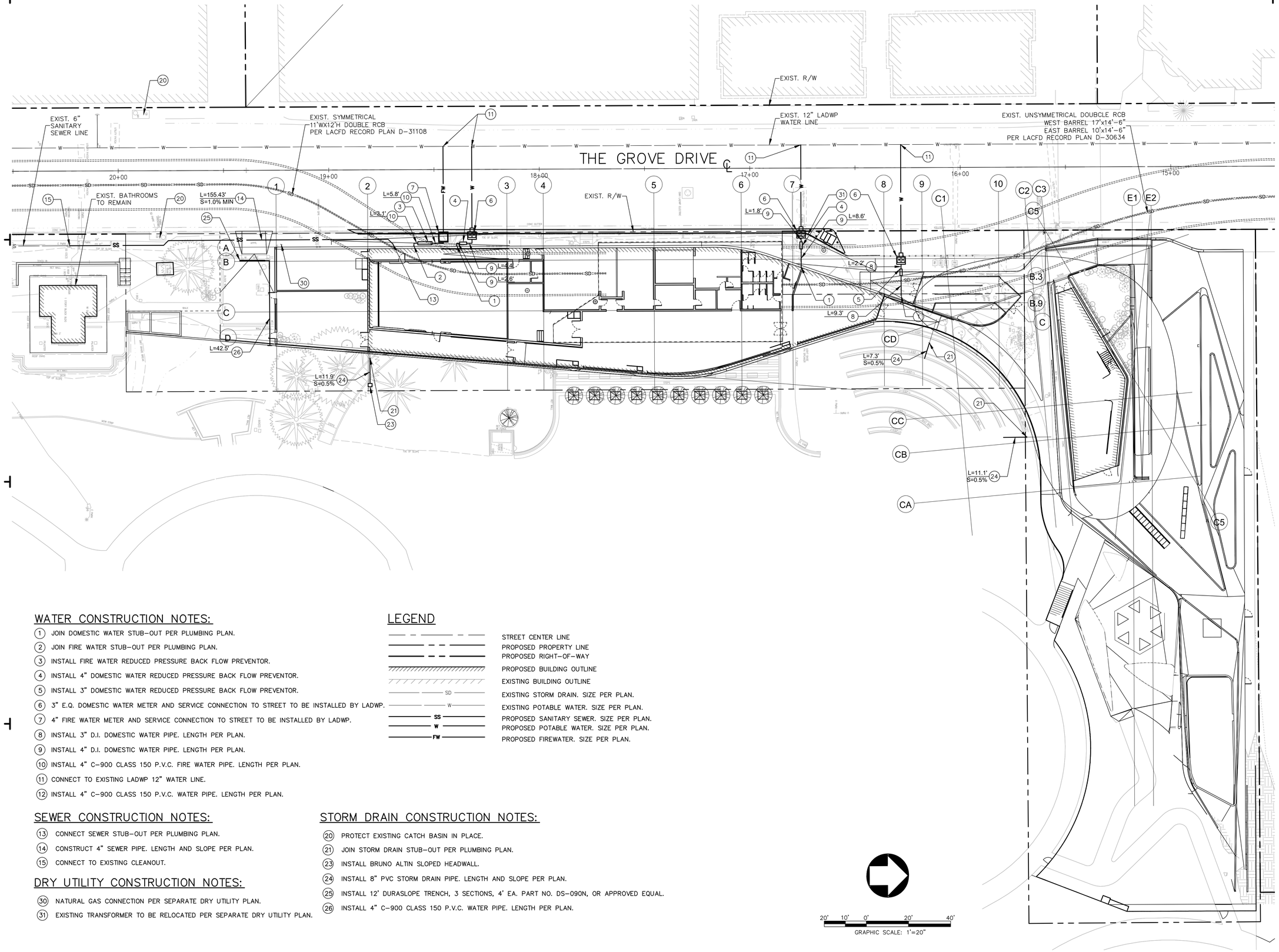

WATER CONSTRUCTION NOTES:

1. JOIN DOMESTIC WATER STUB-OUT PER PLUMBING PLAN.
2. JOIN FIRE WATER STUB-OUT PER PLUMBING PLAN.
3. INSTALL FIRE WATER REDUCED PRESSURE BACK FLOW PREVENTOR.
4. INSTALL 4" DOMESTIC WATER REDUCED PRESSURE BACK FLOW PREVENTOR.
5. INSTALL 3" DOMESTIC WATER REDUCED PRESSURE BACK FLOW PREVENTOR.
6. 3" E.Q. DOMESTIC WATER METER AND SERVICE CONNECTION TO STREET TO BE INSTALLED BY LADWP.
7. 4" FIRE WATER METER AND SERVICE CONNECTION TO STREET TO BE INSTALLED BY LADWP.
8. INSTALL 3" D.I. DOMESTIC WATER PIPE. LENGTH PER PLAN.
9. INSTALL 4" D.I. DOMESTIC WATER PIPE. LENGTH PER PLAN.
10. INSTALL 4" C-900 CLASS 150 P.V.C. FIRE WATER PIPE. LENGTH PER PLAN.
11. CONNECT TO EXISTING LADWP 12" WATER LINE.
12. INSTALL 4" C-900 CLASS 150 P.V.C. WATER PIPE. LENGTH PER PLAN.

LEGEND

- STREET CENTER LINE
- PROPOSED PROPERTY LINE
- PROPOSED RIGHT-OF-WAY
- PROPOSED BUILDING OUTLINE
- EXISTING BUILDING OUTLINE
- SD — EXISTING STORM DRAIN. SIZE PER PLAN.
- W — EXISTING POTABLE WATER. SIZE PER PLAN.
- SS — PROPOSED SANITARY SEWER. SIZE PER PLAN.
- W — PROPOSED POTABLE WATER. SIZE PER PLAN.
- FW — PROPOSED FIREWATER. SIZE PER PLAN.

SEWER CONSTRUCTION NOTES:

13. CONNECT SEWER STUB-OUT PER PLUMBING PLAN.
14. CONSTRUCT 4" SEWER PIPE. LENGTH AND SLOPE PER PLAN.
15. CONNECT TO EXISTING CLEANOUT.

DRY UTILITY CONSTRUCTION NOTES:

30. NATURAL GAS CONNECTION PER SEPARATE DRY UTILITY PLAN.
31. EXISTING TRANSFORMER TO BE RELOCATED PER SEPARATE DRY UTILITY PLAN.

STORM DRAIN CONSTRUCTION NOTES:

20. PROTECT EXISTING CATCH BASIN IN PLACE.
21. JOIN STORM DRAIN STUB-OUT PER PLUMBING PLAN.
23. INSTALL BRUNO ALTIN SLOPED HEADWALL.
24. INSTALL 8" PVC STORM DRAIN PIPE. LENGTH AND SLOPE PER PLAN.
25. INSTALL 12' DURASLOPE TRENCH, 3 SECTIONS, 4' EA. PART NO. DS-090N, OR APPROVED EQUAL.
26. INSTALL 4" C-900 CLASS 150 P.V.C. WATER PIPE. LENGTH PER PLAN.

NOT FOR CONSTRUCTION

10.AUG.2021

ba
belzberg architects
2321 MAIN STREET
SANTA MONICA, CA 90405
310.453.9611
www.belzbergarchitects.com

CONSULTANT:

PSOMAS
555 S. Flower Street, Ste 4300
Los Angeles, CA 90071
t +213.223.1400
www.psomas.com

#	DESCRIPTION	DATE

HOLOCAUST MUSEUM LA EXPANSION

100 THE GROVE DRIVE
LOS ANGELES, CA 90036

UTILITY PLAN

PROJECT NUMBER: 17009

C130

12/17/2020 12:48:20 AM

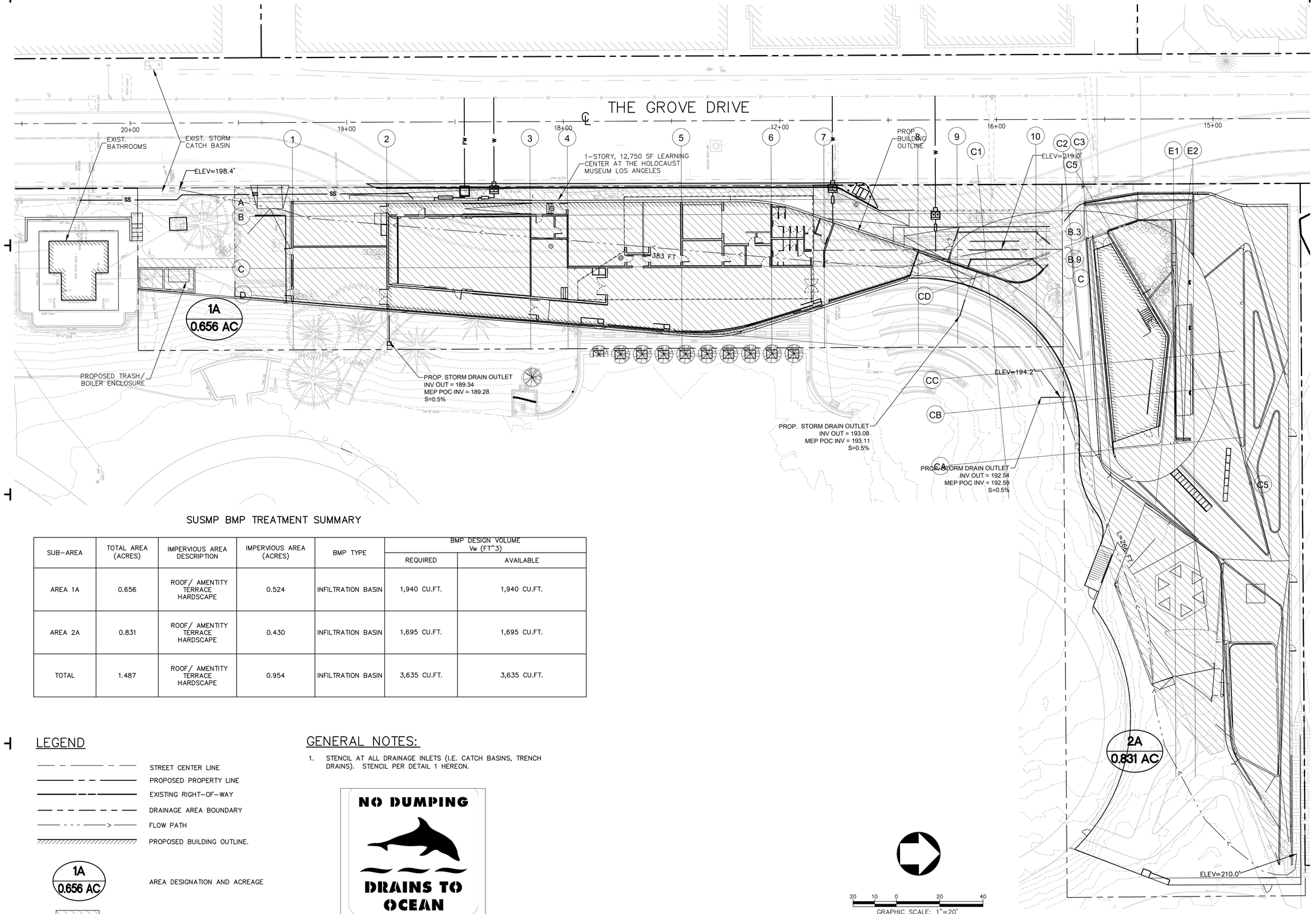

SUSMP BMP TREATMENT SUMMARY

SUB-AREA	TOTAL AREA (ACRES)	IMPERVIOUS AREA DESCRIPTION	IMPERVIOUS AREA (ACRES)	BMP TYPE	BMP DESIGN VOLUME Vm (FT^3)	
					REQUIRED	AVAILABLE
AREA 1A	0.656	ROOF/ AMENTITY TERRACE HARDSCAPE	0.524	INFILTRATION BASIN	1,940 CU.FT.	1,940 CU.FT.
AREA 2A	0.831	ROOF/ AMENTITY TERRACE HARDSCAPE	0.430	INFILTRATION BASIN	1,695 CU.FT.	1,695 CU.FT.
TOTAL	1.487	ROOF/ AMENTITY TERRACE HARDSCAPE	0.954	INFILTRATION BASIN	3,635 CU.FT.	3,635 CU.FT.

LEGEND

- STREET CENTER LINE
- PROPOSED PROPERTY LINE
- EXISTING RIGHT-OF-WAY
- DRAINAGE AREA BOUNDARY
- FLOW PATH
- PROPOSED BUILDING OUTLINE.
- 1A / 0.656 AC — AREA DESIGNATION AND ACREAGE
- HARDSCAPE AREA

GENERAL NOTES:

1. STENCIL AT ALL DRAINAGE INLETS (I.E. CATCH BASINS, TRENCH DRAINS). STENCIL PER DETAIL 1 HEREON.

DETAIL 1: DRAINAGE INLET STENCIL
NOT TO SCALE

NOT FOR CONSTRUCTION

10.AUG.2021

ba
belzberg architects
2321 MAIN STREET
SANTA MONICA, CA 90405
310.453.9611
www.belzbergarchitects.com

CONSULTANT:

PSOMAS
555 S. Flower Street, Ste 4300
Los Angeles, CA 90071
t +213.223.1400
www.psomas.com

#	DESCRIPTION	DATE

HOLOCAUST MUSEUM LA EXPANSION

100 THE GROVE DRIVE
LOS ANGELES, CA 90036

LOW IMPACT DEVELOPMENT PLAN

PROJECT NUMBER: 17009

C140

12/17/2020 12:48:20 AM

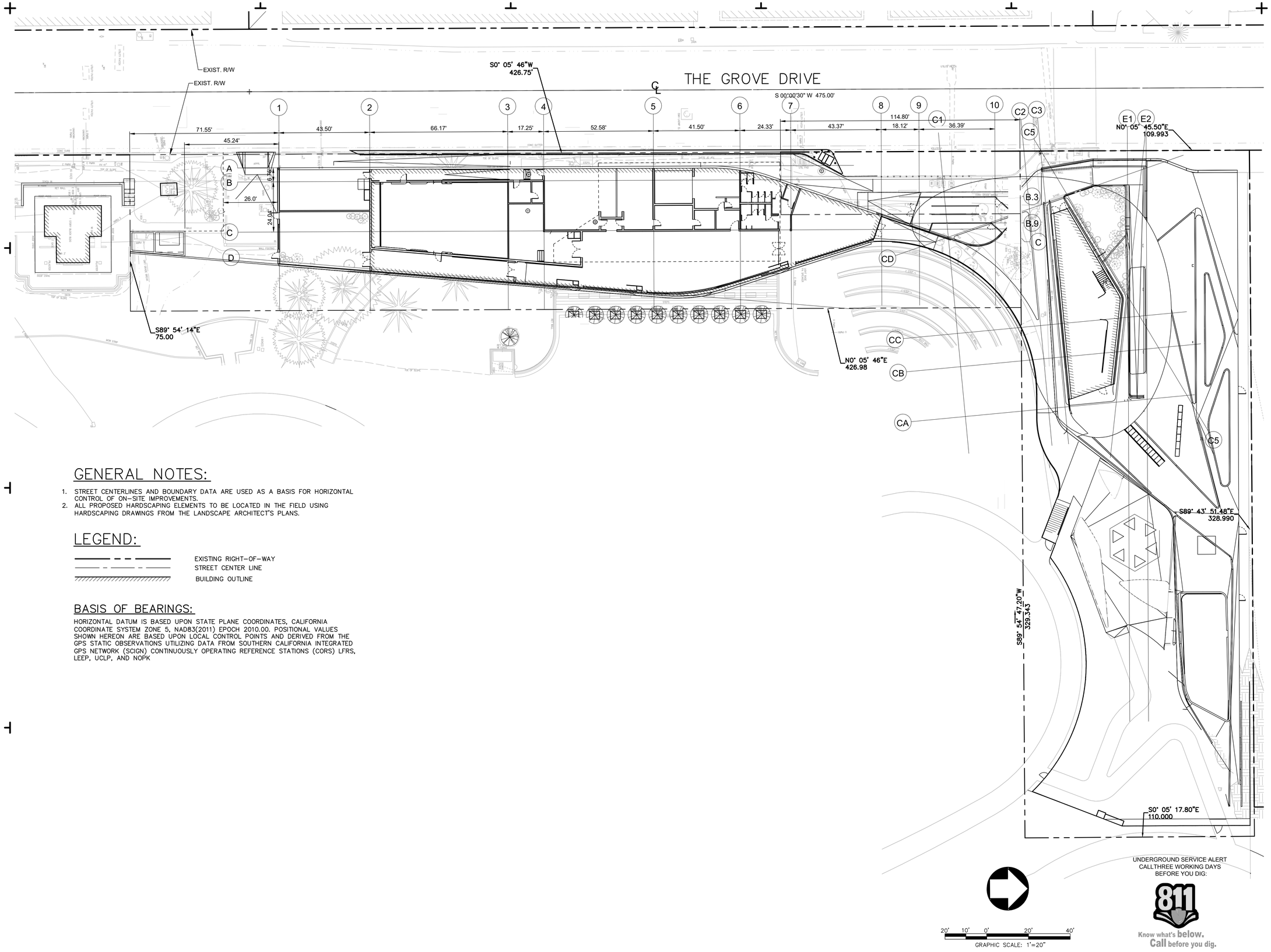

GENERAL NOTES:

1. STREET CENTERLINES AND BOUNDARY DATA ARE USED AS A BASIS FOR HORIZONTAL CONTROL OF ON-SITE IMPROVEMENTS.
2. ALL PROPOSED HARDSCAPING ELEMENTS TO BE LOCATED IN THE FIELD USING HARDSCAPING DRAWINGS FROM THE LANDSCAPE ARCHITECT'S PLANS.

LEGEND:

EXISTING RIGHT-OF-WAY
STREET CENTER LINE
BUILDING OUTLINE

BASIS OF BEARINGS:

HORIZONTAL DATUM IS BASED UPON STATE PLANE COORDINATES, CALIFORNIA COORDINATE SYSTEM ZONE 5, NAD83(2011) EPOCH 2010.00. POSITIONAL VALUES SHOWN HEREON ARE BASED UPON LOCAL CONTROL POINTS AND DERIVED FROM THE GPS STATIC OBSERVATIONS UTILIZING DATA FROM SOUTHERN CALIFORNIA INTEGRATED GPS NETWORK (SCIGN) CONTINUOUSLY OPERATING REFERENCE STATIONS (CORS) LFRS, LEEP, UCLP, AND NOPK

UNDERGROUND SERVICE ALERT
CALLTHREE WORKING DAYS
BEFORE YOU DIG:
811
Know what's below.
Call before you dig.

NOT FOR CONSTRUCTION

10.AUG.2021

belzberg architects
2321 MAIN STREET
SANTA MONICA, CA 90405
310.453.9611
www.belzbergarchitects.com

CONSULTANT:

PSOMAS
555 S. Flower Street, Ste 4300
Los Angeles, CA 90071
t +213.223.1400
www.psomas.com

#	DESCRIPTION	DATE

HOLOCAUST MUSEUM LA EXPANSION

100 THE GROVE DRIVE
LOS ANGELES, CA 90036

HORIZONTAL CONTROL PLAN

PROJECT NUMBER: 17009

C150

12/17/2020 12:49:20 AM

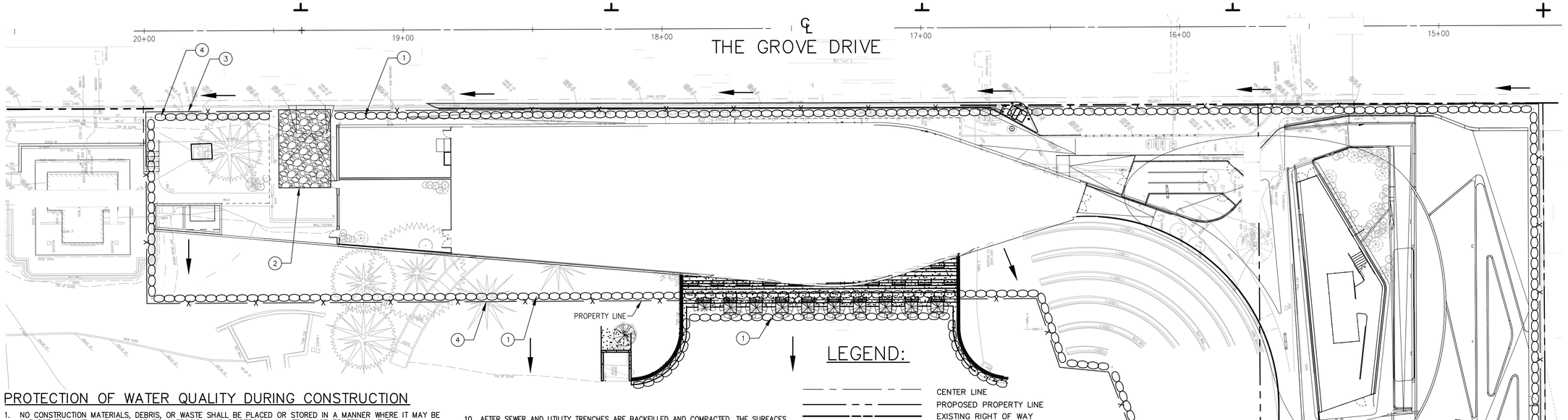

PROTECTION OF WATER QUALITY DURING CONSTRUCTION

1. NO CONSTRUCTION MATERIALS, DEBRIS, OR WASTE SHALL BE PLACED OR STORED IN A MANNER WHERE IT MAY BE SUBJECT TO WAVE, WIND, RAIN, OR TIDAL EROSION AND DISPERSION. ALL TRASH GENERATED ON THE CONSTRUCTION SITE SHALL BE PROPERLY DISPOSED OF AT THE END OF EACH CONSTRUCTION DAY.
2. ANY AND ALL DEBRIS AND EXCESS SOIL OR SAND RESULTING FROM EXCAVATION AND CONSTRUCTION ACTIVITIES SHALL BE REMOVED FROM THE PROJECT SITE WITHIN 72 HOURS OF COMPLETION OF EXCAVATION OR CONSTRUCTION. EXCAVATION AND CONSTRUCTION DEBRIS AND SEDIMENT SHALL BE REMOVED OR CONTAINED AND SECURED FROM WORK AREAS EACH DAY THAT EXCAVATION AND CONSTRUCTION OCCURS TO PREVENT THE ACCUMULATION OF SEDIMENT AND OTHER DEBRIS THAT COULD BE DISCHARGED INTO COASTAL WATERS. ALL EXCAVATION AND CONSTRUCTION DEBRIS AND OTHER WASTE MATERIALS REMOVED FROM THE PROJECT SITE SHALL BE DISPOSED OF OR RECYCLED IN COMPLIANCE WITH ALL LOCAL, STATE AND FEDERAL REGULATIONS. NO DEBRIS SHALL BE PLACED IN COASTAL WATERS. IF A DISPOSAL SITE IS LOCATED IN THE COASTAL ZONE, A COASTAL DEVELOPMENT PERMIT OR AN AMENDMENT TO THIS PERMIT SHALL BE REQUIRED BEFORE DISPOSAL CAN TAKE PLACE.
3. EROSION CONTROL/SEDIMENTATION BEST MANAGEMENT PRACTICES (BMPs) SHALL BE USED TO CONTROL DUST AND SEDIMENTATION IMPACTS TO COASTAL WATERS DURING CONSTRUCTION AND DEMOLITION ACTIVITIES. BMPs SHALL INCLUDE, BUT ARE NOT LIMITED TO; PLACEMENT OF SAND BAGS AROUND DRAINAGE INLETS TO PREVENT RUNOFF/SEDIMENT TRANSPORT INTO THE STORM DRAIN SYSTEM AND THE PACIFIC OCEAN.
4. ALL CONSTRUCTION MATERIALS, EXCLUDING LUMBER SHALL BE COVERED AND ENCLOSED ON ALL SIDES, AND KEPT AS FAR AWAY FROM STORM DRAIN INLETS AND RECEIVING WATERS POSSIBLE.
5. DURING EXCAVATION AND CONSTRUCTION OF THE PROPOSED PROJECT, NO RUNOFF, SITE DRAINAGE OR WATERING SHALL BE DIRECTED FROM THE SITE INTO ANY STREET OR DRAIN THAT DISCHARGES INTO THE BEACH OR OCEAN, UNLESS SUCH DISCHARGE SPECIFICALLY AUTHORIZED BY THE CALIFORNIA REGIONAL WATER QUALITY CONTROL BOARD.
6. IN THE EVENT THAT LEAD-CONTAMINATED SOILS OR OTHER TOXINS OR CONTAMINATED MATERIAL ARE DISCOVERED ON THE SITE, SUCH MATTER SHALL BE STOCKPILED AND TRANSPORTED OFF-SITE ONLY IN ACCORDANCE WITH DEPARTMENT OF TOXIC SUBSTANCES CONTROL (DTSC) RULES AND /OR REGIONAL WATER QUALITY CONTROL BOARD (RWQCB) REGULATIONS.

THE APPLICANT SHALL:

7. DEVELOP AND IMPLEMENT SPILL PREVENTION AND CONTROL MEASURES AND SHALL ENSURE THE PROPER HANDLING, STORAGE, AND APPLICATION OF PETROLEUM PRODUCTS AND OTHER CONSTRUCTION MATERIALS. THESE SHALL INCLUDE A DESIGNATED FUELING AND VEHICLE MAINTENANCE AREA WITH APPROPRIATE BERMS AND PROTECTION TO PREVENT ANY SPILLAGE OF GASOLINE OR RELATED PETROLEUM PRODUCTS OR CONTACT WITH RUNOFF. IT SHALL BE LOCATED AS FAR AWAY FROM THE RECEIVING WATERS AND STORM DRAIN INLETS AS POSSIBLE.
8. MAINTAIN AND WASH EQUIPMENT AND MACHINERY IN CONFINED AREAS SPECIFICALLY DESIGNED TO CONTROL RUNOFF. THINNERS OR SOLVENTS SHALL NOT BE DISCHARGED INTO SANITARY OR STORM SEWER SYSTEMS. WASHOUT FROM CONCRETE TRUCKS SHALL BE DISPOSED OF AT A CONTROLLED LOCATION NOT SUBJECT TO RUNOFF INTO COASTAL WATERS, AND MORE THAN FIFTY FEET AWAY FROM A STORM DRAIN, OPEN DITCH OR SURFACE WATERS.
9. PROVIDE AN MAINTAIN ADEQUATE DISPOSAL FACILITIES FOR SOLID WASTE, INCLUDING EXCESS CONCRETE, PRODUCED DURING CONSTRUCTION.
10. PROVIDE AND MAINTAIN TEMPORARY SEDIMENT BASINS (INCLUDING DEBRIS BASINS, DESILTING BASINS OR SILT TRAPS), TEMPORARY DRAINS AND SWALES, SAND BAG BARRIERS, WIND BARRIERS SUCH AS SOLID BOARD FENCE, SNOW FENCES, OR HAY BALES AND SILT FENCING.
11. STABILIZE ANY STOCKPILED FILL WITH GEOFABRIC COVERS OR OTHER APPROPRIATE COVER, AND CLOSE AND STABILIZE OPEN TRENCHES AS SOON AS POSSIBLE.
12. IMPLEMENT THE APPROVED CONSTRUCTION BEST MANAGEMENT PRACTICES PLAN ON THE PROJECT SITES PRIOR TO AND CONCURRENT WITH THE EXCAVATION AND CONSTRUCTION OPERATIONS. THE BMPs SHALL BE MAINTAINED THROUGHOUT THE DEVELOPMENT PROCESS.

TYPICAL EROSION CONTROL NOTES:
STORM WATER POLLUTION EROSION CONTROL PLAN NOTES:

1. IN CASE OF EMERGENCY, CALL AT
2. TEMPORARY EROSION CONTROL DEVICES SHOWN ON THE GRADING PLAN WHICH INTERFERE WITH THE WORK SHALL BE RELOCATED OR MODIFIED AS AND WHEN THE INSPECTOR SO DIRECTS AS THE WORK PROGRESSES.
3. ALL LOOSE SOIL AND DEBRIS SHALL BE REMOVED FROM THE STREET AREAS UPON STARTING OPERATIONS AND PERIODICALLY THEREAFTER AS DIRECTED BY THE INSPECTOR.
4. WHEN THE INSPECTOR SO DIRECTS, A 12-INCH BERM SHALL BE MAINTAINED ALONG
5. A.) VELOCITY CHECK DAMS SHALL BE PROVIDED ACROSS THE OUTLETS OF ALL LOTS DRAINING INTO THE STREET.
6. STAND-BY CREWS SHALL BE ALERTED BY THE PERMITTEE OR CONTRACTOR FOR EMERGENCY WORK DURING RAINSTORMS.
7. ALL UTILITY TRENCHES SHALL BE BLOCKED AT THE PRESCRIBED INTERVALS FROM BOTTOM TO TOP WITH A DOUBLE ROW OF SANDBAGS PRIOR TO BACKFILL. SEWER TRENCHES SHALL BE BLOCKED AT THE PRESCRIBED INTERVALS WITH A DOUBLE ROW OF SANDBAGS EXTENDING DOWNWARD, TWO SANDBAGS FROM THE GRADED SURFACE OF THE STREET. SANDBAGS ARE TO BE PLACED WITH ALTERNATE HEADER AND STRETCHER COURSES. THE INTERVALS PRESCRIBED BETWEEN SANDBAG BLOCKING SHALL DEPEND ON THE SLOPE OF THE GROUND SURFACE, BUT SHALL NOT EXCEED THE FOLLOWING:

GRADE OF THE STREET	INTERVAL
LESS THAN 2%	AS REQUIRED
2% TO 4%	100 FEET
4% TO 10%	50 FEET
OVER 10%	25 FEET

8. VELOCITY CHECK DAMS SHALL BE PROVIDED IN ALL UNPAVED STREET AREAS AT THE INTERVALS INDICATED ABOVE. VELOCITY CHECK DAMS MAY BE CONSTRUCTED OF SANDBAGS, TIMBER, OR OTHER EROSION-RESISTANT MATERIALS APPROVED BY THE INSPECTOR, AND SHALL EXTEND COMPLETELY ACROSS THE STREET OR CHANNEL AT RIGHT ANGLES TO THE CENTERLINE. EARTH DIKES MAY NOT BE USED AS VELOCITY CHECK DAMS.
9. VELOCITY CHECK DAMS SHALL BE PROVIDED IN ALL UNPAVED GRADED CHANNELS AT THE INTERVALS INDICATED BELOW.

GRADE OF CHANNEL	INTERVALS BETWEEN CHECK DAMS
LESS THAN 3%	100 FEET
3% TO 6%	50 FEET
OVER 6%	25 FEET

10. AFTER SEWER AND UTILITY TRENCHES ARE BACKFILLED AND COMPACTED, THE SURFACES OVER SUCH TRENCHES SHALL BE MOUNDED SLIGHTLY TO PREVENT CHANNELING OF WATER IN THE TRENCH AREA. CARE SHOULD BE EXERCISED TO PROVIDE FOR CROSS FLOW AT
11. EXCEPT WHEN THE INSPECTOR DIRECTS OTHERWISE, ALL DEVICES SHOWN SHALL BE IN PLACE AT THE END OF EACH WORKING DAY WHEN RAIN IS FORECAST, AND SHALL BE MAINTAINED DURING THE RAINY SEASON (OCTOBER 15 TO APRIL 15).
12. ALL BASINS AND CHECK DAMS SHALL HAVE THE DEBRIS AND SILT REMOVED AFTER EACH STORM TO RESTORE THEIR CAPACITY.
13. SANDBAGS SHALL BE STOCKPILED IN PARKWAY, READY TO BE PLACED IN POSITION WHEN RAIN IS FORECAST, OR WHEN THE INSPECTOR SO DIRECTS.
14. BRUSH AND GROUND COVER MAY NOT BE REMOVED MORE THAN 10 FEET ABOVE FILLS BETWEEN OCTOBER 15 AND APRIL 15.
15. PROVIDE A PLASTIC COVER OVER THE SLOPE. PLACE SANDBAGS ON TOP OF PLASTIC TO PREVENT THE PLASTIC COVER FROM MOVING AS DIRECTED BY THE INSPECTOR.
16. THE CONTRACTOR SHALL IMPLEMENT ADDITIONAL EROSION CONTROL MEASURES AS REQUIRED BY THE GRADING INSPECTOR.

STORM WATER POLLUTION CONTROL REQUIREMENT FOR GRADING PROJECTS, SITE CONSTRUCTION AND EROSION CONTROL PLANS:

BEST MANAGEMENT PRACTICES FOR CONSTRUCTION ACTIVITIES*

A. THE FOLLOWING IS INTENDED AS AN ATTACHMENT FOR CONSTRUCTION AND GRADING PLANS AND REPRESENTS THE MINIMUM STANDARDS OF GOOD HOUSEKEEPING WHICH MUST BE IMPLEMENTED TO ALL CONSTRUCTION SITES REGARDLESS OF SIZE.

ERODED SEDIMENTS AND OTHER POLLUTANTS MUST BE RETAINED ON SITE AND MAY NOT BE TRANSPORTED FROM THE SITE VIA SHEETFLOW, SWALES, AREA DRAINS, NATURAL DRAINAGE COURSES OR WIND.

STOCKPILES OF EARTH AND OTHER CONSTRUCTION RELATED MATERIALS MUST BE PROTECTED FROM BEING TRANSPORTED FROM THE SITE BY THE FORCES OF WIND OR WATER.

FUELS, OILS, SOLVENTS AND OTHER TOXIC MATERIALS MUST BE STORED IN ACCORDANCE WITH THEIR LISTING AND ARE NOT TO CONTAMINATE THE SOIL AND SURFACE WATERS. ALL APPROVED STORAGE CONTAINERS ARE TO BE PROTECTED FROM THE WEATHER. SPILLS MUST BE CLEANED UP IMMEDIATELY AND DISPOSED OF IN A PROPER MANNER. SPILLS MAY NOT BE WASHED INTO THE DRAINAGE SYSTEM.

EXCESS OR WASTE CONCRETE MAY NOT BE WASHED INTO THE PUBLIC WAY OR ANY OTHER DRAINAGE SYSTEM. PROVISIONS SHALL BE MADE TO RETAIN CONCRETE WASTES ON SITE UNTIL THEY CAN BE DISPOSED OF AS SOLID WASTE.

TRASH AND CONSTRUCTION RELATED SOLID WASTES MUST BE DEPOSITED INTO A COVERED RECEPTACLE TO PREVENT CONTAMINATION OF RAINWATER AND DISPERSAL BY WIND.

SEDIMENTS AND OTHER MATERIALS MAY NOT BE TRACKED FROM THE SITE BY VEHICLE TRAFFIC. THE CONSTRUCTION ENTRANCE ROADWAYS MUST BE STABILIZED SO AS TO INHIBIT SEDIMENTS FROM BEING DEPOSITED INTO THE PUBLIC WAY. ACCIDENTAL DEPOSITIONS MUST BE SWEPT UP IMMEDIATELY AND MAY NOT BE WASHED DOWN BY RAIN OR OTHER MEANS.

ANY SLOPES WITH DISTURBED SOILS OR DENUDED OF VEGETATION MUST BE STABILIZED SO AS TO INHIBIT EROSION BY WIND AND WATER.

* THE ABOVE BEST MANAGEMENT PRACTICES ARE DETAILED IN THE CALIFORNIA STORM WATER BEST MANAGEMENT PRACTICES, CONSTRUCTION HANDBOOK. JULY 2012

B. THE FOLLOWING BMPS AS OUTLINED IN, BUT NOT LIMITED TO, THE CALIFORNIA STORMWATER QUALITY ASSOCIATION BEST MANAGEMENT PRACTICE CONSTRUCTION HANDBOOK, THE LATEST REVISED EDITION, MAY APPLY DURING CONSTRUCTION (ADDITIONAL MEASURES MAY BE REQUIRED IF DEEMED APPROPRIATE BY COUNTY):

C. SECTION 2 OF THE CSQA BMP CONSTRUCTION HANDBOOK, JAN 2003 IS PART OF THESE EROSION CONTROL PLANS, INCLUDING BUT NOT LIMITED TO:
- -MINIMUM REQUIREMENTS,
- -GOOD HOUSEKEEPING PRACTICES,
- -STAFF TRAINING,
- -SITE INSPECTIONS,
- -BMP MONITORING AND MAINTENANCE,
- -STORMWATER POLLUTION CONTROL DOCUMENTATION.

NS-3 – PAVING AND GRINDING OPERATIONS
NS-8 – VEHICLE AND EQUIPMENT CLEANING
NS-9 – VEHICLE AND EQUIPMENT FUELING
NS-10 – VEHICLE AND EQUIPMENT MAINTENANCE
NS-11 – DRIVING OPERATIONS
NS-12 – CONCRETE CURING
NS-13 – CONCRETE FINISHING
WM-1 – MATERIAL DELIVERY AND STORAGE
WM-2 – MATERIAL USE
WM-3 – STOCKPILE MANAGEMENT
WM-4 – SPILL PREVENTION AND CONTROL
WM-5 – SOLID WASTE MANAGEMENT
WM-8 – CONCRETE WASTE MANAGEMENT
WM-9 – SANITARY/SEPTIC WASTE MANAGEMENT

EC-1 – SCHEDULING
SE-3 – SEDIMENT TRAP
SE-6 – GRAVEL BAG BERM
SE-7 – STREET SWEEPING AND VACUUMING
SE-10 – STORM DRAIN INLET PROTECTION
TC-1 – STABILIZED CONSTRUCTION ENTRANCE/EXIT
TC-2 – STABILIZED CONSTRUCTION ROADWAY AS REQUIRED
TC-3 – ENTRANCE/ OUTLET TIRE WASH
WE-1 – WIND EROSION CONTROL

LEGEND:

- CENTER LINE
- PROPOSED PROPERTY LINE
- EXISTING RIGHT OF WAY
- FLOW DIRECTION
- SAND BAGS
- SILT FENCE

EROSION CONTROL CONSTRUCTION NOTES:

1. INSTALL GRAVEL BAG BERM PER SE-6. ALSO SEE DETAIL 1 HEREON.
2. PROJECT SITE STABILIZED CONSTRUCTION ENTRANCE/EXIT PER TC-1. ALSO SEE DETAIL 3 HEREON.
3. INSTALL STORM DRAIN INLET PROTECTION PER BMP SE-10.
4. INSTALL SILT FENCE PER SE-1. ALSO SEE DETAIL 2 HEREON.
5. IMPLEMENT STAGING AREA PER NS-8 VEHICLE AND EQUIPMENT CLEANING, NS-9 VEHICLE AND EQUIPMENT FUELING, NS-10 VEHICLE AND EQUIPMENT MAINTENANCE, WM-1 MATERIAL DELIVERY AND STORAGE. PRIOR TO MATERIAL DELIVERY AND VEHICLE STORAGE. CONTRACTOR TO ADJUST LOCATION OF AREAS ON-SITE AS NEEDED.

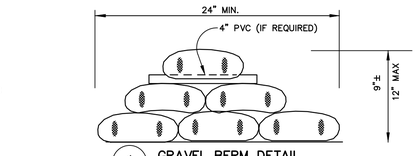

1 GRAVEL BERM DETAIL
NOT TO SCALE

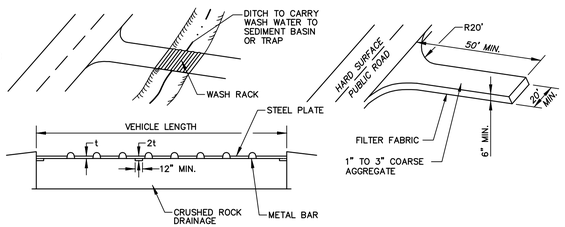

WASH RACK (SCHEMATIC)

2 STABILIZED CONSTRUCTION ENTRANCE AND WASH RACK
(BEST MANAGEMENT PRACTICES ESC24)
NOT TO SCALE

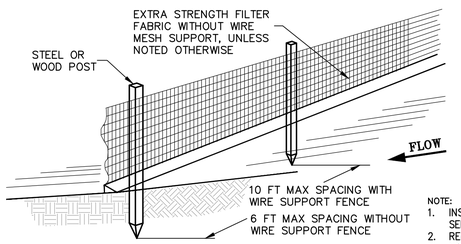

3 SILT FENCE DETAIL
NOT TO SCALE

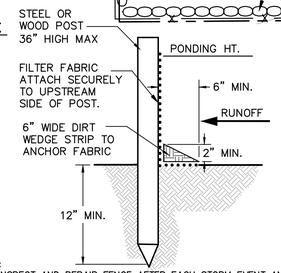

NOTE:
1. INSPECT AND REPAIR FENCE AFTER EACH STORM EVENT AND REMOVE SEDIMENT WHEN NECESSARY.
2. REMOVED SEDIMENT SHALL BE DEPOSITED TO AN AREA THAT WILL NOT CONTRIBUTE SEDIMENT OFF-SITE AND CAN BE PERMANENTLY STABILIZED.
3. SILT FENCE SHALL BE PLACED ON SLOPE CONTOURS TO MAXIMIZE PONDING EFFICIENCY.

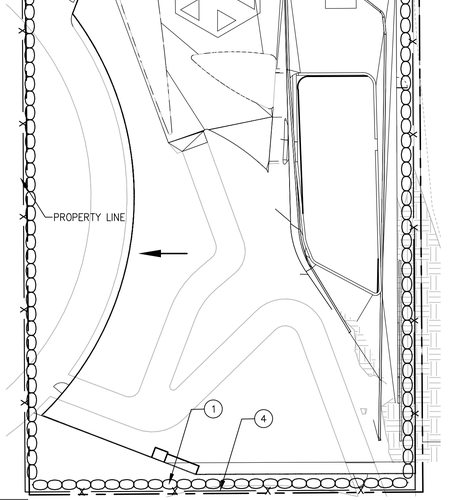

20' 10' 0' 20' 40'
GRAPHIC SCALE: 1"=20"

UNDERGROUND SERVICE ALERT
CALLTHREE WORKING DAYS
BEFORE YOU DIG:
811
Know what's below.
Call before you dig.

NOT FOR CONSTRUCTION

10.AUG.2021

ba
belzberg architects
2321 MAIN STREET
SANTA MONICA, CA 90405
310.453.9611
www.belzbergarchitects.com
CONSULTANT:
PSOMAS
555 S. Flower Street, Ste 4300
Los Angeles, CA 90071
t +213.223.1400
www.psomas.com

#	DESCRIPTION	DATE

HOLOCAUST MUSEUM LA EXPANSION

100 THE GROVE DRIVE
LOS ANGELES, CA 90036

EROSION CONTROL PLAN

PROJECT NUMBER: 17009

C160

12/17/2020 12:49:20 AM

HOLOCAUST MUSEUM LA EXPANSION

100% LANDSCAPE DESIGN DEVELOPMENT

100 THE GROVE DRIVE
LOS ANGELES, CA 90036

OWNER/CLIENT
LOS ANGELES MUSEUM OF THE HOLOCAUST
100 THE GROVE DRIVE
LOS ANGELES, CA 90036

PHONE: 323.651.3704
CONTACT: LISA BARNETT,
DIRECTOR OF OPERATIONS

ARCHITECT
BELZBERG ARCHITECTS
2321 MAIN STREET
SANTA MONICA, CA 90405

PHONE: 310.453.9611
CONTACT: DAVID CHEUNG

LANDSCAPE ARCHITECT
STUDIO-MLA
251 S. MISSION RD.
LOS ANGELES, CA. 90033

PHONE: 213.384.3844
CONTACT: ERIC MARECKI
MATT LYSNE

CIVIL ENGINEER
PSOMAS
555 FLOWER ST #4300
LOS ANGELES, CA 90071

PHONE: 213.223.1436
CONTACT: DAVID CURTIS
ALISHA FLORES

STRUCTURAL ENGINEER
ARUP
900 WILSHIRE BLVD 19TH FLOOR
LOS ANGELES, CA. 90017

PHONE: 310.578.4549
CONTACT: FRANK FREUDENBERGER,
PROJECT MANAGER

LIGHTING DESIGNER
ARUP
900 WILSHIRE BLVD 19TH FLOOR
LOS ANGELES, CA. 90017

PHONE: 310.578.4549
CONTACT: DAN FOREMAN

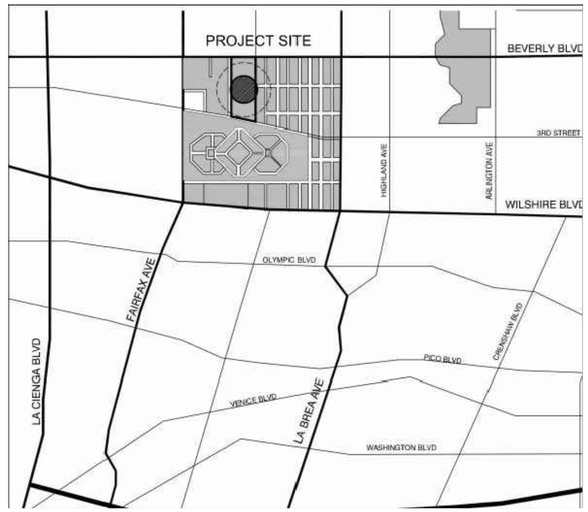

VICINITY MAP
N.T.S

NOT FOR CONSTRUCTION

18.DEC.2020

belzberg architects
2321 MAIN STREET
SANTA MONICA, CA 90405
310.453.9611

www.belzbergarchitects.com

STUDIO-MLA
251 South Mission Road
Los Angeles, California 90033
T. 213 384 3844 studio-mla.com

#	DESCRIPTION	DATE
	25% DD PROGRESS	1/29/21

HOLOCAUST
MUSEUM LA
EXPANSION

100 THE GROVE DRIVE
LOS ANGELES, CA 90036

COVER SHEET

PROJECT NUMBER: 17009

L000

12/17/2020 12:48:20 AM

ABBREVIATIONS

&	AND
@	AT
#	NUMBER
%	PERCENT
A.C.	ASPHALTIC CONCRETE
AD	AREA DRAIN
ADJ.	ADJACENT
AM	APICAL MERISTEM
ARCH.	ARCHITECTURE
ASTM	AMERICAN SOCIETY OF TESTING & MATERIALS
BC	BOTTOM OF CURB
BCR	BEGIN CURB RADIUS
BLDG.	BUILDING
BS	BOTTOM OF STEP
BTH	BROWN TRUNK HEIGHT
BW	BOTTOM OF WALL
C.I.P.	CAST IN PLACE
C.J.	CONSTRUCTION JOINT
CL	CENTER LINE
CLR	CLEAR
CMB	CRUSHED MISCELLANEOUS BASE
CMU	CONCRETE MASONRY UNIT
CONC.	CONCRETE
CONT.	CONTINUOUS
CORP.	CORPORATION
d	PENNY (NAIL SIZE)
D.G.	DECOMPOSED GRANITE
D.I.	DRAIN INLET
D,DIA.	DIAMETER
DWGS.	DRAWINGS
(E)	EXISTING
EA.	EACH
E.J.	EXPANSION JOINT
EX.	EXISTING
ETC.	ETCETERA
E.W.	EACH WAY
F.D.C.	FIRE DEPARTMENT CONNECTIONS
FFE	FINISH FLOOR ELEVATION
FF	FINISH FLOOR
FG	FINISH GRADE
FIN.	FINISH
FS	FINISH SURFACE
FTG.	FOOTING
GALV.	GALVANIZED
H.B.	HEADEBOARD
H,HT.	HEIGHT
HOR.	HORIZONTAL, HORIZONTALLY
HP	HIGH POINT
L	LENGTH
LB.	POUND
L.F.	LINEAR FEET
L.O.W.	LIMIT OF WORK
LP	LOW POINT
MAX.	MAXIMUM
M.E.P.	MECHANICAL, ELECTRICAL, PLUMBING
MIN.	MINIMUM
(N)	NEW
NAT.	NATURAL
N.I.C.	NOT IN CONTRACT
N.T.S.	NOT TO SCALE
O.C.	ON CENTER
O.D.	OUTSIDE DIAMETER
OF/CI	OWNER FURNISHED/CONTRACTOR INSTALLED
P.A., PA	PLANTING AREA
P.O.B.	POINT OF BEGINNING
PP	POWER POLE
PL	PROPERTY LINE
PT	PRESSURE TREATED
PVC	POLY VINYL CHLORIDE
R.	RISER
R, RAD.	RADIUS
R.C.B.	ROOT CONTROL BARRIER
REINF.	REINFORCED
REP.	REPRESENTATIVE
R.O.W.	RIGHT-OF-WAY
S.C.	SAWCUT JOINT
SCH.	SCHEDULE
SF	SQUARE FEET
SIM.	SIMILAR
S.J.	SCORE JOINT
S.L.	SCORELINE
SQ.	SQUARE
SS	STAINLESS STEEL
STD.	STANDARD
T.	TREAD
T.B.D.	TO BE DETERMINED
TC	TOP OF CURB
TF	TOP OF FOOTING
TG	TOP OF GRATE
TW	TOP OF WALL
TYP.	TYPICAL
VERT.	VERTICAL, VERTICALLY
V.I.F.	VERIFY IN FIELD
W	WIDTH
W/	WITH
WL	WATER LEVEL
W.W.M.	WELDED WIRE MESH

SYMBOLS

PROPERTY LINE

RIGHT-OF-WAY

LIMIT OF WORK LINE

MATCHLINE
REFER TO LXXX

MATCHLINE

CENTER LINE

SECTION

ELEVATION

DETAIL

ALIGN

POINT OF BEGINNING/
ORIGIN POINT OF LAYOUT

DETAIL SECTION

A-101

KEYNOTE

CALLOUT

GENERAL NOTES

1. INSTALL ALL IMPROVEMENTS IN ACCORDANCE WITH CITY OF LOS ANGELES REQUIREMENTS. IN CASE OF DISCREPANCY BETWEEN THESE PLANS AND THE CITY OF LOS ANGELES REQUIREMENTS, THE MOST STRINGENT REQUIREMENTS WILL APPLY.

2. A VISIT TO THE SITE IS REQUIRED. VERIFY ALL CONDITIONS PRIOR TO SUBMITTING A PROPOSAL OF COST FOR CONSTRUCTION.

3. THESE DRAWINGS, AS AN INSTRUMENT OF SERVICE, ARE THE PROPERTY OF THE LANDSCAPE ARCHITECT AND MAY NOT BE REPRODUCED WITHOUT THE LANDSCAPE ARCHITECT'S PERMISSION AND UNLESS THE REPRODUCTION CARRIES THE LANDSCAPE ARCHITECT'S NAME. ALL DESIGN AND OTHER INFORMATION SHOWN ON THE DRAWINGS IS FOR USE ON THE SPECIFIED PROJECT ONLY AND SHALL NOT BE USED OTHERWISE WITHOUT WRITTEN PERMISSION FROM THE LANDSCAPE ARCHITECT.

4. REVIEW THESE PLANS AND NOTES COMPLETELY. ANY DISCREPANCIES SHALL BE BROUGHT TO THE ATTENTION OF THE LANDSCAPE ARCHITECT IMMEDIATELY UPON DISCOVERY.

5. EXTRA WORK TO BE APPROVED IN WRITING BY THE OWNER PRIOR TO COMMENCEMENT OF WORK.

6. IT IS THE RESPONSIBILITY OF THE SUB-CONTRACTORS TO FAMILIARIZE THEMSELVES WITH ALL GRADE DIFFERENCES, LOCATION OF WALLS, UTILITIES, SEWERS, WATER LINES, ETC. COORDINATE WORK WITH OTHER SUB-CONTRACTORS FOR THE LOCATION AND INSTALLATION OF PIPE SLEEVES UNDER PAVING, ELECTRICAL CONNECTIONS, WATER HOOK-UPS, ETC.

7. ALL REQUIREMENTS OF THE UNIFORM BUILDING CODE SHALL APPLY TO THE WORK SPECIFIED HEREIN UNLESS OTHERWISE MODIFIED BY THESE DOCUMENTS.

8. CONTRACTOR SHALL OBTAIN ALL PERMITS REQUIRED TO COMPLETE THE WORK SPECIFIED PRIOR TO COMMENCEMENT OF WORK.

9. BEFORE COMMENCING ANY WORK, OBTAIN AN UNDERGROUND SERVICE I.D. BY CALLING DIG- ALERT AT 1-800-422-4133 TWO (2) WORKING DAYS PRIOR TO ANY EXCAVATION.

10. CONTRACTOR TO COORDINATE A PRE-CONSTRUCTION MEETING ON SITE TWO (2) WORKING DAYS PRIOR TO START OF CONSTRUCTION. NOTIFY OWNER, LANDSCAPE ARCHITECT, AND ALL SUB-CONTRACTORS.

11. SUBMIT REQUESTS FOR MEETINGS, OBSERVATIONS, AND APPROVALS BY THE LANDSCAPE ARCHITECT TWO (2) WORKING DAYS PRIOR TO THE DATE AND TIME PROPOSED.

12. SHOP DRAWINGS MUST BE SUBMITTED TO THE LANDSCAPE ARCHITECT FOR REVIEW AND APPROVAL PRIOR TO PROCEEDING WITH FABRICATION.

13. OBTAIN CITY OF LOS ANGELES INSPECTOR'S AND LANDSCAPE ARCHITECT'S REVIEW AND APPROVAL OF WORK IN PROGRESS AT VARIOUS TIMES DURING CONSTRUCTION. THE FOLLOWING REVIEWS/MEETINGS ARE MANDATORY. PROVIDE TWO (2) WORKING DAYS NOTICE FOR EACH REQUESTED VISIT.
    - *PRE-JOB CONFERENCE
    - *CONSTRUCTION STAKING
    - *MAIN LINE PRESSURE TEST AND TRENCH DEPTHS PRIOR TO BACKFILL OF TRENCHES
    - *COVERAGE TEST UPON COMPLETION OF SPRINKLER INSTALLATION
    - *FINAL GRADING REVIEW
    - *PLANT MATERIAL LOCATION REVIEW
    - *PLANT MATERIAL APPEARANCE AND QUALITY REVIEW
    - *SOIL PREPARATION AND PLANTING INSTALLATION METHODS
    - *FINAL WALK THROUGH (AT COMPLETION OF PLANTING INSTALLATION)
    - *FINAL WALK THROUGH (AT COMPLETION OF MAINTENANCE PERIOD)

14. IF NOT NOTED IN THESE PLANS, CONTRACTOR TO INSTALL ALL PRODUCTS PER MANUFACTURER'S INSTALLATION/RECOMMENDATIONS.

DIRECT ANY QUESTIONS REGARDING THESE PLANS TO :
STUDIO-MLA
251 S. MISSION RD.
LOS ANGELES, CA 90033
213-384-3844

ATTN: MATT LYSNE
ERIC MARECKI

SHEET INDEX

LEGEND

SHEET NOT ISSUED	
ISSUED FOR INFORMATION AND COORDINATION	●
SHEET DELETED	⌀
SHEET SCOPE COMPLETED PREVIOUSLY	□

		100% DESIGN DOCUMENTS
L000	COVER SHEET	●
L001	GENERAL NOTES & SHEET INDEX	●
L002	CONTEXT PLAN	●
L003	OVERALL REFERENCE PLAN	●
L004	PROJECT KEY PLAN	●
L101	TREE DISPOSITION PLAN	●
L102	TREE DISPOSITION PLAN	●
L200	CONSTRUCTION NOTES & SCHEDULE	●
L201	CONSTRUCTION PLAN	●
L202	CONSTRUCTION PLAN	●
L203	CONSTRUCTION PLAN	●
L204	CONSTRUCTION PLAN	●
L300	LAYOUT NOTES & SCHEDULE	
L301	LAYOUT PLAN	
L302	LAYOUT PLAN	
L303	LAYOUT PLAN	
L034	LAYOUT PLAN	
L401	ENLARGEMENT PLAN	●
L501	ELEVATIONS & SECTIONS	●
L502	ELEVATIONS & SECTIONS	●
L503	ELEVATIONS & SECTIONS	●
L504	ELEVATIONS & SECTIONS	●
L601	CONSTRUCTION DETAILS - PAVING & EDGING	●
L602	CONSTRUCTION DETAILS - PAVING & EDGING	
L610	CONSTRUCTION DETAILS - WALLS	●
L611	CONSTRUCTION DETAILS - WALLS	●
L620	CONSTRUCTION DETAILS - FENCES, GATES, & RAILINGS	●
L621	CONSTRUCTION DETAILS - FENCES, GATES, & RAILINGS	●
L630	CONSTRUCTION DETAILS - AMENITIES	●
L631	CONSTRUCTION DETAILS - AMENITIES	
L640	CONSTRUCTION DETAILS - SITE FURNITURE	
L700A	IRRIGATION NOTES & SCHEDULE	
L700B	OVERALL IRRIGATION PLAN	
L701	IRRIGATION PLAN	
L702	IRRIGATION PLAN	
L703	IRRIGATION PLAN	
L704	IRRIGATION PLAN	
L705	IRRIGATION DETAILS	
L800A	PLANTING NOTES & SCHEDULE	●
L800B	OVERALL PLANTING PLAN	●
L801	PLANTING PLAN	●
L802	PLANTING PLAN	●
L803	PLANTING PLAN	●
L804	PLANTING PLAN	●
L805	PLANTING DETAILS	

DIAL BEFORE YOU DIG
1-800-422-4133
DIGALERT
PLAY IT SAFE. DIAL BEFORE YOU DIG!
AT LEAST TWO WORKING DAYS PRIOR TO EXCAVATING
SERVING NINE SOUTHERN CALIFORNIA COUNTIES

NOT FOR CONSTRUCTION

18.DEC.2020

ba
belzberg architects
2321 MAIN STREET
SANTA MONICA, CA 90405
310.453.9611
www.belzbergarchitects.com

STUDIO-MLA
251 South Mission Road
Los Angeles, California 90033
T. 213 384 3844 studio-mla.com

#	DESCRIPTION	DATE
25% DD PROGRESS		1/29/21

HOLOCAUST
MUSEUM LA
EXPANSION

100 THE GROVE DRIVE
LOS ANGELES, CA 90036

GENERAL NOTES
& SHEET INDEX

PROJECT NUMBER: 17009

L001

12/17/2020 12:48:20 AM

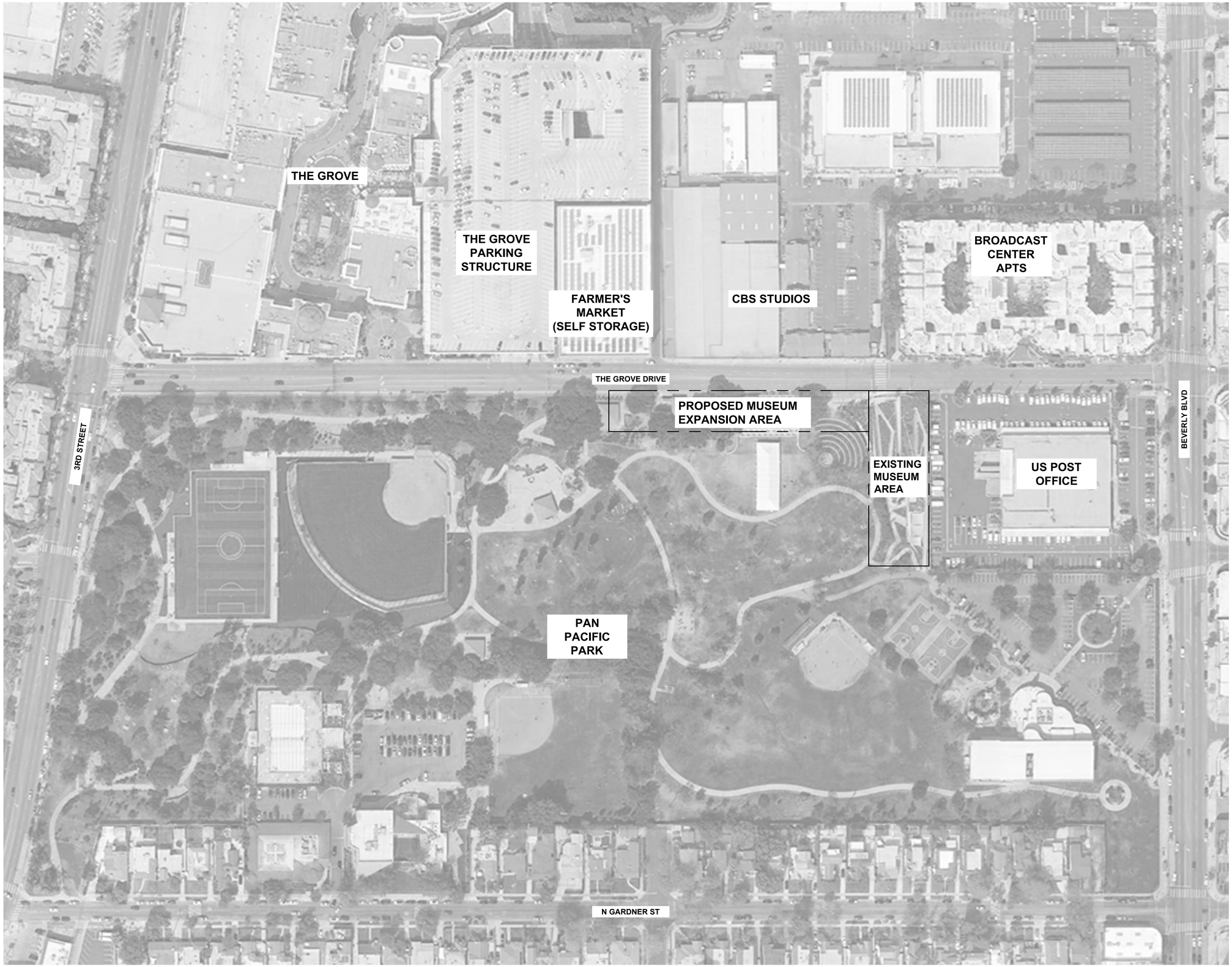

NOT FOR CONSTRUCTION

18.DEC.2020

ba
belzberg architects
2321 MAIN STREET
SANTA MONICA, CA 90405
310.453.9611
www.belzbergarchitects.com

STUDIO-MLA
251 South Mission Road
Los Angeles, California 90033
T. 213 384 3844 studio-mla.com

#	DESCRIPTION	DATE
25%	DD PROGRESS	1/29/21

HOLOCAUST MUSEUM LA EXPANSION

100 THE GROVE DRIVE
LOS ANGELES, CA 90036

VICINITY SITE PLAN

PROJECT NUMBER: 17009

L002

12/17/2020 12:49:20 AM

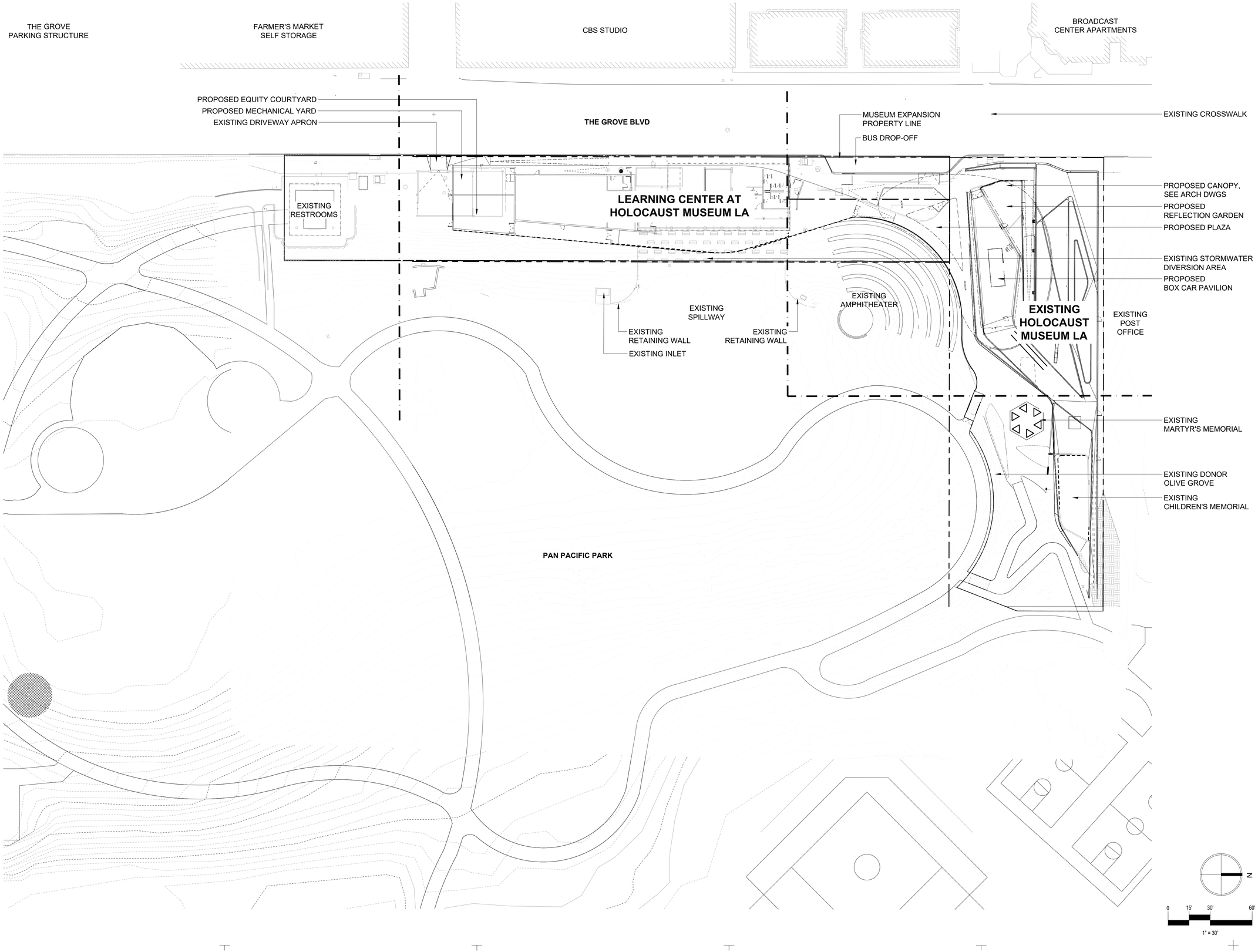

NOT FOR CONSTRUCTION

18.DEC.2020

ba
belzberg architects
2321 MAIN STREET
SANTA MONICA, CA 90405
310.453.9611
www.belzbergarchitects.com

STUDIO-MLA
251 South Mission Road
Los Angeles, California 90033
T. 213 384 3844 studio-mla.com

#	DESCRIPTION	DATE
25%	DD PROGRESS	1/29/21

HOLOCAUST
MUSEUM LA
EXPANSION

100 THE GROVE DRIVE
LOS ANGELES, CA 90036

OVERALL
SITE PLAN

PROJECT NUMBER: 17009

L003

12/17/2020 12:49:20 AM

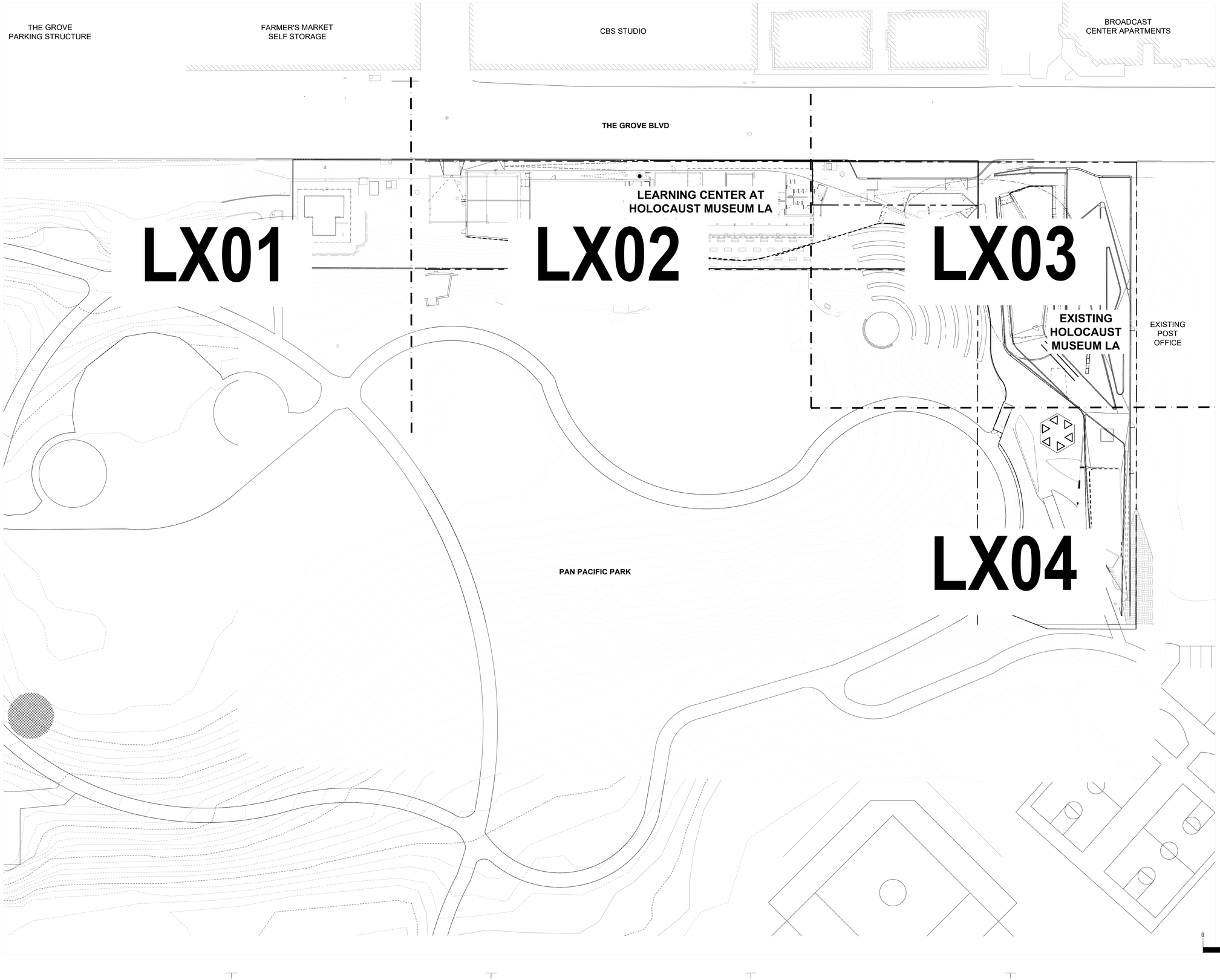

NOT FOR CONSTRUCTION

18.DEC.2020

ba
belzberg architects
2321 MAIN STREET
SANTA MONICA, CA 90405
310.453.9611
www.belzbergarchitects.com

STUDIO-MLA
251 South Mission Road
Los Angeles, California 90033
T. 213 384 3844 studio-mla.com

#	DESCRIPTION	DATE
25% DD PROGRESS		1/29/21

HOLOCAUST
MUSEUM LA
EXPANSION

100 THE GROVE DRIVE
LOS ANGELES, CA 90036

PROJECT
KEY PLAN

PROJECT NUMBER: 17009

L004

12/17/2020 12:49:20 AM

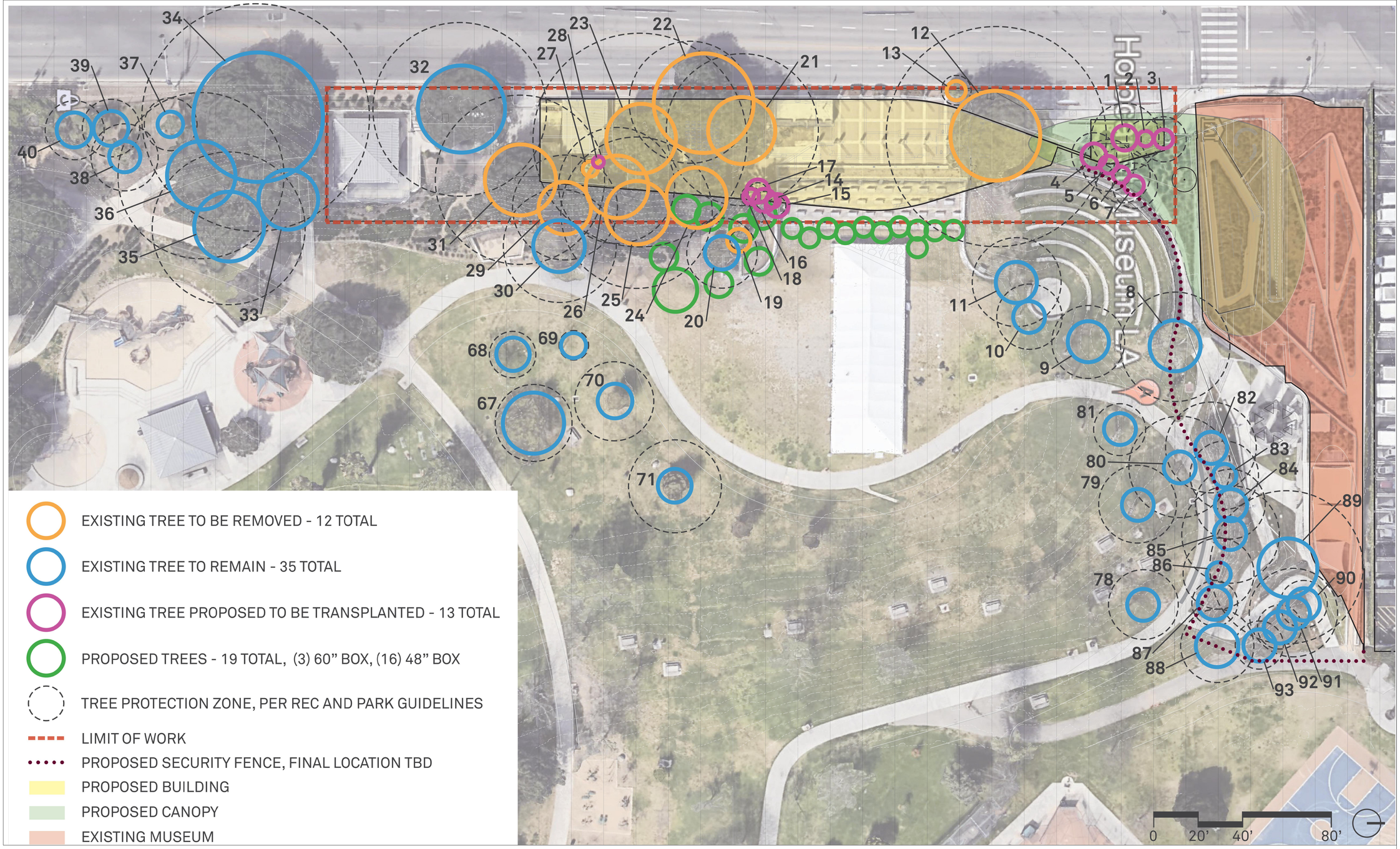

NOT FOR CONSTRUCTION

18.DEC.2020

ba
belzberg architects
2321 MAIN STREET
SANTA MONICA, CA 90405
310.453.9611
www.belzbergarchitects.com

STUDIO-MLA
251 South Mission Road
Los Angeles, California 90033
T. 213 384 3844 studio-mla.com

#	DESCRIPTION	DATE
25% DD PROGRESS		1/29/21

HOLOCAUST MUSEUM LA EXPANSION

100 THE GROVE DRIVE
LOS ANGELES, CA 90036

TREE DISPOSITION PLAN

PROJECT NUMBER: 17009

L100

12/17/2020 12:49:20 AM

IMAGES - EXISTING TREES

TREES #1-3

TREES #4-7

TREE #8

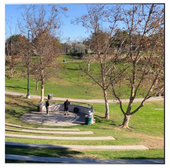
TREES #9-11

TREES #12

TREES #13

TREES #14-18

TREES #19 & 20

TREES #21, 22, & 23

TREE #22

TREES #23

TREES #24-26

TREES #28

TREES #25,26,29, & 31

TREES #79 & 80

TREES #81

TREES #82-83

TREES #84-87

NOTE: IMAGES SHOWN HERE ARE FOR REFERENCE AND DO NOT INCLUDE ALL TREES IDENTIFIED IN THE TREE INVENTORY LIST/PLAN

EXISTING TREE INVENTORY

Tree Tag #	Scientific Name	DBH (in) - 1st Trunk	DBH (in) - 2nd Trunk	Height (ft)	TPZ	Health Rating	Notes
1	*Olea europaea*	8	4.7	18	19.05	3	Future location to be determined.
2	*Olea europaea*	6.9		15	10.35	3	Future location to be determined.
3	*Olea europaea*	8.3		15	12.45	3	Future location to be determined.
4	*Olea europaea*	8.5		18	12.75	3	Future location to be determined.
5	*Olea europaea*	5	4.8	15	14.7	3	Future location to be determined.
6	*Olea europaea*	6.8	3.7	18	15.75	3	Future location to be determined.
7	*Olea europaea*	8.6		18	12.9	3	Future location to be determined.
8	*Platanus racemosa*	20.7		30	31.05	4	Existing tree is located near proposed stair. Tree Protection Zone (TPZ) extends into plaza and existing bldg. Further coordination with RAC is needed.
9	*Platanus racemosa*	13.5		25	20.25	4	
10	*Platanus racemosa*	12.2		25	18.3	4	
11	*Platanus racemosa*	16.5		25	24.75	4	
12	*Pinus eldarica*	41		40	61.5	4	
13	*Pittosporum undulatum*	7.5	3.5	10	16.5	3	
14	*Washingtonia filifera*	12		10	5	3	Future location to be determined.
15	*Washingtonia filifera*	12		20	5	3	Future location to be determined.
16	*Washingtonia filifera*	17		25	5	3	Future location to be determined.
17	*Washingtonia filifera*	16		20	5	3	Future location to be determined.
18	*Washingtonia filifera*	10		8	5	3	Future location to be determined.
19	*Washingtonia filifera*	18		25	5	3	Psomas recommends removing. Leaning on Oak
20	*Quercus agrifolia*	13.1		25	19.65	2	
21	*Pinus eldarica*	28.4		35	42.6	4	Currently being reviewed for transplanting
22	*Pinus eldarica*	22.6		35	33.9	4	Currently being reviewed for transplanting
23	*Pinus eldarica*	26.5	13.3	35	59.7	4	Currently being reviewed for transplanting
24	*Pinus eldarica*	23.1		30	34.65	4	Currently being reviewed for transplanting
25	*Pinus eldarica*	28.2		35	42.3	4	Currently being reviewed for transplanting
26	*Pinus eldarica*	21.6		25	32.4	3	Currently being reviewed for transplanting
27	*Washingtonia filifera*	16		35	5	3	
28	*Quercus agrifolia*	2.2	2.1	8	6.45	3	Future location to be determined.
29	*Pinus eldarica*	19.6		30	29.4	4	
30	*Pinus eldarica*	21.1		30	31.65	4	
31	*Pinus eldarica*	31.5		30	47.25	4	
32	*Pinus eldarica*	32.3		30	48.45	4	TPZ encroaches into building footprint. Further coordination with RAC is needed.
33	*Pinus eldarica*	36.2		45	54.3	4	
34	*Pinus eldarica*	42.5		30	63.75	3	
35	*Pinus eldarica*	28.5		40	42.75	4	
36	*Pinus eldarica*	31		35	46.5	4	
37	*Ceiba speciosa*	9.8		18	14.7	4	
38	*Ceiba speciosa*	12.5		20	18.75	4	
39	*Ceiba speciosa*	10.7		18	16.05	4	
40	*Ceiba speciosa*	11		20	16.5	4	
67	*Tipuana tipu*	14.3		25	21.45	4	
68	*Platanus racemosa*	8.7		25	13.05	4	
69	*Platanus racemosa*	5.5		15	8.25	4	
70	*Quercus suber*	14.7		25	22.05	4	
71	*Quercus suber*	17.3		25	25.95	4	
78	*Platanus racemosa*	13.3		25	19.95	3	
79	*Platanus racemosa*	14.5		25	21.75	3	
80	*Platanus racemosa*	19.1		25	28.65	3	
81	*Platanus racemosa*	9.8		25	14.7	3	
82	*Olea europaea*	9.1	7.9	25	25.5	2	Tree associated with donor plaque. Tree does not appear to be in good health. Pending further review
83	*Olea europaea*	8.7	4.1	20	19.2	2	Tree associated with donor plaque. Tree does not appear to be in good health. Pending further review
84	*Olea europaea*	13.1		25	19.65	2	Tree associated with donor plaque. Tree does not appear to be in good health. Pending further review
85	*Olea europaea*	11.2	7.1	20	27.45	2	Tree associated with donor plaque. Tree does not appear to be in good health. Pending further review
86	*Olea europaea*	7.3	6.1	18	20.1	2	Tree associated with donor plaque. Tree does not appear to be in good health. Pending further review
87	*Olea europaea*	8.5		20	12.75	2	Tree associated with donor plaque. Tree does not appear to be in good health. Pending further review
88	*Platanus racemosa*	13.7		20	20.55	4	
89	*Platanus X hispanica*	28.6		35	42.9	4	
90	*Olea europaea*	8.8		20	13.2	3	
91	*Olea europaea*	9.5	7.1	20	24.9	3	
92	*Olea europaea*	8.2		20	12.3	3	
93	*Olea europaea*	9.1		20	13.65	3	

Trees to be removed Trees to be relocated Trees to be remain

Note: Colors used in the above chart are associated with the Existing/Proposed Tree Plan (next page).

The table identifies existing trees by their Tree tag #, Scientific name, Caliper (diameter at breast height- DBH), Height, Health rating and Tree Protection Zone (TPZ) per City of Los Angeles Recreation and Parks replacement and tree protection specifications. Information within the table was provided from Psomas Exhibit 2 Tree Locations and Attachment A Tree Survey Data.

Trees that are determined to be removed are identified by the Tree Protection Zone (TPZ) encroaching into the proposed building footprint. The criteria which defines the TPZ and determination for replacement trees is included at the end of this document as provided by the City of LA Recreation and Parks department.

SUMMARY

Trees to be removed, due to potential construction conflict - 12 total
Trees proposed to be transplanted - 13 total
Proposed trees - 19 total (estimated 79" cumulative DBH total)
Note: Tree #28 (Coast Live Oak) is a Protected Species and will require a seperate replacement ratio, determined by City of LA Rec and Parks and/or Urban Forestry, sizes TBD

Cumulative DBH of trees to be removed: 302.3" total
Reduction to include proposed trees: 223.3" total

Mitigation requirements per City of LA Recreation and Parks are as follows:
Removed trees will need to be replaced by a 1:1 ratio determined by the sum of all removed tree calipers. To quantify the total number of replacement trees the following rule can be used:
- 24" box trees shall receive 2" of caliper mitigation each
- 36" box trees shall receive 3" of caliper mitigation each
- 48" box trees shall receive 4" of caliper mitigation each
- 60" box trees shall receive 5" of caliper mitigation each

Estimated quantities of replacement trees organized by tree box size are listed below. These quantities meet the cumulative DBH per tree box size. These quantites are individual totals for each tree box size, not to be interpreted as a combination to meet the requirement. However, replacement strategies can combine a mixture of tree box sizes to meet the 1:1 ratio beyond what's identified here.
- (111) 24" box trees
- (75) 36" box trees
- (59) 48" box trees
- (45) 60" box trees

CITY OF LA RECREATION AND PARKS - TREE PROTECTION SPECIFICATIONS

TREE PROTECTION SPECIFICATIONS

1.01 TREE PROTECTION

I. All trees that occur within the area of work, as shown on the plans, and not specifically designated for removal, shall be protected by the following means:

A. **Determining the Tree Protection Zone (TPZ) -** The **radius** (not the diameter) of the TPZ, measured from the outside of the tree trunk, shall be calculated by Recreation and Parks (RAP) Forestry according to the following:
1. **Single trunk trees -** multiply the trunk diameter in inches, measured 4.5' above grade, by 1.5 feet.
2. **Multi trunk trees -** multiply the sum of the diameters of all trunks in inches, measured 4.5' above grade, by 1.5 feet.
3. **Palm trees -** 5' from the base of the trunk.

B. Once determined, the TPZ is to be clearly shown on all plans, including concept plans, for discussion purposes, including at the RAP Capital Improvements Meetings.

C. Beyond the TPZ, the contractor shall also be responsible for protecting all trees within the boundaries of the construction zone, including vehicular access areas leading to the construction zone, lay down areas, and any other areas impacted by construction activities. Any damage to trees in these areas shall also be subject to the same monetary or replacement requirements specified in Section II below. Any necessary root cutting in this area must be confirmed with either the RAP or other approved arborist. See also the General Conditions for any damage done by the contractor to landscaping or other park amenities that fall outside the boundaries of the construction zone.

D. Within the boundaries of the construction zone (including the TPZ), the contractor shall be responsible for mitigating construction-related dust accumulation on all trees by spraying the trunks, limbs, and foliage with water to a maximum height of 30 feet during the months of April through November, at monthly intervals.

E. Within the TPZ, the contractor shall adhere to the following requirements, including, but not limited to:
1. No stockpiling or storage of any material, debris, or soil.
2. No storage of any construction equipment.
3. No vehicular access.
4. No cutting of roots.
5. No disturbance of soil or grade changes.
6. No objects of any kind to be attached to tree trunks.

F. The contractor shall install a 5' high temporary chain link fence with one pedestrian access gate along the boundary of the TPZ. See *5' HIGH TREE PROTECTION FENCE* detail at the end of the document.

G. The contractor shall provide one sign per each 20 lineal ft. of fence bordering the TPZ indicating that fencing shall not be removed. See sign detail that is included as part of the temporary chain link detail.

H. No work is permitted within the TPZ without the approval of each of the following: 1) the project landscape architect, 2) the project manager, and 3) RAP Forestry staff. Any work authorized within the TPZ must be done in accordance with the recommendations of a RAP arborist and under the supervision of a Monitoring Arborist. A Monitoring Arborist must be: 1) an ISA Certified Arborist or a Registered Consulting Arborist, with verifiable experience in protecting trees during construction; 2) approved by RAP Forestry. The Monitoring Arborist shall be hired and paid by the contractor.

I. Irrigation to all trees not specifically designated for removal shall be kept in operation for the duration of the project. Contractor shall be responsible for hand watering all impacted trees if necessitated by temporary shutdowns to existing irrigation systems. Trees are to be irrigated deeply and infrequently so that soil moisture is detectable at a minimum depth of 18" using a soil probe.

J. Upon job completion, contractor shall remove all items installed to protect trees during the construction process.

K. Any of the following Southern California native tree species fall under Ordinance No. 177404 of the Los Angeles Municipal Code:
1. Oaks, including Valley Oak (*Quercus lobata)*, California Live Oak (*Quercus agrifolia),* or any other tree of the oak genus indigenous to California but excluding Scrub Oak *(Quercus dumosa);*
2. Southern California Black Walnut *(Juglans californica* var. c*alifornica);*
3. Western Sycamore *(Platanus racemosa);*
4. California Bay *(Umbellularia californica).*

Contractor shall comply with the requirements of the ordinance found at: http://cityplanning.lacity.org/Code_Studies/Other/ProtectedTreeOrd.pdf.

II. Consequences of violating the Tree Protection Specifications:

A. ANY FAILURE BY THE CONTRACTOR TO ADHERE TO THE REQUIREMENTS SPECIFIED WITHIN THESE SPECIFICATIONS WILL RESULT IN THE SUSPENSION OF ALL CONSTRUCTION ACTIVITIES, TO BE DONE AT THE CONTRACTOR'S EXPENSE. THE CONTRACTOR SHALL BE RESPONSIBLE FOR PAYMENT FOR OR REPLACEMENT OF ANY TREES DAMAGED THROUGH NON-COMPLIANCE WITH THESE SPECIFICATIONS. The choice of whether the damaged trees are replaced or paid for will be determined by RAP Forestry.
1. **Monetary valuations** for damaged trees will be determined by RAP Forestry.
2. **How RAP determines the quantity, species, and location of replacement trees:**
   a) Measuring the diameter of the tree(s) being replaced:
      1) For single trunk trees, the diameter (DBH) is measured 4.5' above the ground.
      2) For multi-trunk trees, the DBH of each of the multiple trunks is measured 4.5' above the ground, then all are summed to arrive at a single diameter value.
   b) The ratio of the sum of calipers (as defined by RAP Nursery Specifications) of new trees planted vs. the sum of the diameters of existing trees removed shall be at least 1:1. The specific number of replacement trees will be determined by RAP Forestry staff and the project landscape architect.
   c) If the replacement ratio cannot be achieved within the project boundaries, then one of the following shall apply:
      1) Deliver the trees to RAP Forestry.
      2) Deliver the trees to the nearest RAP service yard.
      3) Plant the trees beyond the project on an approved, area-wide basis.
   d) RAP Forestry staff and the project landscape architect shall determine the replacement tree species/planting location and shall also ensure the health/quality of the trees.

O:\ARCH_ENG\Tree Protection\2018 Updates-Tree Protection Specs\Tree Protection Specifications - Nov 2018.doc
O:\ARCH_ENG\Tree Protection\2018 Updates-Tree Protection Specs\Tree Protection Specifications - Nov 2018.doc

NOT FOR CONSTRUCTION

18.DEC.2020

ba
belzberg architects
2321 MAIN STREET
SANTA MONICA, CA 90405
310.453.9611
www.belzbergarchitects.com

STUDIO-MLA
251 South Mission Road
Los Angeles, California 90033
T. 213 384 3844 studio-mla.com

#	DESCRIPTION	DATE
25% DD PROGRESS		1/29/21

HOLOCAUST MUSEUM LA EXPANSION

100 THE GROVE DRIVE
LOS ANGELES, CA 90036

TREE DISPOSITION PLAN

PROJECT NUMBER: 17009

L102

12/17/2020 12:49:20 AM

CONSTRUCTION NOTES

1. DRAWING IS DIAGRAMMATIC. VERIFY ALL CONDITIONS AND LOCATIONS ON SITE PRIOR TO THE START OF CONSTRUCTION. NOTIFY LANDSCAPE ARCHITECT IMMEDIATELY IF ANY ERRORS OR DISCREPANCIES ARE FOUND, BEFORE PROCEEDING WITH ANY WORK.
2. DO NOT SCALE DRAWINGS. USE DIMENSIONS AS INDICATED ON PLAN.
3. DO NOT WILLFULLY PROCEED WITH CONSTRUCTION WHEN IT IS OBVIOUS THAT OBSTRUCTIONS AND/OR GRADE DIFFERENCES EXIST THAT MAY NOT HAVE BEEN APPARENT DURING DESIGN. OBTAIN DIRECTION BEFORE PROCEEDING WITH CONSTRUCTION IN SUCH CASES.
4. THE LOCATION OF ALL SERVICE RUNS, SUCH AS WATER SUPPLY, ELECTRICAL (OVERHEAD AND UNDERGROUND), TELEPHONE, SANITARY SEWER, ETC. SHOULD BE ASCERTAINED BEFORE WORK IS STARTED. WHERE THEY WILL BE AFFECTED BY EXCAVATION OR WHERE MACHINES MAY BE WORKING NEARBY, THEY SHOULD BE CAREFULLY SEALED, PROTECTED, OR DIVERTED. NOTIFY LANDSCAPE ARCHITECT OF ANY CONFLICT WITH PROPOSED IMPROVEMENTS.
5. COORDINATE ALL UTILITY RUNS AND INSTALLATIONS (EXISTING AND NEW) PRIOR TO PAVING INSTALLATION. VERIFY ALL SLEEVES AND ELECTRIC SOURCES FOR IRRIGATION CLOCK AND LIGHTING WITH PROPER SUB-CONTRACTORS.
6. CLEAN OUT AND ADJUST EXISTING DRAINS TO ACCOMMODATE PROPOSED DRAINAGE. ADJUST LATERAL DRAIN LINES AS NECESSARY TO BEST LINK EXISTING MAIN LINES.
7. OBTAIN INSPECTION AND APPROVAL OF ALL FORMS PRIOR TO PLACING CONCRETE.
8. TRANSITIONS FROM EXISTING PAVING TO NEW PAVING SHALL BE FLUSH.
9. REFER TO PLANS AND GENERAL NOTES FOR ADDITIONAL NOTES AND INFORMATION REGARDING THE CONSTRUCTION OF THIS PROJECT.
10. CONSTRUCT ALL WALLS, PAVING, DRAIN LINES, SLEEVING, ETC. PER PLAN AND DETAILS.
11. CONCRETE TO SLOPE FROM FOUNDATION TOWARDS DRAIN INLETS AND DRAINAGE SWALES AT A MINIMUM RATE OF 1/8" PER FOOT. INSTALL CONCRETE FORMS WITH LONG, SMOOTH GRADIENTS TO ELIMINATE DIPS, RIDGES, ABRUPT CHANGES OF GRADE, AND SHARP TRANSITIONS.
12. INSTALL EXPANSION JOINTS AT ALL VERTICAL ELEMENTS INSTALL CRACK CONTROL JOINTS AT MAX. 12'-0". ZIP JOINTS WILL NOT BE ALLOWED. INSTALL EJ'S AND CCJ'S AT 90° TO THE EDGE OF CONCRETE PAVING. SEE PLAN FOR ADDITIONAL INFORMATION AND LOCATIONS.
13. PRIOR TO PLACING CONCRETE, SUFFICIENTLY MOISTEN THE SUBGRADE AND PROVIDE SUBGRADE PREPARATIONS PER THE SOILS ENGINEER.
14. INSTALL TYPE II OR TYPE V CONCRETE THAT OBTAINS A MINIMUM COMPRESSIVE STRENGTH OF 2,500 P.S.I. AT 28 DAYS UNLESS OTHERWISE SPECIFIED ON THESE PLANS AND DETAILS. SUBMIT DESIGN MIXES AND CONCRETE SAMPLE TO OWNER AND LANDSCAPE ARCHITECT PRIOR TO LAYING OUT FORMS. INSTALL CONCRETE FLATWORK PER RECOMMENDATIONS OF SOILS ENGINEER AND SOILS REPORT. IN CASE OF CONFLICT BETWEEN SOILS REPORT AND DETAILS, THE MOST STRINGENT REQUIREMENTS WILL APPLY.
15. BACKFILL AND COMPACT BEHIND ALL WALLS AND MASONRY STRUCTURES, AS REQUIRED ON DRAWINGS AND DETAILS. BACKFILL PLANTERS WITH TOP GRADE SANDY-LOAM TOPSOIL PER PLANTING NOTES.
16. CLEAN UP AND REMOVE ALL DEBRIS FROM SITE PRIOR TO REQUESTING FINAL APPROVAL. GRADE ALL AREAS WITHIN .5 INCH OF FINISH GRADES. NOTE AREAS OF ADDITIONAL GRADING SHOWN. COORDINATE WITH LANDSCAPE ARCHITECT THE FINAL FORM OF LANDSCAPE MOUNDS.

REFERENCE NOTES SCHEDULE

	AMENITIES							
SYMBOL	DESCRIPTION	QTY	DETAIL	MODEL	FINISH	COLOR	MANUFACTURER	
A-101	SECURITY BOLLARD	14	1/L630	TBD	STAINLESS STEEL SATIN	TBD	TBD	
A-102	BENCH AT REFLECTION GARDEN	42 LF	2/L611	CUSTOM	SEE DETAIL	SEE DETAIL	CUSTOM	
A-103	CHARRED LOGS AT REFLECTION GARDEN	50		ANGEL CITY LUMBER	CHARRED LOGS, SIZES VARY (6"DIA X 8" LONG OR 9" DIA X 6" LONG)	SHOU SUGI BAN		CHARRED LOGS TO BE TREATED IN THE METHOD OF SHOU SUGI BAN
	FENCE							
SYMBOL	DESCRIPTION	QTY	DETAIL	MATERIAL	FINISH	COLOR	MANUFACTURER	
F-101	SECURITY PICKET FENCE	144 LF	1/L620	SEE DETAIL	PAINTED	TBD	CUSTOM	
	GATE							
SYMBOL	DESCRIPTION	QTY	DETAIL	MATERIAL	FINISH	COLOR	MANUFACTURER	
G-101	GATE AT SECURITY PICKET FENCE	3	1/L621	SEE DETAIL	PAINTED	TBD	CUSTOM	
	BOULDER							
SYMBOL	DESCRIPTION	QTY	DETAIL	MATERIAL	FORM	COLOR	SUPPLIER	
K-101	BOULDERS AT EQUITY PLAZA	3	6/L601	TBD	TBD	TBD		
K-102	BOULDERS AT PLAZA	5	6/L601	TBD	TBD	TBD		
K-103	BOULDERS AT REFLECTION GARDEN	15	6/L601	CLEFT BENCH BOULDERS	CLEFT FACE	TBD	SOUTHWEST BOULDER AND STONE	
	PAVING							
SYMBOL	DESCRIPTION	QTY	DETAIL	MATERIAL	FINISH	COLOR	MANUFACTURER	REMARKS
P-101	DECORATIVE CONCRETE PAVING	4,239 SF	2/L601	CIP CONCRETE PAVING	TOPCAST 25	INTEGRAL COLOR TBD	TRADEMARK OR EQUAL	
P-102	VEHICULAR CONCRETE PAVING	1,565 SF	2/L601	CIP CONCRETE PAVING	TOPCAST 25	INTEGRAL COLOR TBD	TRADEMARK OR EQUAL	
P-103	DECORATIVE CONCRETE PAVING AT PLAZA- TYPE 1	1,027 SF	2/L601	CIP CONCRETE PAVING	GROUND FINISH, 400 GRIT	DAVIS DARK GRAY 860	TRADEMARK OR EQUAL	TO INCLUDE 1/2"-1" CHINA WHITE AGGREGATES (100%)
P-104	DECORATIVE CONCRETE PAVING AT PLAZA- TYPE 2	4,747 SF	2/L601	CIP CONCRETE PAVING	TOPCAST 05	DAVIS DARK GRAY 860	TRADEMARK OR EQUAL	
P-110	DECORATIVE CONCRETE STAIRS	244 SF	TBD	CIP CONCRETE STAIRS	TOPCAST 05	INTEGRAL COLOR TBD	TRADEMARK OR EQUAL	
P-301	DECOMPOSED GRANITE PAVING	284 SF	4/L601	SOUTHWEST BOULDER AND STONE	DECOMPOSED GRANITE WITH INTEGRAL STABILIZER	GRAPHITE GRAY	SOUTHWEST BOULDER AND STONE	
P-302	DECORATIVE GRAVEL AT REFLECTION GARDEN	326 SF	5/L601	1"-3" BLACK KNIGHT SLATE CHIPS	LOOSE		SOUTHWEST BOULDER AND STONE	
P-303	DECORATIVE GRAVEL AT EXISTING MUSEUM ROOF	8,268 SF	7/L601	1"-3" BLACK KNIGHT SLATE CHIPS	LOOSE	-	SOUTHWEST BOULDER AND STONE	
P-304	DECORATIVE GRAVEL INFILL AT EQUITY COURTYARD	421 SF	3/L601	3/8" INDIGO CRUSHED BASALT CHIPS	WITH BINDER	NATURAL	SOUTHWEST BOULDER AND STONE	BINDER: GRAVEL LOK- SOUTHWEST BOULDER AND STONE. GRAVEL LOK TO BE MATTE FINISH, NO GLOSS
	RAILING							
SYMBOL	DESCRIPTION	QTY	DETAIL	MATERIAL	FINISH	COLOR	MANUFACTURER	
R-101	HANDRAIL AT STAIRS	20 LP	3/L621	1.67" DIA. STAINLESS STEEL	SATIN #4	-	CUSTOM	
	WALL							
SYMBOL	DESCRIPTION	QTY	DETAIL	MATERIAL	FINISH	COLOR	MANUFACTURER	
W-101	CIP CONCRETE PLANTER WALL	441 LF	1/L610	CIP CONCRETE	TOPCAST 05 OR EQUAL	INTEGRAL COLOR TBD	TRADEMARK OR EQUAL	
W-102	CIP CONCRETE SEATWALL AT PLAZA	225 LF	2/L610	TRADEMARK OR EQUAL	CIP CONCRETE	TBD	TBD	
W-103	CIP CONCRETE PLANTER CURB AT PLAZA	27 LF	3/L610	CIP CONCRETE	TOPCAST 05 OR EQUAL	INTEGRAL COLOR TBD	TRADEMARK OR EQUAL	
W-104	CIP CONCRETE SEATWALL AT SOUTH PLAZA	32 LF	4/L610	CIP CONCRETE	TOPCAST 05	INTEGRAL COLOR TBD	TRADEMARK OR EQUAL	
W-301	METAL WALL AT REFLECTION GARDEN	15 LF	1/L611	1/2" THICK, BLACKENED STEEL	-	-	CUSTOM	

NOT FOR CONSTRUCTION

18.DEC.2020

belzberg architects
2321 MAIN STREET
SANTA MONICA, CA 90405
310.453.9611
www.belzbergarchitects.com

STUDIO-MLA
251 South Mission Road
Los Angeles, California 90033
T. 213 384 3844 studio-mla.com

#	DESCRIPTION	DATE
25%	DD PROGRESS	1/29/21

HOLOCAUST MUSEUM LA EXPANSION

100 THE GROVE DRIVE
LOS ANGELES, CA 90036

CONSTRUCTION SCHEDULES AND NOTES

PROJECT NUMBER: 17009

L200

12/17/2020 12:48:20 AM

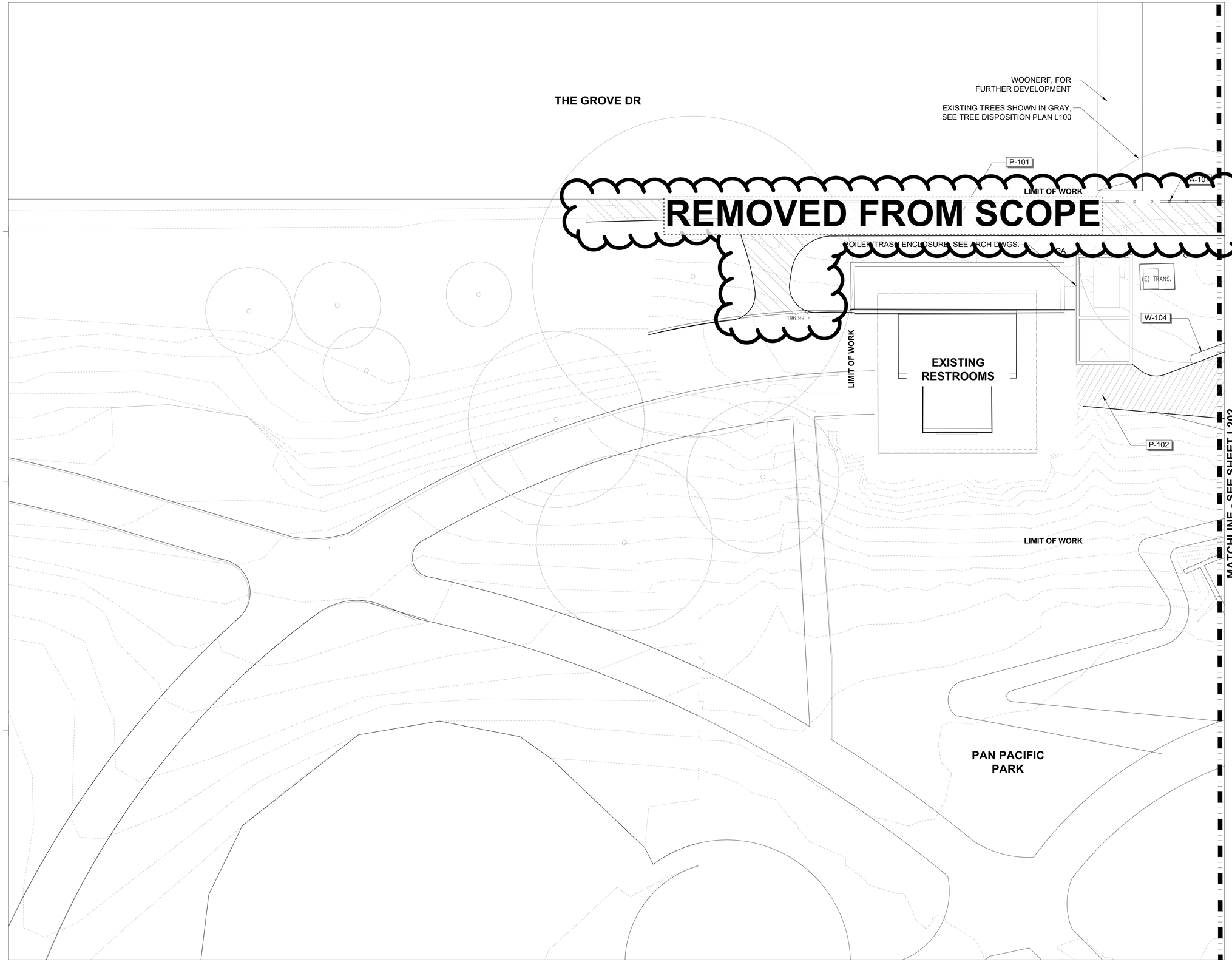

NOT FOR CONSTRUCTION

18.DEC.2020

ba
belzberg architects
2321 MAIN STREET
SANTA MONICA, CA 90405
310.453.9611
www.belzbergarchitects.com

STUDIO-MLA
251 South Mission Road
Los Angeles, California 90033
T. 213 384 3844 studio-mla.com

#	DESCRIPTION	DATE
25%	DD PROGRESS	1/29/21

HOLOCAUST
MUSEUM LA
EXPANSION

100 THE GROVE DRIVE
LOS ANGELES, CA 90036

KEY PLAN

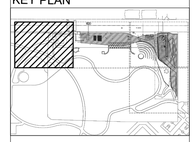

CONSTRUCTION
PLAN

PROJECT NUMBER: 17009

L201

12/17/2020 12:48:20 AM

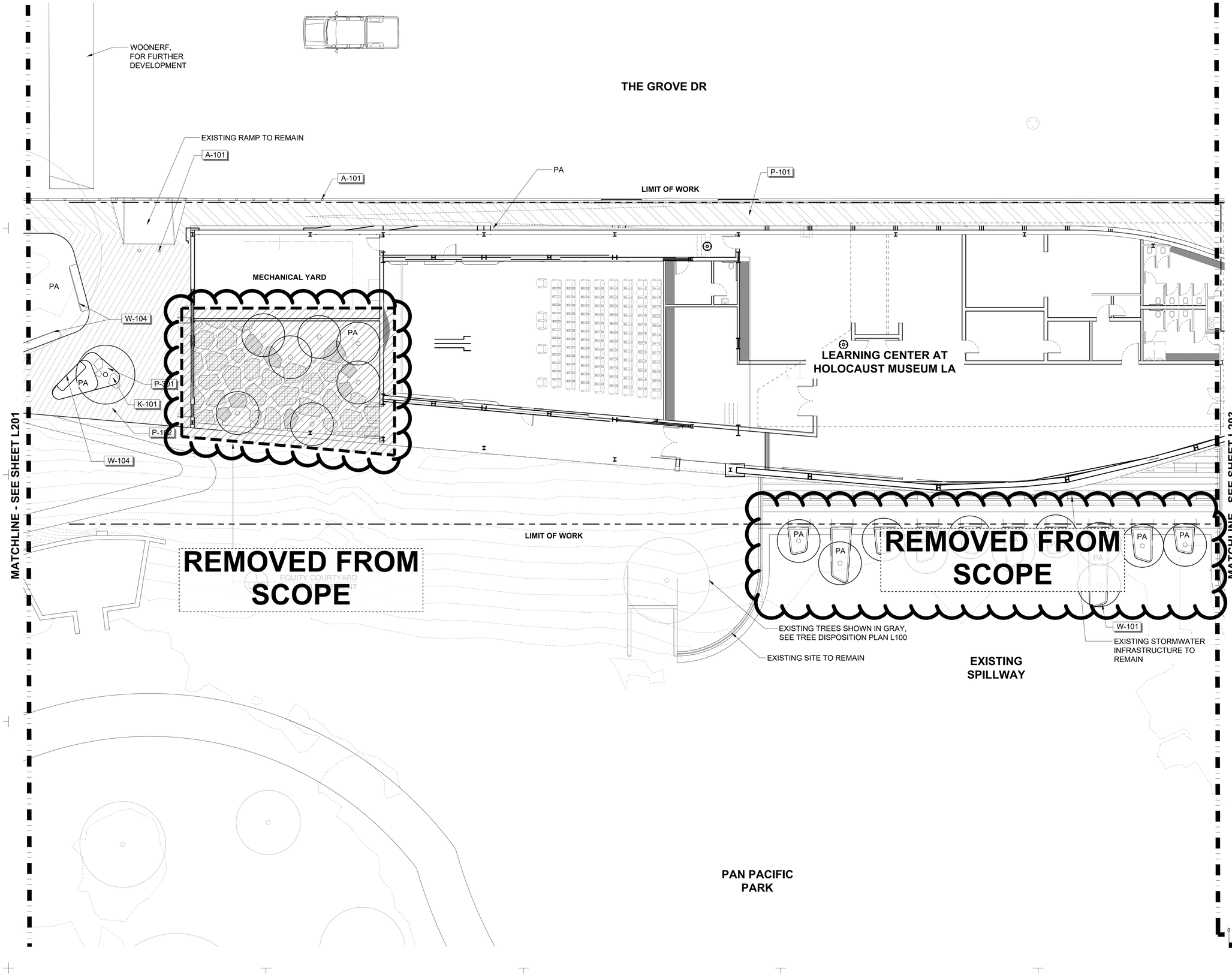

NOT FOR CONSTRUCTION

18.DEC.2020

ba
belzberg architects
2321 MAIN STREET
SANTA MONICA, CA 90405
310.453.9611
www.belzbergarchitects.com

STUDIO-MLA
251 South Mission Road
Los Angeles, California 90033
T. 213 384 3844 studio-mla.com

#	DESCRIPTION	DATE
25% DD PROGRESS		1/29/21

HOLOCAUST
MUSEUM LA
EXPANSION

100 THE GROVE DRIVE
LOS ANGELES, CA 90036

KEY PLAN

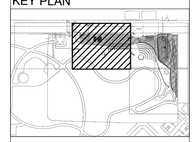

CONSTRUCTION
PLAN

PROJECT NUMBER: 17009

L202

12/17/2020 12:49:20 AM

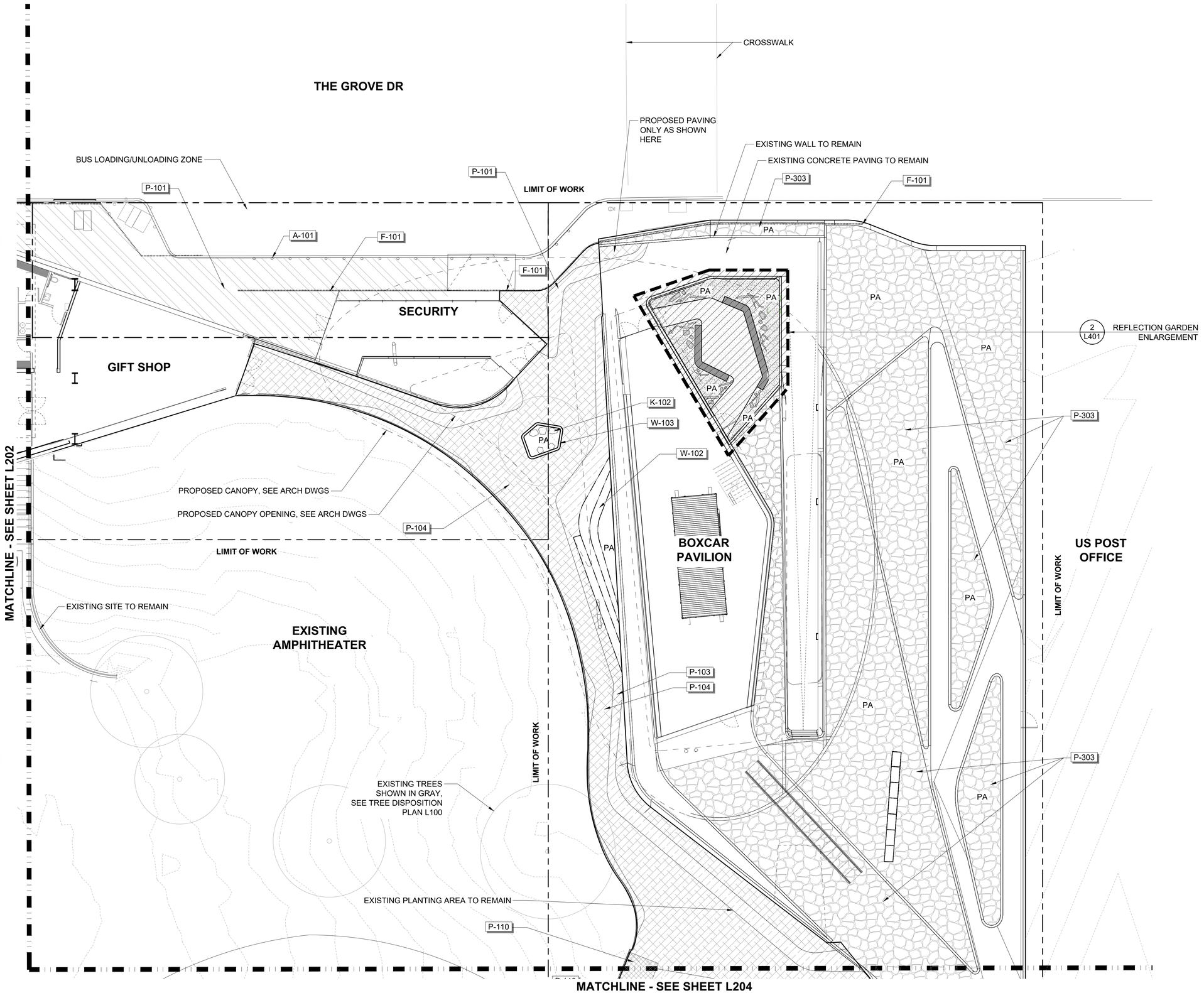

NOT FOR CONSTRUCTION

18.DEC.2020

ba
belzberg architects
2321 MAIN STREET
SANTA MONICA, CA 90405
310.453.9611
www.belzbergarchitects.com

STUDIO-MLA
251 South Mission Road
Los Angeles, California 90033
T. 213 384 3844 studio-mla.com

#	DESCRIPTION	DATE
25% DD PROGRESS		1/29/21

HOLOCAUST MUSEUM LA EXPANSION

100 THE GROVE DRIVE
LOS ANGELES, CA 90036

KEY PLAN

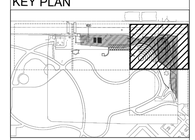

CONSTRUCTION PLAN

PROJECT NUMBER: 17009

L203

N

0 5' 10' 20'
1" = 10'

12/17/2020 12:48:20 AM

MATCHLINE - SEE SHEET L203

P-110

R-101

G-101

F-101

MARTYR'S MEMORIAL

PA

PA

P-303

P-103

P-103

P-104

LIMIT OF WORK

US POST OFFICE

LIMIT OF WORK

CHILDREN'S MEMORIAL

PROPOSED ARCHITECTURAL CANOPY, SEE ARCH DWGS

PAN PACIFIC PARK

EXISTING TREES SHOWN IN GRAY, SEE TREE DISPOSITION PLAN L100

EXISTING CONCRETE PAVING TO REMAIN

F-101

G-101

P-110

F-101

G-101

LIMIT OF WORK

F-101

N

0 15' 30' 60'

1" = 30'

NOT FOR CONSTRUCTION

18.DEC.2020

ba
belzberg architects
2321 MAIN STREET
SANTA MONICA, CA 90405
310.453.9611

www.belzbergarchitects.com

STUDIO-MLA
251 South Mission Road
Los Angeles, California 90033
T. 213 384 3844 studio-mla.com

#	DESCRIPTION	DATE
25% DD PROGRESS		1/29/21

HOLOCAUST MUSEUM LA EXPANSION

100 THE GROVE DRIVE
LOS ANGELES, CA 90036

KEY PLAN

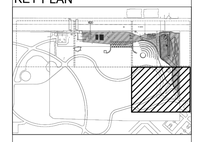

CONSTRUCTION PLAN

PROJECT NUMBER: 17009

L204

12/17/2020 12:49:20 AM

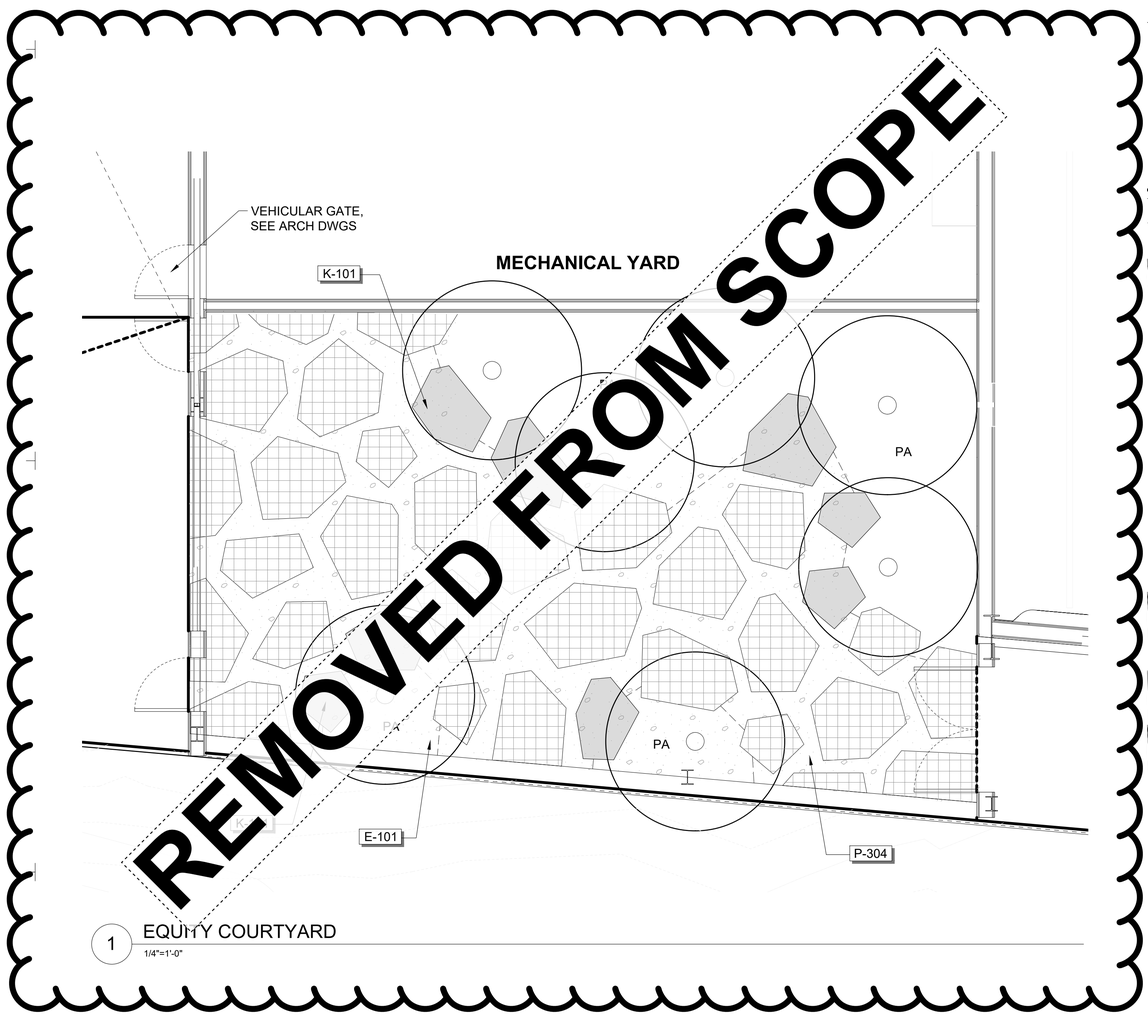

1 EQUITY COURTYARD
1/4"=1'-0"

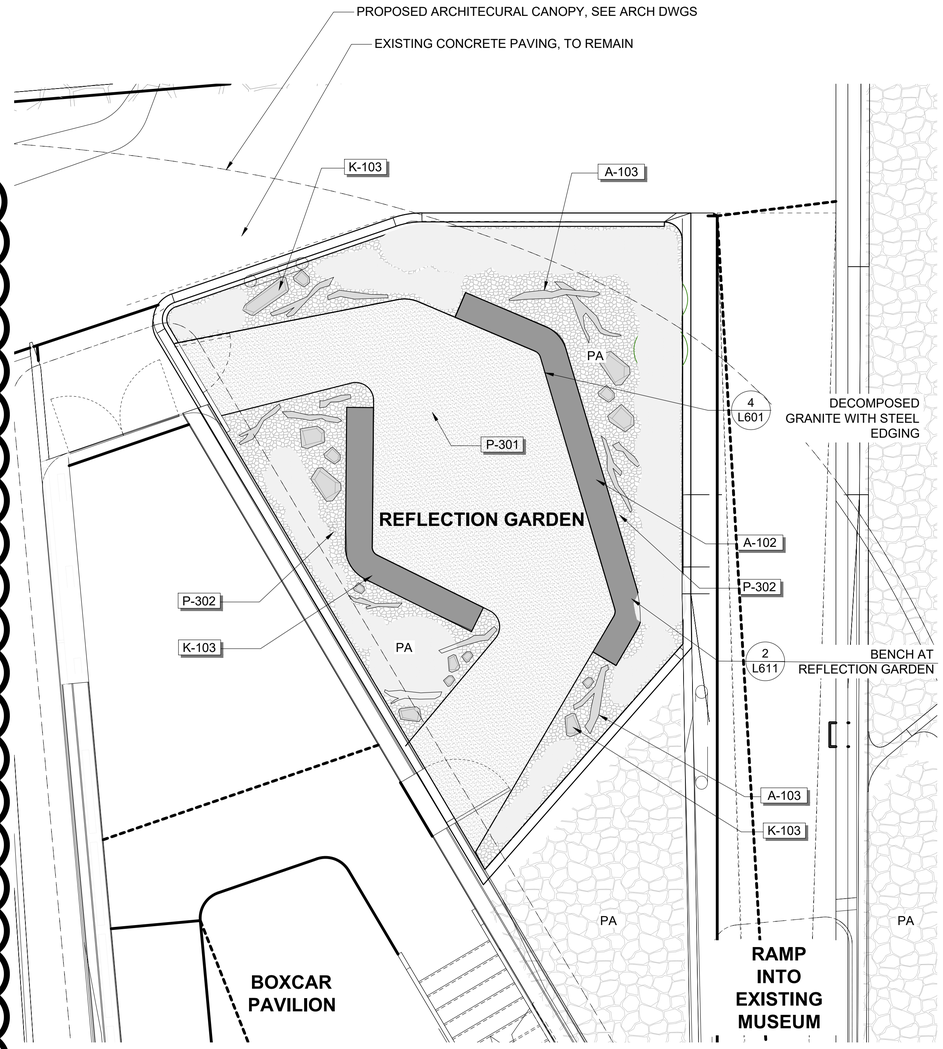

2 REFLECTION GARDEN
1/4"=1'-0"

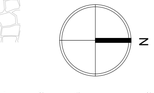

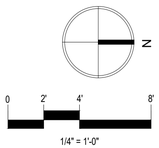

NOT FOR CONSTRUCTION

18.DEC.2020

belzberg architects
2321 MAIN STREET
SANTA MONICA, CA 90405
310.453.9611
www.belzbergarchitects.com

STUDIO-MLA
251 South Mission Road
Los Angeles, California 90033
T. 213 384 3844 studio-mla.com

#	DESCRIPTION	DATE
25% DD PROGRESS		1/29/21

HOLOCAUST MUSEUM LA EXPANSION

100 THE GROVE DRIVE
LOS ANGELES, CA 90036

KEY PLAN

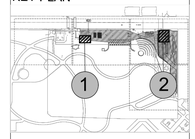

ENLARGEMENT PLAN

PROJECT NUMBER: 17009

L401

12/17/2020 12:48:20 AM

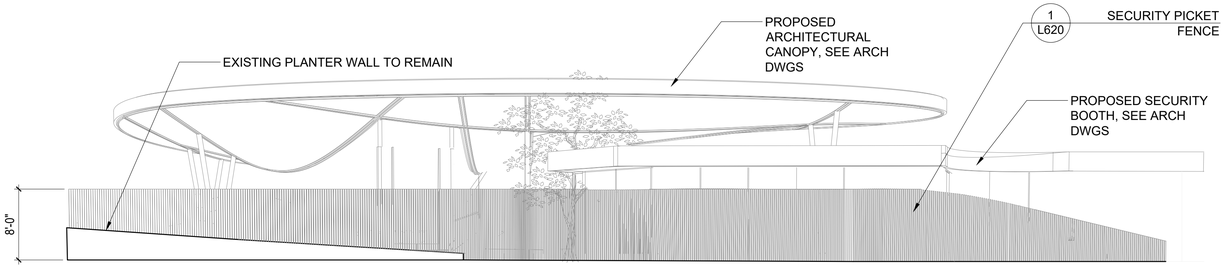

1 FENCE ELEVATION A

1/8"=1'-0"

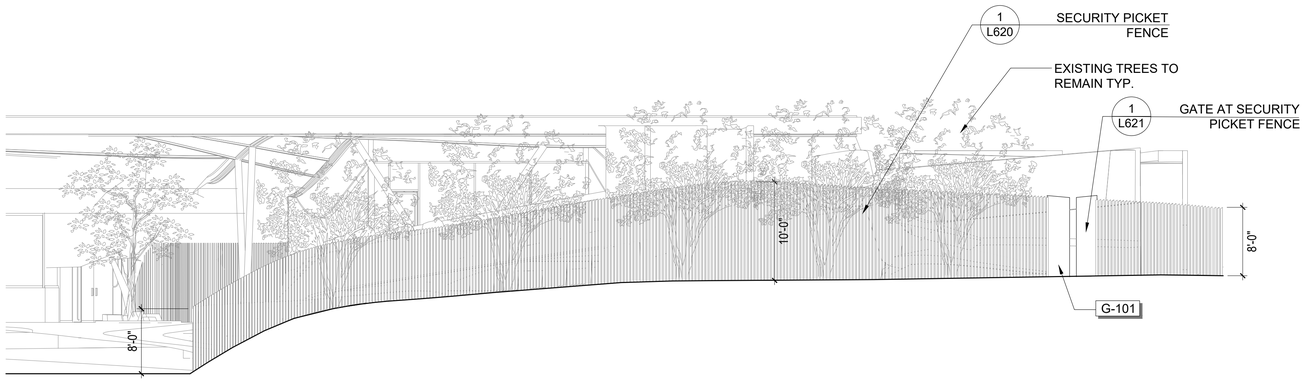

2 FENCE ELEVATION B

1/8"=1'-0"

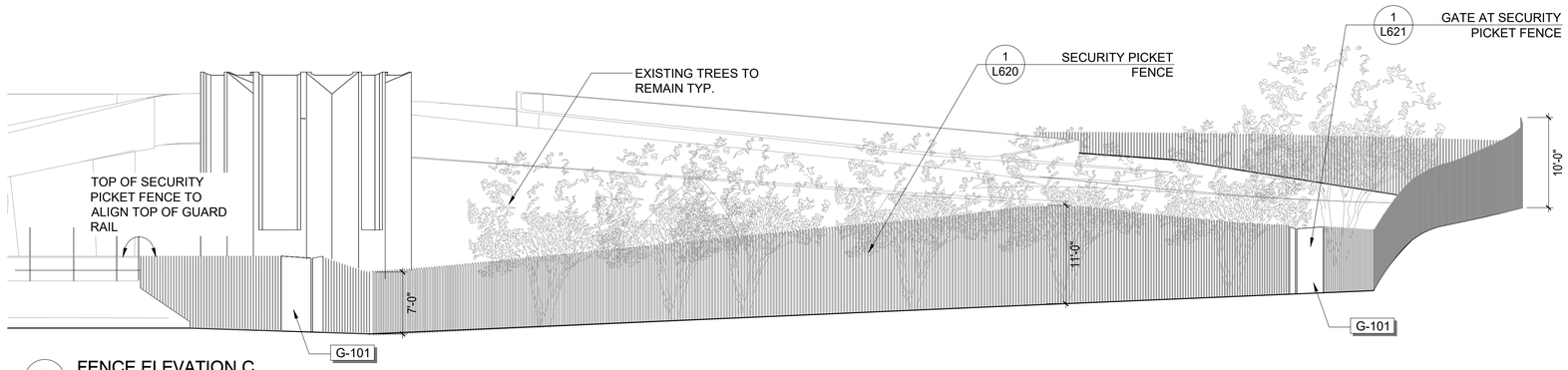

3 FENCE ELEVATION C

1/8"=1'-0"

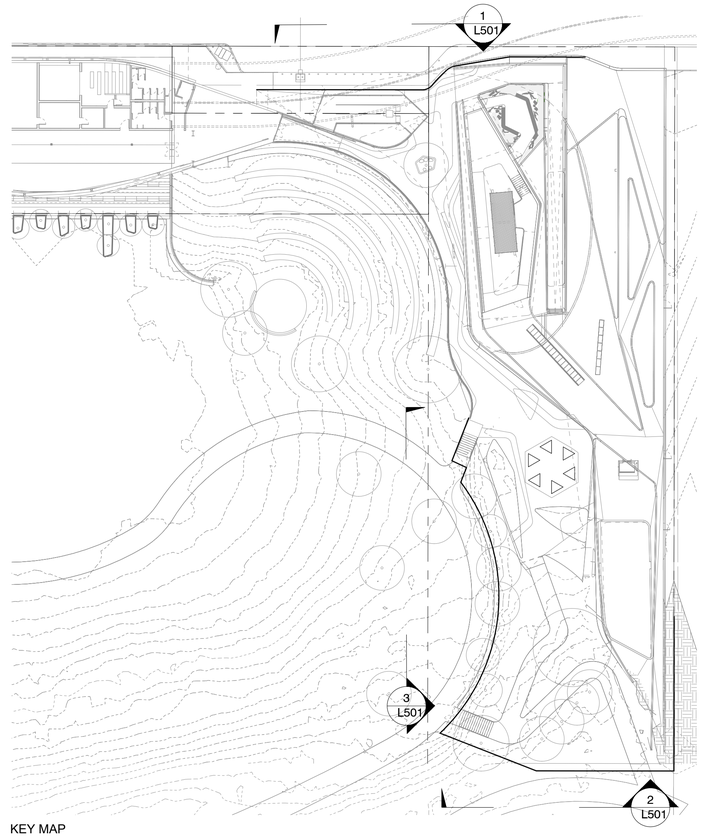

KEY MAP

NOTE: REFER TO CIVIL DRAWINGS FOR GRADING AND ELEVATIONS

NOTE: GRAPHICS SHOWN FOR DESIGN INTENT. NOT FOR CONSTRUCTION.

NOT FOR CONSTRUCTION

18.DEC.2020

ba
belzberg architects
2321 MAIN STREET
SANTA MONICA, CA 90405
310.453.9611
www.belzbergarchitects.com

STUDIO-MLA
251 South Mission Road
Los Angeles, California 90033
T. 213 384 3844 studio-mla.com

#	DESCRIPTION	DATE
25% DD PROGRESS		1/29/21

HOLOCAUST MUSEUM LA EXPANSION

100 THE GROVE DRIVE
LOS ANGELES, CA 90036

ELEVATIONS & SECTIONS

PROJECT NUMBER: 17009

L501

12/17/2020 12:48:20 AM

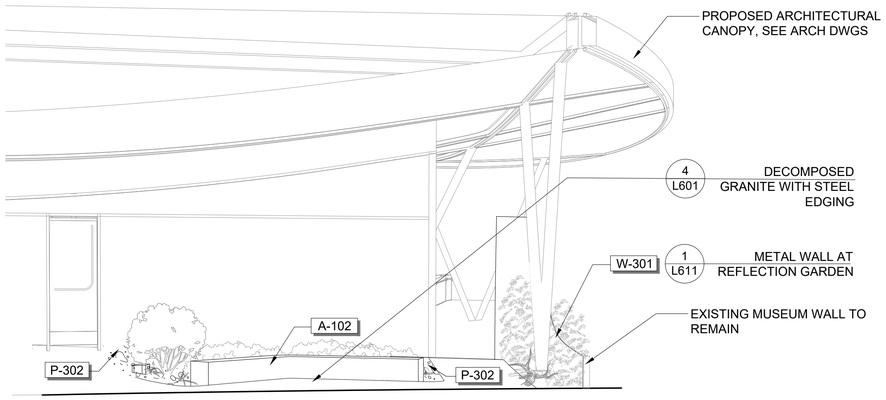

1 REFLECTION GARDEN SECTION A

1/4"=1'-0"

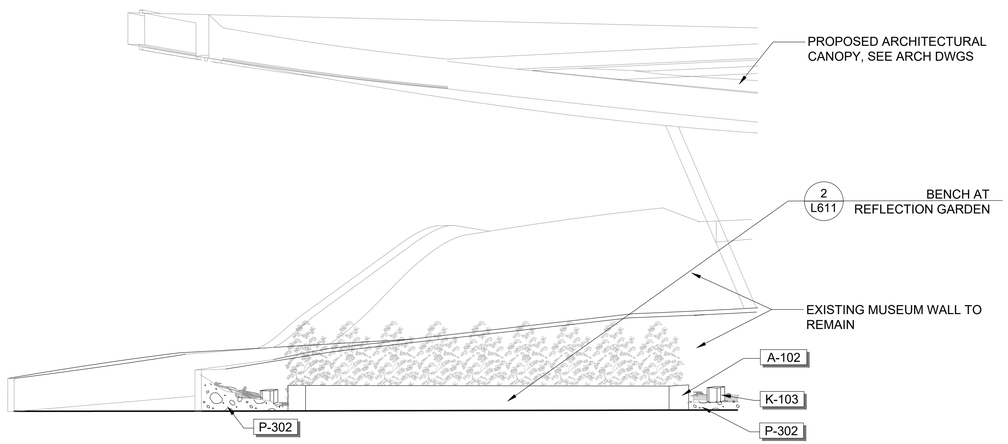

2 REFLECTION GARDEN SECTION B

1/4"=1'-0"

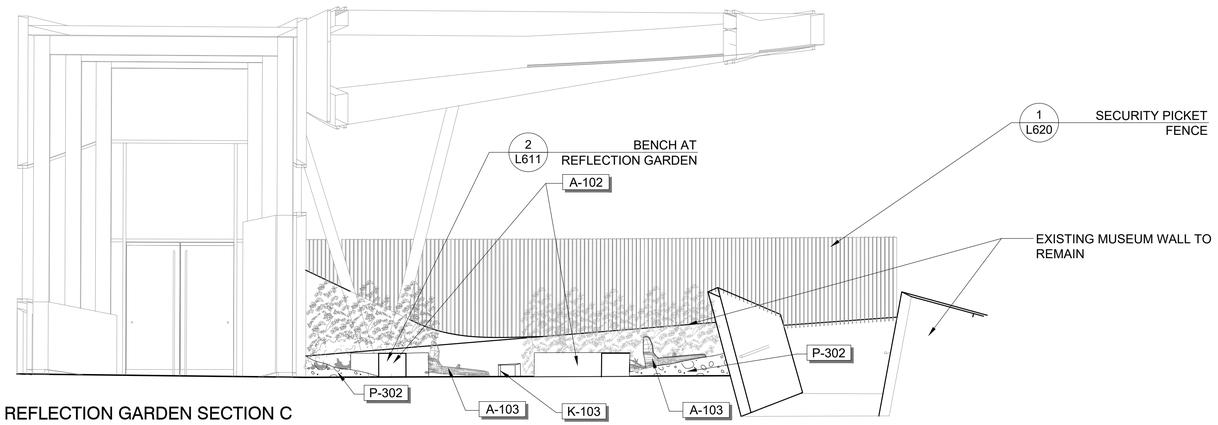

3 REFLECTION GARDEN SECTION C

1/4"=1'-0"

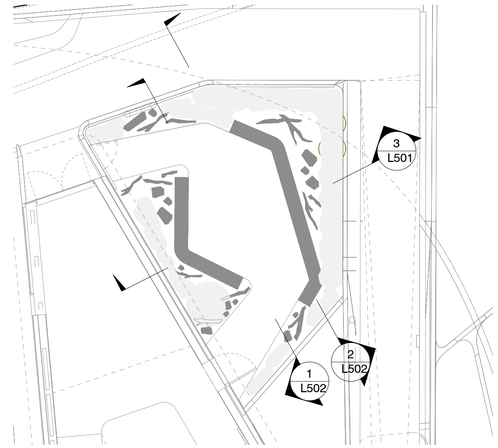

KEY MAP

NOTE: REFER TO CIVIL DRAWINGS FOR GRADING AND ELEVATIONS

NOTE: GRAPHICS SHOWN FOR DESIGN INTENT. NOT FOR CONSTRUCTION.

NOT FOR CONSTRUCTION

18.DEC.2020

ba
belzberg architects
2321 MAIN STREET
SANTA MONICA, CA 90405
310.453.9611
www.belzbergarchitects.com

STUDIO-MLA
251 South Mission Road
Los Angeles, California 90033
T. 213 384 3844 studio-mla.com

#	DESCRIPTION	DATE
	25% DD PROGRESS	1/29/21

HOLOCAUST MUSEUM LA EXPANSION

100 THE GROVE DRIVE
LOS ANGELES, CA 90036

ELEVATIONS & SECTIONS

PROJECT NUMBER: 17009

L502

12/17/2020 12:49:20 AM

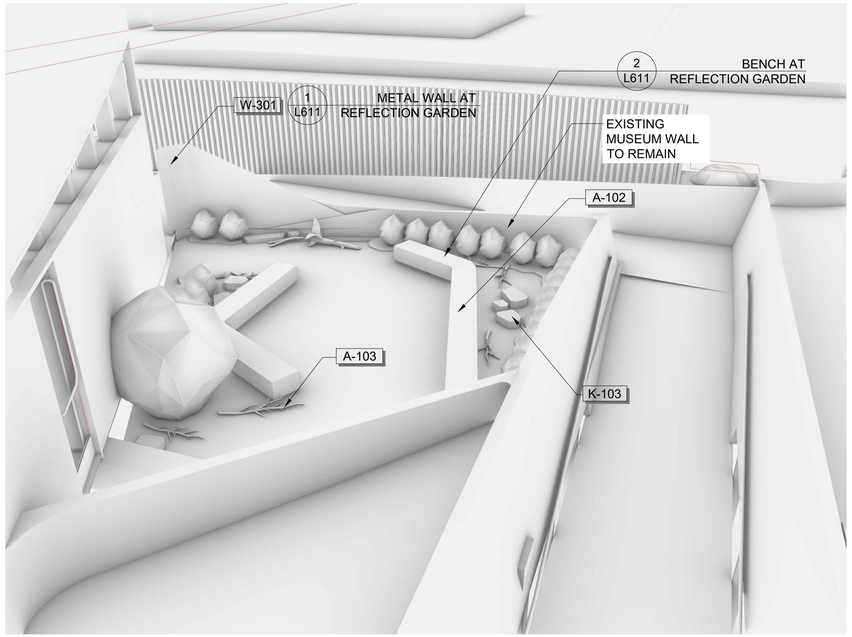

1 REFLECTION GARDEN RENDERING A

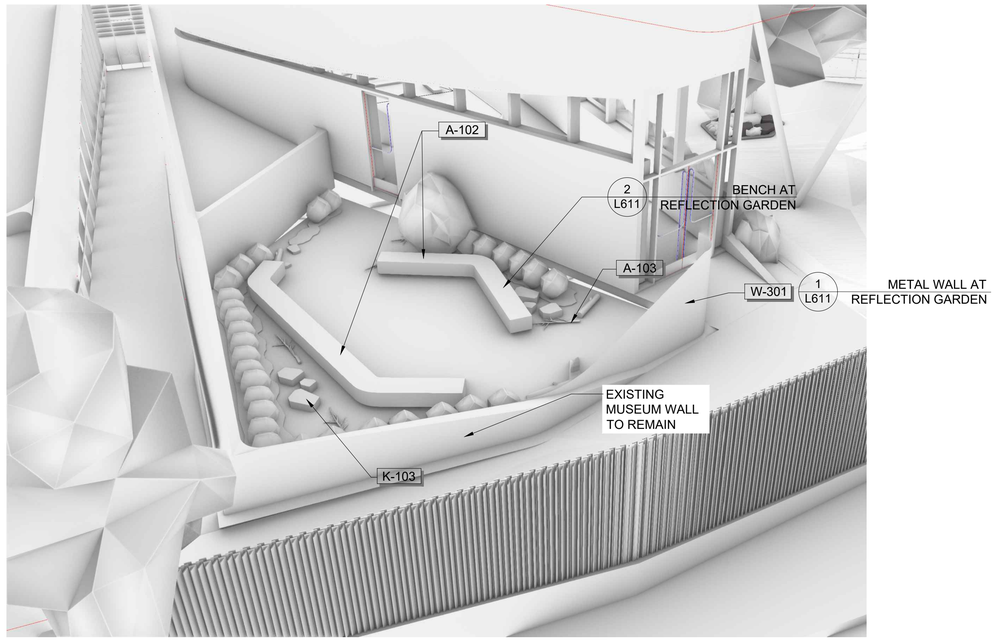

2 REFLECTION GARDEN RENDERING B

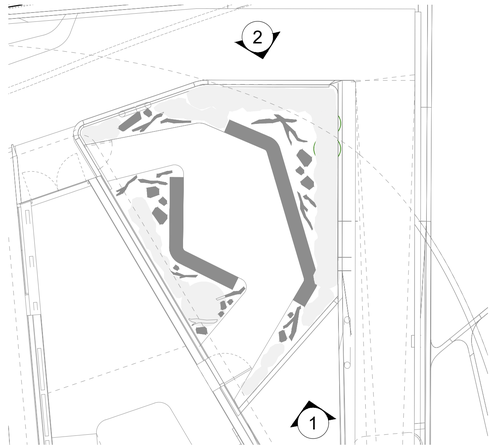

KEY MAP

NOTE: REFER TO CIVIL DRAWINGS FOR
GRADING AND ELEVATIONS

NOTE: GRAPHICS SHOWN FOR DESIGN INTENT. NOT FOR CONSTRUCTION.

NOT FOR CONSTRUCTION

18.DEC.2020

ba
belzberg architects
2321 MAIN STREET
SANTA MONICA, CA 90405
310.453.9611
www.belzbergarchitects.com

STUDIO-MLA
251 South Mission Road
Los Angeles, California 90033
T. 213 384 3844 studio-mla.com

#	DESCRIPTION	DATE
	25% DD PROGRESS	1/29/21

HOLOCAUST
MUSEUM LA
EXPANSION

100 THE GROVE DRIVE
LOS ANGELES, CA 90036

ELEVATIONS &
SECTIONS

PROJECT NUMBER: 17009

L503

12/17/2020 12:49:20 AM

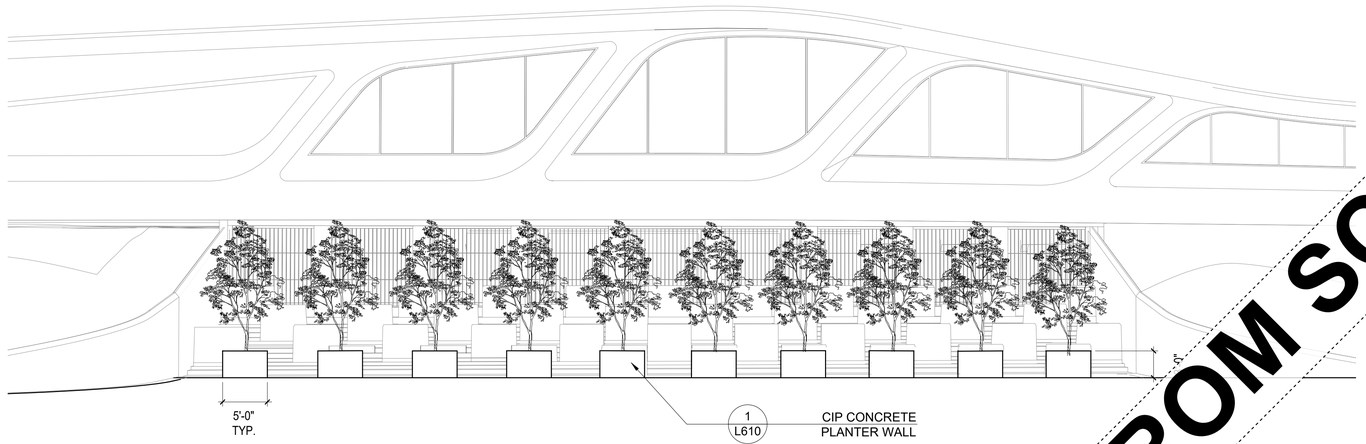

1 PLANTERS AT LEARNING CENTER ELEVATION

1/8"=1'-0"

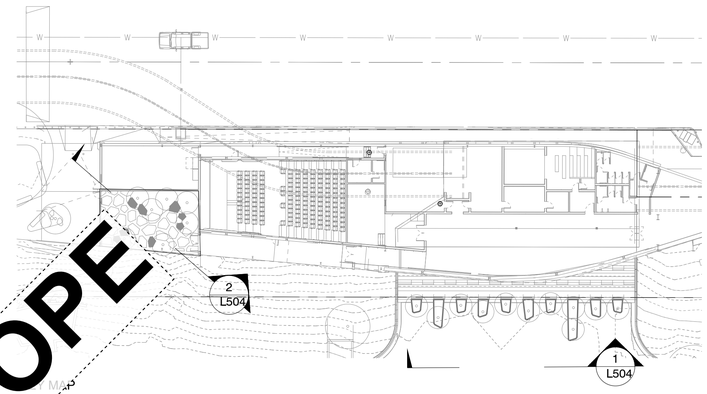

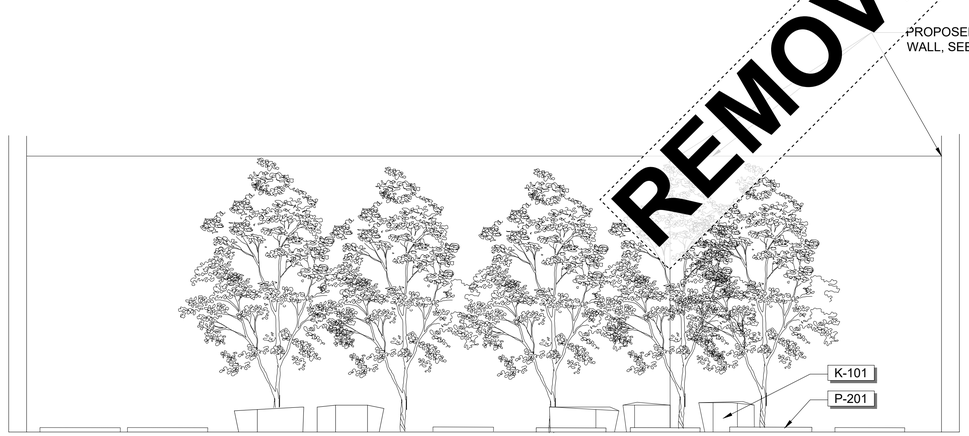

2 PLANTERS AT LEARNING CENTER ELEVATION

1/4"=1'-0"

REMOVED FROM SCOPE

NOTE: REFER TO CIVIL DRAWINGS FOR GRADING AND ELEVATIONS

NOTE: GRAPHICS SHOWN FOR DESIGN INTENT. NOT FOR CONSTRUCTION.

NOT FOR CONSTRUCTION

18.DEC.2020

ba
belzberg architects
2321 MAIN STREET
SANTA MONICA, CA 90405
310.453.9611
www.belzbergarchitects.com

STUDIO-MLA
251 South Mission Road
Los Angeles, California 90033
T. 213 384 3844 studio-mla.com

#	DESCRIPTION	DATE
	25% DD PROGRESS	1/29/21

HOLOCAUST MUSEUM LA EXPANSION

100 THE GROVE DRIVE
LOS ANGELES, CA 90036

ELEVATIONS & SECTIONS

PROJECT NUMBER: 17009

L501

12/17/2020 12:49:20 AM

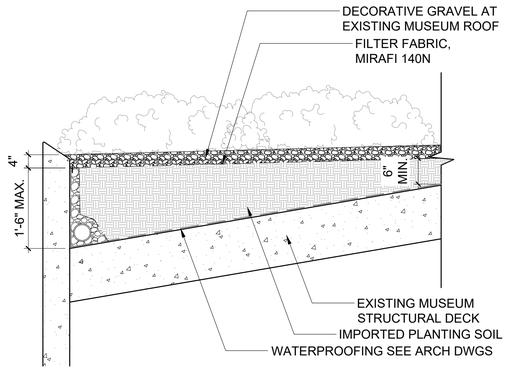

7 DECORATIVE GRAVEL AT EXISTING MUSEUM ROOF

3/4" = 1'-0" P-HML-321543-03

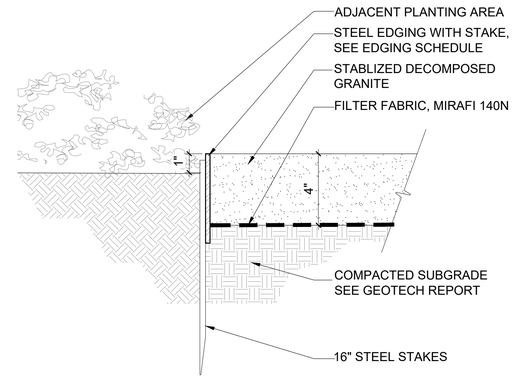

4 DECOMPOSED GRANITE WITH STEEL EDGING

3" = 1'-0" P-HML-321516-01

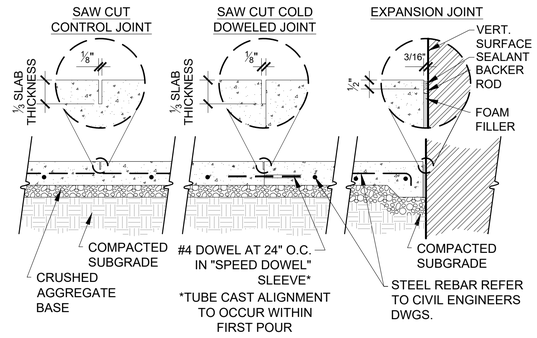

NOTES:
1. REFER TO PAVING SCHEDULE FOR ALL COLORS, TYPES, AND FINISHES.
2. REFER TO GEOTECHNICAL REPORT AND CIVIL ENGINEER'S PLANS FOR ALL FINAL REINFORCING REQUIREMENTS, THICKNESSES, AND SOIL SUBGRADE PREPARATION.
3. REFER TO PLAN FOR ALL JOINTING LOCATIONS.

1 TYPICAL CONCRETE JOINTS

1" = 1'-0" P-HML-321313-01

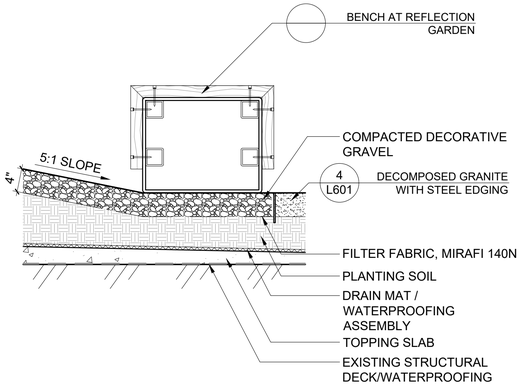

5 DECORATIVE GRAVEL AT REFLECTION GARDEN

1" = 1'-0" P-HML-321543-02

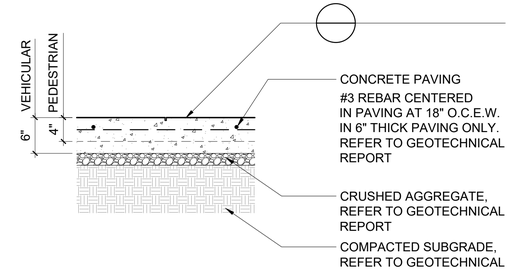

2 CONCRETE PAVING

1" = 1'-0" P-HML-321313-12

NOTE: REFER TO PLAN FOR SIZES AND LOCATIONS.

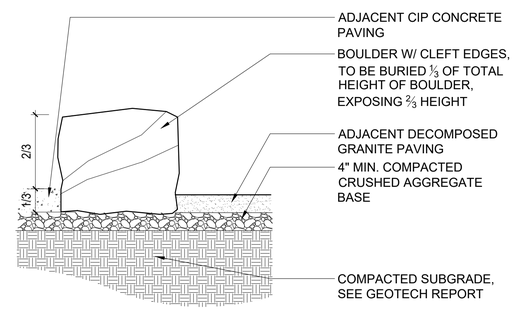

6 BOULDER PLACEMENT

1" = 1'-0" K-101, K-102, K-103 P-HML-323343-11

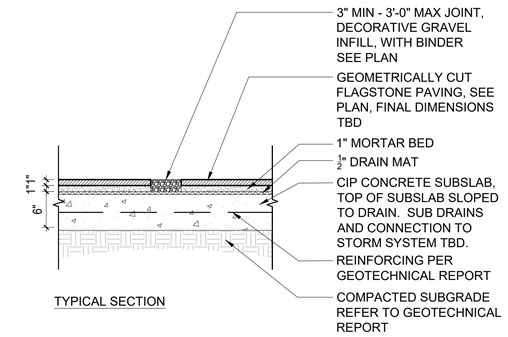

3 STONE PAVING AT EQUITY COURTYARD

1" = 1'-0" P-HML-321440-12

NOT FOR CONSTRUCTION

18.DEC.2020

ba
belzberg architects
2321 MAIN STREET
SANTA MONICA, CA 90405
310.453.9611
www.belzbergarchitects.com

STUDIO-MLA
251 South Mission Road
Los Angeles, California 90033
T. 213 384 3844 studio-mla.com

#	DESCRIPTION	DATE
25% DD PROGRESS		1/29/21

HOLOCAUST MUSEUM LA EXPANSION

100 THE GROVE DRIVE
LOS ANGELES, CA 90036

CONSTRUCTION DETAILS - PAVING AND EDGING

PROJECT NUMBER: 17009

L601

12/17/2020 12:49:20 AM

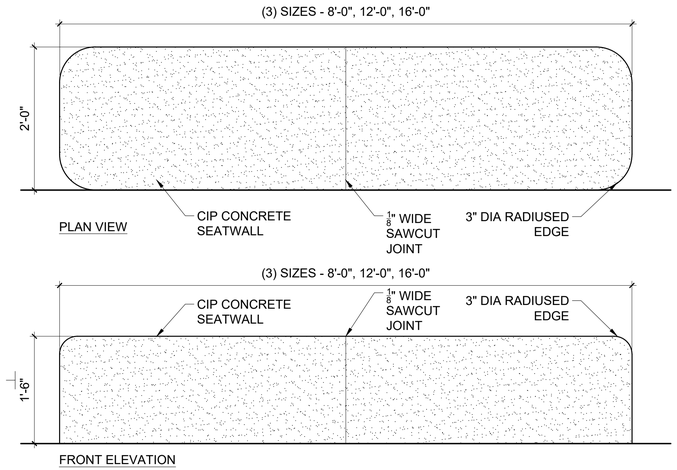

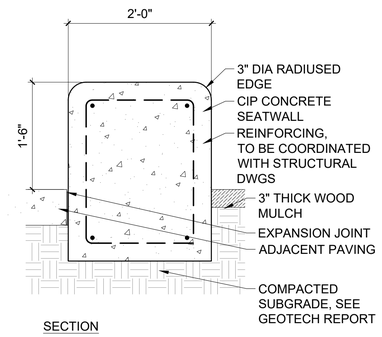

NOTES:
SKATEBOARD DETERRENT TO BE INTEGRATED INTO FORMWORK OF BENCH TO BE COORDINATED.

4 CIP CONCRETE SEATWALL AT SOUTH PLAZA

1" = 1'-0" P-HML-033373-02

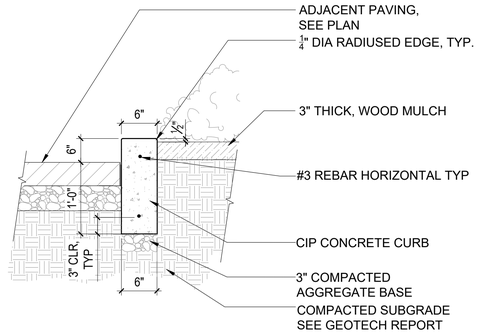

3 CIP CONCRETE PLANTER CURB AT PLAZA

1" = 1'-0" P-HML-321313-13

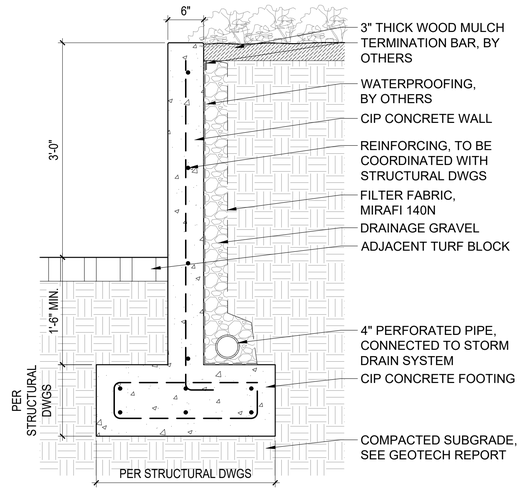

1 CIP CONCRETE PLANTER WALL

1" = 1'-0" P-HML-033376-01

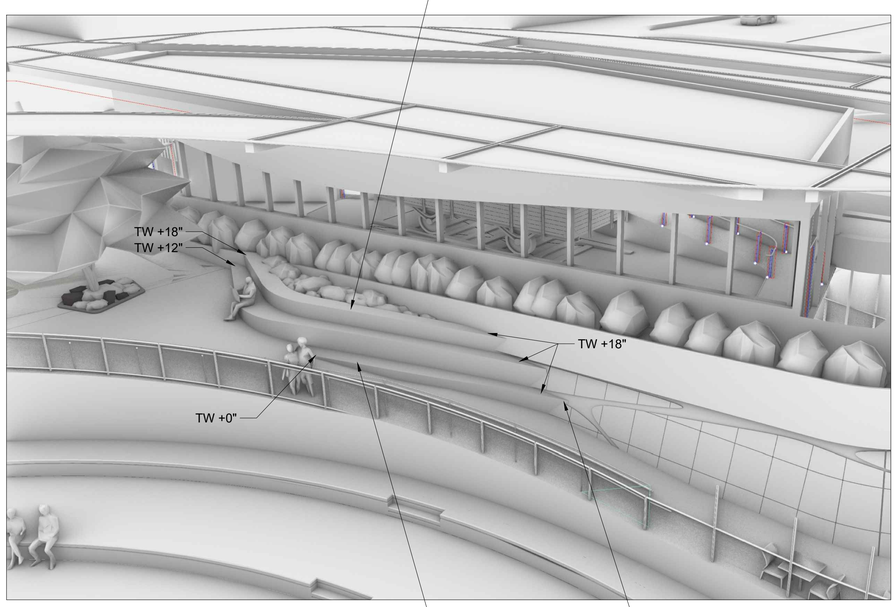

PERSPECTIVE VIEW

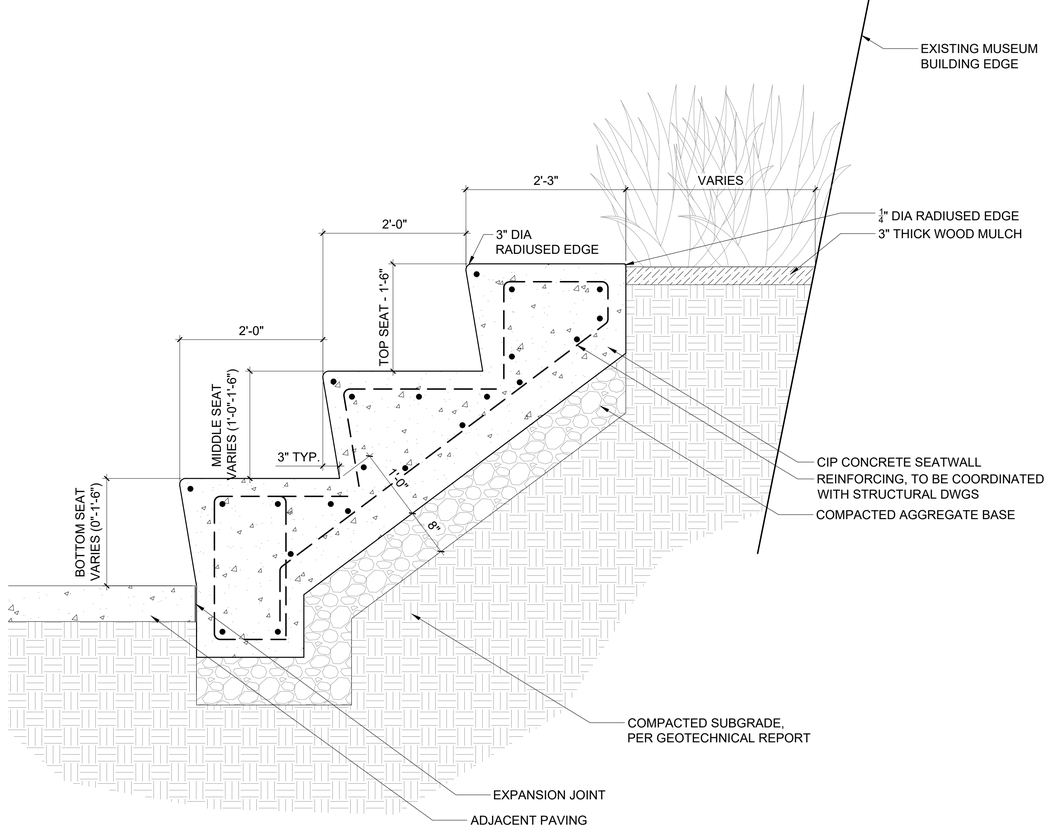

SECTION

2 CIP CONCRETE SEATWALL AT PLAZA

1" = 1'-0" P-HML-033373-01

NOT FOR CONSTRUCTION

18.DEC.2020

ba
belzberg architects
2321 MAIN STREET
SANTA MONICA, CA 90405
310.453.9611
www.belzbergarchitects.com

STUDIO-MLA
251 South Mission Road
Los Angeles, California 90033
T. 213 384 3844 studio-mla.com

#	DESCRIPTION	DATE
25% DD PROGRESS		1/29/21

HOLOCAUST MUSEUM LA EXPANSION

100 THE GROVE DRIVE
LOS ANGELES, CA 90036

CONSTRUCTION DETAILS - WALLS

PROJECT NUMBER: 17009

L610

12/17/2020 12:49:20 AM

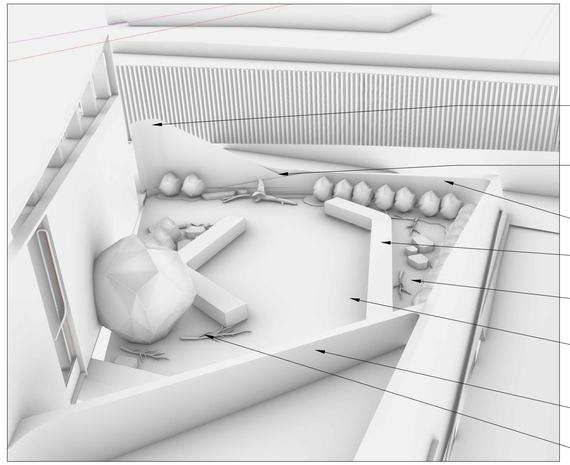

PERSPECTIVE VIEW 1

½" THICK BLACKENED STEEL PLATES, PANEL SIZE TBD, JOINT TBD

METAL WALL TO BE LOCATED DIRECTLY BEHIND EXISTING PLANTER WALL

EXISTING MUSEUM WALL

BENCH AT REFLECTION GARDEN

DECORATIVE GRAVEL AT REFLECTION GARDEN

4 / L601 DECOMPOSED GRANITE WITH STEEL EDGING

EXISTING MUSEUM WALL

A-103

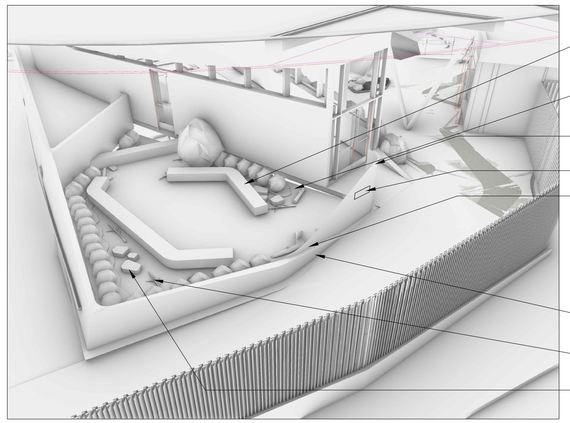

PERSPECTIVE VIEW 2

BENCH AT REFLECTION GARDEN

DECORATIVE GRAVEL AT REFLECTION GARDEN

½" THICK BLACKENED STEEL PLATES, PANEL SIZE TBD, JOINT TBD

DONOR NAME ENGRAVED INTO METAL

METAL WALL TO BE LOCATED DIRECTLY BEHIND EXISTING PLANTER WALL

EXISTING MUSEUM WALL

A-103

6 / L601 BOULDER PLACEMENT

NOTES
DETAIL SHOWN HERE IS FOR DESIGN INTENT ONLY. WATERPROOFING TO BE COORDINATED.
ALL STRUCTURAL CONNECTIONS AND SUPPORTS TO BE COORDINATED.

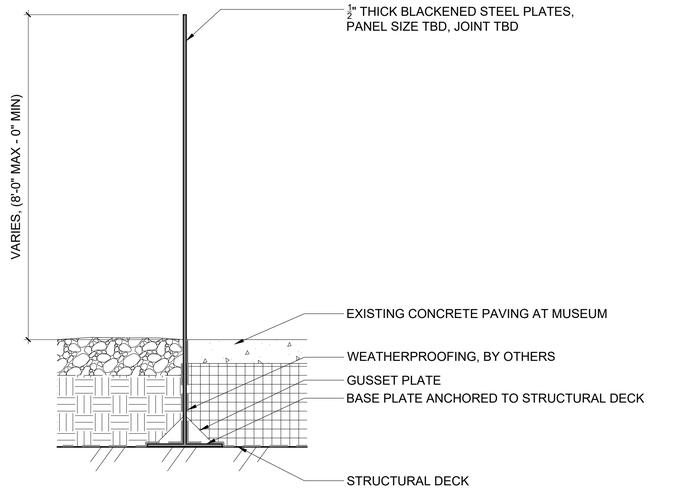

SECTION

1 METAL WALL AT REFLECTION GARDEN

1" = 1'-0"

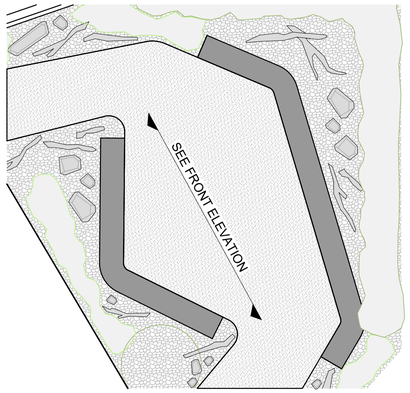

REFLECTION GARDEN ENLARGEMENT
NTS

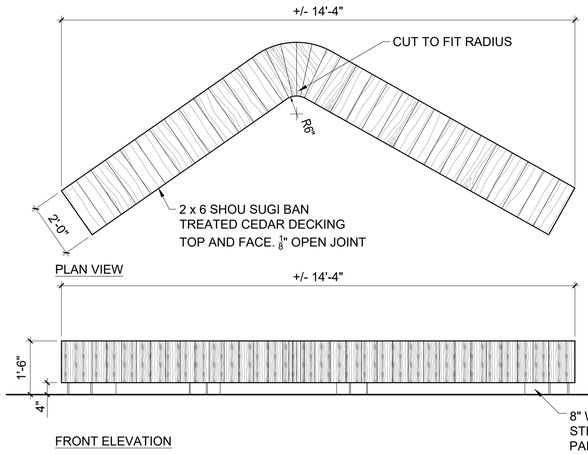

FRONT ELEVATION

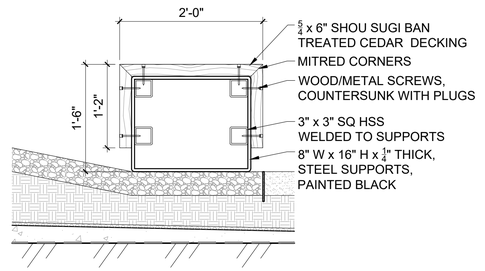

SECTION

2 BENCH AT REFLECTION GARDEN

1" = 1'-0"

P-HML-063016-02

NOT FOR CONSTRUCTION

18.DEC.2020

ba
belzberg architects
2321 MAIN STREET
SANTA MONICA, CA 90405
310.453.9611
www.belzbergarchitects.com

STUDIO-MLA
251 South Mission Road
Los Angeles, California 90033
T. 213 384 3844 studio-mla.com

#	DESCRIPTION	DATE
25% DD PROGRESS		1/29/21

HOLOCAUST MUSEUM LA EXPANSION

100 THE GROVE DRIVE
LOS ANGELES, CA 90036

CONSTRUCTION DETAILS - WALLS

PROJECT NUMBER: 17009

L611

12/17/2020 12:49:20 AM

NOTES:

1. SHOP DRAWINGS TO BE REVIEWED FOR LANDSCAPE ARCHITECT'S APPROVAL PRIOR TO FABRICATION.
2. REFER TO SCHEDULE FOR ALL COLORS, TYPES, AND FINISHES.
3. ALL STEEL TO BE PAINTED WITH HIGH PERFORMANCE PAINT- TNEMEC OR EQUAL.
4. GRIND SMOOTH ALL WELDS AND FILL WITH BONDO TO MAINTAIN CLEAN MONOLITHIC APPEARANCE. WELDS IN TUBE STEEL CORNERS TO BE FLUSH. CONTRACTOR TO INCLUDE BEVELED WELDS IN PRICING TO ASSURE THAT ALL WELDS ARE GROUND SMOOTH. ADDITIONAL WELD PATCH MAY BE NEEDED PENDING SHOP DRAWING REVIEW.
5. CONTRACTOR TO PROVIDE STRUCTURAL REVIEW IN PREPARING SHOP DRAWINGS.
6. PICKET SPACING SHOULD NOT ALLOW A 4" SPHERE TO PASS THROUGH.
7. GATE HARDWARE SPECIFICATIONS TO BE DETERMINED.

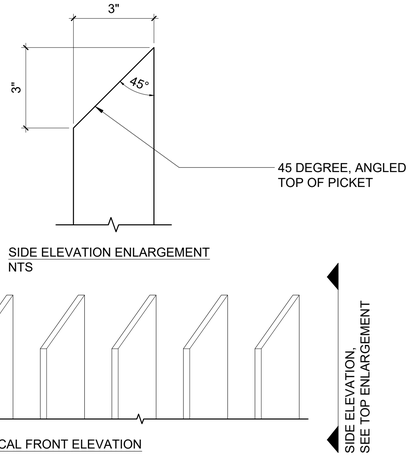

2 PICKET TOP ENLARGEMENT
3" = 1'-0" P-HML-323119-02

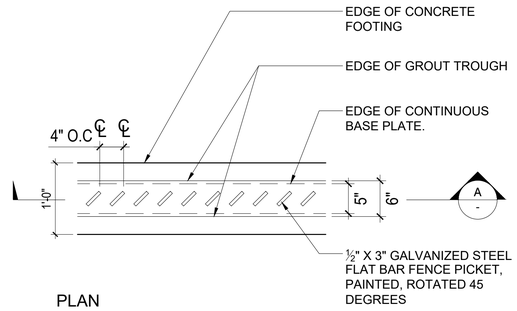

PLAN

NOTES
1. DETAIL SHOWN HERE FOR DESIGN INTENT. ALL COMPONENTS TO BE COORDINATED WITH STRUCTURAL ENGINEER.

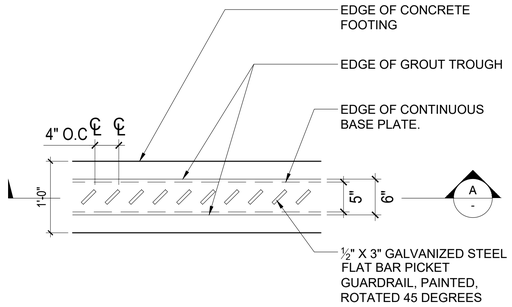

PLAN VIEW

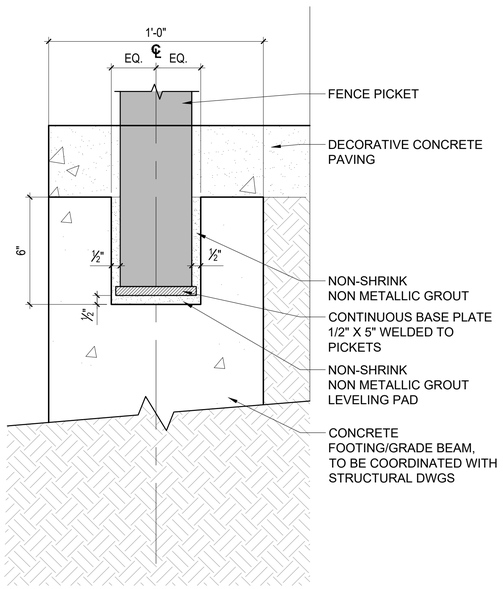

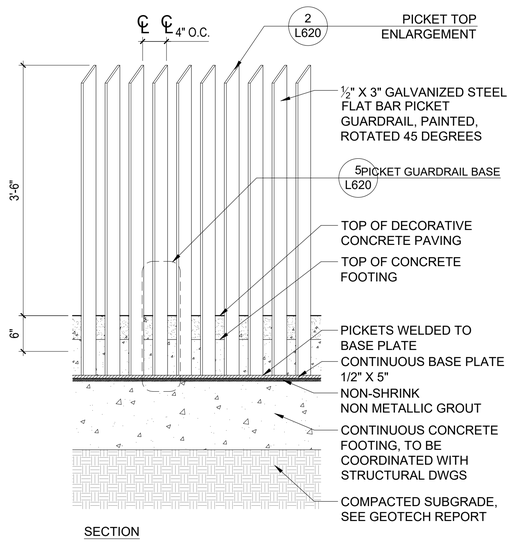

SECTION

5 PICKET GUARDRAIL BASE
3" = 1'-0" P-HML-323119-06

4 PICKET GUARDRAIL
1" = 1'-0" P-HML-323119-07

NOTES
1. DETAIL SHOWN HERE FOR DESIGN INTENT. ALL COMPONENTS TO BE COORDINATED WITH STRUCTURAL ENGINEER.

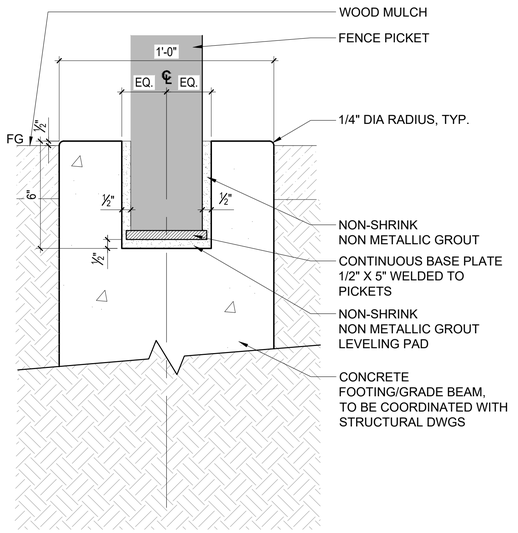

3 SECURITY PICKET FENCE BASE
3" = 1'-0" P-HML-323119-03

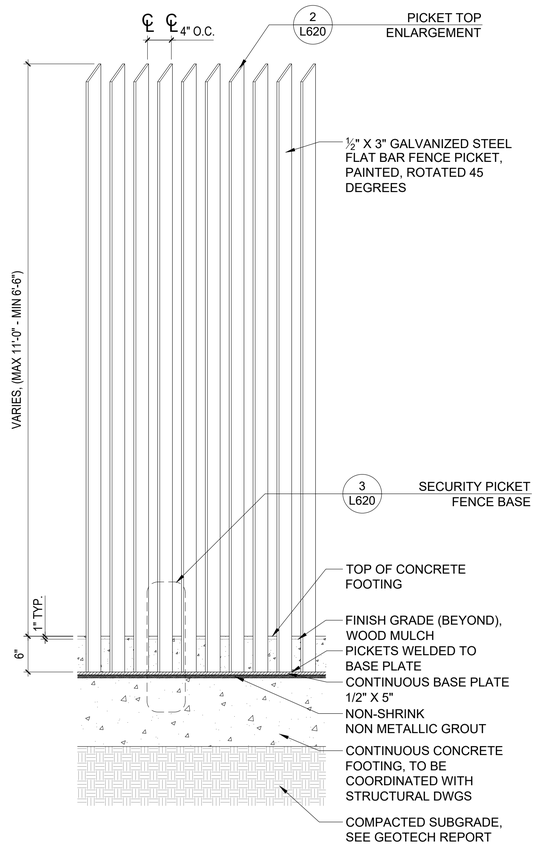

SECTION A

1 SECURITY PICKET FENCE
1" = 1'-0" F-101 P-HML-323119-01

NOT FOR CONSTRUCTION

18.DEC.2020

ba
belzberg architects
2321 MAIN STREET
SANTA MONICA, CA 90405
310.453.9611
www.belzbergarchitects.com

STUDIO-MLA
251 South Mission Road
Los Angeles, California 90033
T. 213 384 3844 studio-mla.com

#	DESCRIPTION	DATE
25% DD	PROGRESS	1/29/21

HOLOCAUST MUSEUM LA EXPANSION

100 THE GROVE DRIVE
LOS ANGELES, CA 90036

CONSTRUCTION DETAILS - FENCES, GATES, AND RAILINGS

PROJECT NUMBER: 17009

L620

12/17/2020 12:49:20 AM

NOTES:

1. SHOP DRAWINGS TO BE REVIEWED FOR LANDSCAPE ARCHITECT'S APPROVAL PRIOR TO FABRICATION.
2. REFER TO SCHEDULE FOR ALL COLORS, TYPES, AND FINISHES.
3. ALL STEEL TO BE PAINTED WITH HIGH PERFORMANCE PAINT- TNEMEC OR EQUAL.
4. GRIND SMOOTH ALL WELDS AND FILL WITH BONDO TO MAINTAIN CLEAN MONOLITHIC APPEARANCE. WELDS IN TUBE STEEL CORNERS TO BE FLUSH. CONTRACTOR TO INCLUDE BEVELED WELDS IN PRICING TO ASSURE THAT ALL WELDS ARE GROUND SMOOTH. ADDITIONAL WELD PATCH MAY BE NEEDED PENDING SHOP DRAWING REVIEW.
5. CONTRACTOR TO PROVIDE STRUCTURAL REVIEW IN PREPARING SHOP DRAWINGS.
6. PICKET SPACING SHOULD NOT ALLOW A 4" SPHERE TO PASS THROUGH.
7. GATE HARDWARE SPECIFICATIONS TO BE DETERMINED.

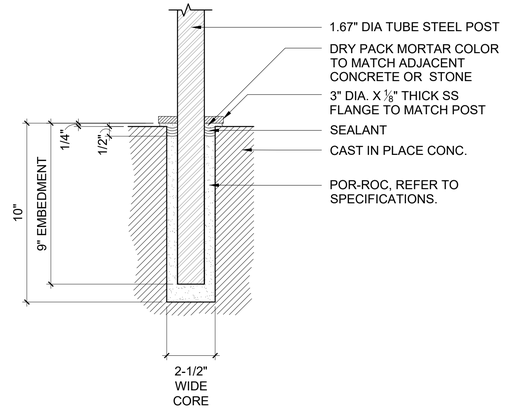

3 HANDRAIL POST EMBEDMENT

3" = 1'-0"

P-HML-055213-02

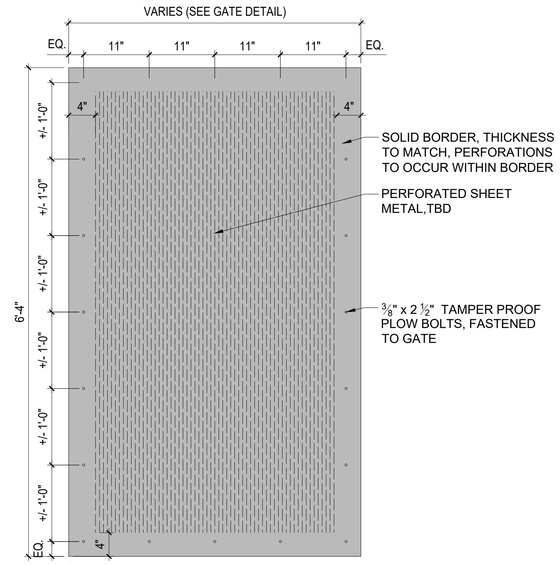

2 PERFORATED SHEET METAL PANELS

1" = 1'-0"

P-HML-323119-05

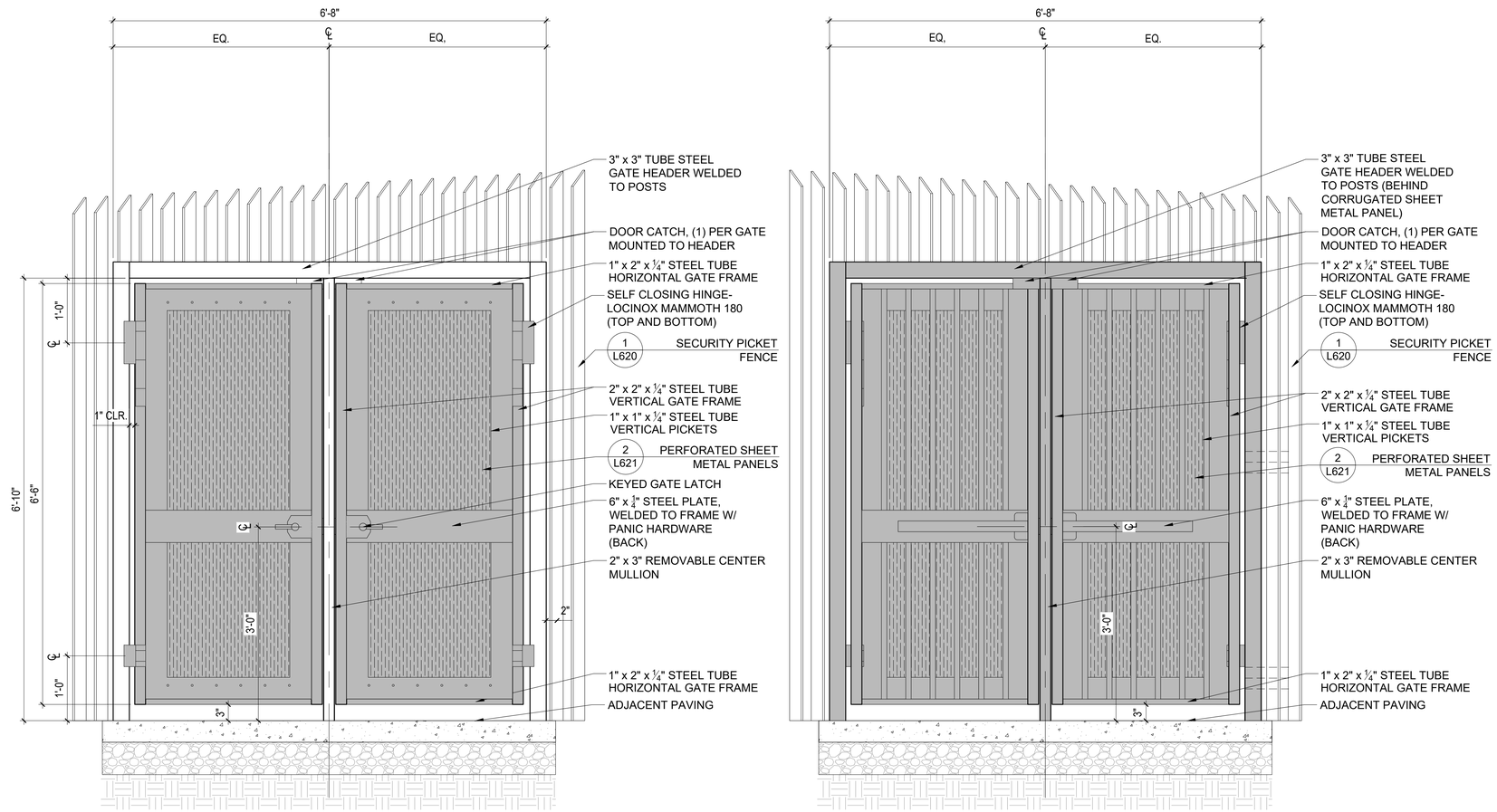

1 GATE AT SECURITY PICKET FENCE

1" = 1'-0" G-101

P-HML-323119-04

NOT FOR CONSTRUCTION

18.DEC.2020

ba
belzberg architects
2321 MAIN STREET
SANTA MONICA, CA 90405
310.453.9611
www.belzbergarchitects.com

STUDIO-MLA
251 South Mission Road
Los Angeles, California 90033
T. 213 384 3844 studio-mla.com

#	DESCRIPTION	DATE
25% DD PROGRESS		1/29/21

HOLOCAUST MUSEUM LA EXPANSION

100 THE GROVE DRIVE
LOS ANGELES, CA 90036

CONSTRUCTION DETAILS - FENCES, GATES, AND RAILINGS

PROJECT NUMBER: 17009

L621

12/17/2020 12:49:20 AM

PRECEDENT IMAGE

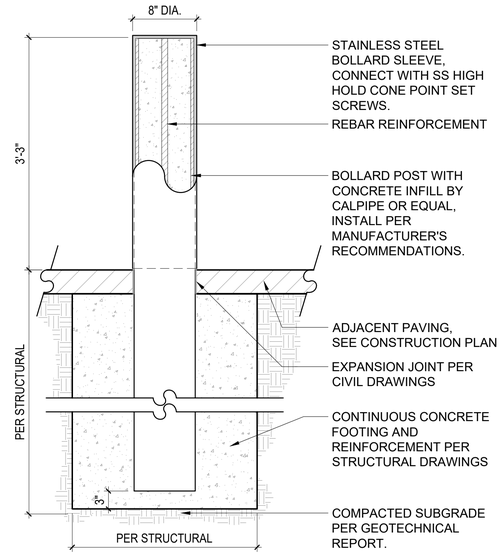

SECTION

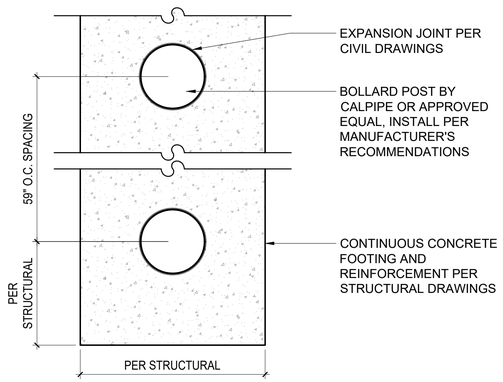

PLAN

1 SECURITY BOLLARD

1" = 1'-0"

P-HML-323913-08

NOT FOR CONSTRUCTION

18.DEC.2020

ba
belzberg architects

2321 MAIN STREET
SANTA MONICA, CA 90405
310.453.9611

www.belzbergarchitects.com

STUDIO-MLA

251 South Mission Road
Los Angeles, California 90033
T. 213 384 3844 studio-mla.com

#	DESCRIPTION	DATE
25% DD PROGRESS		1/29/21

HOLOCAUST MUSEUM LA EXPANSION

100 THE GROVE DRIVE
LOS ANGELES, CA 90036

CONSTRUCTION DETAILS - AMENITIES

PROJECT NUMBER: 17009

L630

12/17/2020 12:45:20 AM

CONCEPT PLANT SCHEDULE

	ROOFTOP PLANTING AREA	4,890 SF		
	ACHILLEA MILLEFOLIUM 'PAPRIKA' / PAPRIKA COMMON YARROW	1,017	1 GAL	20% @ 12" oc
	BACCHARIS PILULARIS 'PIGEON POINT' / PIGEON POINT COYOTE BRUSH	113	5 GAL	20% @ 36" oc
	GALVEZIA SPECIOSA 'FIRECRACKER' / FIRECRACKER ISLAND SNAPDRAGON	113	5 GAL	20% @ 36" oc
	RHAMNUS CALIFORNICA 'MOUND SAN BRUNO' / CALIFORNIA COFFEEBERRY	113	5 GAL	20% @ 36" oc
	SANTOLINA CHAMAECYPARISSUS / LAVENDER COTTON	113	5 GAL	20% @ 36" oc
	PLANTING AREA AT PROPOSED LEARNING CENTER	6,156 SF		
	DIANELLA REVOLUTA 'DR5000' TM / LITTLE REV FLAX LILY	1,422	5 GAL	50% @ 18" oc
	SENECIO FICOIDES 'MOUNT EVEREST' TM / SKYSCRAPER SENECIO	1,422	SIZE	50% @ 18" oc
	EQUITY COURTYARD PLANTING	367 SF		
	OLEA EUROPAEA 'MONTRA' TM / LITTLE OLLIE OLIVE	15	15 GAL	33% @ 36" oc
	PHLOMIS FRUTICOSA 'COMPACT FORM' / JERUSALEM SAGE	15	5 GAL	33% @ 36" oc
	THYMUS LANUGINOSUS / WOOLLY THYME	128	1 GAL	33% @ 12" oc
	PLANTING AREA AT EXISTING SPILLWAY	288 SF		
	MYRTUS COMMUNIS 'COMPACTA' / DWARF MYRTLE	38	SIZE	50% @ 24" oc
	ROSMARINUS OFFICINALIS 'HUNTINGTON CARPET' / HUNTINGTON CARPET ROSEMARY	38	SIZE	50% @ 24" oc
	PLANTING AREA AT AMPHITHEATER	394 SF		
	CARISSA MACROCARPA 'TUTTLEI' / TUTTLE NATAL PLUM	66	5 GAL	30" oc
	PLANTING AREA AT PLAZA	598 SF		
	CORREA X 'DUSKY BELLS' / DUSKY BELLS AUSTALIAN FUCHSIA	78	5 GAL	50% @ 24" oc
	DIANELLA REVOLUTA 'DR5000' TM / LITTLE REV FLAX LILY	78	5 GAL	50% @ 24" oc
	PLANTING AREA AT MARTYR`S MEMORIAL	4,987 SF		
	CORREA X 'DUSKY BELLS' / DUSKY BELLS AUSTALIAN FUCHSIA	144	5 GAL	25% @ 36" oc
	DIANELLA REVOLUTA 'DR5000' TM / LITTLE REV FLAX LILY	144	5 GAL	25% @ 36" oc
	OLEA EUROPAEA 'MONTRA' TM / LITTLE OLLIE OLIVE	144	15 GAL	25% @ 36" oc
	PHLOMIS FRUTICOSA 'COMPACT FORM' / JERUSALEM SAGE	144	5 GAL	25% @ 36" oc

NOTE: ALL PLANTING AREAS TO BE IRRIGATED WITH DRIP IRRIGATION TO BE DEVELOPED IN FUTURE PHASES.

PLANTING QUANTITIES ARE SHOWN FOR COORDINATION PURPOSES. CONTRACTOR TO ENSURE ALL QUANTITIES MATCH PLANS.

PLANT SCHEDULE

TREES	CODE	BOTANICAL / COMMON NAME	CONT		QTY	DETAIL
	BRA PP2	BRACHYCHITON POPULNEUS / KURRAJONG	48" BOX		7	
	OLE MUL	OLEA EUROPAEA / OLIVE MULTI-TRUNK 96" FIELD DUG OLD WORLD OLIVE	96" BOX		1	
	QUE AGR	QUERCUS AGRIFOLIA / COAST LIVE OAK	60" BOX		1	
	TRI EL2	TRISTANIA LAURINA 'ELEGANT' / ELEGANT WATER GUM	48" BOX		10	

PLANTING NOTES

1. DRAWING IS DIAGRAMMATIC. VERIFY ALL LOCATIONS AND CONDITIONS ON SITE. COUNT ALL PLANT MATERIAL BEFORE BIDDING.
2. INSPECT ALL EXISTING CONDITIONS ON SITE AND LOCATE ALL EXISTING UTILITIES BEFORE CONSTRUCTION BEGINS. ALL TREE STAKING LOCATIONS TO BE APPROVED BY LANDSCAPE ARCHITECT PRIOR TO ANY DIGGING.
3. CONTRACTOR TO REPAIR AT THEIR OWN EXPENSE ALL PROPERTY DAMAGE WHICH OCCURS DURING PROJECT INSTALLATION.
4. NOTE ADDITIONAL REMARKS ON SPECIFIC PLANTS IN PLANT LIST.
5. ALL EXISTING PLANT MATERIAL TO BE REMOVED EXCEPT WHERE NOTED ON PLAN.
6. ALL PLANT MATERIAL TO BE GUARANTEED FOR 90 DAYS FROM THE DATE OF ACCEPTANCE BY OWNER. CONTRACTOR SHALL STORE PLANT MATERIAL IN SHADE AND PROTECT FROM SUN. ENSURE ON SITE WATERING PRIOR TO PLANTING.
7. FINISH GRADE TO BE 1" BELOW ALL WALKS, CURBS, AND PAVING.
8. ALL PLANTED AREAS SHALL RECEIVE THE FOLLOWING AMENDMENTS PER 1,000 SQ. FT. OF SURFACE AREA. ROTO-TILL AMENDMENTS TO A DEPTH OF 6"
   *150 LBS. GRO-POWER
   *ADD 8 LBS OF GRO-P0WER CONTROLLED RELEASE 12-8-8 PER CU YD OF MIX.
9. PLANT HOLE TO BE TWICE AS WIDE AS THE PLANT ROOT BALL. BACKFILL AND COMPACT TO 80% WITH 60% SOIL OF SITE AND 40% FIR BARK, UNLESS OTHERWISE NOTED. PROVIDE GRO-POWER PLANT TABLETS AT THE FOLLOWING RATES:
   1 GAL 2
   5 GAL 5
   15 GAL 10
   24" BOX AND UP 14
   PLACE RECOMMENDED TABLETS BETWEEN THE BOTTOM AND THE TOP OF THE ROOT BALL BUT NO HIGHER THAN 1/3 OF THE WAY UP TO THE TOP OF THE ROOT BALL. SPACE TABLETS EQUALLY AROUND THE PERIMETER OF THE ROOT BALL APPROXIMATELY 2" FROM THE ROOT TIPS.
10. "DEEP ROOT" BARRIERS ARE TO BE USED AROUND ALL TREES LOCATED WITHIN 5 FT. OF PAVING. INSTALL PER MANUFACTURER'S SPECIFICATIONS. CONTRACTOR SHALL REMOVE ALL NURSERY STAKES AFTER PLANTING.
11. ALL PROPOSED SHRUB AND GROUND COVER AREAS ARE TO BE TREATED WITH A PRE-EMERGENT WEED KILLER (EPTAM / RONSTAR). APPLY PER MANUFACTURER'S SPECIFICATIONS:
    A) IMMEDIATELY AFTER PLANTING,
    B) AT THE BEGINNING OF THE MAINTENANCE PERIOD, AND
    C) AT THE END OF THE MAINTENANCE PERIOD.
12. ALL PLANTING AREAS TO BE TOP DRESSED WITH MULCH PER SPECIFICATIONS.
13. INSTALL AND MAINTAIN LANDSCAPE PLANTING IN ACCORDANCE WITH THE GOVERNING AGENCY'S GUIDELINES AND SPECIFICATIONS UNLESS NOTED OTHERWISE IN THESE NOTES OR ON THE PLANS.

NOT FOR CONSTRUCTION

18.DEC.2020

ba
belzberg architects
2321 MAIN STREET
SANTA MONICA, CA 90405
310.453.9611
www.belzbergarchitects.com

STUDIO-MLA
251 South Mission Road
Los Angeles, California 90033
T. 213 384 3844 studio-mla.com

#	DESCRIPTION	DATE
25%	DD PROGRESS	1/29/21

HOLOCAUST MUSEUM LA EXPANSION

100 THE GROVE DRIVE
LOS ANGELES, CA 90036

PLANTING LEGENDS AND NOTES

PROJECT NUMBER: 17009

L800A

12/17/2020 12:48:20 AM

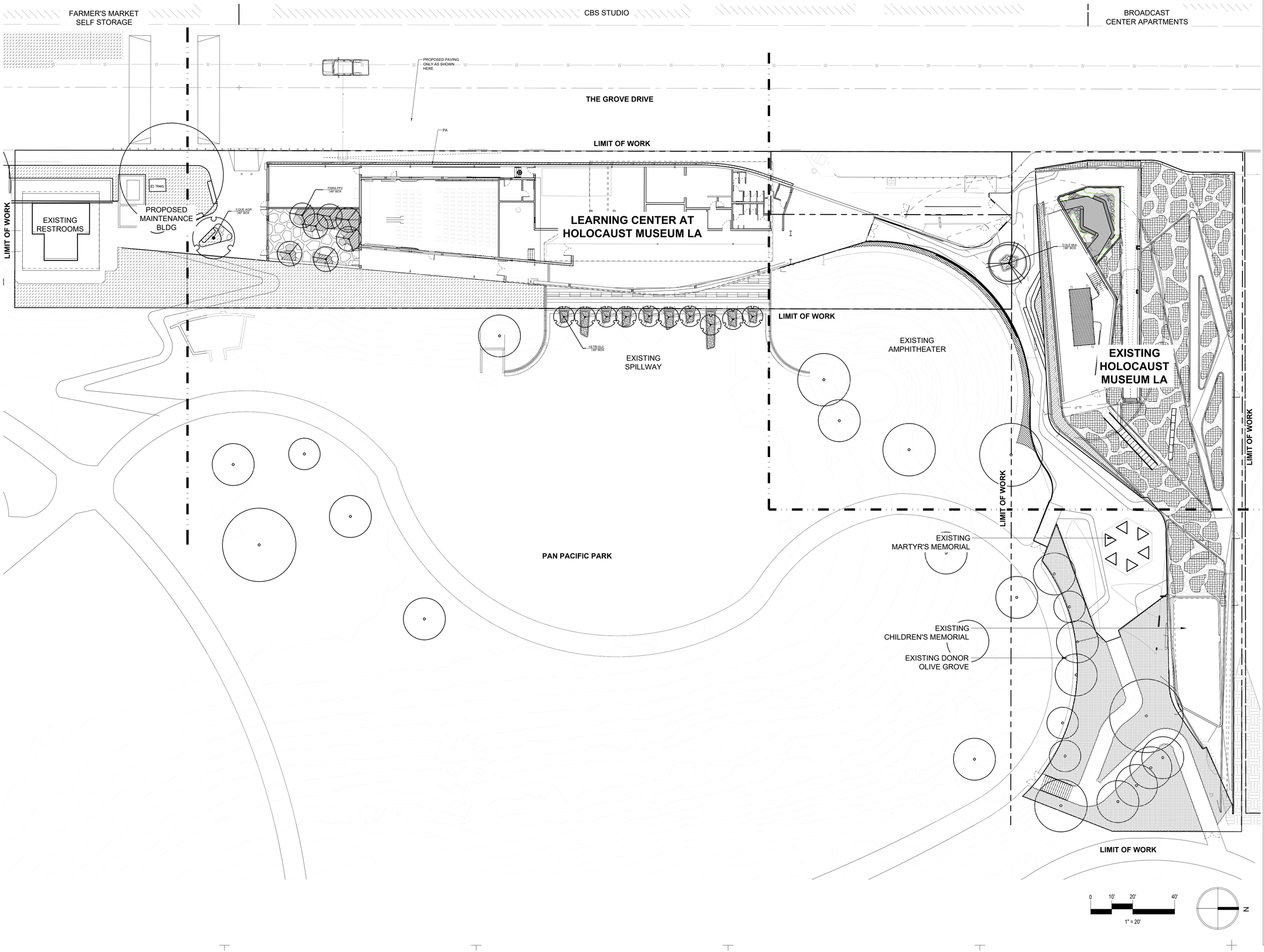

NOT FOR CONSTRUCTION

18.DEC.2020

ba
belzberg architects
2321 MAIN STREET
SANTA MONICA, CA 90405
310.453.9611
www.belzbergarchitects.com

STUDIO-MLA
251 South Mission Road
Los Angeles, California 90033
T. 213 384 3844 studio-mla.com

#	DESCRIPTION	DATE
25% DD PROGRESS		1/29/21

HOLOCAUST
MUSEUM LA
EXPANSION

100 THE GROVE DRIVE
LOS ANGELES, CA 90036

OVERALL
PLANTING PLAN

PROJECT NUMBER: 17009

L800B

12/17/2020 12:49:20 AM

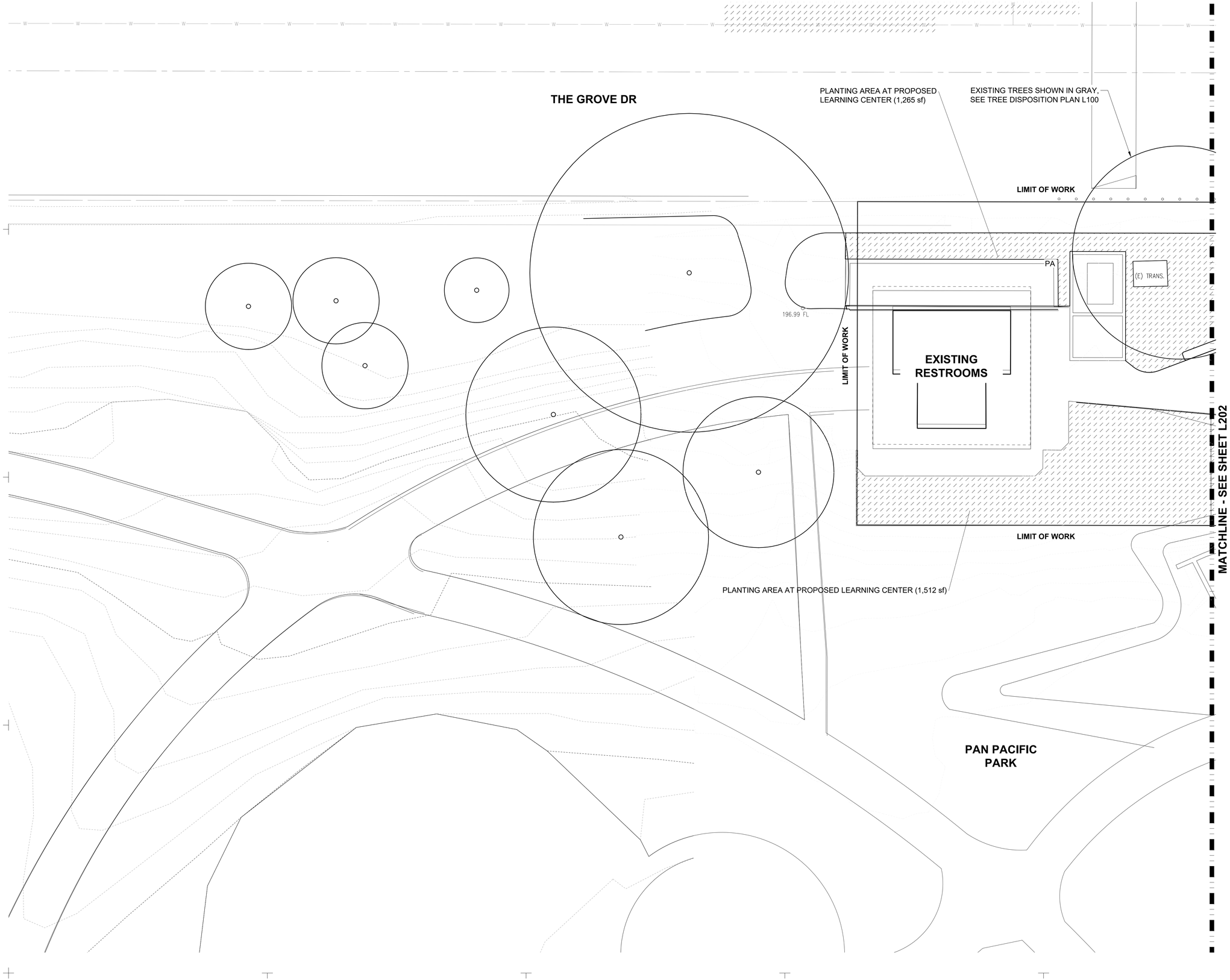

NOT FOR CONSTRUCTION

18.DEC.2020

ba
belzberg architects
2321 MAIN STREET
SANTA MONICA, CA 90405
310.453.9611
www.belzbergarchitects.com

STUDIO-MLA
251 South Mission Road
Los Angeles, California 90033
T. 213 384 3844 studio-mla.com

#	DESCRIPTION	DATE
25%	DD PROGRESS	1/29/21

HOLOCAUST MUSEUM LA EXPANSION

100 THE GROVE DRIVE
LOS ANGELES, CA 90036

KEY PLAN

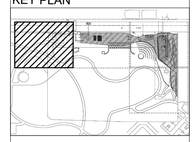

PLANTING PLAN

PROJECT NUMBER: 17009

L801

12/17/2020 12:48:20 AM

WOONERF, FOR FURTHER DEVELOPMENT

PROPOSED PAVING ONLY AS SHOWN HERE

THE GROVE DRIVE

PLANTING AREA AT PROPOSED LEARNING CENTER (266 sf)

PA

LIMIT OF WORK

PA

MECHANICAL YARD

7| BRA PP2
48" BOX

1| QUE AGR
60" BOX

LEARNING CENTER AT HOLOCAUST MUSEUM LA

MATCHLINE - SEE SHEET L201

MATCHLINE - SEE SHEET L203

LIMIT OF WORK

REMOVED FROM SCOPE

EQUITY COURTYARD PLANTING (367 sf)

OSED LEARNING CENTER (3,113 sf)

REMOVED FROM SCOPE

10| TRI EL2
48" BOX

EXISTING SITE TO REMAIN

EXISTING TREES SHOWN IN GRAY, SEE TREE DISPOSITION PLAN L100

EXISTING SPILLWAY

PAN PACIFIC PARK

N

0 15' 30' 60'

1" = 30'

NOT FOR CONSTRUCTION

18.DEC.2020

belzberg architects

2321 MAIN STREET
SANTA MONICA, CA 90405
310.453.9611

www.belzbergarchitects.com

STUDIO-MLA

251 South Mission Road
Los Angeles, California 90033
T. 213 384 3844 studio-mla.com

#	DESCRIPTION	DATE
25% DD PROGRESS		1/29/21

HOLOCAUST MUSEUM LA EXPANSION

100 THE GROVE DRIVE
LOS ANGELES, CA 90036

KEY PLAN

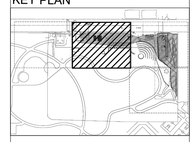

PLANTING PLAN

PROJECT NUMBER: 17009

L802

12/17/2020 12:49:20 AM

CROSSWALK

THE GROVE DR

BUS LOADING/UNLOADING ZONE

LIMIT OF WORK

P-303

SECURITY

GIFT SHOP

REFLECTION GARDEN UNDER DEVELOPMENT

2 L401

1 OLE MUL 96" BOX

PA

ROOFTOP PLANTING AREA (4,315 sf)

P-303

RAMP INTO LEARNING CENTER

PROPOSED CANOPY, SEE ARCH DWGS

PROPOSED CANOPY OPENING, SEE ARCH DWGS

PLANTNG AREA AT PLAZA (41 sf)

LIMIT OF WORK

BOXCAR PAVILION

US POST OFFICE

PLANTING AREA AT PLAZA (505 sf)

PLANTING AREA AT PLAZA (52 sf)

PA

LIMIT OF WORK

MATCHLINE - SEE SHEET L202

EXISTING SITE TO REMAIN

EXISTING AMPHITHEATER

PLANTING AREA AT AMPHITHEATER (394 sf)

LIMIT OF WORK

P-303

EXISTING TREES SHOWN IN GRAY, SEE TREE DISPOSITION PLAN L100

EXISTING PLANTING AREA TO REMAIN

MATCHLINE - SEE SHEET L204

N

0 5' 10' 20'

1" = 10'

NOT FOR CONSTRUCTION

18.DEC.2020

ba
belzberg architects

2321 MAIN STREET
SANTA MONICA, CA 90405
310.453.9611

www.belzbergarchitects.com

STUDIO-MLA

251 South Mission Road
Los Angeles, California 90033
T. 213 384 3844 studio-mla.com

#	DESCRIPTION	DATE
25% DD PROGRESS		1/29/21

HOLOCAUST MUSEUM LA EXPANSION

100 THE GROVE DRIVE
LOS ANGELES, CA 90036

KEY PLAN

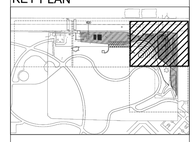

PLANTING PLAN

PROJECT NUMBER: 17009

L803

12/17/2020 12:49:20 AM

MATCHLINE - SEE SHEET L203

MARTYR'S MEMORIAL

PA

PA

ROOFTOP PLANTING AREA (575 sf)

P-303

EXISTING PLANTING AREA TO REMAIN

LIMIT OF WORK

US POST OFFICE

LIMIT OF WORK

CHILDREN'S MEMORIAL

PROPOSED ARCHITECTURAL CANOPY, SEE ARCH DWGS

PAN PACIFIC PARK

EXISTING TREES SHOWN IN GRAY, SEE TREE DISPOSITION PLAN L100

PLANTING AREA AT MARTYR`S MEMORIAL (1,726 sf)

PLANTING AREA AT MARTYR`S MEMORIAL (1,232 sf)

LIMIT OF WORK

PLANTING AREA AT MARTYR`S MEMORIAL (1,532 sf)

N

0 15' 30' 60'

1" = 30'

NOT FOR CONSTRUCTION

18.DEC.2020

ba
belzberg architects
2321 MAIN STREET
SANTA MONICA, CA 90405
310.453.9611
www.belzbergarchitects.com

STUDIO-MLA
251 South Mission Road
Los Angeles, California 90033
T. 213 384 3844 studio-mla.com

#	DESCRIPTION	DATE
	25% DD PROGRESS	1/29/21

HOLOCAUST MUSEUM LA EXPANSION

100 THE GROVE DRIVE
LOS ANGELES, CA 90036

KEY PLAN

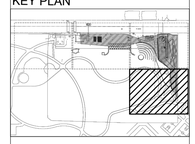

PLANTING PLAN

PROJECT NUMBER: 17009

L804

12/17/2020 12:45:20 AM

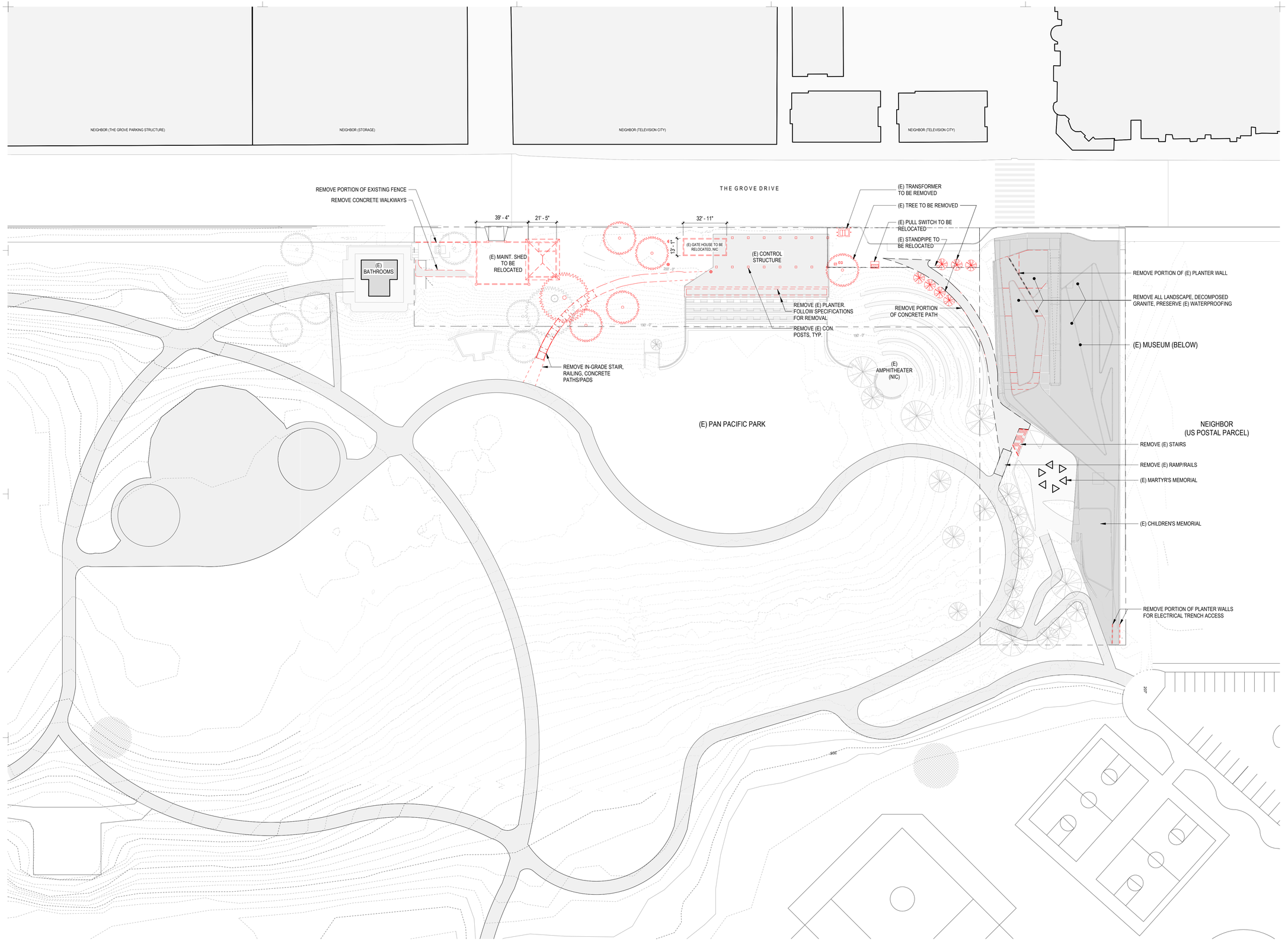

SITE PLAN (DEMO) 1
SCALE: 1/32" = 1'-0"
NORTH

NOT FOR CONSTRUCTION

17.NOV.2021

ba
belzberg architects
2740 MAIN STREET
SANTA MONICA, CA 90405
310.453.9611
www.belzbergarchitects.com

#	DESCRIPTION	DATE

HOLOCAUST MUSEUM LA EXPANSION

100 THE GROVE DRIVE
LOS ANGELES, CA 90036

DEMO PLAN

PROJECT NUMBER: 17009

A100

11/18/2021 11:48:19 AM

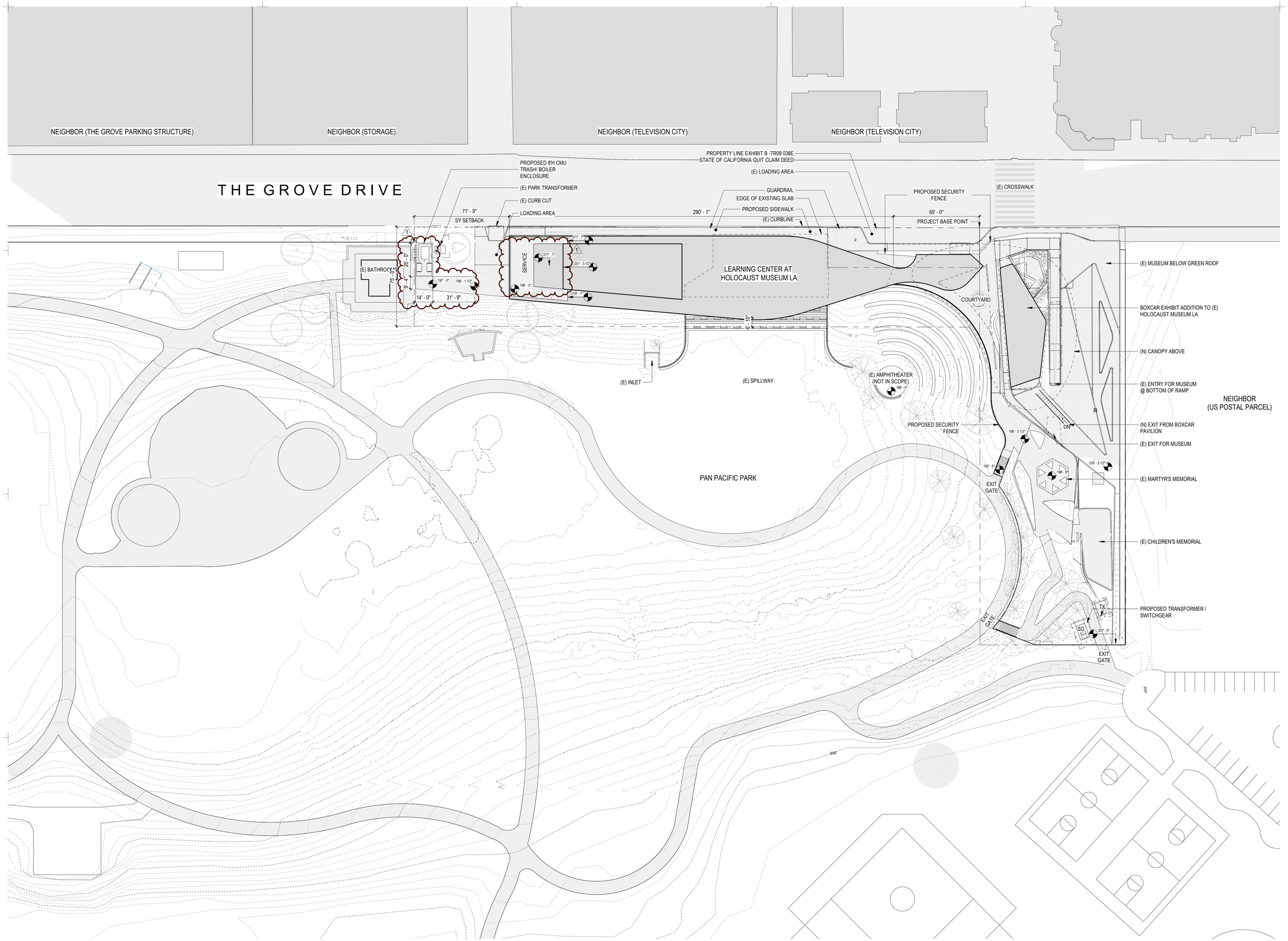

SITE PLAN 1
SCALE: 1/32" = 1'-0"
NORTH

NOT FOR CONSTRUCTION

17.NOV.2021
100% DESIGN SUBMITTAL

belzberg architects
2740 MAIN STREET
SANTA MONICA, CA 90405
310.453.9611

www.belzbergarchitects.com

#	DESCRIPTION	DATE
1	P.C. VERIF 1	12/10/2021

HOLOCAUST MUSEUM LA EXPANSION

100 THE GROVE DRIVE
LOS ANGELES, CA 90036

SITE PLAN

PROJECT NUMBER: 17009

A110

11/18/2021 11:49:46 AM

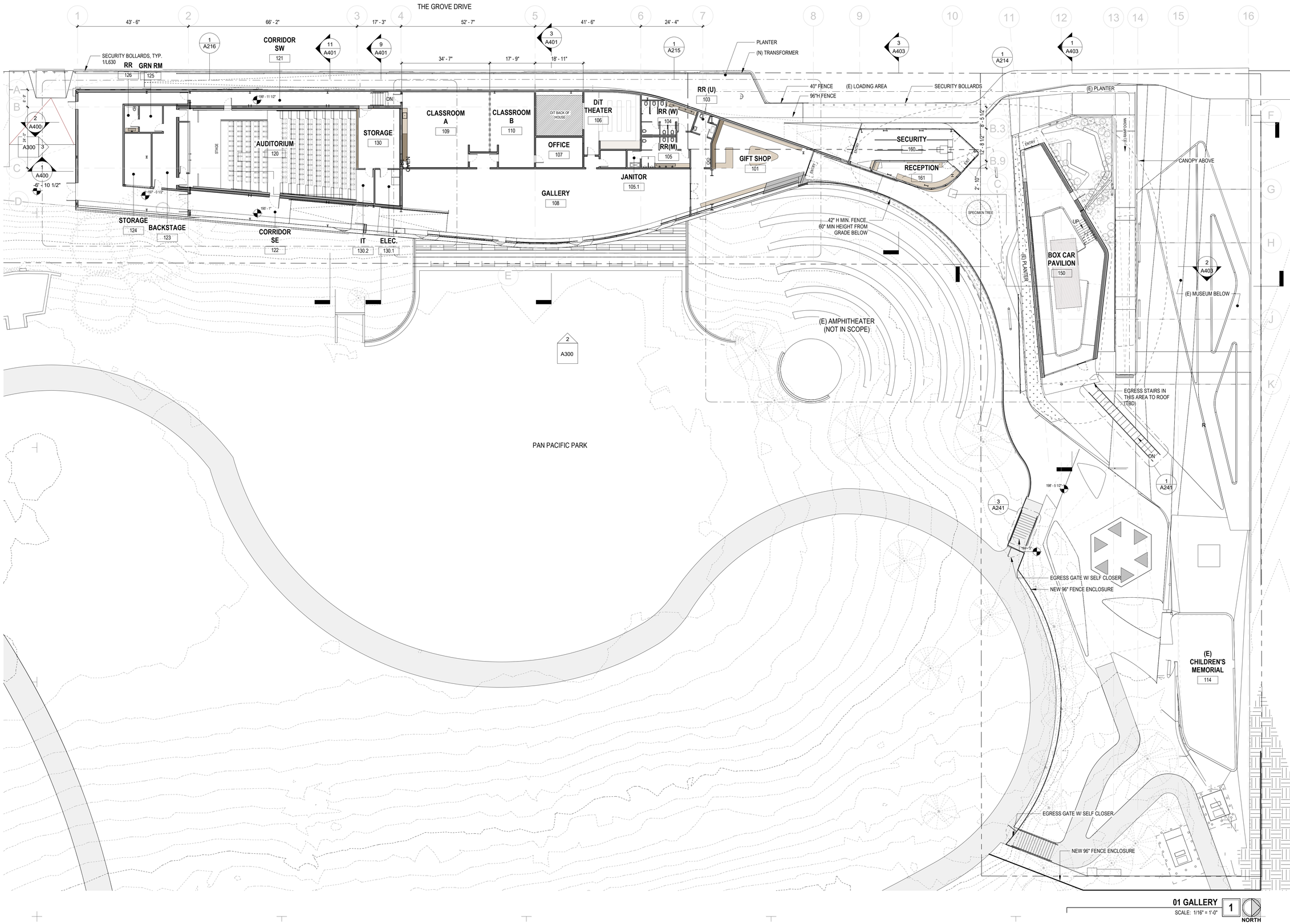

01 GALLERY 1
SCALE: 1/16" = 1'-0"

NORTH

NOT FOR CONSTRUCTION

17.NOV.2021
100% DESIGN SUBMITTAL

ba
belzberg architects
2740 MAIN STREET
SANTA MONICA, CA 90405
310.453.9611
www.belzbergarchitects.com

#	DESCRIPTION	DATE

HOLOCAUST MUSEUM LA EXPANSION

100 THE GROVE DRIVE
LOS ANGELES, CA 90036

FLOOR PLAN - OVERALL

PROJECT NUMBER: 17009

A211

11/18/2021 11:50:47 AM

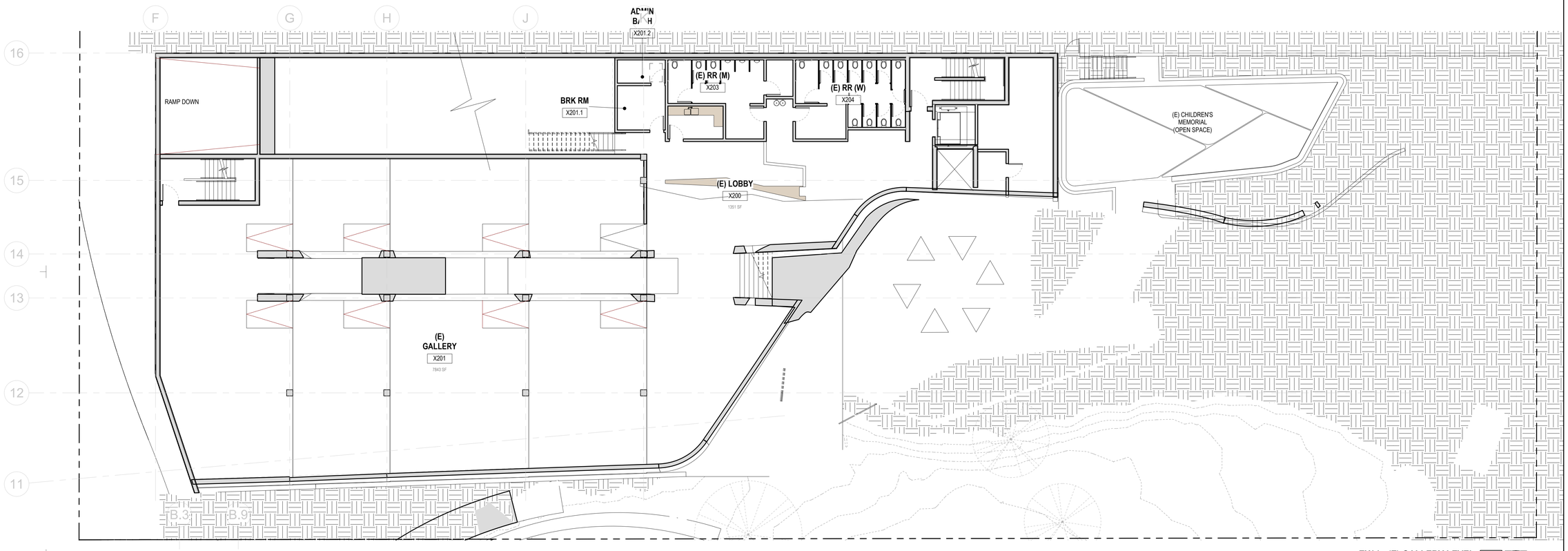

EX01 - (E) GALLERY LEVEL 2
SCALE: 3/32" = 1'-0"

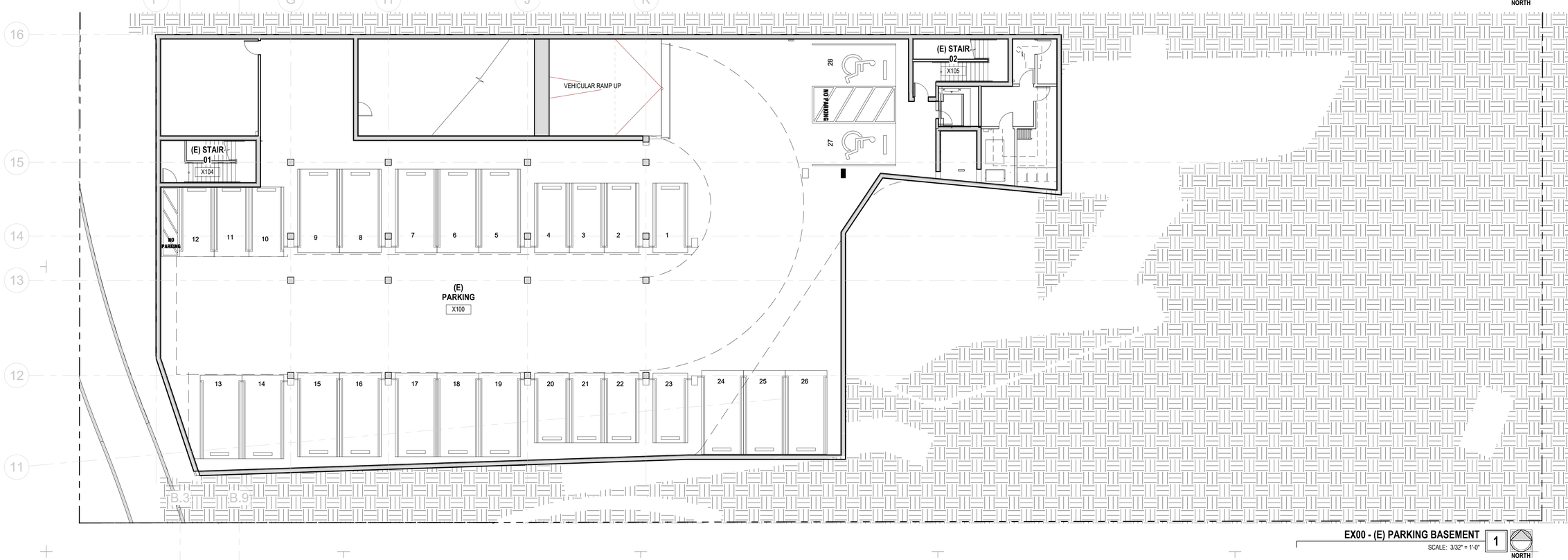

EX00 - (E) PARKING BASEMENT 1
SCALE: 3/32" = 1'-0"

NORTH

NOT FOR CONSTRUCTION

17.NOV.2021
100% DESIGN SUBMITTAL

belzberg architects
2740 MAIN STREET
SANTA MONICA, CA 90405
310.453.9611
www.belzbergarchitects.com

#	DESCRIPTION	DATE

HOLOCAUST MUSEUM LA EXPANSION

100 THE GROVE DRIVE
LOS ANGELES, CA 90036

FLOOR PLANS - EXISTING MUSEUM

PROJECT NUMBER: 17009

A212

11/18/2021 11:50:54 AM

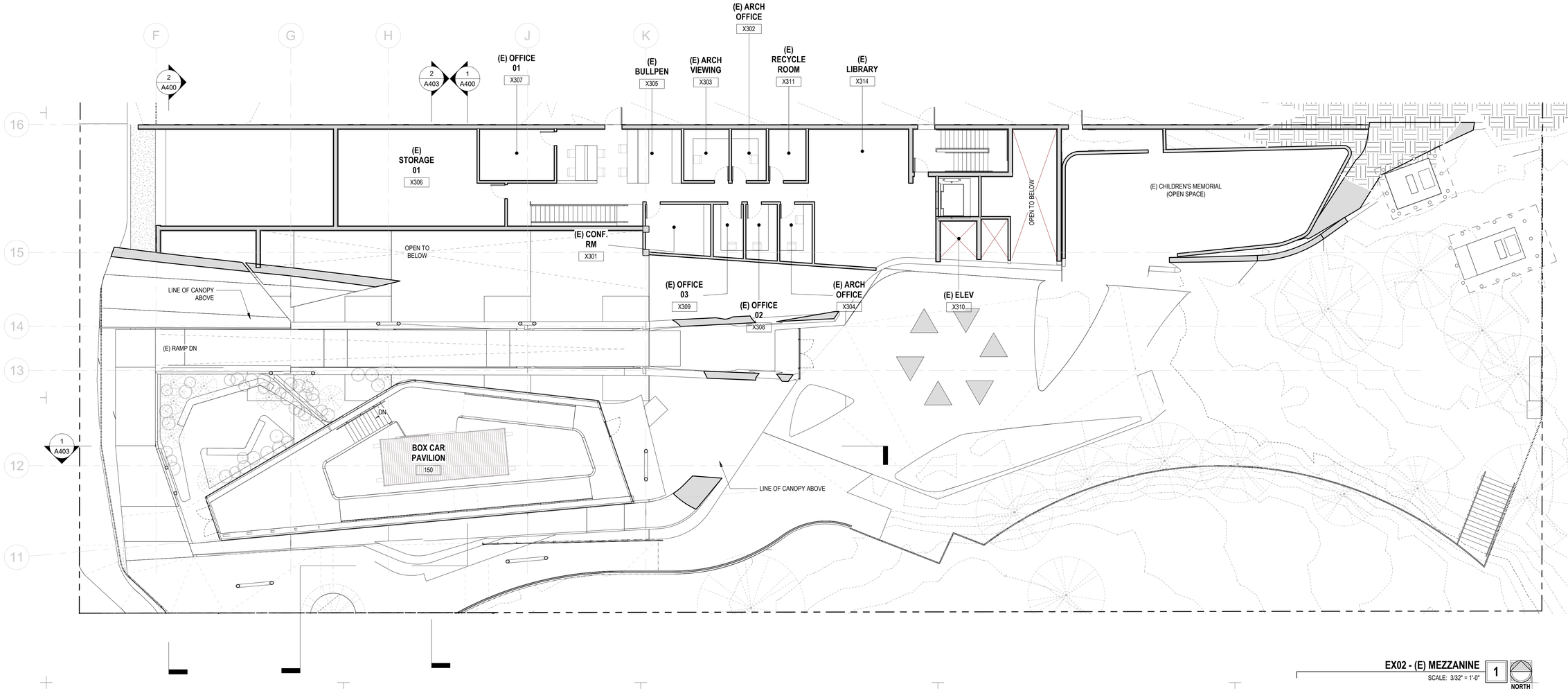

EX02 - (E) MEZZANINE

SCALE: 3/32" = 1'-0"

1

NORTH

NOT FOR CONSTRUCTION

17.NOV.2021
100% DESIGN SUBMITTAL

ba
belzberg architects
2740 MAIN STREET
SANTA MONICA, CA 90405
310.453.9611
www.belzbergarchitects.com

#	DESCRIPTION	DATE

HOLOCAUST
MUSEUM LA
EXPANSION

100 THE GROVE DRIVE
LOS ANGELES, CA 90036

FLOOR PLANS -
EXISTING MUSEUM

PROJECT NUMBER: 17009

A213

11/18/2021 11:30:57 AM

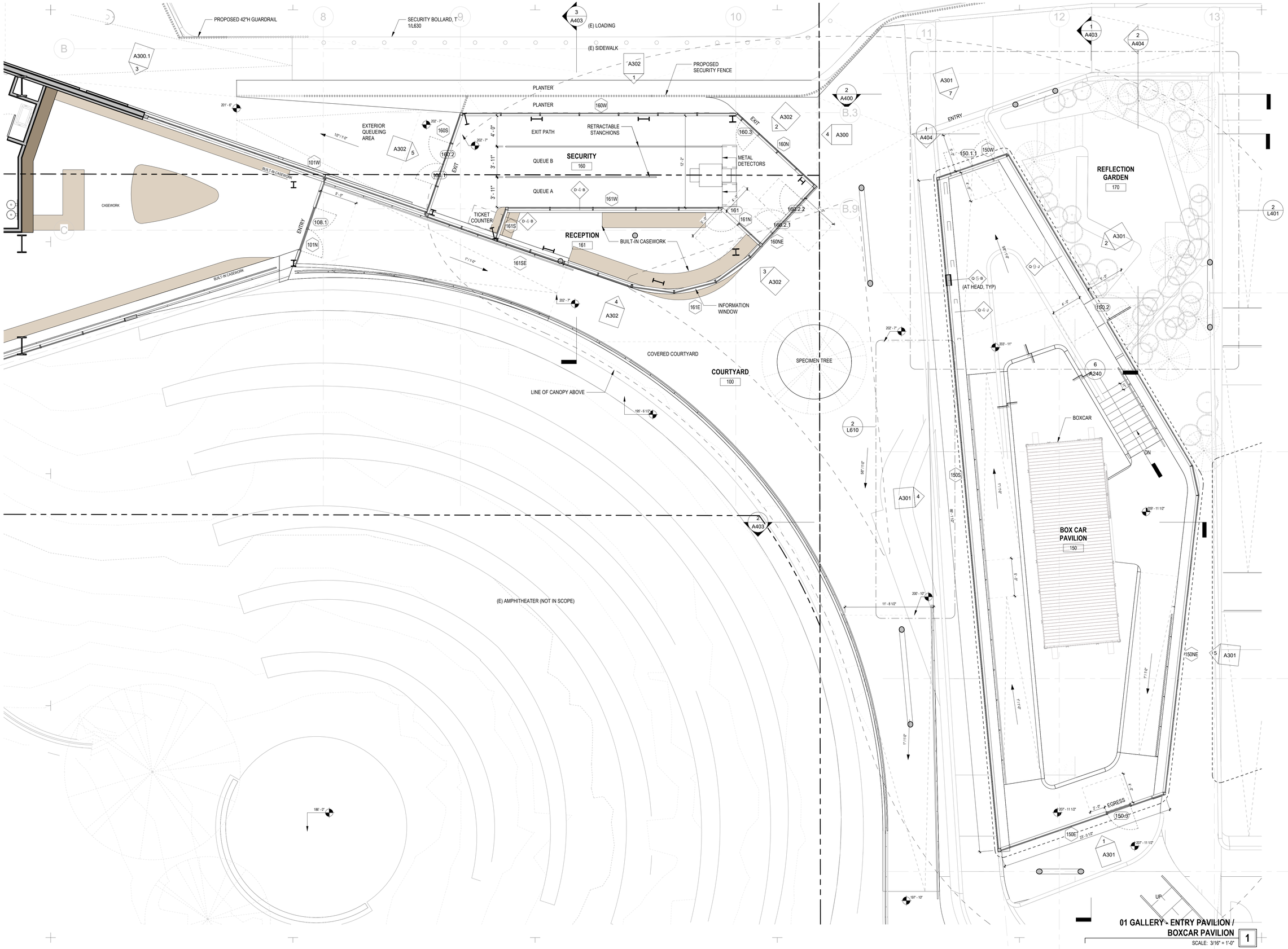

NOT FOR CONSTRUCTION

17.NOV.2021
100% DESIGN SUBMITTAL

belzberg architects
2740 MAIN STREET
SANTA MONICA, CA 90405
310.453.9611
www.belzbergarchitects.com

#	DESCRIPTION	DATE

HOLOCAUST MUSEUM LA EXPANSION

100 THE GROVE DRIVE
LOS ANGELES, CA 90036

FLOOR PLANS - ENTRY PAVILION, BOX CAR PAVILION

PROJECT NUMBER: 17009

A214

11/18/2021 11:32:04 AM

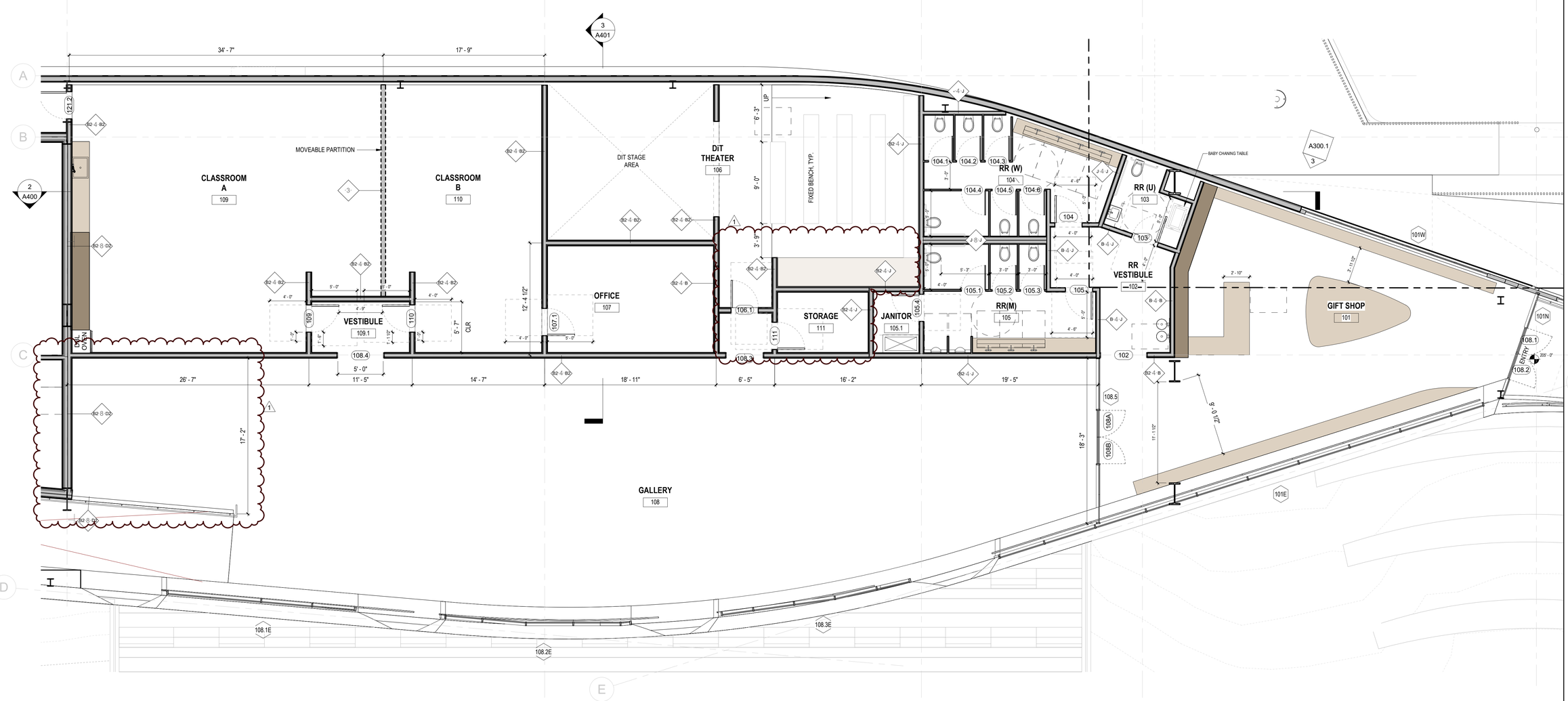

01 GALLERY - NORTH 1

SCALE: 3/16" = 1'-0"

NOT FOR CONSTRUCTION

17.NOV.2021
100% DESIGN SUBMITTAL

ba
belzberg architects
2740 MAIN STREET
SANTA MONICA, CA 90405
310.453.9611
www.belzbergarchitects.com

#	DESCRIPTION	DATE
1	P.C. VERIF 1	12/10/2021

HOLOCAUST MUSEUM LA EXPANSION

100 THE GROVE DRIVE
LOS ANGELES, CA 90036

FLOOR PLANS - NORTH

PROJECT NUMBER: 17009

A215

11/18/2021 11:52:07 AM

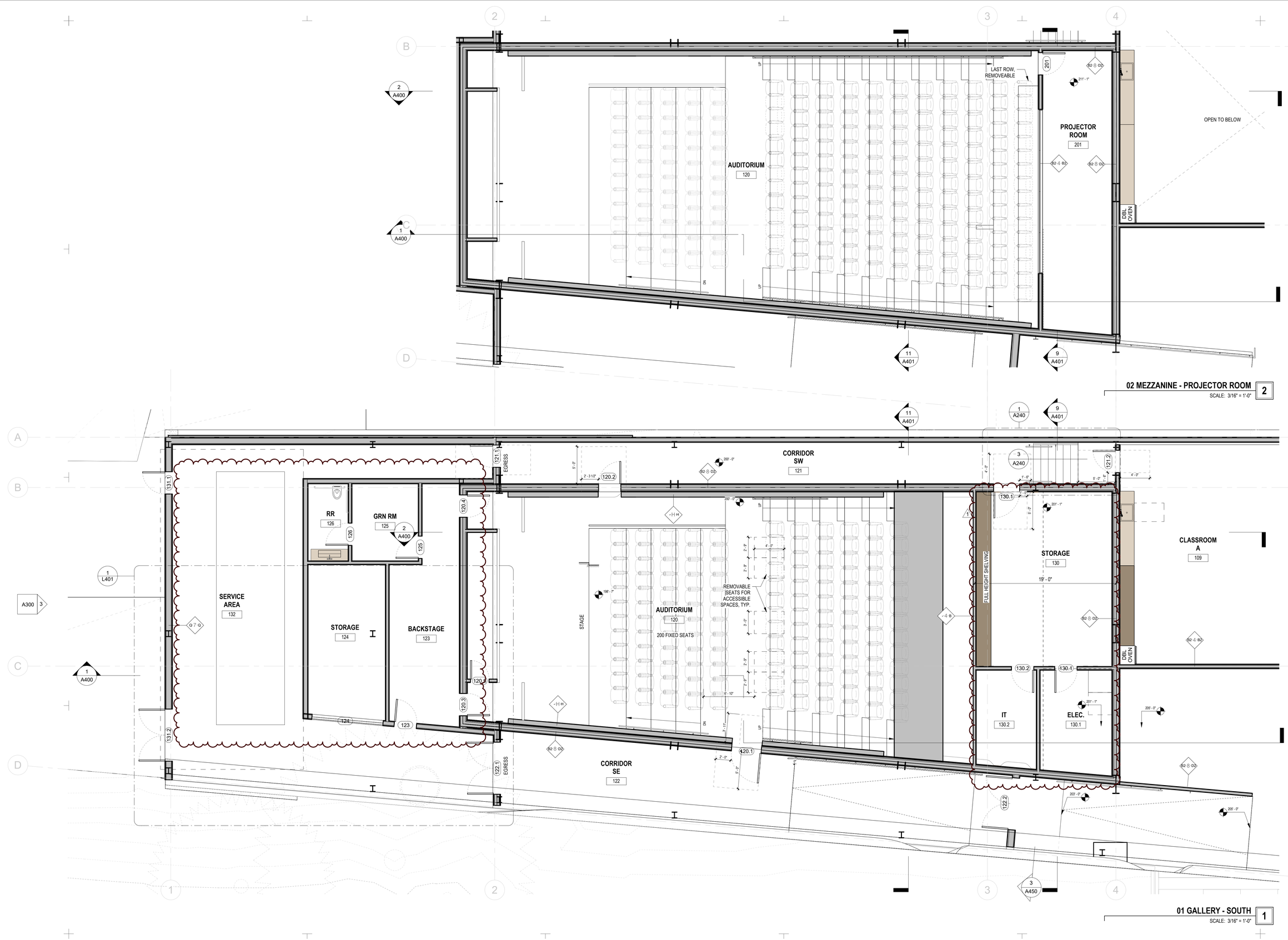

02 MEZZANINE - PROJECTOR ROOM 2

SCALE: 3/16" = 1'-0"

01 GALLERY - SOUTH 1

SCALE: 3/16" = 1'-0"

NOT FOR CONSTRUCTION

17.NOV.2021
100% DESIGN SUBMITTAL

belzberg architects
2740 MAIN STREET
SANTA MONICA, CA 90405
310.453.9611
www.belzbergarchitects.com

#	DESCRIPTION	DATE
1	P.C. VERIF 1	12/10/2021

HOLOCAUST MUSEUM LA EXPANSION

100 THE GROVE DRIVE
LOS ANGELES, CA 90036

FLOOR PLANS - SOUTH

PROJECT NUMBER: 17009

A216

11/18/2021 11:52:14 AM

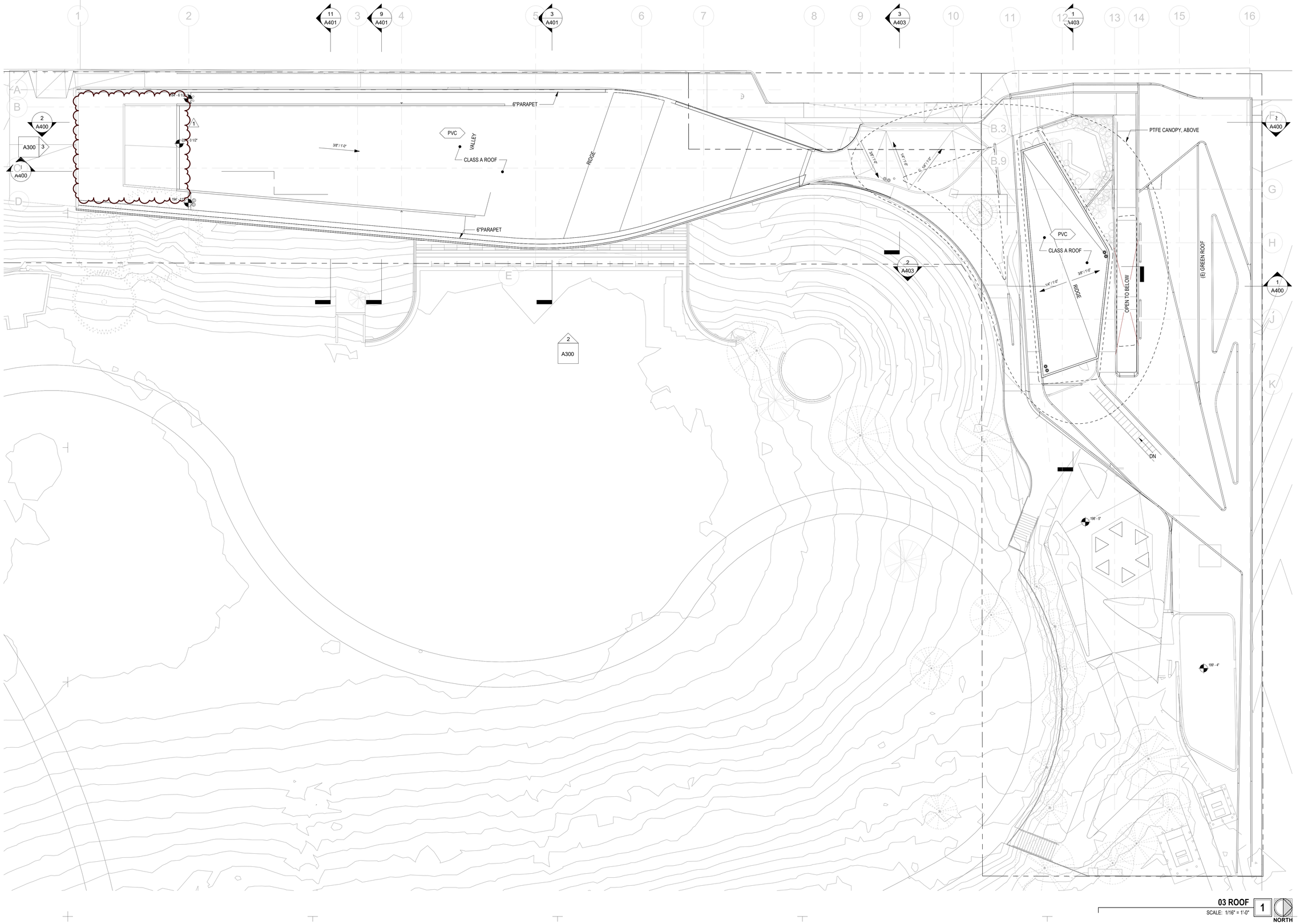

03 ROOF
SCALE: 1/16" = 1'-0"

1

NORTH

NOT FOR CONSTRUCTION

17.NOV.2021
100% DESIGN SUBMITTAL

belzberg architects
2740 MAIN STREET
SANTA MONICA, CA 90405
310.453.9611

www.belzbergarchitects.com

#	DESCRIPTION	DATE
1	P.C. VERIF 1	12/10/2021

HOLOCAUST MUSEUM LA EXPANSION

100 THE GROVE DRIVE
LOS ANGELES, CA 90036

ROOF PLAN

PROJECT NUMBER: 17009

A219

11/18/2021 11:32:54 AM

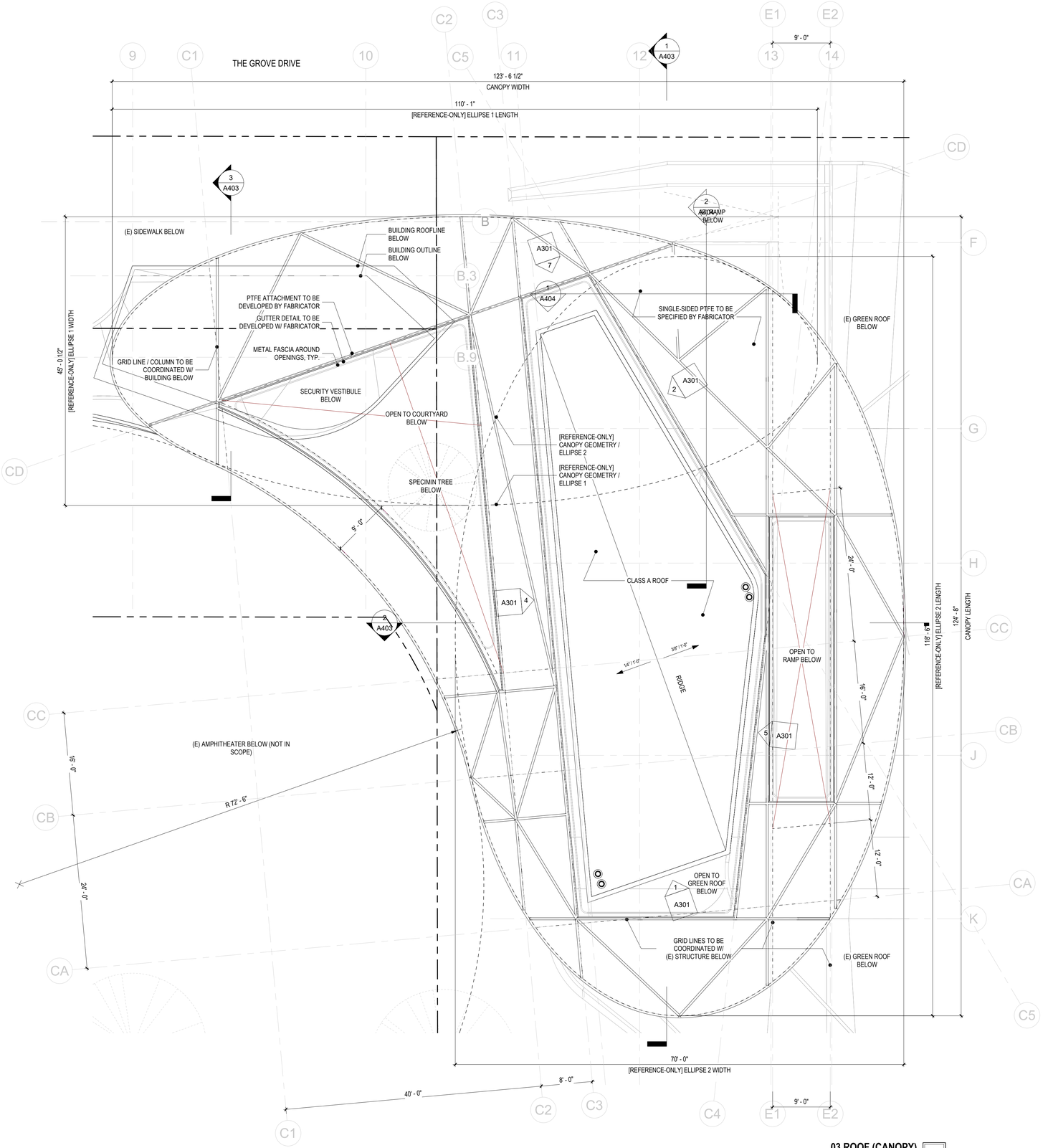

03 ROOF (CANOPY) 1

SCALE: 1/8" = 1'-0"

NOT FOR CONSTRUCTION

17.NOV.2021
100% DESIGN SUBMITTAL

belzberg architects
2740 MAIN STREET
SANTA MONICA, CA 90405
310.453.9611
www.belzbergarchitects.com

#	DESCRIPTION	DATE

HOLOCAUST MUSEUM LA EXPANSION

100 THE GROVE DRIVE
LOS ANGELES, CA 90036

CANOPY ROOF PLAN

PROJECT NUMBER: 17009

A220

11/18/2021 11:53:28 AM

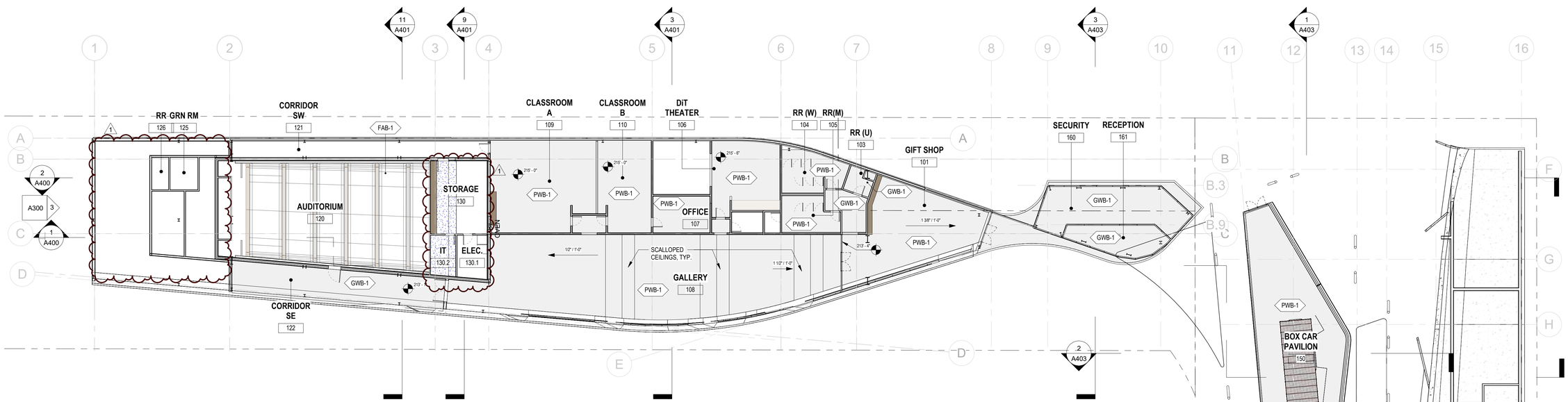

02 MEZZANINE 2
SCALE: 1/16" = 1'-0"

01 GALLERY 1
SCALE: 1/16" = 1'-0"

NORTH

NOT FOR CONSTRUCTION

17.NOV.2021
100% DESIGN SUBMITTAL

ba
belzberg architects
2740 MAIN STREET
SANTA MONICA, CA 90405
310.453.9611
www.belzbergarchitects.com

#	DESCRIPTION	DATE
1	P.C. VERIF 1	12/10/2021

HOLOCAUST MUSEUM LA EXPANSION

100 THE GROVE DRIVE
LOS ANGELES, CA 90036

GROUND FLOOR RCP KEY

PROJECT NUMBER: 17009

A231

11/19/2021 11:53:33 AM

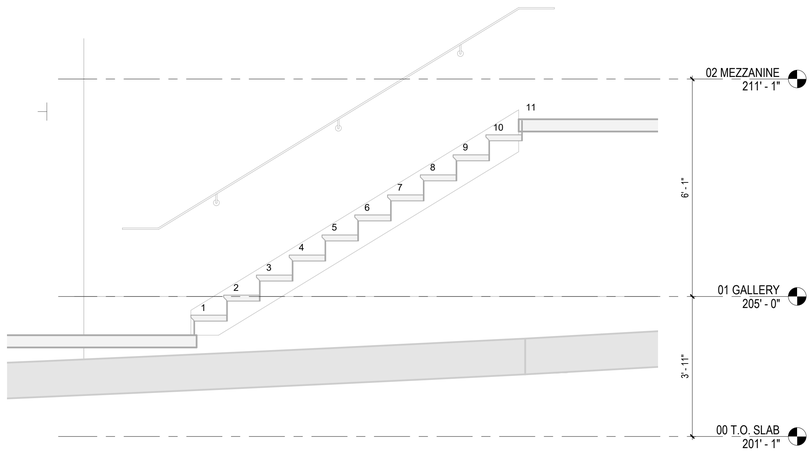

STAIR 3 SECTION 6
SCALE: 1/2" = 1'-0"

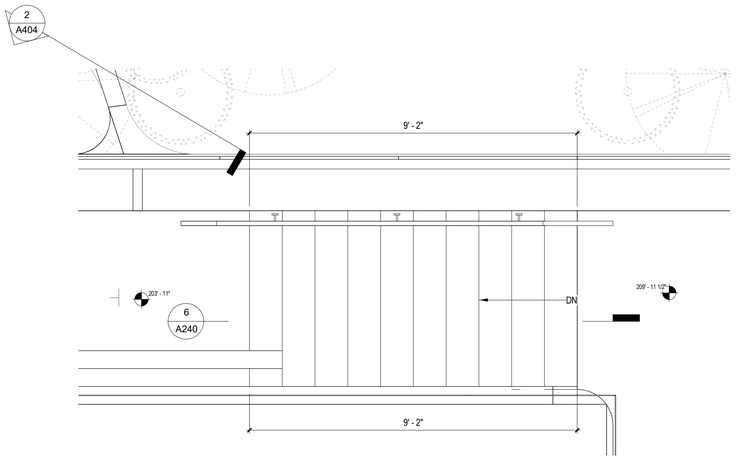

ENLARGED STAIR 3 PLAN 5
SCALE: 1/2" = 1'-0"

1

1

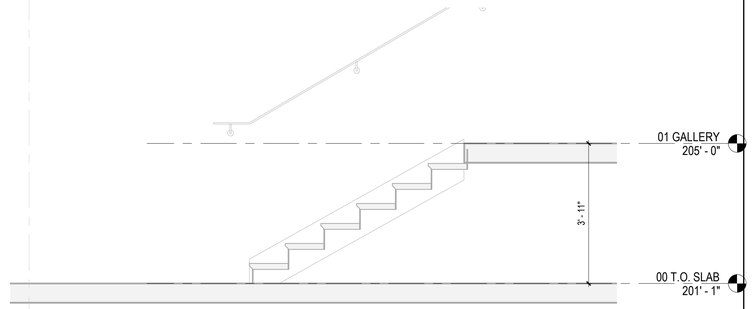

STAIR 1 SECTION 3
SCALE: 1/2" = 1'-0"

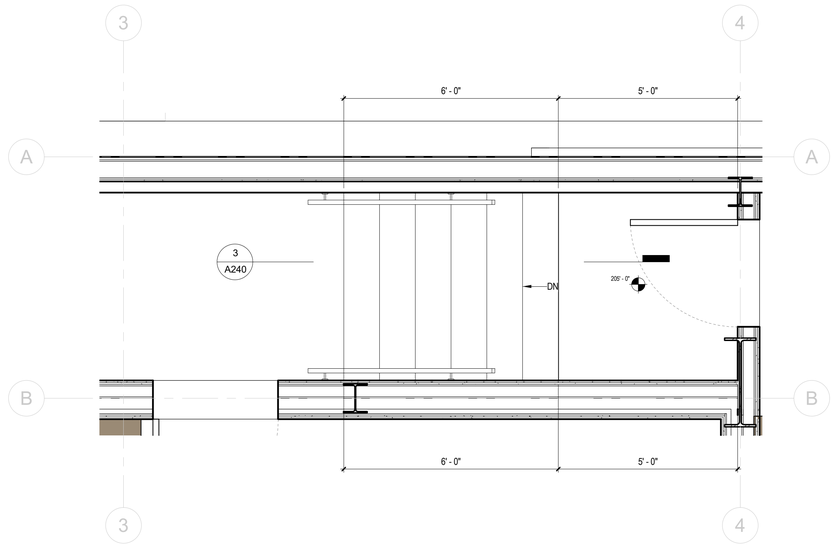

ENLARGED STAIR 1 PLAN 1
SCALE: 1/2" = 1'-0"

NOT FOR CONSTRUCTION

17.NOV.2021
100% DESIGN SUBMITTAL

ba
belzberg architects
2740 MAIN STREET
SANTA MONICA, CA 90405
310.453.9611
www.belzbergarchitects.com

#	DESCRIPTION	DATE
1	P.C. VERIF 1	12/10/2021

HOLOCAUST MUSEUM LA EXPANSION

100 THE GROVE DRIVE
LOS ANGELES, CA 90036

ENLARGED STAIR PLANS

PROJECT NUMBER: 17009

A240

11/18/2021 11:53:36 AM

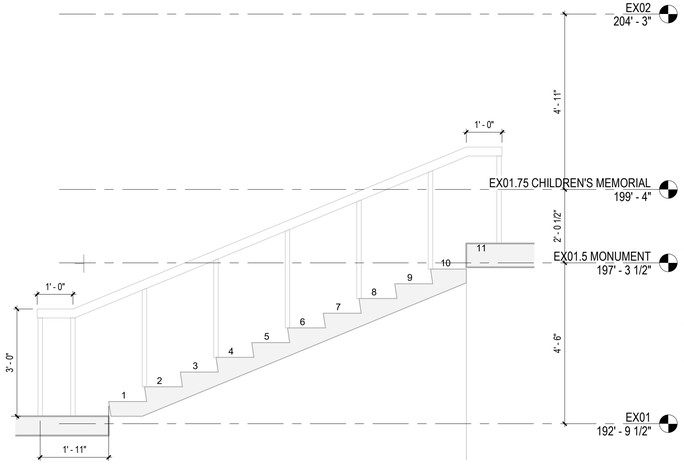

STAIR 5 SECTION 4
SCALE: 1/2" = 1'-0"

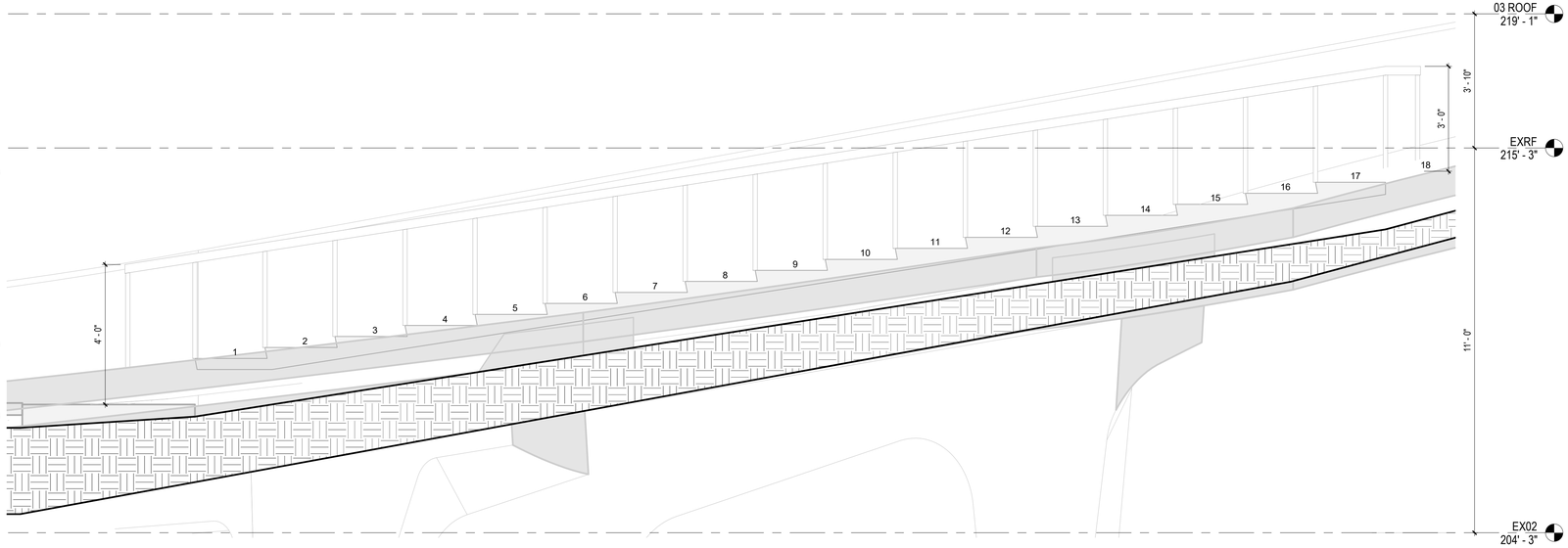

STAIR 4 SECTION 2
SCALE: 1/2" = 1'-0"

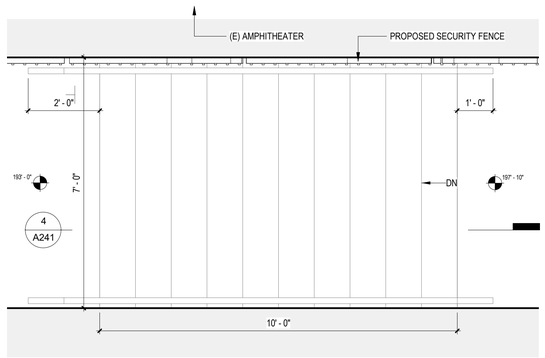

ENLARGED STAIR 5 PLAN 3
SCALE: 1/2" = 1'-0"

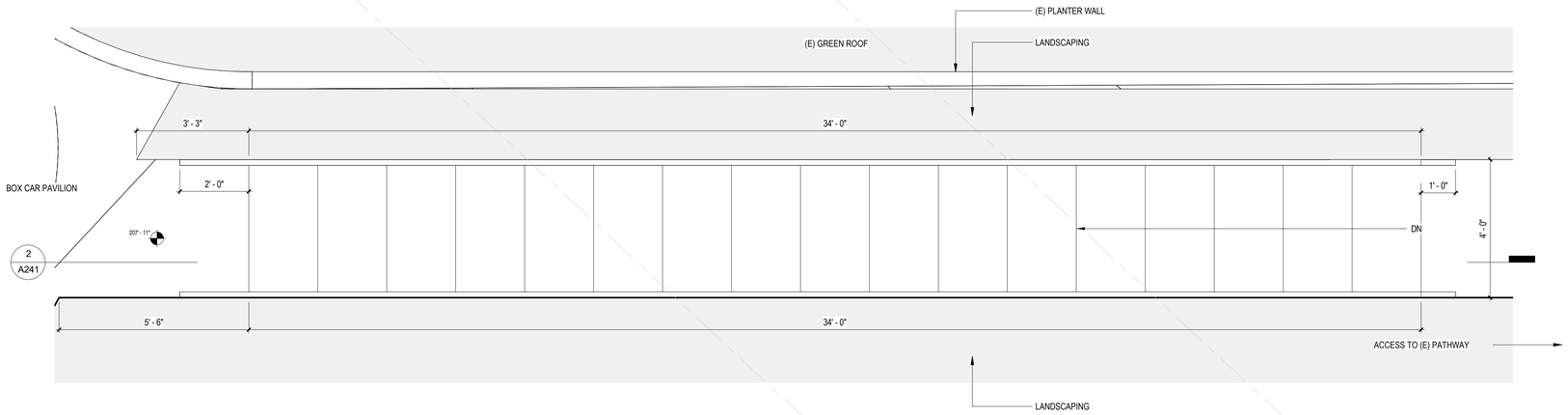

ENLARGED STAIR 4 PLAN 1
SCALE: 1/2" = 1'-0"

13 14 13 14

NOT FOR CONSTRUCTION

17.NOV.2021
100% DESIGN SUBMITTAL

ba
belzberg architects
2740 MAIN STREET
SANTA MONICA, CA 90405
310.453.9611
www.belzbergarchitects.com

#	DESCRIPTION	DATE

HOLOCAUST MUSEUM LA EXPANSION

100 THE GROVE DRIVE
LOS ANGELES, CA 90036

ENLARGED STAIR PLANS

PROJECT NUMBER: 17009

A241

11/18/2021 11:33:40 AM

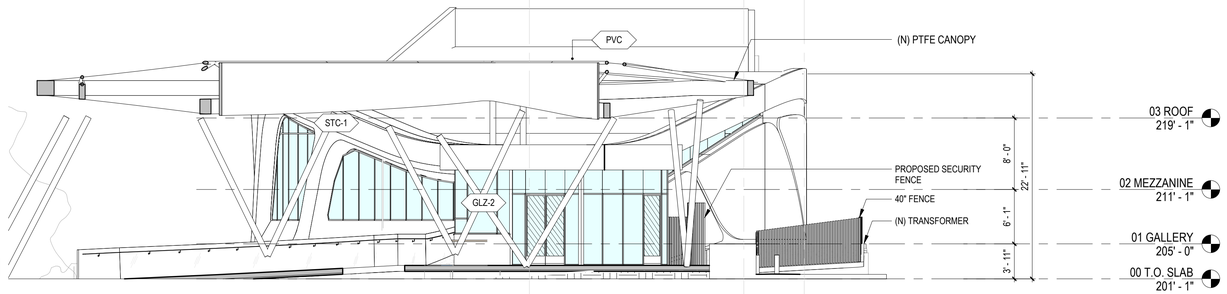

NORTH ELEVATION 4
SCALE: 1/8" = 1'-0"

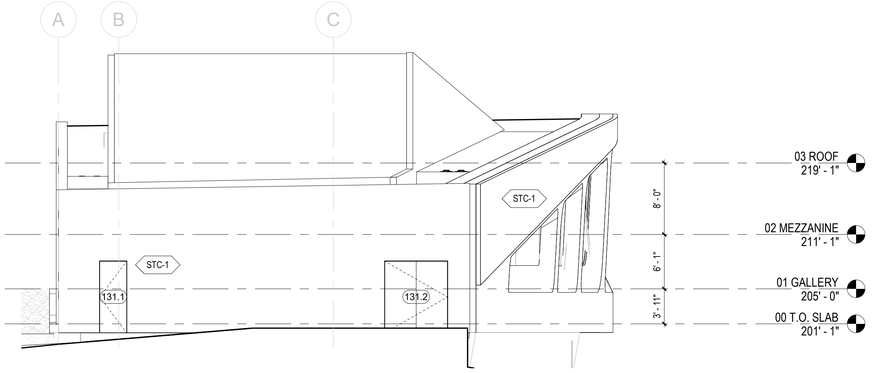

SOUTH ELEVATION 3
SCALE: 1/8" = 1'-0"

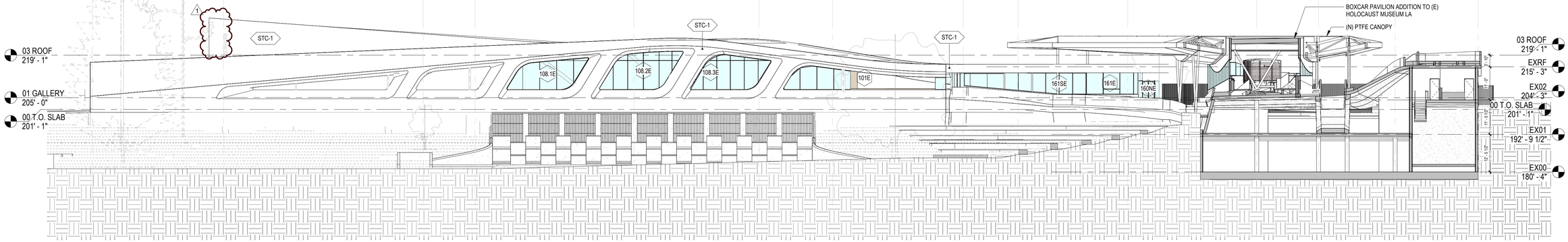

EAST ELEVATION 2
SCALE: 1/16" = 1'-0"

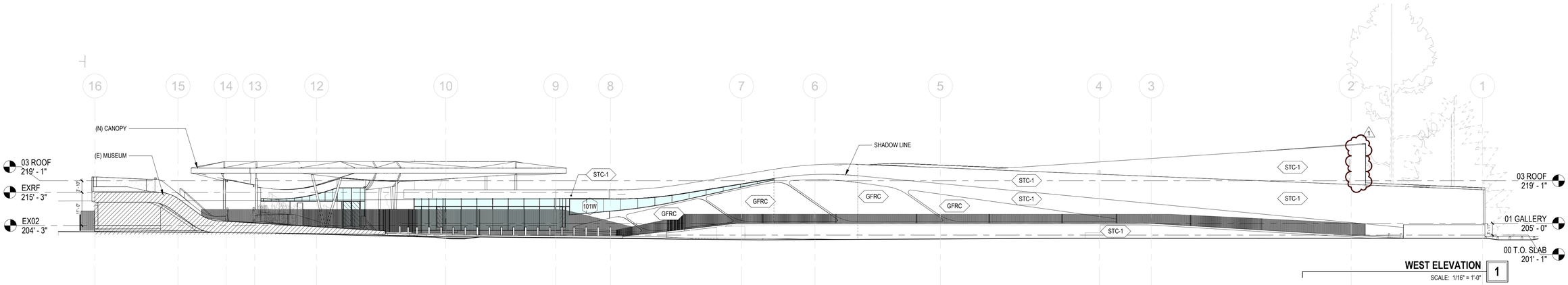

WEST ELEVATION 1
SCALE: 1/16" = 1'-0"

NOT FOR CONSTRUCTION

17.NOV.2021
100% DESIGN SUBMITTAL

ba
belzberg architects
2740 MAIN STREET
SANTA MONICA, CA 90405
310.453.9611
www.belzbergarchitects.com

#	DESCRIPTION	DATE
1	P.C. VERIF 1	12/10/2021

HOLOCAUST MUSEUM LA EXPANSION

100 THE GROVE DRIVE
LOS ANGELES, CA 90036

EXTERIOR ELEVATIONS - LEARNING CENTER

PROJECT NUMBER: 17009

A300

11/18/2021 11:53:54 AM

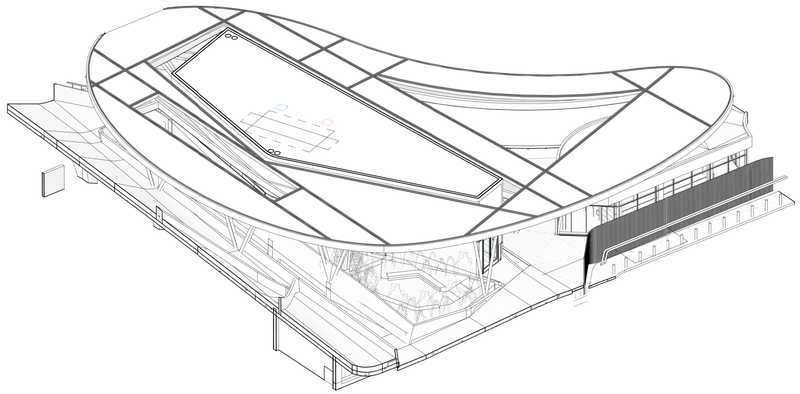

BOXCAR 3D NW
SCALE: 6

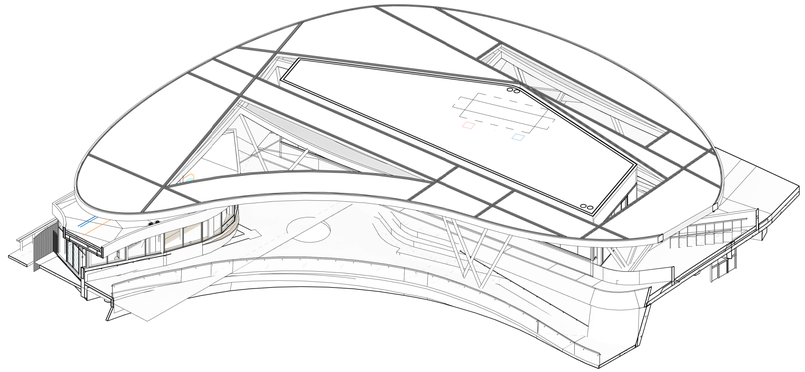

BOXCAR 3D SE
SCALE: 3

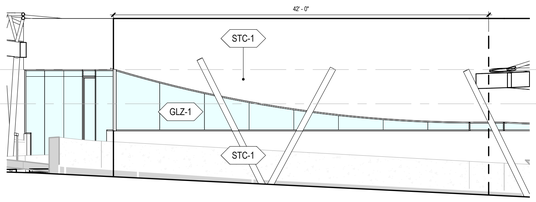

BOXCAR - NE
SCALE: 1/8" = 1'-0" 5

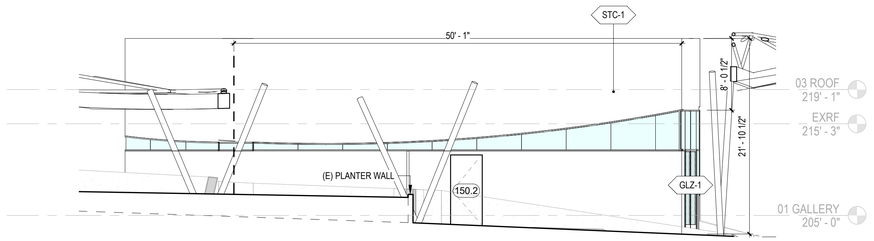

BOXCAR - NW
SCALE: 1/8" = 1'-0" 2

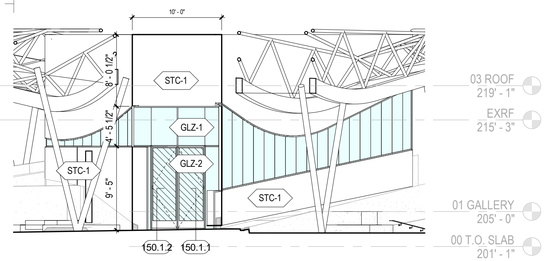

BOXCAR - W
SCALE: 1/8" = 1'-0" 7

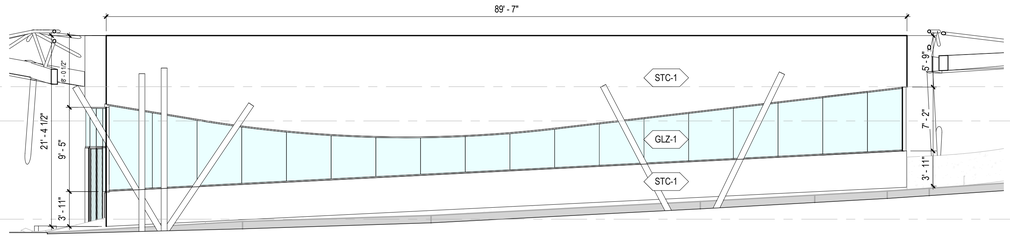

BOXCAR - S
SCALE: 1/8" = 1'-0" 4

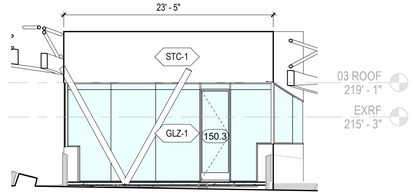

BOXCAR - E
SCALE: 1/8" = 1'-0" 1

NOT FOR CONSTRUCTION

17.NOV.2021
100% DESIGN SUBMITTAL

ba
belzberg architects
2740 MAIN STREET
SANTA MONICA, CA 90405
310.453.9611
www.belzbergarchitects.com

#	DESCRIPTION	DATE

HOLOCAUST MUSEUM LA EXPANSION

100 THE GROVE DRIVE
LOS ANGELES, CA 90036

EXTERIOR ELEVATIONS - BOXCAR PAVILION

PROJECT NUMBER: 17009

A301

11/18/2021 11:54:11 AM

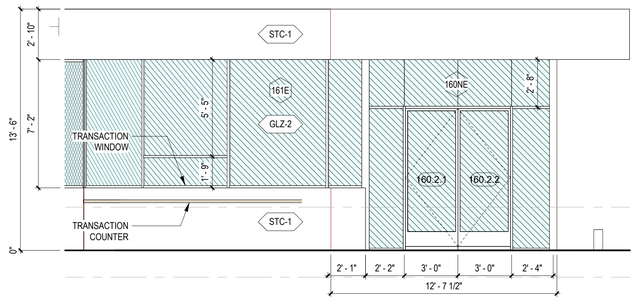

ENTRY PAVILION / ELEVATION 3 3
SCALE: 1/4" = 1'-0"

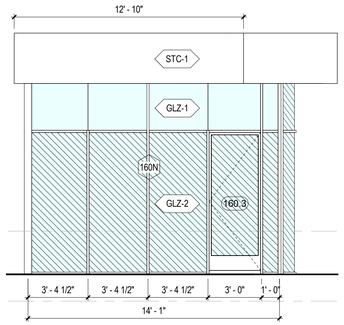

ENTRY PAVILION / ELEVATION 2 2
SCALE: 1/4" = 1'-0"

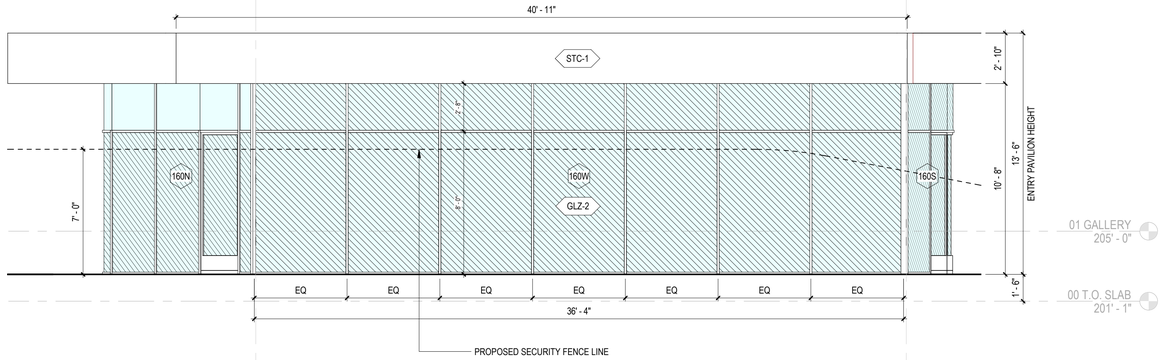

ENTRY PAVILION / ELEVATION 1 1
SCALE: 1/4" = 1'-0"

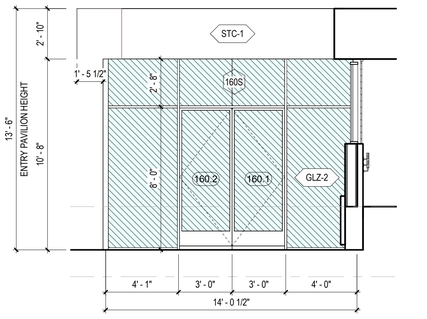

ENTRY PAVILION / ELEVATION 5 5
SCALE: 1/4" = 1'-0"

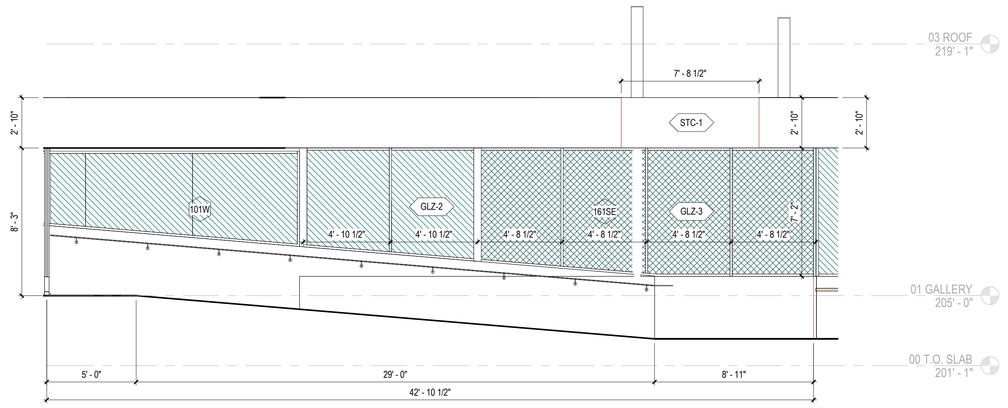

ENTRY PAVILION / ELEVATION 4 4
SCALE: 1/4" = 1'-0"

NOT FOR CONSTRUCTION

17.NOV.2021
100% DESIGN SUBMITTAL

belzberg architects
2740 MAIN STREET
SANTA MONICA, CA 90405
310.453.9611
www.belzbergarchitects.com

#	DESCRIPTION	DATE

HOLOCAUST
MUSEUM LA
EXPANSION

100 THE GROVE DRIVE
LOS ANGELES, CA 90036

EXTERIOR
ELEVATIONS -
ENTRY PAVILION

PROJECT NUMBER: 17009

A302

11/18/2021 11:54:14 AM

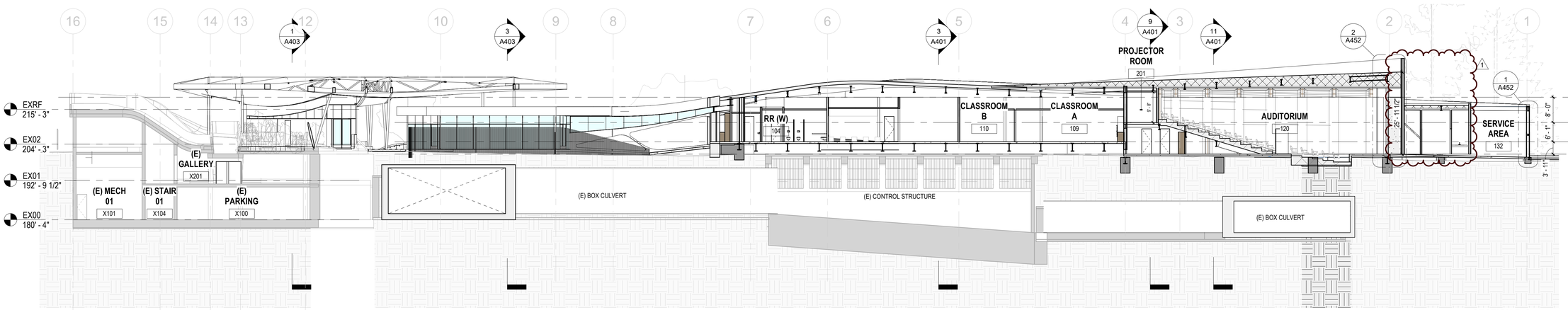

SECTION B-C 2
SCALE: 1/16" = 1'-0"

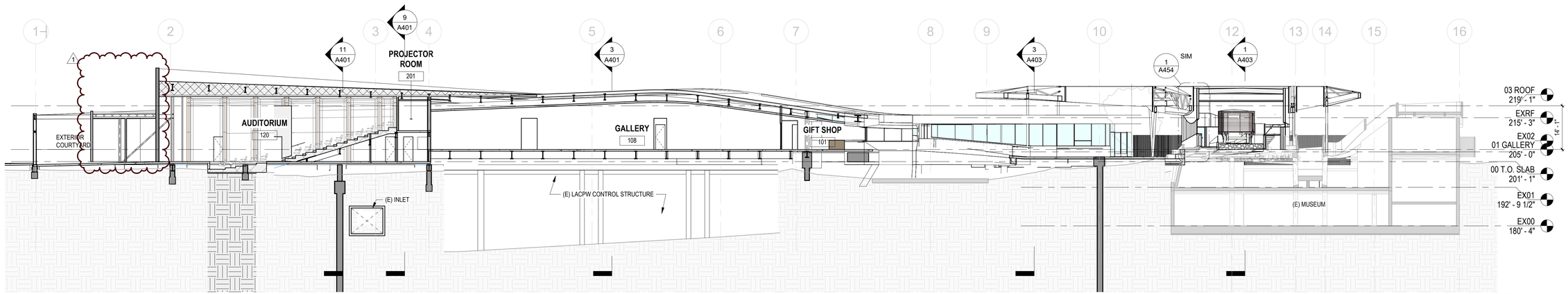

SECTION D-C 1
SCALE: 1/16" = 1'-0"

NOT FOR CONSTRUCTION

17.NOV.2021
100% DESIGN SUBMITTAL

belzberg architects
2740 MAIN STREET
SANTA MONICA, CA 90405
310.453.9611
www.belzbergarchitects.com

#	DESCRIPTION	DATE
1	P.C. VERIF 1	12/10/2021

HOLOCAUST MUSEUM LA EXPANSION

100 THE GROVE DRIVE
LOS ANGELES, CA 90036

BUILDING SECTIONS

PROJECT NUMBER: 17009

A400

11/18/2021 11:54:24 AM

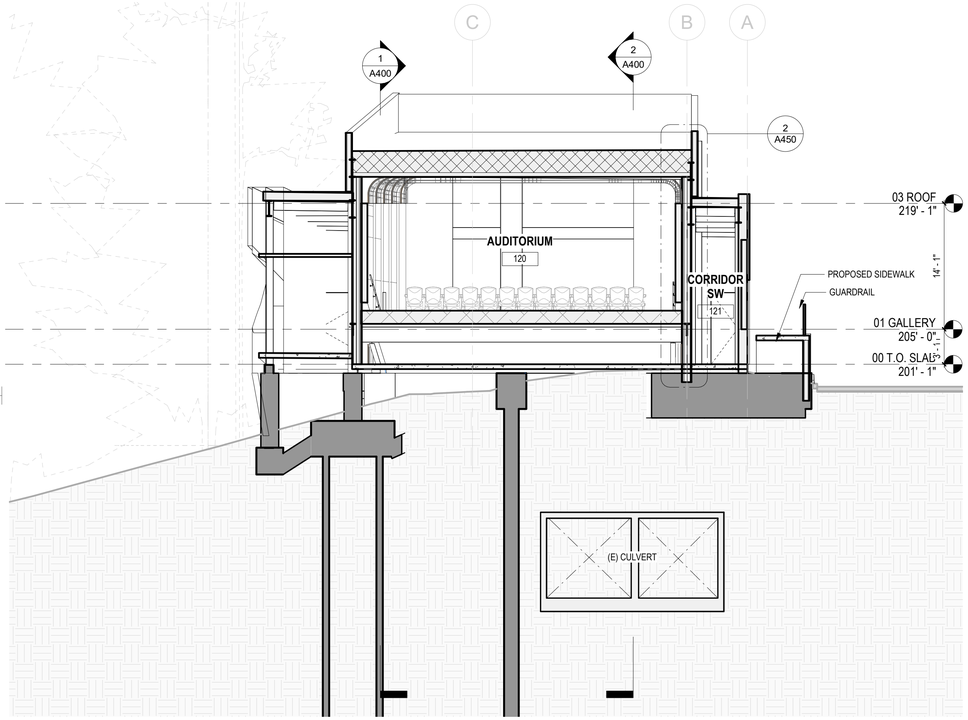

SECTION 3-2 AUDITORIUM 11

SCALE: 1/8" = 1'-0"

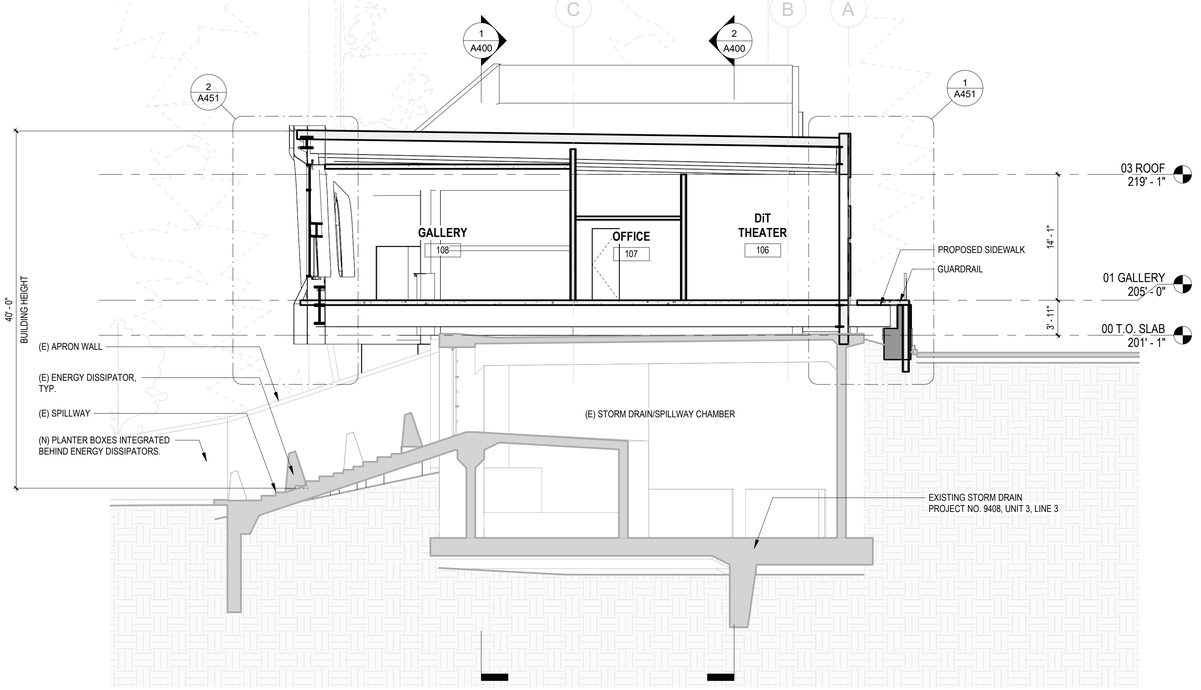

SECTION 6-5 GALLERY 3

SCALE: 1/8" = 1'-0"

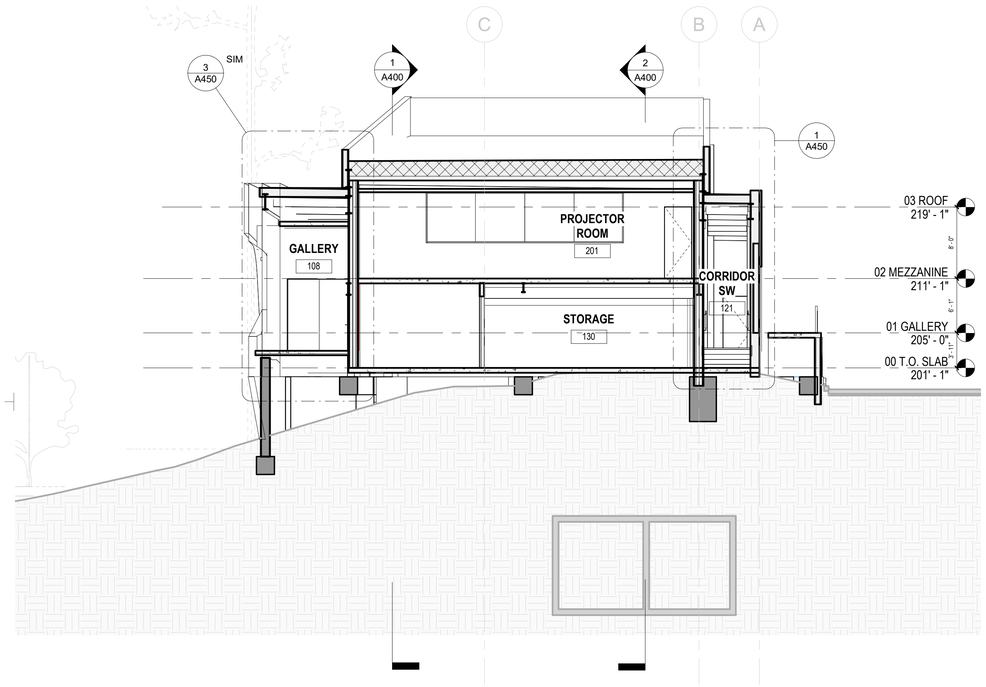

SECTION 4-3 PROJECTION ROOM 9

SCALE: 1/8" = 1'-0"

NOT FOR CONSTRUCTION

17.NOV.2021
100% DESIGN SUBMITTAL

ba
belzberg architects
2740 MAIN STREET
SANTA MONICA, CA 90405
310.453.9611

www.belzbergarchitects.com

#	DESCRIPTION	DATE

HOLOCAUST
MUSEUM LA
EXPANSION

100 THE GROVE DRIVE
LOS ANGELES, CA 90036

BUILDING SECTIONS

PROJECT NUMBER: 17009

A401

11/18/2021 11:54:28 AM

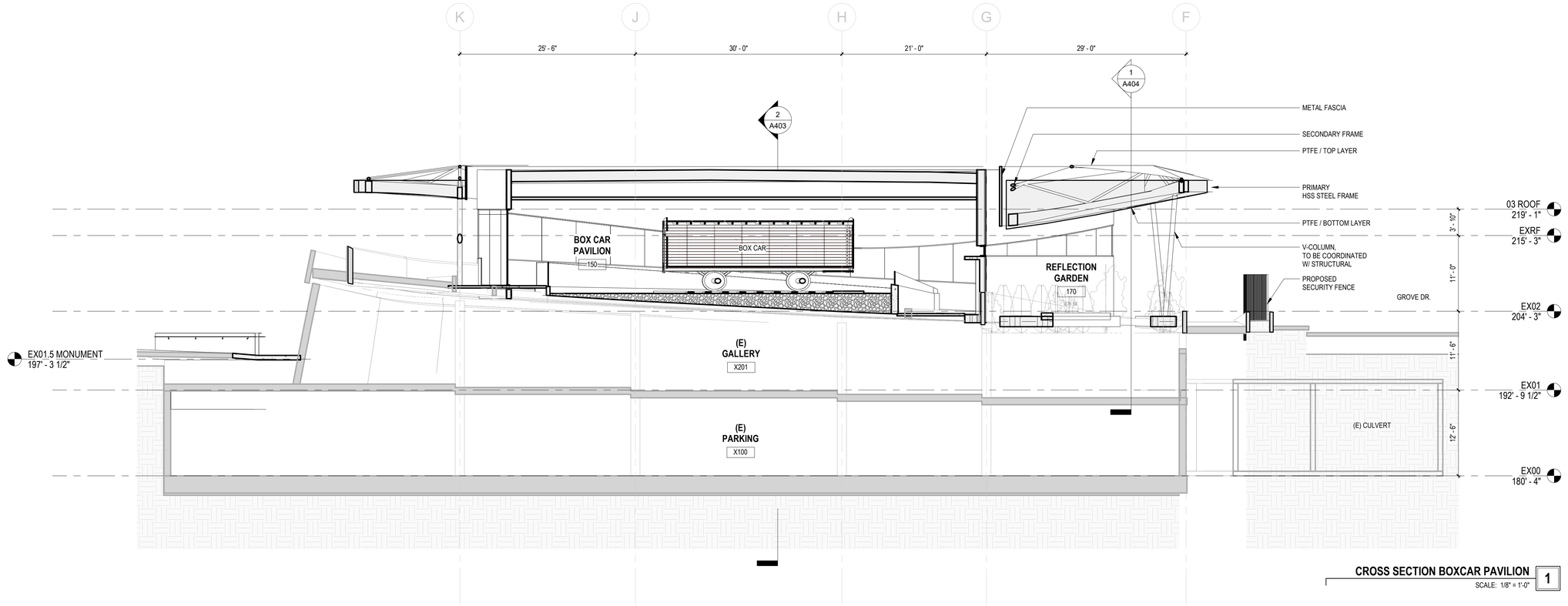

CROSS SECTION BOXCAR PAVILION 1

SCALE: 1/8" = 1'-0"

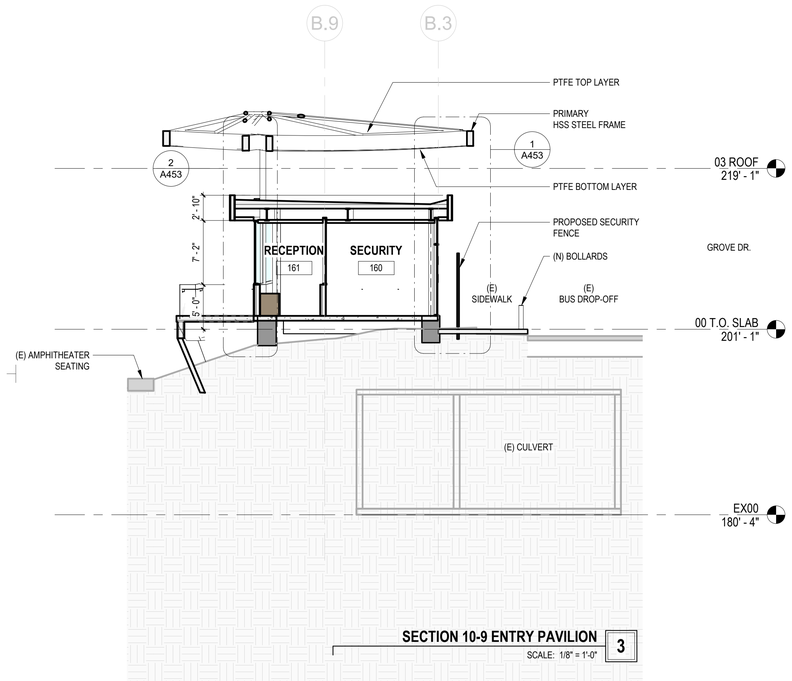

SECTION 10-9 ENTRY PAVILION 3

SCALE: 1/8" = 1'-0"

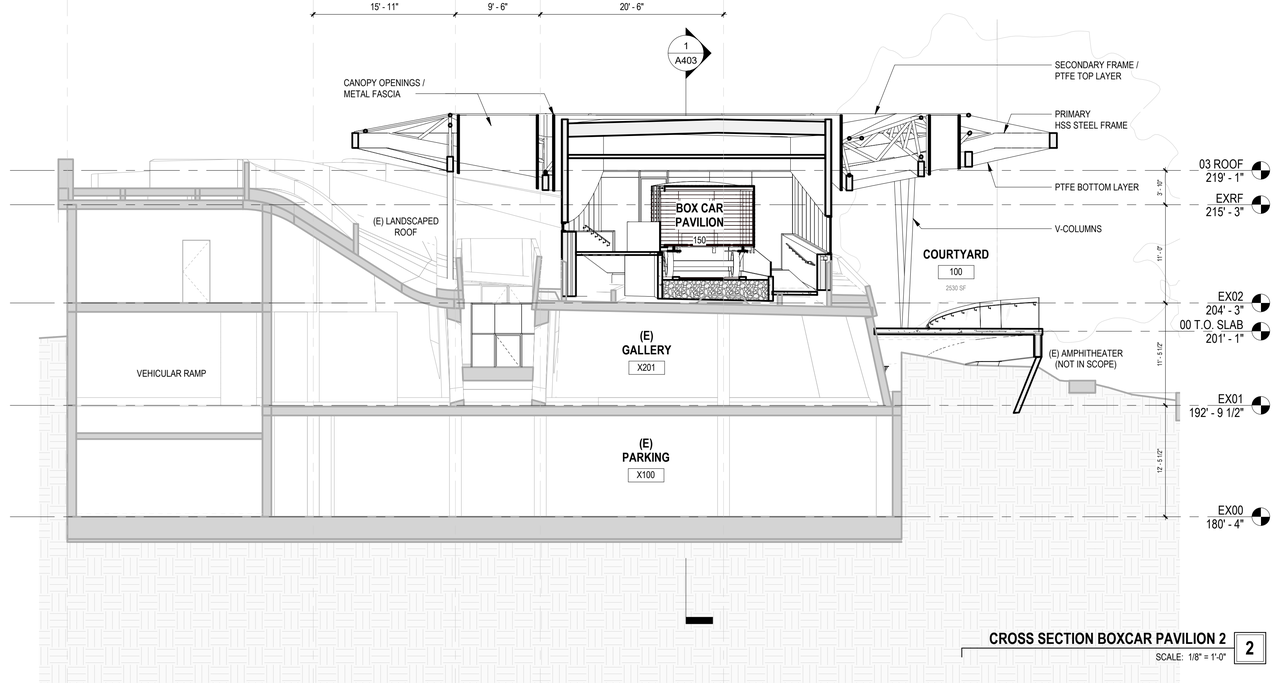

CROSS SECTION BOXCAR PAVILION 2 2

SCALE: 1/8" = 1'-0"

NOT FOR CONSTRUCTION

17.NOV.2021
100% DESIGN SUBMITTAL

ba
belzberg architects
2740 MAIN STREET
SANTA MONICA, CA 90405
310.453.9611
www.belzbergarchitects.com

#	DESCRIPTION	DATE

HOLOCAUST
MUSEUM LA
EXPANSION

100 THE GROVE DRIVE
LOS ANGELES, CA 90036

BUILDING SECTIONS
- CANOPY

PROJECT NUMBER: 17009

A403

11/18/2021 11:54:46 AM

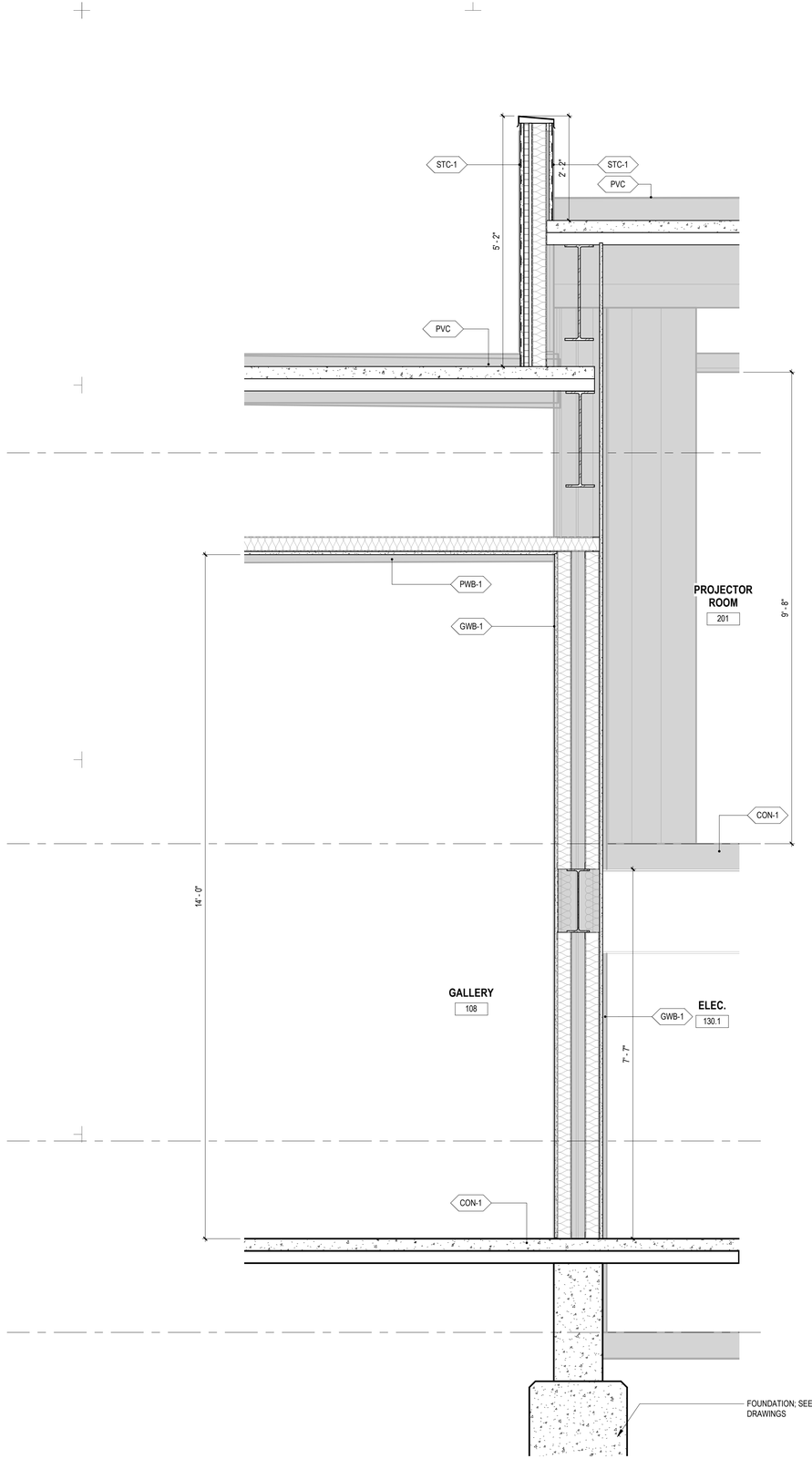

WALL SECTION 4-3 (PROJ. ROOM-E) 3
SCALE: 3/4" = 1'-0"

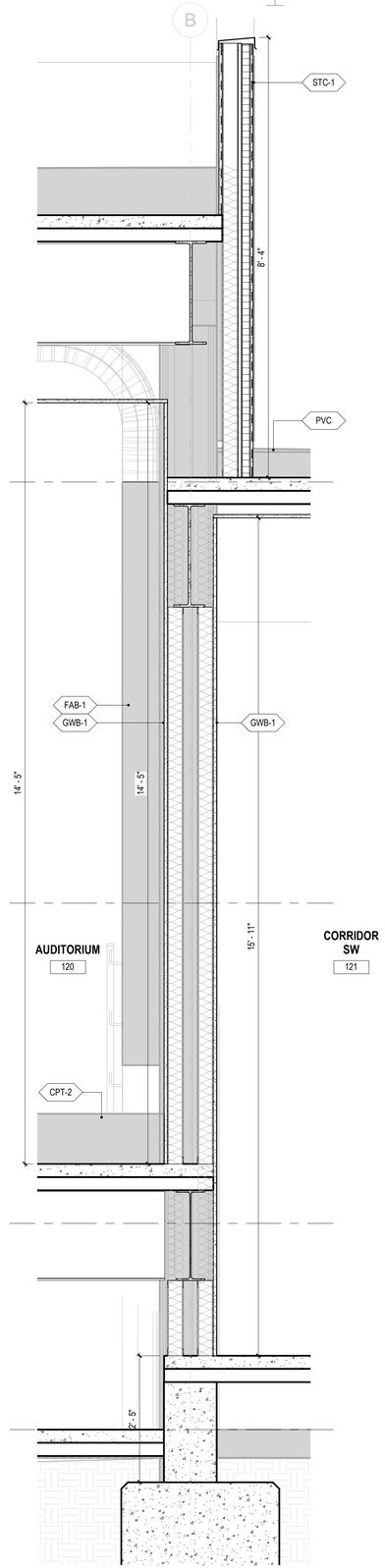

WALL SECTION 3-2 (AUDITORIUM-W) 2
SCALE: 3/4" = 1'-0"

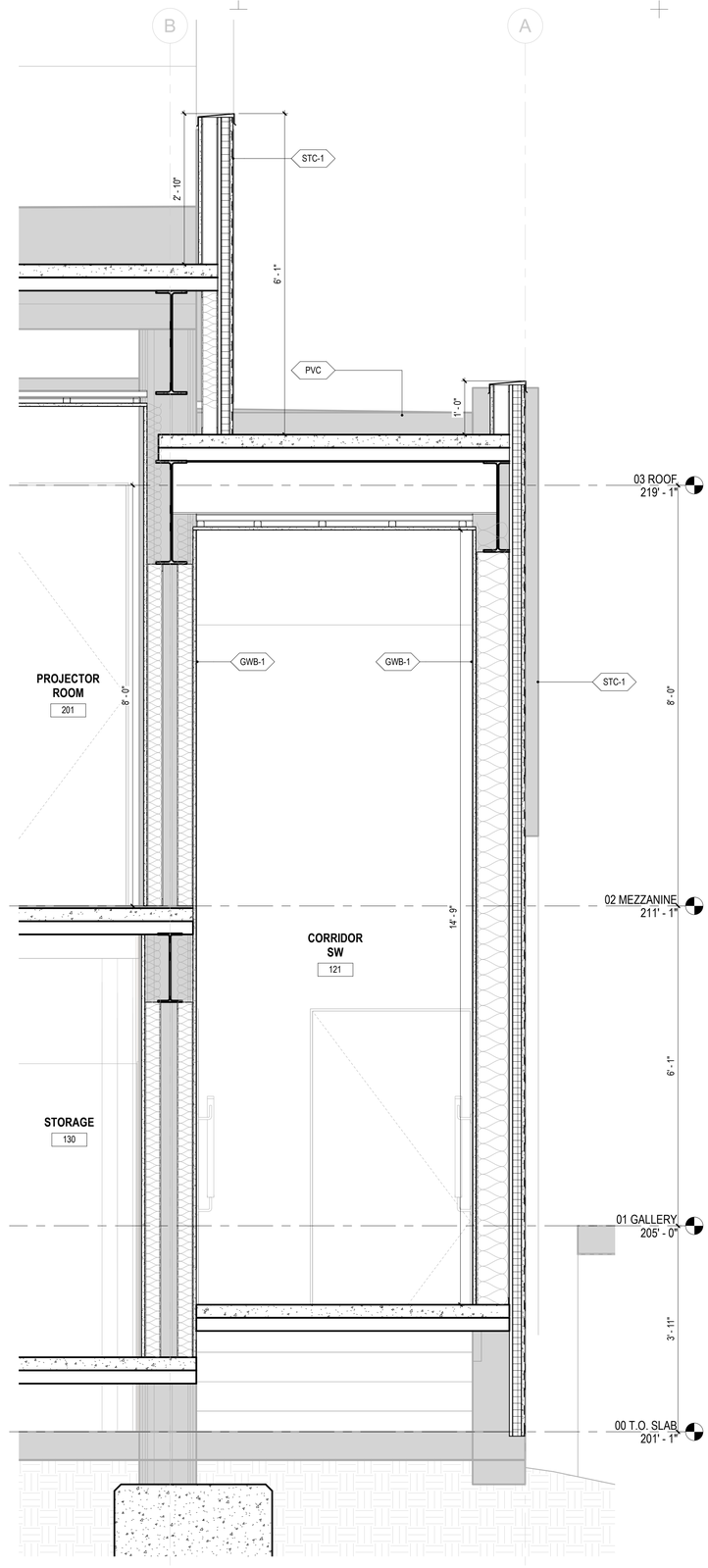

WALL SECTION 4-3 (PROJ. ROOM-W) 1
SCALE: 3/4" = 1'-0"

NOT FOR CONSTRUCTION

17.NOV.2021
100% DESIGN SUBMITTAL

ba
belzberg architects
2740 MAIN STREET
SANTA MONICA, CA 90405
310.453.9611
www.belzbergarchitects.com

#	DESCRIPTION	DATE

HOLOCAUST
MUSEUM LA
EXPANSION

100 THE GROVE DRIVE
LOS ANGELES, CA 90036

WALL SECTIONS

PROJECT NUMBER: 17009

A450

11/18/2021 11:54:48 AM

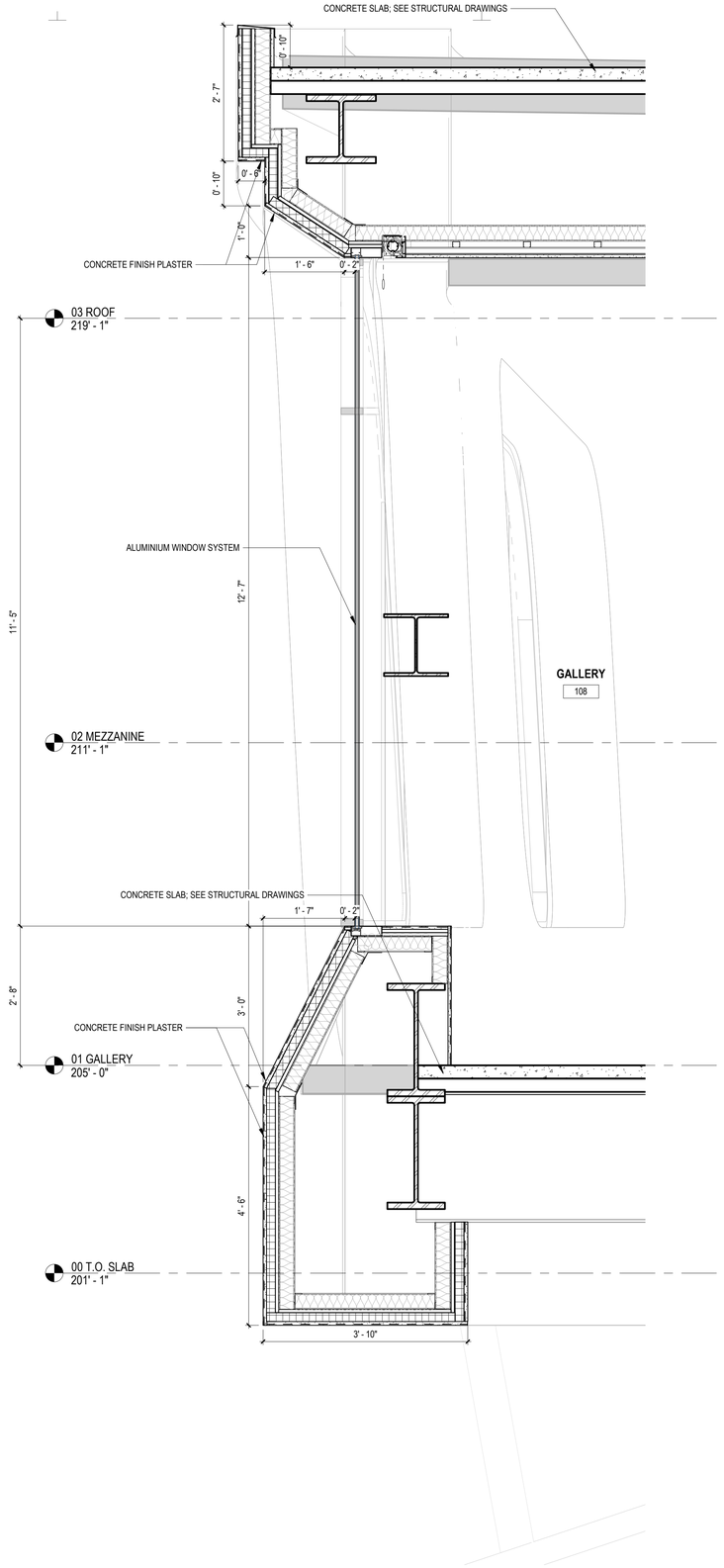

WALL SECTION 6-5 (GALLERY-E) 2

SCALE: 3/4" = 1'-0"

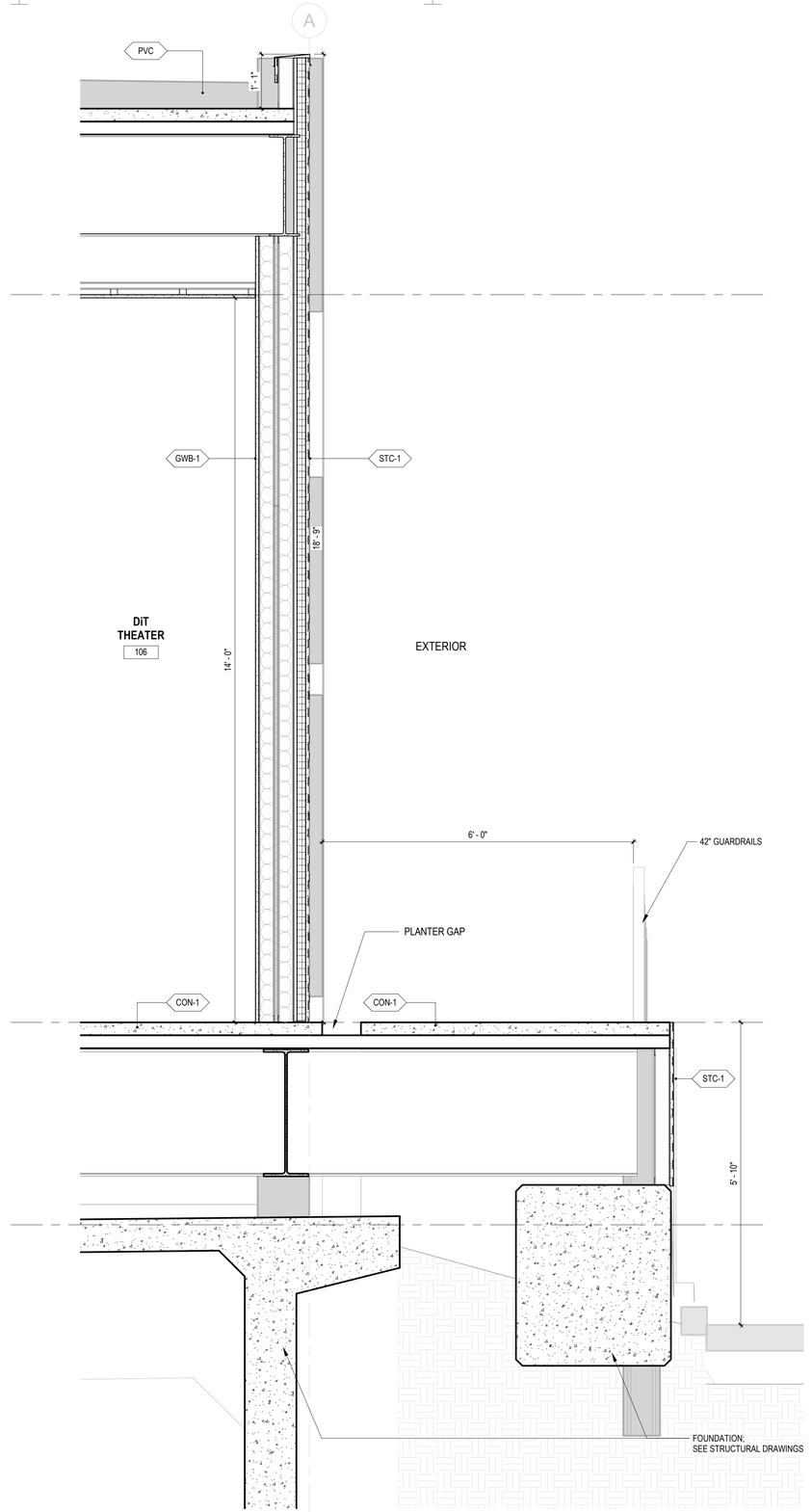

WALL SECTION 6-5 (DIT-W) 1

SCALE: 3/4" = 1'-0"

NOT FOR CONSTRUCTION

17.NOV.2021
100% DESIGN SUBMITTAL

ba
belzberg architects
2740 MAIN STREET
SANTA MONICA, CA 90405
310.453.9611
www.belzbergarchitects.com

#	DESCRIPTION	DATE

HOLOCAUST
MUSEUM LA
EXPANSION

100 THE GROVE DRIVE
LOS ANGELES, CA 90036

WALL SECTIONS

PROJECT NUMBER: 17009

A451

11/18/2021 11:56:39 AM

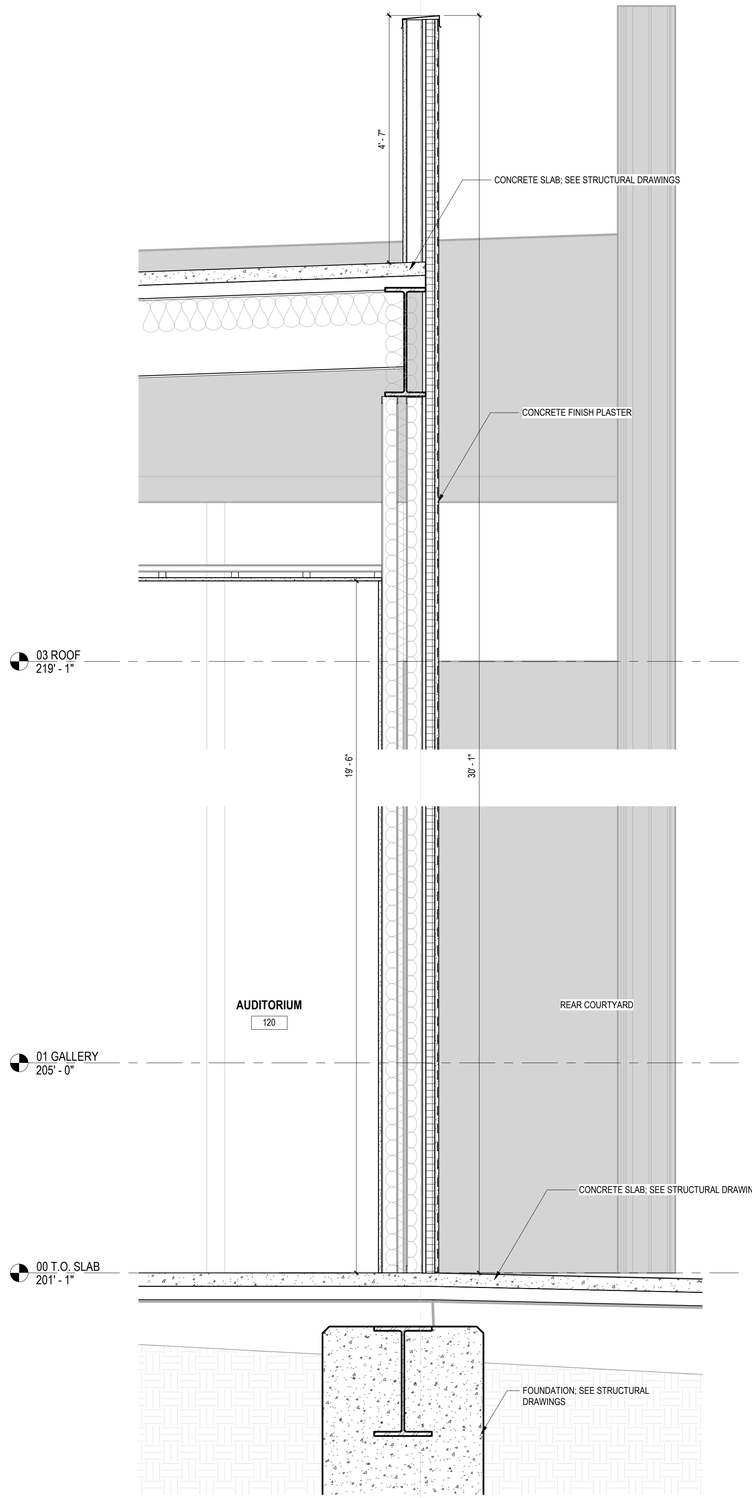

WALL SECTION B-C (AUDITORIUM-S) 2

SCALE: 3/4" = 1'-0"

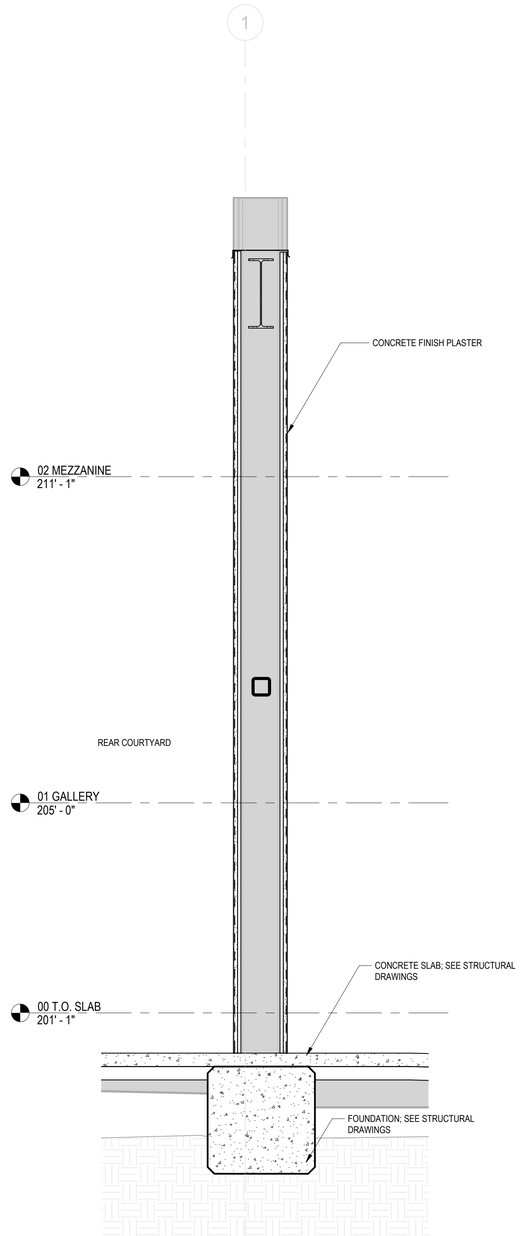

WALL SECTION B-C (MECH YARD-S) 1

SCALE: 3/4" = 1'-0"

NOT FOR CONSTRUCTION

17.NOV.2021
100% DESIGN SUBMITTAL

ba
belzberg architects
2740 MAIN STREET
SANTA MONICA, CA 90405
310.453.9611
www.belzbergarchitects.com

#	DESCRIPTION	DATE

HOLOCAUST MUSEUM LA EXPANSION

100 THE GROVE DRIVE
LOS ANGELES, CA 90036

WALL SECTIONS

PROJECT NUMBER: 17009

A452

11/18/2021 11:56:40 AM

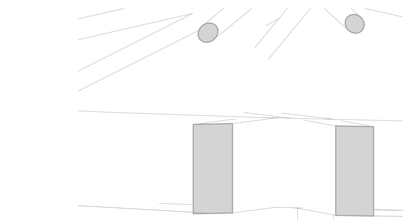

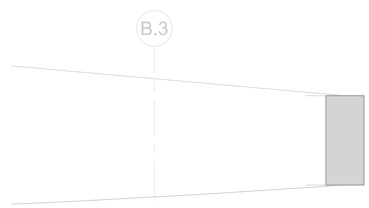

03 ROOF
219' - 1"

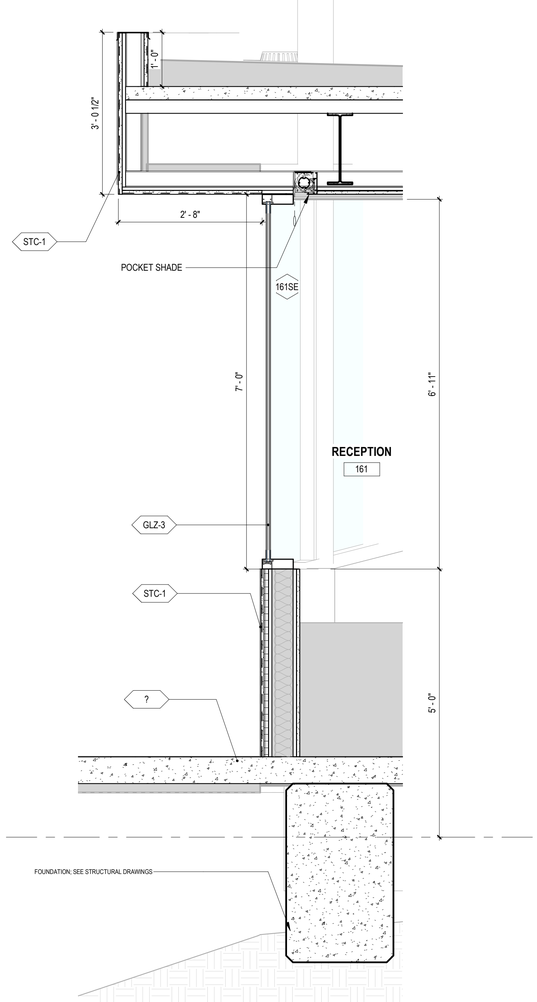

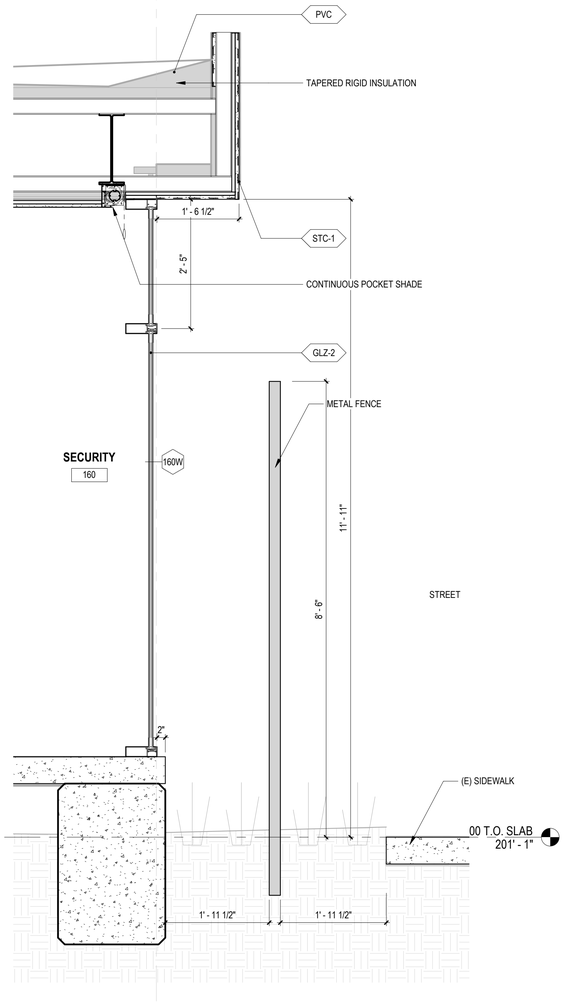

WALL SECTION 10-9 (ENTRY-E) 2
SCALE: 3/4" = 1'-0"

WALL SECTION 10-9 (ENTRY-W) 1
SCALE: 3/4" = 1'-0"

NOT FOR CONSTRUCTION

17.NOV.2021
100% DESIGN SUBMITTAL

ba
belzberg architects
2740 MAIN STREET
SANTA MONICA, CA 90405
310.453.9611
www.belzbergarchitects.com

#	DESCRIPTION	DATE

HOLOCAUST MUSEUM LA EXPANSION

100 THE GROVE DRIVE
LOS ANGELES, CA 90036

WALL SECTIONS - ENTRY PAVILION

PROJECT NUMBER: 17009

A453

11/19/2021 11:58:42 AM

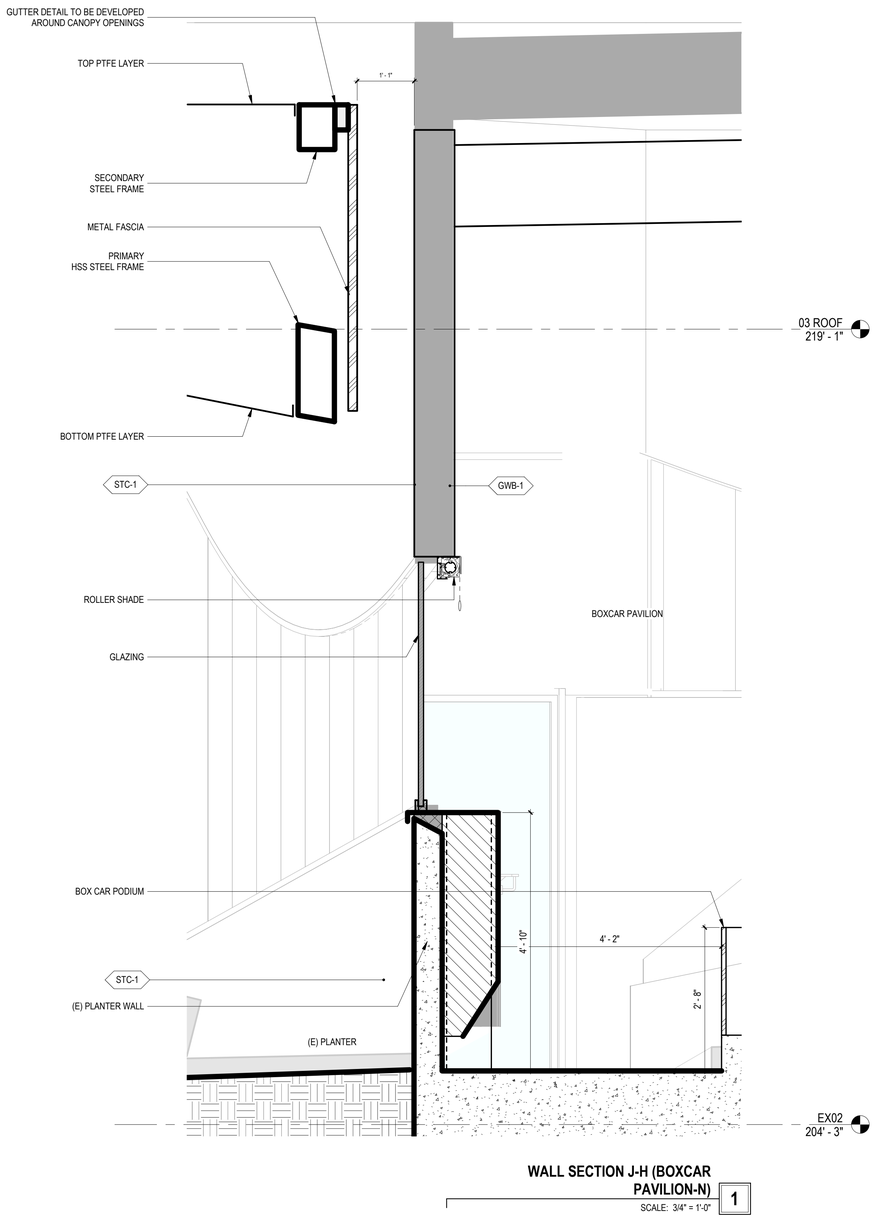

WALL SECTION J-H (BOXCAR PAVILION-N) 1

SCALE: 3/4" = 1'-0"

NOT FOR CONSTRUCTION

17.NOV.2021
100% DESIGN SUBMITTAL

ba
belzberg architects
2740 MAIN STREET
SANTA MONICA, CA 90405
310.453.9611
www.belzbergarchitects.com

#	DESCRIPTION	DATE

HOLOCAUST MUSEUM LA EXPANSION

100 THE GROVE DRIVE
LOS ANGELES, CA 90036

WALL SECTIONS - BOXCAR PAVILION

PROJECT NUMBER: 17009

A454

11/18/2021 11:56:43 AM

MATERIAL SCHEDULE

TYPE	DESCRIPTION	BASIS OF DESIGN PRODUCT		COMMENTS
		MANUFACTURER	MODEL	
ALU-1	ALUMINUM STOREFRONT	TBD		ANNODIZED FINISH, COLOR BY ARCHITECT
BRP	BALLISTIC RESISTANT PANELLING	RAY-BAR ENGINEERING CORP., OR APPROVED EQUAL	BALLISTIC RESISTANT PANELING - UL 752 LEVEL 8 / NIJ 111	ALT. ARMOR CORE LEVEL3 PANELS
CB	CEMENT BOARD SUBSTRATE FOR TILE	BY CONTRACTOR		
CMU-1	CONCRETE MASONRY UNITS	BY CONTRACTOR		
CON-1	CAST-IN-PLACE CONCRETE	BY CONTRACTOR		SMOOTH, POLISHED FINISH
CON-3	LIGHTWEIGHT CONCRETE TOPPING	BY CONTRACTOR		
CPT-1	LOW PILE CARPET TILE	FLOR OR APPROVED EQUAL		
CPT-2	CARPET, TBD			
FAB-1	FABRIC -WRAPPED FOAM PANEL			
GFRC	SMOOTH-TROWELED STUCCO	BY CONTRACTOR		COLOR/TEXTURE MATCH TO EXISTING MUSEUM CONCRETE
GLZ-1	TEMPERED, 1-1/4" INSULATED GLAZING UNIT W/ REFLECTIVE INTERLAYER			
GLZ-2	TEMPERED, LAMINATED, 5 MIN TAMPER GLAZING UNIT W/ REFLECTIVE INTERLAYER	ARCADIA, OR APPPROVED EQUAL	FDI05M	Ballistic-Thermal-T500BTX-OPG3005-ALL-Series
GLZ-3	TEMPERED, LAMINATED, 5 MIN TAMPER GLAZING UNIT W/ REFLECTIVE INTERLAYER	ARCADIA, OR APPPROVED EQUAL	FDI05M	Ballistic-Thermal-T500BTX-OPG3005-ALL-Series
GWB-1	GYPSUM WALL BOARD	BY CONTRACTOR		
MTL-1	BRAKE-FORMED GALV STEEL FLASHINGS & FASCIAS, PAINTED			SEE SECTION 057500 FOR DETAILS; PAINT TO MATCH STRUCTURAL STEEL FRAMING
P-104	CAST-IN-PLACE CONCRETE, EXPOSED AGGREGATE FINISH	BY CONTRACTOR		
PVC	CLASS-A KEE ROOFING MEMBRANE W/ COARSE GRAVEL	FIBERTITE	CR GRAY	PROVIDE ADD ALT FOR CUSTOM MADE-TO-ORDER COLOR. PROVIDE ADDITIONAL ADD ALT FOR GRAILCOAT AT ROOF
PWB-1	PLASTER WALL BOARD	STARSILENT	25MM SMOOTH	CEILING APPLICATIONS WHERE APPLICABLE.
STC-1	SMOOTH-TROWELED STUCCO	BY CONTRACTOR		COLOR/TEXTURE MATCH TO EXISTING MUSEUM CONCRETE
W-102	CAST-IN-PLACE CONCRETE	TRADEMARK OR EQUAL		
WD-1	WOOD FLOORING	TBD	7" WIDE PLANK ENGINEERED EUROPEAN WHITE OAK	

NOTES:

1. ALL QUANTITIES SHOWN ARE FOR REFERENCE ONLY. CONTRACTOR TO VERIFY ALL QUANTITIES AND MEASUREMENTS.

NOT FOR CONSTRUCTION

17.NOV.2021
100% DESIGN SUBMITTAL

ba
belzberg architects
2740 MAIN STREET
SANTA MONICA, CA 90405
310.453.9611
www.belzbergarchitects.com

#	DESCRIPTION	DATE
1	P.C. VERIF 1	12/10/2021

HOLOCAUST
MUSEUM LA
EXPANSION

100 THE GROVE DRIVE
LOS ANGELES, CA 90036

SCHEDULES

PROJECT NUMBER: 17009

A600

11/18/2021 11:26:44 AM

DOOR HARDWARE NOTES

1. ALL PIN-TYPE HINGES ACCESSIBLE FROM THE EXTERIOR SHALL HAVE NON REMOVABLE HINGE PINS. HINGES SHALL HAVE MIN. 1/4"Ø STEEL JAMB STUD WITH 1/4" MIN PROTECTION. STRIKE PLATE SHALL BE SECURED TO JAMBS WITH MIN 2.5" LENGTH SCREWS.

2. DEAD BOLTS SHALL HAVE HARDENED INSERTS, DEADLOCKING LATCH WITH KEY OPERATED LOCKS ON EXTERIOR. STRAIGHT DEAD BOLTS SHALL HAVE A MIN. THROW OF 1", EMBEDMENT OF NOT LESS THAN 5/8". HOOKSHAPED OR EXPANDING LUG DEADBLOTS SHALL HAVE A MIN THROW OF 3/4". DOOR KNOBS AND DEADBOLT THUMB TURNS SHALL NOT BE SEPARATED BY MORE THAN 8 INCHES.

3. SLIDING DOORS SHALL BE PROVIDED WITH A DEVICE IN THE UPPER CHANNEL TO PROHIBIT RAISING AND REMOVING OF THE PANEL IN THE CLOSED OR PARTIALLY OPEN POSITION. SLIDING GLASS DOORS SHALL BE EQUIPPED WITH LOCKING DEVICES TO REMAIN INTACT WHEN TESTED PER SEC 6717.1.

GLAZING NOTES

1. GLAZING IN THE FOLLOWING LOCATIONS SHALL BE SAFETY GLAZING CONFORMING TO THE HUMAN IMPACT LOADS OF SECTION R308.3:
A) FIXED AND OPERABLE PANELS OF SWINGING, SLIDING AND BIFOLD DOOR ASSEMBLIES.
B) GLAZING IN AN INDIVIDUAL FIXED OR OPERABLE PANEL ADJACENT TO A DOOR WHERE THE NEAREST VERTICAL EDGE IS WITHIN A 24" ARC OF THE DOOR IN A CLOSED POSITION AND WHOSE BOTTOM EDGE IS LESS THEN 60" ABOVE THE FLOOR OR WALKING SURFACE.
C) GLAZING IN AN INDIVIDUAL FIXED OR OPERTABLE PANEL THAT MEETS ALL OF THE FOLLOWING CONDITIONS:
   1. EXPOSED AREAS OF AN INDIVIDUAL PANE GREATER THAN 9 SQUARE FEET.
   2. BOTTOM EDGE LESS THAN 18" ABOVE THE FLOOR
   3. TOP EDGE GREATER THAN 36" ABOVE THE FLOOR
   4. ONE OR MORE WALKING SURFACES WITHIN 36" HORIZONTALLY OF THE GLAZING
D) GLAZING IN RAILINGS
E) GLAZING IN ENCLOSURES FOR OR WALLS FACING HOT TUBS, WHIRLPOOLS, SAUNAS, SETAM ROOMS, BATHRUBS AND SHOWERS WHERE THE BOTTOM EDGE OF THE GLAZING IS LESS THAN 60" MEASURED VERTICALLY ABOVE ANY STANDING OR WALKING SURFACE.

2. CONTRACTOR TO VERIFY IN FIELD ALL WINDOW & WINDOW WALL OPENINGS PRIOR TO FABRICATION

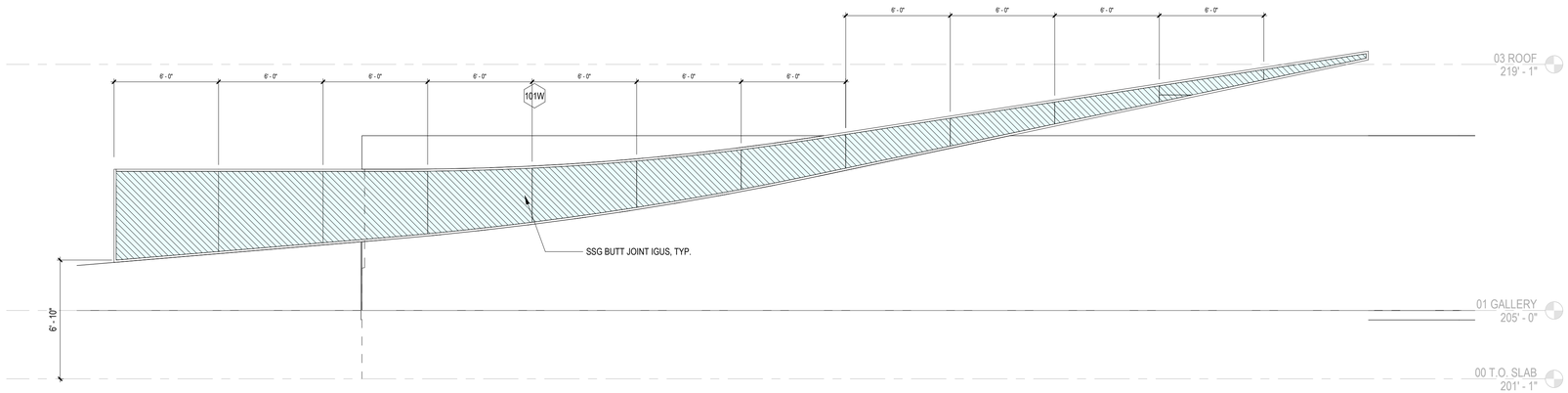

WWE - 101W GIFTSHOP 6
SCALE: 1/4" = 1'-0"

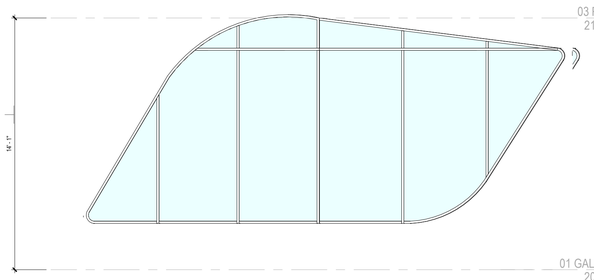

WWE - 108.4 GALLERY 5
SCALE: 1/4" = 1'-0"

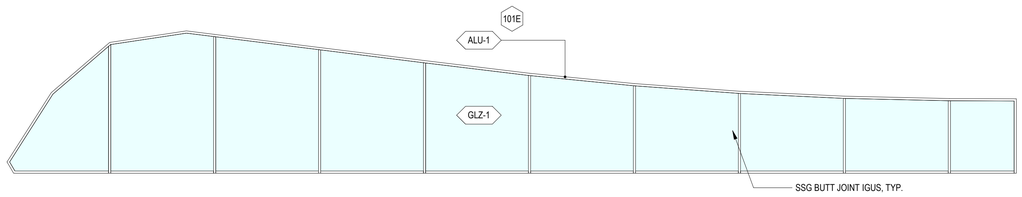

WWE - 101E GIFTSHOP 4
SCALE: 1/4" = 1'-0"

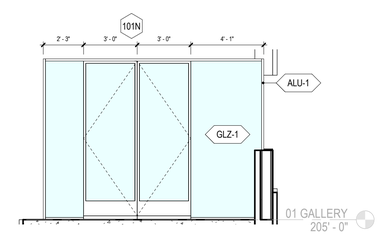

WWE - 101N GIFTSHOP 534
SCALE: 1/4" = 1'-0"

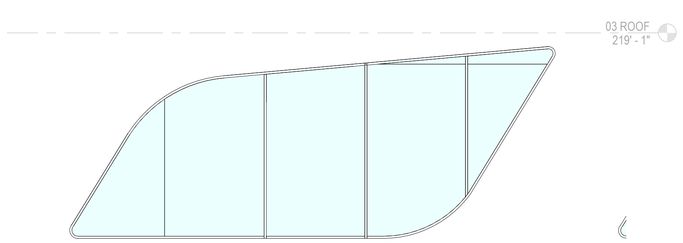

WWE - 108.2 GALLERY 2
SCALE: 1/4" = 1'-0"

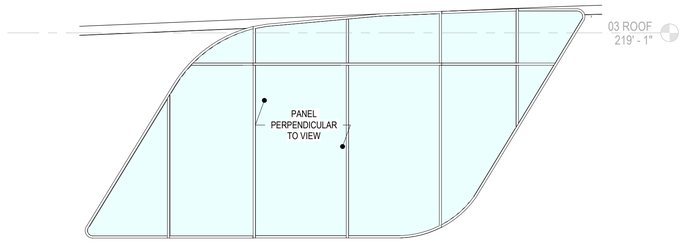

WWE - 108.3 GALLERY 1
SCALE: 1/4" = 1'-0"

NOT FOR CONSTRUCTION

17.NOV.2021
100% DESIGN SUBMITTAL

belzberg architects
2740 MAIN STREET
SANTA MONICA, CA 90405
310.453.9611
www.belzbergarchitects.com

#	DESCRIPTION	DATE

HOLOCAUST MUSEUM LA EXPANSION

100 THE GROVE DRIVE
LOS ANGELES, CA 90036

WINDOW WALL ELEVATIONS

PROJECT NUMBER: 17009

A610

11/18/2021 11:56:45 AM

DOOR HARDWARE NOTES

1. ALL PIN-TYPE HINGES ACCESSIBLE FROM THE EXTERIOR SHALL HAVE NON REMOVABLE HINGE PINS. HINGES SHALL HAVE MIN. 1/4"Ø STEEL JAMB STUD WITH 1/4" MIN PROTECTION. STRIKE PLATE SHALL BE SECURED TO JAMBS WITH MIN 2.5" LENGTH SCREWS.

2. DEAD BOLTS SHALL HAVE HARDENED INSERTS, DEADLOCKING LATCH WITH KEY OPERATED LOCKS ON EXTERIOR. STRAIGHT DEAD BOLTS SHALL HAVE A MIN. THROW OF 1", EMBEDMENT OF NOT LESS THAN 5/8". HOOKSHAPED OR EXPANDING LUG DEADBLOTS SHALL HAVE A MIN THROW OF 3/4". DOOR KNOBS AND DEADBOLT THUMB TURNS SHALL NOT BE SEPARATED BY MORE THAN 8 INCHES.

3. SLIDING DOORS SHALL BE PROVIDED WITH A DEVICE IN THE UPPER CHANNEL TO PROHIBIT RAISING AND REMOVING OF THE PANEL IN THE CLOSED OR PARTIALLY OPEN POSITION. SLIDING GLASS DOORS SHALL BE EQUIPPED WITH LOCKING DEVICES TO REMAIN INTACT WHEN TESTED PER SEC 6717.1.

GLAZING NOTES

1. GLAZING IN THE FOLLOWING LOCATIONS SHALL BE SAFETY GLAZING CONFORMING TO THE HUMAN IMPACT LOADS OF SECTION R308.3:
A) FIXED AND OPERABLE PANELS OF SWINGING, SLIDING AND BIFOLD DOOR ASSEMBLIES.
B) GLAZING IN AN INDIVIDUAL FIXED OR OPERABLE PANEL ADJACENT TO A DOOR WHERE THE NEAREST VERTICAL EDGE IS WITHIN A 24" ARC OF THE DOOR IN A CLOSED POSITION AND WHOSE BOTTOM EDGE IS LESS THEN 60" ABOVE THE FLOOR OR WALKING SURFACE.
C) GLAZING IN AN INDIVIDUAL FIXED OR OPERTABLE PANEL THAT MEETS ALL OF THE FOLLOWING CONDITIONS:
   1. EXPOSED AREAS OF AN INDIVIDUAL PANE GREATER THAN 9 SQUARE FEET.
   2. BOTTOM EDGE LESS THAN 18" ABOVE THE FLOOR
   3. TOP EDGE GREATER THAN 36" ABOVE THE FLOOR
   4. ONE OR MORE WALKING SURFACES WITHIN 36" HORIZONTALLY OF THE GLAZING
D) GLAZING IN RAILINGS
E) GLAZING IN ENCLOSURES FOR OR WALLS FACING HOT TUBS, WHIRLPOOLS, SAUNAS, SETAM ROOMS, BATHRUBS AND SHOWERS WHERE THE BOTTOM EDGE OF THE GLAZING IS LESS THAN 60" MEASURED VERTICALLY ABOVE ANY STANDING OR WALKING SURFACE.

2. CONTRACTOR TO VERIFY IN FIELD ALL WINDOW & WINDOW WALL OPENINGS PRIOR TO FABRICATION

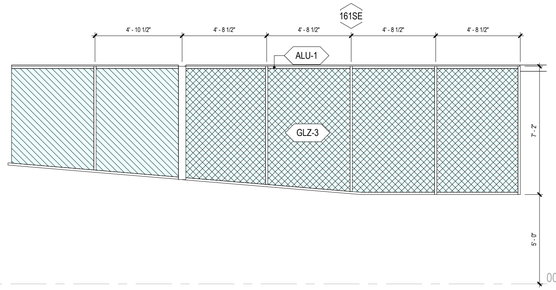

WWE - 161SE (SECURITY) 6
SCALE: 1/4" = 1'-0"

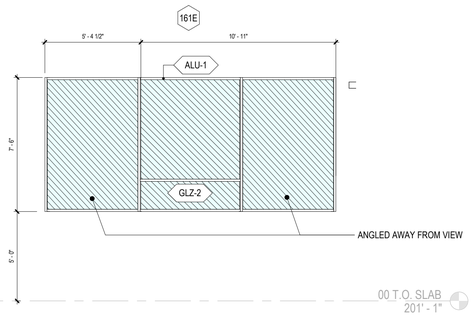

WWE - 161E (SECURITY) 5
SCALE: 1/4" = 1'-0"

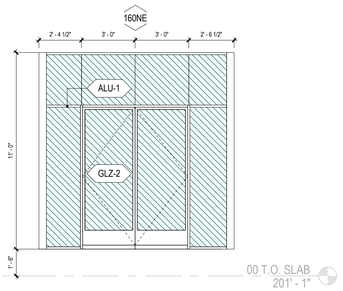

WWE - 161 NE (SECURITY) 4
SCALE: 1/4" = 1'-0"

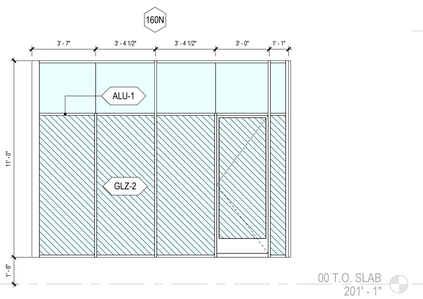

WWE - 160N (ENTRY) 3
SCALE: 1/4" = 1'-0"

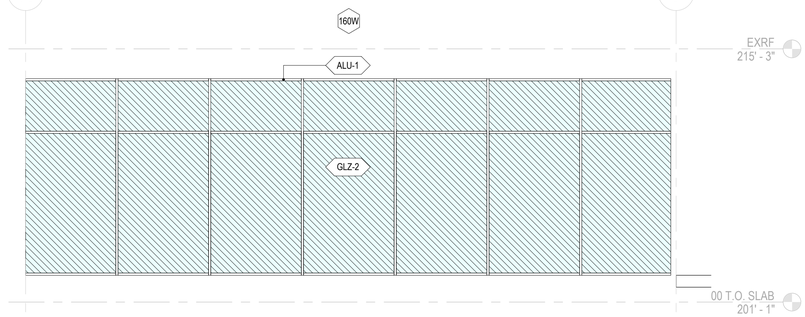

WWE - 161W (ENTRY) 2
SCALE: 1/4" = 1'-0"

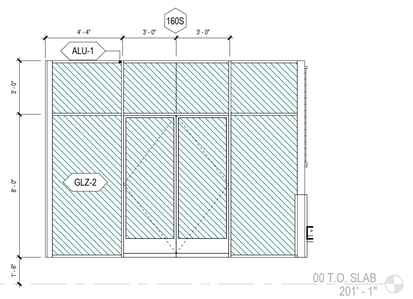

WWE - 161S (ENTRY) 1
SCALE: 1/4" = 1'-0"

NOT FOR CONSTRUCTION

17.NOV.2021
100% DESIGN SUBMITTAL

belzberg architects
2740 MAIN STREET
SANTA MONICA, CA 90405
310.453.9611
www.belzbergarchitects.com

#	DESCRIPTION	DATE

HOLOCAUST MUSEUM LA EXPANSION

100 THE GROVE DRIVE
LOS ANGELES, CA 90036

WINDOW WALL ELEVATIONS

PROJECT NUMBER: 17009

A611

11/18/2021 11:56:47 AM

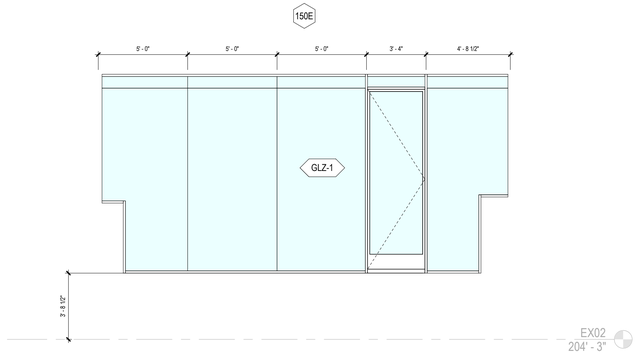

WWE - 150E (BOXCAR) 5

SCALE: 1/4" = 1'-0"

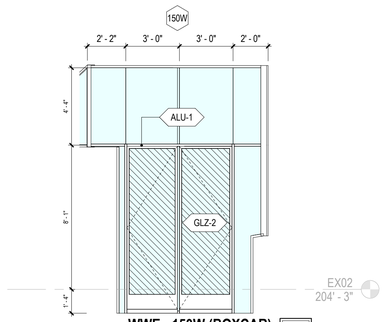

WWE - 150W (BOXCAR) 4

SCALE: 1/4" = 1'-0"

DOOR HARDWARE NOTES

1. ALL PIN-TYPE HINGES ACCESSIBLE FROM THE EXTERIOR SHALL HAVE NON REMOVABLE HINGE PINS. HINGES SHALL HAVE MIN. 1/4"Ø STEEL JAMB STUD WITH 1/4" MIN PROTECTION. STRIKE PLATE SHALL BE SECURED TO JAMBS WITH MIN 2.5" LENGTH SCREWS.

2. DEAD BOLTS SHALL HAVE HARDENED INSERTS, DEADLOCKING LATCH WITH KEY OPERATED LOCKS ON EXTERIOR. STRAIGHT DEAD BOLTS SHALL HAVE A MIN. THROW OF 1", EMBEDMENT OF NOT LESS THAN 5/8". HOOKSHAPED OR EXPANDING LUG DEADBLOTS SHALL HAVE A MIN THROW OF 3/4". DOOR KNOBS AND DEADBOLT THUMB TURNS SHALL NOT BE SEPARATED BY MORE THAN 8 INCHES.

3. SLIDING DOORS SHALL BE PROVIDED WITH A DEVICE IN THE UPPER CHANNEL TO PROHIBIT RAISING AND REMOVING OF THE PANEL IN THE CLOSED OR PARTIALLY OPEN POSITION. SLIDING GLASS DOORS SHALL BE EQUIPPED WITH LOCKING DEVICES TO REMAIN INTACT WHEN TESTED PER SEC 6717.1.

GLAZING NOTES

1. GLAZING IN THE FOLLOWING LOCATIONS SHALL BE SAFETY GLAZING CONFORMING TO THE HUMAN IMPACT LOADS OF SECTION R308.3:
A) FIXED AND OPERABLE PANELS OF SWINGING, SLIDING AND BIFOLD DOOR ASSEMBLIES.
B) GLAZING IN AN INDIVIDUAL FIXED OR OPERABLE PANEL ADJACENT TO A DOOR WHERE THE NEAREST VERTICAL EDGE IS WITHIN A 24" ARC OF THE DOOR IN A CLOSED POSITION AND WHOSE BOTTOM EDGE IS LESS THEN 60" ABOVE THE FLOOR OR WALKING SURFACE.
C) GLAZING IN AN INDIVIDUAL FIXED OR OPERTABLE PANEL THAT MEETS ALL OF THE FOLLOWING CONDITIONS:
   1. EXPOSED AREAS OF AN INDIVIDUAL PANE GREATER THAN 9 SQUARE FEET.
   2. BOTTOM EDGE LESS THAN 18" ABOVE THE FLOOR
   3. TOP EDGE GREATER THAN 36" ABOVE THE FLOOR
   4. ONE OR MORE WALKING SURFACES WITHIN 36" HORIZONTALLY OF THE GLAZING
D) GLAZING IN RAILINGS
E) GLAZING IN ENCLOSURES FOR OR WALLS FACING HOT TUBS, WHIRLPOOLS, SAUNAS, SETAM ROOMS, BATHRUBS AND SHOWERS WHERE THE BOTTOM EDGE OF THE GLAZING IS LESS THAN 60" MEASURED VERTICALLY ABOVE ANY STANDING OR WALKING SURFACE.

2. CONTRACTOR TO VERIFY IN FIELD ALL WINDOW & WINDOW WALL OPENINGS PRIOR TO FABRICATION

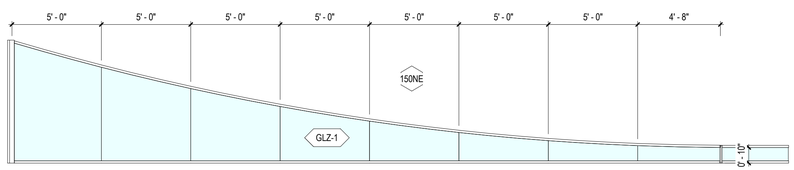

WWE - 150NE (BOXCAR) 3

SCALE: 1/4" = 1'-0"

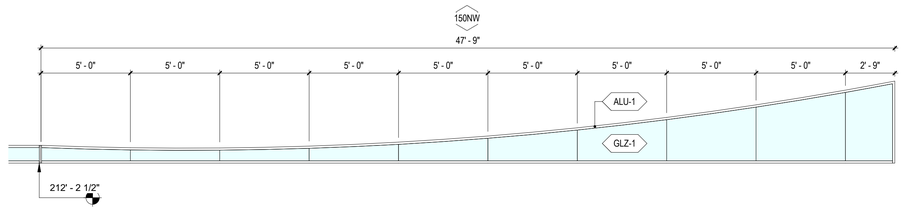

WWE - 150NW (BOXCAR) 2

SCALE: 1/4" = 1'-0"

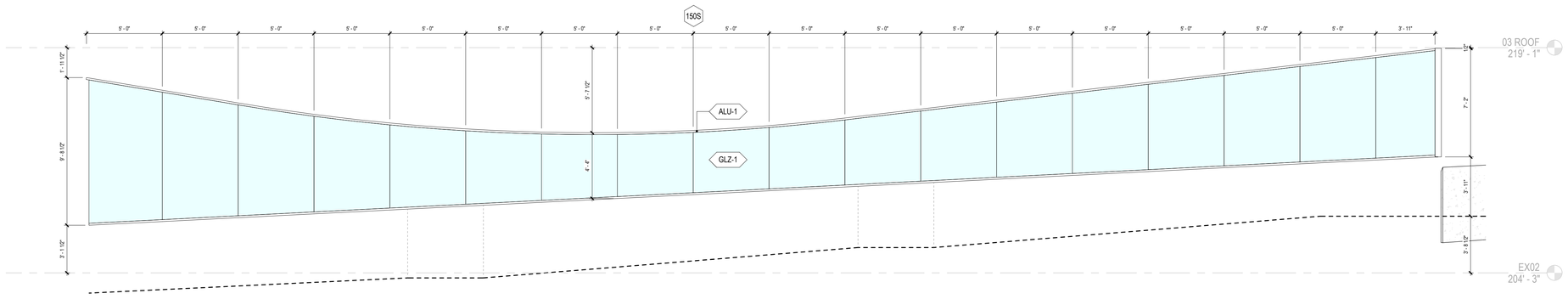

WWE - 150S (BOXCAR) 1

SCALE: 1/4" = 1'-0"

NOT FOR CONSTRUCTION

17.NOV.2021
100% DESIGN SUBMITTAL

ba
belzberg architects
2740 MAIN STREET
SANTA MONICA, CA 90405
310.453.9611
www.belzbergarchitects.com

#	DESCRIPTION	DATE

HOLOCAUST MUSEUM LA EXPANSION

100 THE GROVE DRIVE
LOS ANGELES, CA 90036

WINDOW WALL ELEVATIONS

PROJECT NUMBER: 17009

A612

11/18/2021 11:56:49 AM

DOOR SCHEDULE

DOOR #	FROM ROOM	TO ROOM	TYPE	WIDTH	HEIGHT	HW GROUP	DOOR TYPE	FRAME TYPE	COMMENTS
102	RR VESTIBULE	GIFT SHOP	B	5' - 0"	10' - 0"				
103	RR VESTIBULE	RR (U)	C	3' - 0"	8' - 0"		SOLID CORE, PAINT FINISH		
104	RR VESTIBULE	RR (W)	C	3' - 0"	8' - 0"		SOLID CORE, PAINT FINISH		
105	RR(M)	RR VESTIBULE	C	3' - 0"	8' - 0"		SOLID CORE, PAINT FINISH		
106.1		DIT THEATER	C	3' - 0"	8' - 0"		SOLID CORE, PAINT FINISH		
107.1	OFFICE	CLASSROOM B	C	3' - 0"	8' - 0"		SOLID CORE, PAINT FINISH		
108.1	COURTYARD	GIFT SHOP	A	3' - 0"	8' - 10 1/2"		GLZ-1		
108.2	COURTYARD	GIFT SHOP	A	3' - 0"	8' - 10 1/2"		GLZ-1		
108.3		GALLERY	SINGLE FLUSH, JAMB REVEAL	4' - 0"	10' - 0"				
108.4	GALLERY	VESTIBULE	B	5' - 0"	10' - 0"				
108A	GIFT SHOP	GALLERY	A	2' - 11 1/2"	8' - 4"				
108B	GIFT SHOP	GALLERY	A	2' - 11 1/2"	8' - 4"				
109	CLASSROOM A	VESTIBULE	C	3' - 0"	8' - 0"		SOLID CORE, PAINT FINISH		
110	VESTIBULE	CLASSROOM B	C	3' - 0"	8' - 0"		SOLID CORE, PAINT FINISH		
111		STORAGE	C	3' - 0"	7' - 0"				
120.1	AUDITORIUM	CORRIDOR SE		4' - 0"	8' - 0"		METAL CORE, PAINT FINISH		RATED, 5-MINUTE FORCED ENTRY RESISTANT, STC55 MIN
120.2	AUDITORIUM	CORRIDOR SW	C	3' - 0"	8' - 0"		METAL CORE, PAINT FINISH		RATED, 5-MINUTE FORCED ENTRY RESISTANT, STC55 MIN
120.3	BACKSTAGE	AUDITORIUM	C	3' - 0"	8' - 0"				
120.4	BACKSTAGE	AUDITORIUM	C	3' - 0"	8' - 0"				
120.5	AUDITORIUM	AUDITORIUM		2' - 6"	7' - 0"				
121.1	CORRIDOR SW	SERVICE AREA	C	3' - 0"	8' - 0"		METAL CORE, PAINT FINISH		RATED, 5-MINUTE FORCED ENTRY RESISTANT
121.2	CLASSROOM A	CORRIDOR SW	C	3' - 0"	8' - 0"		SOLID CORE, PAINT FINISH		
122.1	SERVICE AREA	CORRIDOR SE	D	7' - 0"	8' - 0"		METAL CORE, PAINT FINISH		RATED, 5-MINUTE FORCED ENTRY RESISTANT
122.2	GALLERY	CORRIDOR SE	D	7' - 0"	8' - 0"		SOLID CORE, PAINT FINISH		RATED
123	SERVICE AREA	BACKSTAGE	C	3' - 0"	8' - 0"				RATED, 5-MINUTE FORCED ENTRY RESISTANT
124	SERVICE AREA	STORAGE	F	9' - 7"	9' - 0"				
125	BACKSTAGE	GRN RM	C	3' - 0"	8' - 0"				
126	GRN RM	RR	C	3' - 0"	8' - 0"				
130.1	STORAGE								
130.2	STORAGE	IT	C	3' - 0"	8' - 0"				
131.1	SERVICE AREA		C	3' - 0"	8' - 0"		HOLLOW METAL CORE, PAINT FINISH		
131.2	SERVICE AREA		D	7' - 0"	8' - 0"		HOLLOW METAL CORE, PAINT FINISH		
150.1.1	COURTYARD	BOX CAR PAVILION	A	2' - 11 1/2"	9' - 4"		GLZ-1		
150.1.2	COURTYARD	BOX CAR PAVILION	A	2' - 10"	9' - 4"		GLZ-1		
150.2	BOX CAR PAVILION	REFLECTION GARDEN	A	3' - 6"	8' - 0"		GLZ-1		
150.3		BOX CAR PAVILION	A	3' - 2 1/2"	10' - 3 1/2"		GLZ-1		
160.1		SECURITY	A	2' - 11 1/2"	7' - 11 1/2"		GLZ-1		
160.2		SECURITY	A	2' - 11 1/2"	7' - 11 1/2"				
160.2.1	SECURITY	COURTYARD	A	2' - 11"	7' - 11 1/2"		GLZ-1		
160.2.2	SECURITY	COURTYARD	A	2' - 11 1/2"	7' - 11 1/2"		GLZ-1		
160.3	SECURITY	COURTYARD	A	2' - 10 1/2"	7' - 11 1/2"		GLZ-1		
161	RECEPTION	SECURITY	A	2' - 10 1/2"	7' - 11 1/2"		GLZ-1		
201		PROJECTOR ROOM	C	3' - 0"	8' - 0"		SOLID CORE, PAINT FINISH		

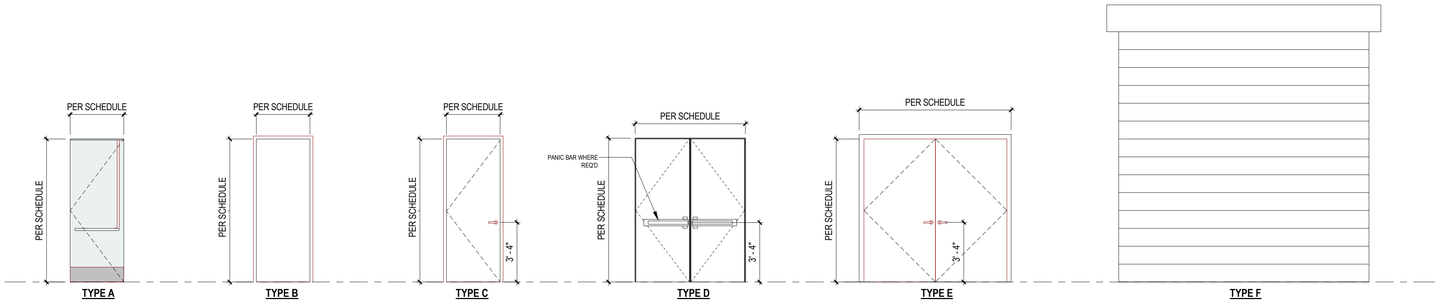

DOOR HARDWARE NOTES

1. ALL PIN-TYPE HINGES ACCESSIBLE FROM THE EXTERIOR SHALL HAVE NON REMOVABLE HINGE PINS. HINGES SHALL HAVE MIN. 1/4"Ø STEEL JAMB STUD WITH 1/4" MIN PROTECTION. STRIKE PLATE SHALL BE SECURED TO JAMBS WITH MIN 2.5" LENGTH SCREWS.

2. DEAD BOLTS SHALL HAVE HARDENED INSERTS, DEADLOCKING LATCH WITH KEY OPERATED LOCKS ON EXTERIOR. STRAIGHT DEAD BOLTS SHALL HAVE A MIN. THROW OF 1", EMBEDMENT OF NOT LESS THAN 5/8". HOOKSHAPED OR EXPANDING LUG DEADBLOTS SHALL HAVE A MIN THROW OF 3/4". DOOR KNOBS AND DEADBOLT THUMB TURNS SHALL NOT BE SEPARATED BY MORE THAN 8 INCHES.

3. SLIDING DOORS SHALL BE PROVIDED WITH A DEVICE IN THE UPPER CHANNEL TO PROHIBIT RAISING AND REMOVING OF THE PANEL IN THE CLOSED OR PARTIALLY OPEN POSITION. SLIDING GLASS DOORS SHALL BE EQUIPPED WITH LOCKING DEVICES TO REMAIN INTACT WHEN TESTED PER SEC 6717.1.

GLAZING NOTES

1. GLAZING IN THE FOLLOWING LOCATIONS SHALL BE SAFETY GLAZING CONFORMING TO THE HUMAN IMPACT LOADS OF SECTION R308.3:
A) FIXED AND OPERABLE PANELS OF SWINGING, SLIDING AND BIFOLD DOOR ASSEMBLIES.
B) GLAZING IN AN INDIVIDUAL FIXED OR OPERABLE PANEL ADJACENT TO A DOOR WHERE THE NEAREST VERTICAL EDGE IS WITHIN A 24" ARC OF THE DOOR IN A CLOSED POSITION AND WHOSE BOTTOM EDGE IS LESS THEN 60" ABOVE THE FLOOR OR WALKING SURFACE.
C) GLAZING IN AN INDIVIDUAL FIXED OR OPERTABLE PANEL THAT MEETS ALL OF THE FOLLOWING CONDITIONS:
   1. EXPOSED AREAS OF AN INDIVIDUAL PANE GREATER THAN 9 SQUARE FEET.
   2. BOTTOM EDGE LESS THAN 18" ABOVE THE FLOOR
   3. TOP EDGE GREATER THAN 36" ABOVE THE FLOOR
   4. ONE OR MORE WALKING SURFACES WITHIN 36" HORIZONTALLY OF THE GLAZING
D) GLAZING IN RAILINGS
E) GLAZING IN ENCLOSURES FOR OR WALLS FACING HOT TUBS, WHIRLPOOLS, SAUNAS, SETAM ROOMS, BATHRUBS AND SHOWERS WHERE THE BOTTOM EDGE OF THE GLAZING IS LESS THAN 60" MEASURED VERTICALLY ABOVE ANY STANDING OR WALKING SURFACE.

2. CONTRACTOR TO VERIFY IN FIELD ALL WINDOW & WINDOW WALL OPENINGS PRIOR TO FABRICATION

NOT FOR CONSTRUCTION

17.NOV.2021
100% DESIGN SUBMITTAL

ba
belzberg architects
2740 MAIN STREET
SANTA MONICA, CA 90405
310.453.9611
www.belzbergarchitects.com

#	DESCRIPTION	DATE

HOLOCAUST MUSEUM LA EXPANSION

100 THE GROVE DRIVE
LOS ANGELES, CA 90036

DOOR SCHEDULE

PROJECT NUMBER: 17009

A620

11/18/2021 11:35:51 AM

WALL CORE TYPES

TYPE	DESCRIPTION
A	8" ARCHITECTURAL CAST-IN-PLACE CONCRETE
B	10" CAST-IN-PLACE CONCRETE
C	8" CMU, SEE STRUCTURAL
D	NOT USED
E	NOT USED
F	NOT USED
G	NOT USED
2	7/8" FURRING STRIPS
3	MOVEABLE PARTITION
4	3-5/8" METAL STUDS @ 16" O.C.
5	5-1/2" METAL STUDS @ 16" O.C.
6	NOT USED
7	8" METAL STUDS @ 16" O.C.
8	3-5/8" DOUBLE STUD W/ 1/2" AIR GAP @ 16" O.C. (7-3/4" TOTAL DEPTH)

WALL TYPE NOTES

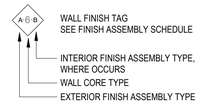

EXAMPLES

"A6B" IS TYPE "6" CORE (2X6 STUDS), WITH TYPE "A" EXTERIOR FINISH AND TYPE "B" INTERIOR FINISH

"CBC" IS TYPE "B" CORE (10" CONCRETE), WITH TYPE "C" FINISH BOTH SIDES

"DA" IS TYPE "A" CORE (8" CONCRETE) WITH TYPE "B" FINISH ON EXTERIOR (NO INTERIOR FINISH)

WALL FINISH ASSEMBLY TYPES

TYPE	DESCRIPTION
	INTERIOR ASSEMBLIES
A	5/8" GYP BOARD WITH LEVEL 5 FINISH; MOISTURE-RESISTANT IN WET AREAS, TYPE X AT OCC SEP
B	5/8" GYP BOARD WITH LEVEL 5 FINISH; OVER 1/2" PLYWOOD; TYPE X AT OCC SEP
B2	DOUBLE 5/8" GYP BOARD WITH LEVEL 5 FINISH OVER 1/2" PLYWOOD, TYPE X AT OCC SEP
C	25MM SOUND ABSORBING SMOOTH PLASTER FINISH O/ 20GA 7/8" FRAMING CHANNELS O/ 3/8" MIN AIR GAP
D	5/8" GYP BOARD WITH LEVEL 5 FINISH; OVER 1/2" PLYWOOD; OVER BALLISTIC PANELS (UP TO 78" AFF); TYPE X AT OCC SEP
D2	DOUBLE 5/8" GYP BOARD WITH LEVEL 5 FINISH; OVER 1/2" PLYWOOD; OVER BALLISTIC PANELS (UP TO 78" AFF); TYPE X AT OCC SEP
E	NOT USED
F	NOT USED
G	NOT USED
H	FABRIC / WOOD PANELLING
I	NOT USED
J	ALUMINUM COMPOSITE CLADDING, ROUTE & RETURN DRY SEAL JOINTS, ON 1/2" PLYWOOD. ANODIZED FINISH, COLOR BY ARCHITECT.
K	TILE ON THINSET MORTAR OVER CEMENT BOARD
L	NOT USED
M	NOT USED
N	NOT USED
O	NOT USED
	EXTERIOR ASSEMBLIES
P	1/2" PLYWOOD SHEATHING ONLY (NO FINISH)
Q	SMOOTH TROWEL STUCCO PARGE COAT
R	FLUID-APPLIED WATEPROOF MEMBRANE AND DRAINAGE COMPOSITE (BELOW GRADE)
S	3-COAT SMOOTH TROWEL STUCCO PLASTER AND LATH, 1/4" SPUN FIBER RAINSCREEN DRAINAGE CHANNEL, WEATHER BARRIER, ON 1/2" PLYWOOD
T	PRECAST CONCRETE PANELS ON HIDDEN CLEATS, OVER WEATHER BARRIER
U	NOT USED
V	NOT USED

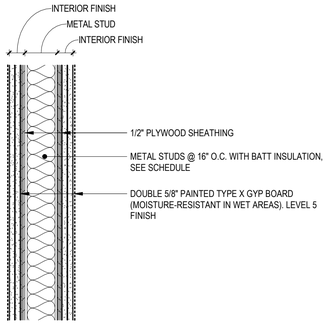

TYP. INTERIOR GWB WALL 6
SCALE: 1 1/2" = 1'-0"

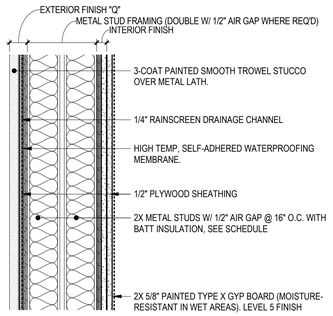

TYP. EXTERIOR STUCCO WALL 2
SCALE: 1 1/2" = 1'-0"

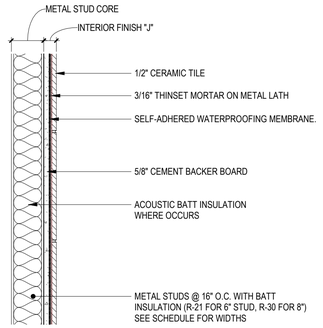

TYP. INTERIOR CERAMIC TILE 9
SCALE: 1 1/2" = 1'-0"

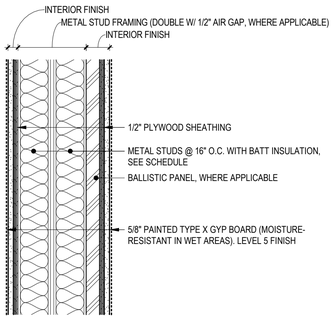

TYP. INTERIOR GWB WALL W/ BALLISTIC PANELLING 5
SCALE: 1 1/2" = 1'-0"

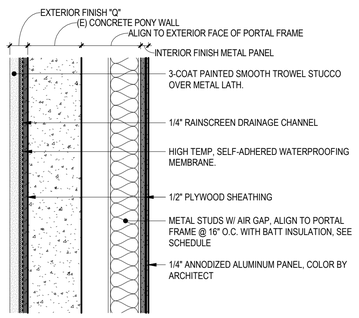

TYP. EXTERIOR STUCCO WALL O/ (E) CONC WALL 3
SCALE: 1 1/2" = 1'-0"

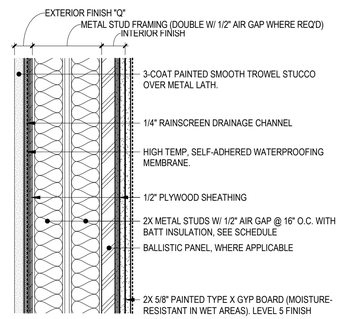

TYP. EXTERIOR STUCCO WALL W/ BALLISTIC PANELLING 1
SCALE: 1 1/2" = 1'-0"

NOT FOR CONSTRUCTION

17.NOV.2021
100% DESIGN SUBMITTAL

ba
belzberg architects
2740 MAIN STREET
SANTA MONICA, CA 90405
310.453.9611
www.belzbergarchitects.com

#	DESCRIPTION	DATE

HOLOCAUST MUSEUM LA EXPANSION

100 THE GROVE DRIVE
LOS ANGELES, CA 90036

WALL AND CEILING TYPES

PROJECT NUMBER: 17009

A650

11/18/2021 11:56:32 AM

STRUCTURAL DRAWING LIST	
S000	DRAWING LIST
S001	GENERAL NOTES
S002	GENERAL NOTES
S003	GENERAL NOTES
S004	STATEMENT OF SPECIAL INSPECTIONS
S005	MOMENT FRAME DETAILS - LADBS QUALITY ASSURANCE SHEET 1 OF 3
S006	MOMENT FRAME DETAILS - LADBS QUALITY ASSURANCE SHEET 2 OF 3
S007	MOMENT FRAME DETAILS - LADBS QUALITY ASSURANCE SHEET 3 OF 3
S008	STRUCTURAL OBSERVATION REQUIREMENTS
S201	OVERALL FOUNDATION PLAN
S201A	LEARNING CENTER FOUNDATION PLAN - SOUTH
S201B	LEARNING CENTER FOUNDATION PLAN - NORTH
S201C	ENTRY PAVILION/BOXCAR PAVILION FOUNDATION PLAN
S211	OVERALL GROUND FLOOR PLAN
S211A	LEARNING CENTER GROUND FLOOR PLAN - SOUTH
S211B	LEARNING CENTER GROUND FLOOR PLAN - NORTH
S211C	ENTRY PAVILION/BOXCAR PAVILION GROUND FLOOR PLAN
S211L	OVERALL GROUND FLOOR PLAN - LOADING
S221	OVERALL ROOF PLAN
S221A	LEARNING CENTER ROOF PLAN - SOUTH
S221B	LEARNING CENTER ROOF PLAN - NORTH
S221C	ENTRY PAVILION/BOXCAR PAVILION ROOF PLAN
S221L	OVERALL ROOF PLAN - LOADING
S227	CANOPY ROOF FRAMING PLAN
S301	LEARNING CENTER TRUSS ELEVATION
S311	LEARNING CENTER STRUCTURAL MOMENT FRAME ELEVATIONS
S312	LEARNING CENTER STRUCTURAL BRACED FRAME ELEVATIONS
S313	ENTRY PAVILION STRUCTURAL MOMENT FRAME ELEVATIONS
S323	BOX CAR PAVILION SPECIAL MOMENT FRAME ELEVATIONS
S331	LEARNING CENTER AUDITORIUM SECTIONS
S332	BOX CAR AND CANOPY ELEVATIONS
S333	CANOPY ELEVATIONS
S610	STRUCTURAL PILE DETAILS
S611	STRUCTURAL PILE CAP DETAILS
S612	STRUCTURAL PILE CAP DETAILS
S620	REINFORCED SCHEDULE LAP AND DEVELOPMENT LENGTH SCHEDULE
S621	REINFORCED SCHEDULE LAP AND DEVELOPMENT LENGTH SCHEDULE
S622	TYPICAL SLAB ON GRADE DETAILS
S623	TYPICAL SLAB ON GRADE DETAILS
S624	TYPICAL CONCRETE DETAILS
S625	TYPICAL CONCRETE DETAILS
S626	TYPICAL CONCRETE DETAILS
S630	TYPICAL STEEL DETAILS
S631	TYPICAL STEEL DETAILS
S632	TYPICAL STEEL DETAILS
S633	TYPICAL STEEL DETAILS
S634	TYPICAL STEEL DETAILS
S635	TYPICAL STEEL DETAILS
S636	TYPICAL STEEL DETAILS
S637	TYPICAL STEEL DETAILS
S638	SPECIAL MOMENT FRAME DETAILS
S640	SFRS STEEL SPECIAL CONCENTRIC BRACED FRAME DETAILS
S650	TYPICAL METAL DECK DETAILS
S651	TYPICAL METAL DECK DETAILS
S652	TYPICAL METAL DECK DETAILS
S653	TYPICAL METAL DECK DETAILS
S654	TYPICAL METAL DECK DETAILS
S655	TYPICAL METAL DECK DETAILS

NOT FOR CONSTRUCTION

09.AUG.21

belzberg architects

2321 MAIN STREET
SANTA MONICA, CA 90405
310.453.9611

www.belzbergarchitects.com

ARUP

Arup North America Ltd.
900 Wilshire Boulevard,
19th Floor
Los Angeles CA 90017
Tel: 310 578 4400
www.arup.com

#	DESCRIPTION	DATE

DRAWING LIST

PROJECT NUMBER:

S000

8/10/2021 5:29:07 PM

TEMPORARY WORK

1. ALL TEMPORARY WORK SHALL BE DESIGNED, INSTALLED AND CARRIED OUT BY THE CONTRACTOR IN ACCORDANCE WITH THE REQUIREMENTS OF THE PROJECT GOVERNING CODE(S).
2. THE DRAWINGS INDICATE THE COMPLETED STRUCTURE. THE CONTRACTOR IS FULLY RESPONSIBLE FOR ALL TEMPORARY MEASURES NECESSARY FOR ERECTION.
3. IT IS THE RESPONSIBILITY OF THE CONTRACTOR TO PROVIDE PROPER SHORING AND BRACING WHEREVER NECESSARY. ALL TEMPORARY SHORING/BRACING SHALL BE DESIGNED BY A CIVIL AND/OR STRUCTURAL ENGINEER REGISTERED IN CALIFORNIA.
4. THE CONTRACTOR IS RESPONSIBLE FOR SUBMITTING THE SHORING DRAWINGS AND CALCULATIONS TO THE AUTHORITY HAVING JURISDICTION AS REQUIRED.
5. CONSTRUCTION LOADS OR TEMPORARY LOADS SHALL NOT EXCEED THE DESIGN LIVE LOADS PER SQUARE FOOT AS SHOWN ON THE DRAWINGS. PROVIDE SHORING AND/OR BRACING WHERE THE STRUCTURE HAS NOT ATTAINED ITS DESIGN STRENGTH.

CONCRETE

1. STRUCTURAL CONCRETE STRENGTHS AND TYPES USED IN THIS PROJECT SHALL BE AS FOLLOWS, UNLESS NOTED OTHERWISE:

LOCATION IN STRUCTURE	f'c	DENSITY
FOUNDATIONS INCLUDING BUT NOT LIMITED TO BORED PILES, PILE CAPS, GRADE BEAMS, TIE BEAMS, FOUNDATION WALLS, FOUNDATION PILASTERS, STUB WALLS	4000 PSI	150 PCF
SUSPENDED REINFORCED CONCRETE SLABS AT FOUNDATION LEVEL NOT SUPPORTED ON GRADE	5000 PSI	150 PCF
SUPERSTRUCTURE WALLS, COLUMNS, BEAMS	5000 PSI	150 PCF
LIGHTWEIGHT CONCRETE FILL ON METAL DECK (INCLUDING CURBS, EQUIPMENT PADS, ETC. ON METAL DECK SLABS)	4000 PSI	115 PCF
ALL OTHER CONCRETE	4000 PSI	150 PCF

f'c IS THE 28-DAY COMPRESSIVE STRENGTH AS DEFINED IN ACI 318.

2. LIGHTWEIGHT CONCRETE SHALL BE SAND LIGHTWEIGHT CONCRETE.
3. ALL CONSTRUCTION JOINTS SHALL BE CONSTRUCTED IN ACCORDANCE WITH THE TYPICAL CONSTRUCTION JOINT DETAILS SHOWN ON THE STRUCTURAL AND ARCHITECTURAL DRAWINGS. AT MINIMUM THE CONTRACTOR SHALL: CLEAN AND ROUGHEN TO 1/4" AMPLITUDE ALL CONCRETE CONSTRUCTION JOINT SURFACES AGAINST WHICH CONCRETE IS TO BE PLACED. ALL CONSTRUCTION JOINTS SHALL BE WETTED AND STANDING WATER SHALL BE REMOVED IMMEDIATELY BEFORE NEW CONCRETE IS PLACED. PROVIDE CLASS "B" SPLICE AT ALL REINFORCEMENT CROSSING CONSTRUCTION JOINTS, TYPICAL UNLESS NOTED OTHERWISE.
4. THE CONTRACTOR SHALL COORDINATE ALL EXPOSED CONSTRUCTION, MOVEMENT JOINTS AND CONTROL JOINTS WITH THE ARCHITECT. IN ADDITION:
   - B. THE CONTRACTOR SHALL SUBMIT A CONSTRUCTION AND/OR CONTROL JOINT AND POUR SEQUENCE PLAN FOR ALL STRUCTURAL SLABS: SLAB ON METAL DECK, SUSPENDED REINFORCED CONCRETE SLABS AND SLAB ON GRADEFOLLOWING THE SPECIFICATION REQUIREMENTS.
   - C. FOR COLUMNS AND PILASTERS AND WALLS THE CONTRACTOR SHALL PLACE CONSTRUCTION JOINTS AT TOP OR BOTTOM OF INTERSECTING BEAM UNLESS NOTED OTHERWISE ON THE DRAWINGS. CONSTRUCTION JOINTS SHALL BE SHOWN ON SHOP DRAWINGS.
   - D. THE CONTRACTOR SHALL CAST BEAMS AND GRADE BEAMS SHALL CAST CONTINUOUSLY FROM SUPPORT TO SUPPORT UNLESS NOTED OTHERWISE ON DRAWINGS OR AS ACCEPTED AS PART OF A SLAB CONSTRUCTION JOINT SUBMITTAL. THE CONTRACTOR SHALL NOT PLACE ANY HORIZONTAL CONSTRUCTION JOINTS INTO BEAMS OR GRADE BEAMS.
5. PROVIDE SLEEVES FOR PLUMBING AND ELECTRICAL OPENINGS IN CONCRETE WALLS AND SLABS BEFORE PLACING CONCRETE. DO NOT CUT ANY REINFORCING WHICH MAY CONFLICT. PIPES AND/OR CONDUITS SHALL NOT PASS THROUGH COLUMNS AND BEAMS UNLESS SPECIFICALLY DETAILED ON THE STRUCTURAL DRAWINGS.
6. CORING OF CONCRETE AFTER PLACEMENT IS NOT PERMITTED
7. CLEAR COVER OF CONCRETE OVER OUTER REINFORCING BARS SHALL BE AS FOLLOWS. ALL REINFORCEMENT INCLUDING WWF SHALL BE CHAIRED UP.

LOCATION IN STRUCTURE		CLEAR COVER
CONCRETE FILL ON METAL DECK		1" FROM TOP, UNO
WALLS (NOT CAST AGAINST EARTH)	CONCRETE NOT EXPOSED TO WEATHER OR IN CONTACT WITH GROUND	3/4" (#11 AND SMALLER) 1 1/2" (#14 AND #18)
	CONCRETE EXPOSED TO EARTH OR WEATHER	1 1/2" (#5 OR SMALLER) 2" (#6 OR LARGER)
BEAMS, COLUMNS, PILASTERS (PRIMARY REINF., TIES, OR STIRRUPS)	CONCRETE NOT EXPOSED TO WEATHER OR IN CONTACT WITH GROUND	1 1/2"
	CONCRETE EXPOSED TO EARTH OR WEATHER	1 1/2" (#5 OR SMALLER) 2" (#6 OR LARGER)
FOOTINGS, PILE CAPS, GRADE BEAMS	TOP BARS	2"
	BOTTOM BARS & SIDE BARS	3"
SLAB ON GRADE	INTERIOR FACES	1 1/2" FROM TOP (INTERIOR SLAB) 2" FROM TOP (EXTERIOR SLAB U.N.O.)
FORMED SLABS	CONCRETE NOT EXPOSED TO WEATHER OR IN CONTACT WITH GROUND	3/4" (#11 AND SMALLER) 1 1/2" (#14 AND #18)
	CONCRETE EXPOSED TO EARTH OR WEATHER	1 1/2" (#5 OR SMALLER) 2" (#6 OR LARGER)
ALL CONCRETE CAST AGAINST EARTH		3"

8. ALL CONCRETE MIXES SHALL COMPLY WITH THE REQUIREMENTS OF THE PROJECT GOVERNING CODE(S). PREPARE AND SUBMIT MIX DESIGNS FOR EACH TYPE AND STRENGTH. CONCRETE MIX DESIGNS SHALL BE SEALED AND SIGNED BY A CIVIL ENGINEER REGISTERED IN THE STATE OF CALIFORNIA.
9. ALL TRANSIT-MIXED CONCRETE SHALL BE PROVIDED BY A CONCRETE PLANT WHICH COMPLIES FULLY WITH THE REQUIREMENTS OF PROJECT GOVERNING CODE(S) AND HAS BEEN CERTIFIED BY AN AGENCY ACCEPTABLE TO THE BUILDING DEPARTMENT SO THAT BATCH PLANT INSPECTION MAY BE WAIVED.
10. ARCHITECTURAL TOPPING SLABS SHALL BE PLACED AFTER CONCRETE FRAMING AND/OR CONCRETE FILL ON METAL DECK HAS REACHED THE DESIGN COMPRESSIVE STRENGTH.
11. THE PROJECTING CORNERS OF COLUMNS, BEAMS, WALLS ETC. SHALL BE FORMED WITH 3/4" CHAMFER, UNLESS NOTED OTHERWISE ON ARCHITECTURAL DRAWINGS.
12. ALL CONCRETE ELEMENTS SHALL BE REINFORCED SINCE NO PLAIN CONCRETE IS PERMITTED. ALL CONCRETE ELEMENTS SHALL BE REINFORCED WITH A MINIMUM STEEL AREA OF 0.0018 TIMES THE CROSS-SECTIONAL AREA OF CONCRETE ELEMENT CONTINUOUS IN EACH DIRECTION, TYPICAL UNLESS NOTED OTHERWISE.
13. THE CONTRACTOR SHALL NOTIFY THE TESTING AGENCY AND OWNER 48 HOURS BEFORE POURING OF CONCRETE FOR INSPECTION OF REINFORCEMENT LAYOUT. NO CONCRETE SHALL BE POURED UNLESS ALL REINFORCEMENT AND INSTALLATIONS HAVE BEEN INSPECTED AND APPROVED BY THE TESTING AGENCEY.
14. CONCRETE CAST ON SLOPED SURFACES SHALL BEGIN AT THE LOWEST ELEVATION AND CONTINUE MONOLITHICALLY TOWARD THE HIGHER ELEVATION UNTIL THE INTENDED CAST IS COMPLETED.
15. THE DEPTH OF REVEALS IN CONCRETE WALLS SHALL NOT BE GREATER THAN 3/8". WHERE REVEALS OCCUR IN CONCRETE WALLS, ADD 3/8" TO THE CLEAR COVER TO REINFORCEMENT BARS SHOWN ABOVE.
16. NO ALUMINUM SHALL BE CAST IN CONCRETE.
17. REFER TO ARCHITECTURAL DRAWINGS FOR FINISHING OF ALL EXPOSED CONCRETE SURFACES.

DESIGN BASIS

1. SUPERIMPOSED DEAD LOADS: REFER TO LOADING DIAGRAMS.
2. LIVE LOADS: REFER TO LOADING DIAGRAMS.
3. WIND LOADS:

PARAMETER	VALUE
BASIC WIND SPEED, V	101 MPH
WIND IMPORTANCE FACTOR, I	1.00
WIND EXPOSURE CATEGORY	B
RISK CATEGORY	III

4. SEISMIC LOADS:

   THE SEISMIC LOADS ARE BASED ON THE SITE CLASS AND GENERAL SEISMIC DESIGN PARAMETERS PROVIDED BY GROUP DELTA IN: "GEOTECHNICAL RECOMMENDATIONS REPORT PROPOSED LOS ANGELES HOLOCAUST MUSEUM ADDITION", DATED JULY 6, 2021.

GENERAL SEISMIC DESIGN PARAMETER	VALUE
SITE CLASS	D
SHORT PERIOD SITE COEFFICIENT, Fa	1.0
1 SEC PERIOD SITE COEFFICIENT, Fv	1.7
SHORT PERIOD SPECTRAL RESPONSE ACCELERATION, Ss	2.066 g
1 SEC PERIOD SPECTRAL RESPONSE ACCELERATION, S1	0.738 g
Sms	2.066 g
Sm1	1.254 g
Sds	1.377 g
Sd1	0.836 g
PGAM	0.973 g

LEARNING CENTER - RISK CATEGORY, IMPORTANCE FACTOR AND SFRS CLASSIFICATION	VALUE
RISK CATEGORY	III
SEISMIC DESIGN CATEGORY	D
SEISMIC IMPORTANCE FACTOR, Ie	1.25
SEISMIC WEIGHT, w	3210kips
ANALYSIS PROCEDURE	EQUIVALENT LATERAL FORCE PROCEDURE (ELF)
SFRS NORTH-SOUTH DIRECTION	
SEISMIC FORCE RESISTING SYSTEM (SFRS) PER ASCE 7	SPECIAL CONCENTRIC BRACED FRAME (SCBF)
RESPONSE MODIFICATION COEFFICIENT, R	6
SYSTEM OVERSTRENGTH FACTOR, Ω0	2
DEFLECTION AMPLIFICATION FACTOR, Cd	5
SEISMIC RESPONSE COEFFICIENT, Cs	0.29
DESIGN BASE SHEAR, V	930kips
MAXIMUM STORY DRIFT AT DESIGN LATERAL FORCE RELATIVE TO RIGID BASE	1.5in
SFRS EAST-WEST DIRECTION	
SEISMIC FORCE RESISTING SYSTEM (SFRS) PER ASCE 7	STEEL SPECIAL MOMENT FRAMES (SMF): WELDED UNREINFORCED FLANGE-WELDED WEB (WUF-W) MOMENT CONNECTION MEETING PREQUALIFICATION REQUIREMENTS PER AISC358
RESPONSE MODIFICATION COEFFICIENT, R	8
SYSTEM OVERSTRENGTH FACTOR, Ω0	3
DEFLECTION AMPLIFICATION FACTOR, Cd	5.5
SEISMIC RESPONSE COEFFICIENT, Cs	0.22
DESIGN BASE SHEAR, V	705kips
MAXIMUM STORY DRIFT AT DESIGN LATERAL FORCE RELATIVE TO RIGID BASE	2.5in

ENTRY PAVILION - RISK CATEGORY, IMPORTANCE FACTOR AND SFRS CLASSIFICATION	VALUE
RISK CATEGORY	III
SEISMIC DESIGN CATEGORY	D
SEISMIC IMPORTANCE FACTOR, Ie	1.25
SEISMIC WEIGHT, w	105kips
ANALYSIS PROCEDURE	EQUIVALENT LATERAL FORCE PROCEDURE (ELF)
SEISMIC FORCE RESISTING SYSTEM (SFRS) PER ASCE 7	STEEL SPECIAL MOMENT FRAMES (SMF): WELDED UNREINFORCED FLANGE-WELDED WEB (WUF-W) MOMENT CONNECTION MEETING PREQUALIFICATION REQUIREMENTS PER AISC358
RESPONSE MODIFICATION COEFFICIENT, R	8
SYSTEM OVERSTRENGTH FACTOR, Ω0	3
DEFLECTION AMPLIFICATION FACTOR, Cd	5.5
SEISMIC RESPONSE COEFFICIENT, Cs	0.22
DESIGN BASE SHEAR, V	24kip
MAXIMUM STORY DRIFT AT DESIGN LATERAL FORCE RELATIVE TO RIGID BASE	1.5in

BOX CAR PAVILION - RISK CATEGORY, IMPORTANCE FACTOR AND SFRS CLASSIFICATION	VALUE
RISK CATEGORY	III
SEISMIC DESIGN CATEGORY	D
SEISMIC IMPORTANCE FACTOR, Ie	1.25
SEISMIC WEIGHT, w	192kips
ANALYSIS PROCEDURE	EQUIVALENT LATERAL FORCE PROCEDURE (ELF)
SEISMIC FORCE RESISTING SYSTEM (SFRS) PER ASCE 7	STEEL SPECIAL MOMENT FRAMES (SMF): WELDED UNREINFORCED FLANGE-WELDED WEB (WUF-W) MOMENT CONNECTION MEETING PREQUALIFICATION REQUIREMENTS PER AISC358
RESPONSE MODIFICATION COEFFICIENT, R	8
SYSTEM OVERSTRENGTH FACTOR, Ω0	3
DEFLECTION AMPLIFICATION FACTOR, Cd	5.5
SEISMIC RESPONSE COEFFICIENT, Cs	0.22
DESIGN BASE SHEAR, V	41kips
MAXIMUM STORY DRIFT AT DESIGN LATERAL FORCE RELATIVE TO RIGID BASE	3.0in

CANOPY - DESIGNED AS AN NON-STRUCTURAL ATTACHMENT PER ASCE7-16 SECTION 13.1.1	VALUE
COMPONENT (ASCE7-16 TABLE 13.5-1)	OTHER FLEXIBLE COMPONENT (LIMITED DEFORMABILITY ELEMENTS AND ATTACHMENTS)
COMPONENT IMPORTANCE FACTOR Ip	1.0
COMPONENT WEIGHT wp	141kips
COMPONENT AMPLIFICATION FACTOR ap	2.5
COMPONENT RESPONSE MODIFICATION FACTOR Rp	2.5
COMPONENT OVERSTRENGTH FACTOR FOR ANCHORAGE INTO CONCRETE, Ωp	2.5
SEISMIC DESIGN FORCE Fp	78kips
MAXIMUM DRIFT AT Fp RELATIVE TO RIGID BASE	2.50in

CODES AND STANDARDS

1. WHERE CODES AND STANDARDS ARE REFERENCED IN THE CONTRACT DOCUMENTS, THEY SHALL BE THE VERSIONS LISTED IN CHAPTER 35 OF 2019 CALIFORNIA BUILDING CODE (CBC).
2. ALL WORK SHALL CONFORM TO THE REQUIREMENTS OF THE 2019 CALIFORNIA BUILDING STANDARDS CODE (CBSC) CALIFORNIA CODE OF REGULATIONS, TITLE 24, INCLUDING PART 2, VOLUMES 1 AND 2 AS AMENDED BY THE 2020 LOS ANGELES AMENDMENTS TO THE CALIFORNIA BUILDING CODES.
3. CALIFORNIA EXISTING BUILDING CODE 2019
4. IN ADDITION, THE FOLLOWING CODES, STANDARDS AND SPECIFICATIONS SHALL APPLY WHERE MORE STRINGENT AND AS MODIFIED BY THE BUILDING CODE:
   - A. ACI 318-14: BUILDING CODE REQUIREMENTS FOR STRUCTURAL CONCRETE AND COMMENTARY.
   - B. AISC 303-16: CODE OF STANDARD PRACTICE FOR STRUCTURAL STEEL BUILDINGS AND BRIDGES.
   - C. ANSI/AISC 341-16: SEISMIC PROVISIONS FOR STRUCTURAL STEEL BUILDINGS.
   - D. ANSI/AISC 358-16 WITH ANSI/AISC 358S1-18: PREQUALIFIED CONNECTIONS FOR SPECIAL AND INTERMEDIATE STEEL MOMENT FRAMES FOR SEISMIC APPLICATIONS.
   - E. ANSI/AISC 360-16: SPECIFICATIONS FOR STRUCTURAL STEEL BUILDINGS.
   - F. AISI S100-2016: NORTH AMERICAN SPECIFICATION FOR THE DESIGN OF COLD-FORMED STEEL STRUCTURAL MEMBERS.
   - G. ASCE 7-16: MINIMUM DESIGN LOADS FOR BUILDINGS AND OTHER STRUCTURES.
   - H. AWS D1.1/D1.1M:2015: STRUCTURAL WELDING CODE-STEEL.
   - I. AWS D1.3/D1.3M:2018: STRUCTURAL WELDING CODE - SHEET STEEL.
   - J. AWS D1.4/D1.4M:2018: STRUCTURAL WELDING CODE - REINFORCING STEEL.
   - K. AWS D1.8/D1.8M:2016: STRUCTURAL WELDING CODE - SEISMIC SUPPLEMENT.
   - L. ACI 530-13: BUILDING CODE REQUIREMENTS FOR MASONRY STRUCTURES.
   - M. RCSC-2014: SPECIFICATION FOR STRUCTURAL JOINTS USING HIGH-STRENGTH BOLTS.
5. THE ASTM STANDARDS REFERRED TO IN THE DRAWINGS AND SPECIFICATIONS AND USED IN DESIGN ARE THOSE INCLUDED AS REFERENCED STANDARDS TO THE PROJECT GOVERNING CODE(S). WHERE AN ASTM STANDARD HAS SUBSEQUENTLY BEEN REVISED, CONSTRUCTION SHALL COMPLY WITH BOTH THE LATEST EDITION OF THAT STANDARD AND THE EDITION OF THAT STANDARD REFERENCED IN DESIGN. WHERE IT IS NOT POSSIBLE TO SATISFY THE REQUIREMENTS OF BOTH EDITIONS OF THE STANDARDS DUE TO A CONFLICT BETWEEN THEM, NOTIFY THE ARCHITECT AND ENGINEER BEFORE PROCEEDING.

GENERAL

1. ALL CONSTRUCTION SHALL BE IN ACCORDANCE WITH THE FOLLOWING:
   - A. PROJECT GOVERNING CODE(S) AND STANDARDS.
   - B. DRAWINGS.
   - C. SPECIFICATIONS.
2. THE STRUCTURAL DRAWINGS ARE INTENDED TO WORK WITH AND BE COMPLEMENTARY TO THE PROJECT SPECIFICATIONS. REFER TO THE SPECIFICATIONS FOR ADDITIONAL REQUIREMENTS.
3. IN THE EVENT THAT CERTAIN DETAILS OF THE CONSTRUCTION ARE NOT FULLY SHOWN OR NOTED ON DRAWINGS, THEIR CONSTRUCTION SHALL BE OF THE SAME TYPE AS FOR SIMILAR CONDITIONS THAT ARE SHOWN OR NOTED, SUBJECT TO THE STRUCTURAL ENGINEER'S APPROVAL.
4. THE PROJECT LOCATION AND ELEVATIONS ARE AS DEFINED IN THE SITE PLAN DRAWING G060 BY PSOMAS.
5. THE CONTRACTOR SHALL VERIFY ALL EXISTING CONDITIONS AND DIMENSIONS BEFORE COMMENCING WITH THE WORK AND NOTIFY THE ARCHITECT AND ENGINEER OF ANY DISCREPANCIES WITH THE INFORMATION SHOWN ON THE DRAWINGS.
6. THE CONTRACTOR SHALL USE STRUCTURAL DRAWINGS IN CONJUNCTION WITH ARCHITECTURAL, MECHANICAL, ELECTRICAL, PLUMBING, FIRE PROTECTION AND ALL OTHER RELEVANT CONSULTANT DRAWINGS.
7. SEE ARCHITECTURAL DRAWINGS FOR THE FOLLOWING:
   - A. SIZE AND LOCATION OF ALL DOOR AND WINDOW OPENINGS, EXCEPT AS NOTED.
   - B. SIZE AND LOCATION OF ALL INTERIOR AND EXTERIOR NON-BEARING PARTITIONS, FAÇADE, LOUVERS ETC., EXCEPT AS NOTED
   - C. SIZE AND LOCATION OF ALL CONCRETE CURBS, FLOOR DRAINS, SLOPES, DEPRESSED AREAS, CHANGE IN LEVEL, CHAMFERS, GROOVES, INSERTS, ETC., EXCEPT AS SHOWN.
   - D. SIZE AND LOCATION OF ALL FLOOR AND ROOF OPENINGS EXCEPT AS SHOWN.
   - E. FLOOR AND ROOF FINISHES.
   - F. EDGE OF SLAB LOCATIONS AROUND THE PERIMETER AND AT INTERIOR OPENINGS, EXCEPT AS SHOWN.
   - G. DIMENSIONS NOT SHOWN ON THE STRUCTURAL DRAWINGS.
   - H. STAIRS EXCEPT AS SHOWN.
   - I. FIREPROOFING.
   - J. WATERPROOFING.
   - K. MISCELLANEOUS STEEL REQUIRED FOR SUPPORT OF ARCHITECTURAL ELEMENTS.
   - L. ALL EXISTING ELEMENTS AND STRUCTURES.
8. SEE MECHANICAL, ELECTRICAL AND PLUMBING DRAWINGS FOR THE FOLLOWING:
   - A. PIPE RUNS, SLEEVES, HANGERS, TRENCHES EXCEPT AS SHOWN OR NOTED.
   - B. ELECTRICAL CONDUIT RUNS, BOXES, OUTLETS IN WALLS AND SLABS. CONDUITS SHALL NOT BE CAST IN CONCRETE MEMBERS UNLESS SPECIFICALLY INDICATED ON THE STRUCTURAL DRAWINGS.
   - C. CONCRETE INSERTS FOR ELECTRICAL, MECHANICAL, OR PLUMBING FIXTURES.
   - D. SIZE AND LOCATION OF EQUIPMENT PADS AND EQUIPMENT ANCHORAGE EXCEPT AS SHOWN OR NOTED.
   - E. ALL LIGHTNING PROTECTION AND/OR GROUND/EARTHING REQUIREMENTS INCLUDING ANY ASSOCIATED ITEMS EMBEDDED IN OR ATTACHED TO STRUCTURE.
   - F. VERIFY AND COORDINATE ALL OPENINGS, EQUIPMENT PADS, SLEEVES AND INSERTS WITH REVIEWED SUBMITTALS, AND NOTIFY THE STRUCTURAL ENGINEER USING HIGHLIGHTED DRAWINGS PRODUCED TO SCALE WHERE THESE DEVIATE IN SIZE OR LOCATION FROM THE STRUCTURAL DRAWINGS.
9. OPENINGS, POCKETS, ETC., LARGER THAN 6" SHALL NOT BE PLACED IN CONCRETE SLABS, DECKS, WALLS, UNLESS SPECIFICALLY DETAILED ON THE STRUCTURAL DRAWINGS. NOTIFY THE STRUCTURAL ENGINEER WHEN DRAWINGS BY OTHERS SHOW OPENINGS, POCKETS, ETC. LARGER THAN 6" WHICH ARE NOT SHOWN ON THE STRUCTURAL DRAWINGS BUT WHICH ARE LOCATED IN STRUCTURAL MEMBERS.
10. DEPRESSIONS IN SLABS SHALL NOT BE PLACED UNLESS SPECIFICALLY SHOWN ON THE STRUCTURAL DRAWINGS. NOTIFY THE STRUCTURAL ENGINEER WHEN DRAWINGS BY OTHERS SHOW DEPRESSIONS WHICH ARE NOT SHOWN ON THE STRUCTURAL DRAWINGS BUT WHICH ARE LOCATED IN STRUCTURAL SLABS.
11. ALL LOADS (MEP SYSTEMS, EQUIPMENT ETC.) SUPPORTED BY STRUCTURAL FLOOR DECKS OR FRAMING EXCEEDING 20 POUNDS SHALL BE REVIEWED BY THE STRUCTURAL ENGINEER PRIOR TO INSTALLATION UNLESS SPECIFICALLY DETAILED ON THE DRAWINGS. THE CONTRACTOR SHALL SUBMIT ONE COMPOSITE PLAN PER FLOOR LEVEL WHICH INCLUDES ALL POINT LOADS OF ALL TRADES. ALL LOADS EXCEEDING 20 POUNDS SHALL BE INCLUDED IN THOSE PLANS. ALONG WITH THE PLANS, THE CONTRACTOR SHALL SUBMIT THE LOADS IN AN EXCEL FILE LISTING THE FOLLOWING DATA FOR EACH INDIVIDUAL POINT:
    - A. COORDINATES OF THE LOAD RELATIVE TO PROJECT BASE POINT.
    - B. MAGNITUDE OF LOAD. UNITS SHALL BE LBF.
    - C. DIRECTION OF LOAD; HORIZONTAL OR VERTICAL.
    - D. LOAD CASE; SEISMIC OR GRAVITY.
    - E. CATEGORIZATION BY TRADE.
    - F. IDENTIFICATION OF THE STRUCTURAL MEMBER THE LOAD IS ACTING ON; SLAB OR BEAM.
12. THE INFORMATION SHOWN FOR NON-STRUCTURAL ELEMENTS/FINISHES IS GIVEN FOR REFERENCE ONLY. THE CONTRACTOR SHALL REFER TO ARCHITECTURAL DRAWINGS FOR THIS INFORMATION.
13. SCALES NOTED ON STRUCTURAL DRAWINGS ARE FOR REFERENCE ONLY. NO DIMENSIONAL INFORMATION SHALL BE OBTAINED BY SCALING FROM THE DRAWINGS. THE CONTRACTOR SHALL VERIFY DIMENSIONS NOT NOTED WITH THE ARCHITECT PRIOR TO PROCEEDING WITH WORK.
14. CLADDING/FAÇADE/STAIR CONNECTIONS TO THE STRUCTURE SHALL NOT INTRODUCE TORSION AND UNACCEPTABLE LOAD ECCENTRICITIES TO STRUCTURAL MEMBERS. SUCH CONDITIONS SHOULD BE BROUGHT TO THE ATTENTION OF THE STRUCTURAL ENGINEER WHO MAY REQUIRE ADDITIONAL BRACING TO BE PROVIDED BY THE CLADDING/FAÇADE CONTRACTOR AT NO ADDITIONAL COST TO THE CONTRACT.
15. THE STYROFOAM INDICATED ON DRAWINGS (FOR INSTANCE UNDER EQUIPMENT PADS) SHALL BE STYROFOAM HIGHLOAD 60 BY DOW CHEMICAL COMPANY OR EQUAL CONFORMING TO ASTM C578, TYPE VII, UNLESS NOTED OTHERWISE.

NOT FOR CONSTRUCTION

09.AUG.21

ba
belzberg architects
2321 MAIN STREET
SANTA MONICA, CA 90405
310.453.9611
www.belzbergarchitects.com

ARUP
Arup North America Ltd.
900 Wilshire Boulevard,
19th Floor
Los Angeles CA 90017
Tel: 310 578 4400
www.arup.com

#	DESCRIPTION	DATE

GENERAL NOTES

PROJECT NUMBER:

S001

8/10/2021 5:29:07 PM

METAL DECK

1. METAL DECK TYPES SHALL BE AS INDICATED IN THE METAL DECK SCHEDULE (SEE TYPICAL METAL DECK DETAILS) OR EQUAL. ALL METAL DECK TYPES SHALL HAVE A CURRENT IAPMO EVALUATION REPORT.
2. MATERIALS FOR METAL DECK AND ACCESSORIES SHALL BE GALVANIZED STEEL CONFORMING TO ASTM A653-SS WITH GRADE AS INDICATED IN THE METAL DECK SCHEDULE AND ZINC COATING CONFORMING TO ASTM A653, G60 UNLESS NOTED OTHERWISE. FOR ANY DECK EXPOSED TO THE OUTSIDE IN FINAL CONSTRUCTION CONDITION, ZINC COATING SHALL CONFORM TO ASTM A653, GR90.
3. METAL DECK ACCESSORIES SHALL BE THE SAME GAGE AS DECKING UNLESS NOTED OTHERWISE.
4. WELDING SHALL BE PER AWS D1.3 AND PERFORMED BY AWS CERTIFIED WELDERS.
5. DECK UNITS, WHETHER PARALLEL OR PERPENDICULAR TO SUPPORTS, SHALL BEAR A MINIMUM OF 2 INCHES ON SUPPORTING MEMBERS.
6. DECK UNITS SHALL BE CONTINUOUS OVER THREE OR MORE SPANS, EXCEPT WHERE THE FRAMING DOES NOT PERMIT.
7. THE DESIGN INTENT IS FOR THE DECK TO BE UN-SHORED. HOWEVER, SHORING MAY BE REQUIRED AT NON-CONTINUOUS SPANS. THE CONTRACTOR SHALL CHECK ALL DECK CONDITIONS TO DETERMINE IF SHORING IS REQUIRED OR NOT. WHERE SHORING IS REQUIRED, INCLUDING SLAB EDGE CONDITIONS, THE SHORING SHALL REMAIN IN PLACE UNTIL THE CONCRETE FILL REACHES AT LEAST 75% OF THE DESIGN COMPRESSIVE STRENGTH. THE CONTRACTOR, AT HIS OPTION AND EXPENSE, MAY PROVIDE A HEAVIER GAGE OF METAL DECK ADEQUATE FOR UN-SHORED CONSTRUCTION. SHORING, WHERE REQUIRED, SHALL BE CLEARLY INDICATED ON THE SHOP DRAWINGS.
8. ATTACHMENT OF DECK UNITS SHALL BE AS INDICATED IN THE METAL DECK SCHEDULE.
9. THE CONTRACTOR SHALL DESIGN AND PROVIDE EDGE FORMS, FLASHING AND CLOSURE PLATES AT ENDS OF ALL UNITS, AROUND COLUMNS AND AT ALL PERIMETER LOCATIONS REQUIRING CLOSURE FOR CONCRETE. COORDINATE ALL CLOSURES WITH ELEVATOR, STAIR AND OTHER ARCHITECTURAL DETAILS. COMPOSITE DECK INSTALLATION, WHEN COMPLETE, SHALL BE READY TO RECEIVE CONCRETE FILL AS SHOWN ON THE DRAWINGS WITHOUT LEAKING.
10. NO CONDUITS SHALL BE EMBEDDED IN THE CONCRETE FILL.
11. CONCRETE FILL ON METAL DECK SHALL NOT BE PLACED UNTIL COLUMN BASE PLATES HAVE BEEN GROUTED.
12. CONCRETE FOR TOPPING SLABS SHALL NOT BE PLACED UNTIL CONCRETE FILL ON METAL DECK REQUIRED FOR COMPOSITE ACTION HAS REACHED FULL 28-DAY COMPRESSIVE STRENGTH.
13. CONCRETE FILL THICKNESSES OVER METAL DECK SHOWN ON FRAMING PLANS ARE THE NOMINAL THICKNESSES REQUIRED. THE CONTRACTOR SHALL MEET THESE THICKNESSES AND IN ADDITION MEET THE FLATNESS AND LEVELNESS REQUIREMENTS PER 033000. IF ADDITIONAL CONCRTE THICKNESS IS RQUIRED, THE CONTRACTOR SHALL NOT EXCEED THE OVERPOUR ALLOWANCE PROVIDED IN THE RESPECTIVE LOADING PLANS. HORIZONTAL COLD JOINTS IN SLAB ON METAL DECK SLABS ARE NOT PERMITTED.

SHEAR STUDS AND DEFORMED BAR ANCHORS

1. ALL HEADED SHEAR STUDS SHALL BE "TYPE B" PER AWS D1.1 TABLE 7.1 AND CONFORMING TO ASTM A108.
2. WELDED DEFORMED BAR ANCHORS (DBA) SHALL BE NELSON D2L OR EQUAL CONFORMING TO ASTM A496 WITH A MINIMUM YIELD STRENGTH OF 70 KSI.
3. STUDS AND DEFORMED BAR ANCHORS SHALL BE AUTOMATICALLY END WELDED IN ACCORDANCE WITH THE MANUFACTURER'S RECOMMENDATIONS IN SUCH A MANNER AS TO PROVIDE COMPLETE FUSION BETWEEN THE END OF THE STUD AND THE STRUCTURAL MEMBER. THERE SHOULD BE NO POROSITY OR EVIDENCE OF LACK OF FUSION BETWEEN THE WELDED END OF THE STUD OR DBA AND THE STRUCTURAL MEMBER. WELDING SHALL BE DONE ONLY BY QUALIFIED WELDERS APPROVED BY THE WELDING INSPECTOR.
4. STUD AND DBA LENGTHS INDICATED ON THE DRAWINGS ARE LENGTHS AFTER WELDING.
5. THE TYPE AND CAPACITY OF THE WELDING EQUIPMENT SHALL BE IN ACCORDANCE WITH THE MANUFACTURER'S RECOMMENDATIONS AND SHALL BE CHECKED BY THE INDEPENDENT TESTING AGENCY.
6. AT THE BEGINNING OF EACH DAY'S WORK, A MINIMUM OF TWO TEST SHEAR STUD WELDS SHALL BE MADE (WITH THE EQUIPMENT TO BE USED) TO METAL WHICH IS THE SAME AS THE ACTUAL WORK PIECE. THE TEST STUDS SHALL BE SUBJECTED TO A 90° BEND TEST BY STRIKING THEM WITH A HEAVY HAMMER. AFTER THE ABOVE TEST, THE WELD SECTION SHALL NOT EXHIBIT ANY TEARING OUT OR CRACKING.

STRUCTURAL STEEL WELDING

1. ALL WELDING SHALL BE DONE BY AWS CERTIFIED WELDERS.
2. SHOP DRAWINGS SHALL SHOW ALL WELDING WITH AWS A2.4 SYMBOLS.
3. WELDS SHALL BE MADE USING LOW-HYDROGEN ELECTRODES WITH MINIMUM TENSILE STRENGTH OF 70 KSI (E70XX ELECTRODES) UNLESS NOTED OTHERWISE. USE LOW-HYDROGEN ELECTRODES WITH MINIMUM TENSILE STRENGTH OF 80 KSI (E80XX ELECTRODES) FOR WELDING OF ASTM A913 GRADE 65 STEEL, ASTM A572 GRADE 65 STEEL & ASTM A1066 GRADE 65 STEEL. WHEN WELDING HIGHER GRADE STEEL TO LOWER GRADE STEEL, FILLER METAL WITH A "MATCHING" RELATIONSHIP TO BASE METAL AS DEFINED IN AWS D1.1 SHALL BE USED UNLESS NOTED OTHERWISE.
4. WELD LENGTHS CALLED FOR ON DRAWINGS ARE THE NET EFFECTIVE LENGTH REQUIRED. WHERE LENGTH OF WELD IS NOT SHOWN IT SHALL BE THE FULL LENGTH OF JOINT.
5. ALL WELDS SHALL MEET AWS D1.1 IN ADDITION:
   A. WELDS CLASSIFIED ON DRAWINGS AS D1.8 WELDS SHALL MEET THE FILLER REQUIREMENTS PER AWS D1.8 SECTION 6.3 FOR NON-DEMAND CRITICAL WELDS.
   B. WELDS CLASSIFIED AS DCW SHALL MEET FILLER REQUIREMENTS PER AWS D1.8 SECTION 6.3 FOR DEMAND CRITICAL WELDS.
   C. WELDS IN DETAILS CLASSIFIED AS SFRS SHALL BE PER AWS D1.8 SECTION 6.3 UNLESS NOTED OTHERWISE. BEAM TO COLUMN WELDS IN DETAILS CLASSIFIED AS SFRS SHALL BE DEMAND CRITICAL WELDS
6. DEMAND CRITICAL WELDS SHALL BE PROVIDED AT LOCATIONS INDICATED ON THE DRAWINGS
7. ALL GROOVE AND BUTT WELDS SHALL BE COMPLETE JOINT PENETRATION (CJP) WELDS UNLESS NOTED OTHERWISE.
8. ALL PARTIAL PENETRATION GROOVE WELD SIZES SHOWN ON THE DRAWINGS REFER TO THE EFFECTIVE THROAT THICKNESS.
9. FILLET WELD SIZES SHOWN ON DRAWINGS ARE MINIMUM SIZES. INCREASE WELD SIZE TO AWS MINIMUM SIZES BASED ON PLATE THICKNESSES. THE MINIMUM FILLET WELD SIZE SHALL BE 3/16".
10. PROJECT SPECIFIC WELDING PROCEDURE SPECIFICATION (WPS) FOR ALL SHOP AND FIELD WELDS ON THE PROJECT SHALL BE SUBMITTED FOR REVIEW AND ACCEPTANCE PRIOR TO STARTING FABRICATION OR ERECTION. THE WPS SHALL BE SUBMITTED TO OWNER'S TESTING LAB FOR REVIEW AND ACCEPTANCE PRIOR TO BEING SUBMITTED TO THE ARCHITECT.
11. THE CONTRACTOR IS RESPONSIBLE FOR SEQUENCING AND PROCEDURES OF WELDING TO MINIMIZE THE EFFECTS OF WELD SHRINKAGE AND TO MAINTAIN ERECTION TOLERANCES.
12. ALL STEEL EXPOSED TO WEATHER SHALL HAVE ADDITIONAL SEAL WELDING TO PROTECT THE MEMBERS (PIPES, TUBES, BUILT-UPS) AND THE CONNECTIONS FROM MOISTURE INFILTRATION. THESE ADDITIONAL SEAL WELDS SHALL BE SHOWN ON SHOP DRAWINGS.
13. WELDS SHOWN ON DRAWINGS MAY BE SHOP OR FIELD WELDS AT CONTRACTOR'S OPTION, UNLESS NOTED OTHERWISE.
14. WELD ACCESS HOLES SHALL BE PER AWS D1.1/D1.1M AND/OR AISC 360, UNLESS NOTED OTHERWISE.
15. ALL WELD TABS ON SFRS ELEMENTS SHALL BE IN ACCORDANCE WITH AWS D1.8/D1.8M CLAUSE 6.11. ALL WELD TABS ON NON-SFRS ELEMENTS SHALL BE IN ACCORDANCE WITH AWS D1.1/D1.1M CLAUSE 5.31.
16. ALL WELD TABS SHALL BE REMOVED FOLLOWING AWS D1.8/D1.8M CLAUSE 6.11.
17. WELD BACKING SHALL REMAIN IN PLACE UNLESS DEFINED OTHERWISE IN THE DETAILS OF THESE DRAWINGS.
18. REMOVAL OF WELD BACKING SHALL BE PER AWS D1.8/D1.8M CLAUSE 6.7 AND 6.8.
19. LEFT-IN-PLACE WELD BACKING ON SFRS ELEMENTS SHALL COMPLY WITH AWS D1.8/D1.8M CLAUSE 6.9. FURTHER INFORMATION IS PROVIDED IN THE DETAILS OF THESE DRAWINGS
20. AT THE CANOPY MAIN STEEL STRUCTURE THE CONTRACTOR SHALL:
   A. REMOVE ALL ERECTION AIDS AFTER COMPLETING WORK, GRIND SMOOTH THE CONNECTION POINTS AND REINSTATE THE CORROSION PROTECTION OR COATING.
   B. REMOVE ALL RUN OFF TABS AND GRIND SMOOTH.
   C. REMOVE EXPOSED AND VISIBLE BACKING BARS, BACKGOUGE, REWELD AND GRIND SMOOTH.

STRUCTURAL STEEL

1. STRUCTURAL STEEL MEMBERS SHALL CONFORM TO THE FOLLOWING UNLESS NOTED OTHERWISE:

SHAPE	GRADE	YIELD STRENGTH Fy (KSI)
WIDE FLANGE SHAPES, UNO	ASTM A992	50
TEES	ASTM A992	50
CHANNELS	ASTM A36	36
ANGLES	ASTM A36	36
PLATES	ASTM A572 GRADE 50	50
BARS	ASTM A572 GRADE 50	50
SQUARE & RECTANGULAR HSS	ASTM A500 GRADE C	50
ROUND HSS	ASTM A500 GRADE C	46
STEEL PIPE	ASTM A53 GRADE B	35

2. HIGH-STRENGTH BOLTS SHALL CONFORM TO THE FOLLOWING UNLESS NOTED OTHERWISE:

BOLT TYPE	REMARKS
ASTM A325	WHERE NOTED ON DRAWINGS
ASTM A490	WHERE NOTED ON DRAWINGS
ASTM A307 GRADE A	MACHINE BOLTS WHERE NOTED ON DRAWINGS

3. ANCHOR RODS SHALL BE ASTM F1554 GRADE 55 OR GRADE 105 AS NOTED ON DRAWINGS
4. WHERE NON-SLIP CRITICAL BOLTS ARE SPECIFIED THEY SHALL BE TIGHTENED TO A SNUG TIGHT CONDITION. FULLY PRETENSIONED BOLTS ARE ACCEPTABLE IN LIEU OF SNUG-TIGHT BOLTS. BOLTS IN CONNECTIONS OF ALL BEAMS AND GIRDERS TO COLUMNS SHALL BE FULLY PRETENSIONED UNLESS NOTED OTHERWISE. SEE DETAILS AND SCHEDULES FOR BOLT DIAMETERS AND TYPE.
5. FULLY PRETENSIONED OR SLIP-CRITICAL BOLTS AS SPECIFIED ON THE DRAWINGS OR IN THE GENERAL NOTES SHALL BE INSTALLED USING TWIST-OFF TYPE TORQUE CONTROL BOLTS, DIRECT TENSION INDICATORS OR TURN-OF-NUT METHOD. A COMBINATION OF THOSE METHODS IS NOT REQUIRED FOR PRETENSIONED BOLTS.
6. ALL BOLTS SPECIFIED AS SLIP CRITICAL BOLTS (A325-SC OR A490-SC) SHALL HAVE CLASS A FAYING SURFACES UNLESS NOTED OTHERWISE. ALL FILLERS AND SHIMS OF ONE BOLTED JOINT SHALL HAVE THE SAME FAYING SURFACE PREPARATION AS SPECIFIED FOR THIS SPECIFIC CONNECTION. ACCORDINGLY, SHIMS SHALL MATCH THE SURFACE PREPARATION OF THE CONNECTING PARTS.
7. ALL BOLT HOLES SHALL BE STANDARD SIZE HOLES PER AISC 360 TABLE J3.3 UNLESS NOTED OTHERWISE.
8. THE CONTRACTOR SHALL BE RESPONSIBLE FOR THE FOLLOWING:
   A. ALL ERECTION AIDS.
   B. STEELWORK ERECTION SEQUENCE. IN DETERMINING THE ERECTION SEQUENCE THE CONTRACTOR SHALL TAKE NECESSARY MEASURES TO MINIMIZE THE EFFECTS OF TEMPERATURE CHANGES AND DIFFERENTIAL TEMPERATURE EFFECTS (SUCH AS EXPOSURE TO STRONG SUN ON ONE SIDE OF THE BUILDING) WHILE MEETING AISC ACCEPTABLE ERECTION TOLERANCES.
9. THE CONTRACTOR SHALL SUBMIT DETAILED, COORDINATED AND CHECKED 2D FABRICATION DRAWINGS FOR ALL STRUCTURAL STEEL MEMBERS AND CONNECTIONS TO THE ARCHITECT FOR REVIEW PRIOR TO THE START OF FABRICATION AND ERECTION.
10. STRUCTURAL AND ARCHITECTURAL STEEL PERMANENTLY EXPOSED TO WEATHER SHALL BE CORROSION PROTECTED BY BEING HOT-DIPPED GALVANIZED AND/OR SUITABLY PRIMED AND PAINTED AS SHOWN ON ARCHITECTURAL DRAWINGS AND PER PROJECT SPECIFICATIONS. STEEL ELEMENTS EMBEDDED IN CONCRETE OR MASONRY SHALL BE LEFT UNPAINTED.
11. THE CONTRACTOR SHALL PROVIDE MINIMUM 4" CONCRETE COVER AROUND ALL STEEL MEMBERS OR COMPONENTS ADJACENT TO AND EXPOSED TO SOIL. MINIMUM REINFORCEMENT IN COVER CONCRETE SHALL BE #3 AT 12" ON CENTERS EACH WAY.
12. ALL STEEL MEMBERS FRAMING INTO CONCRETE WALLS/COLUMNS/BEAMS SHALL BE DETAILED TO SUIT CONCRETE FIELD TOLERANCES. COORDINATE WITH CONCRETE CONTRACTOR AND/OR CONDUCT FIELD SURVEYS AS NECESSARY PRIOR TO STEEL FABRICATION.
13. CUTTING AND DRILLING OF STRUCTURAL STEEL MEMBERS IN THE FIELD IS NOT PERMITTED.
14. NO OPENINGS AND/OR PENETRATIONS SHALL BE PLACED IN STEEL MEMBERS UNLESS SPECIFICALLY SHOWN AND DETAILED ON THE STRUCTURAL DRAWINGS.
15. ALL STEEL MEMBERS RELATED TO ELEVATORS SHALL BE COORDINATED WITH THE ELEVATOR CONTRACTOR PRIOR TO FABRICATION.
16. SEE ARCHITECTURAL DRAWINGS FOR LOCATIONS OF ALL ARCHITECTURALLY EXPOSED STRUCTURAL STEEL (AESS). FABRICATION, WELDING AND ERECTION OF AESS SHALL COMPLY WITH THE LATEST EDITION OF AISC CODE OF STANDARD PRACTICE FOR STEEL BUILDINGS AND BRIDGES.
17. FOLLOW PROVISIONS IN THE REFERENCED AWS STANDARDS FOR STATICALLY LOADED STRUCTURES WITH EXCEPTIONS AS NOTED IN THESE GENERAL NOTES, AISC 360 AND AISC 341.

FOUNDATIONS

1. THE FOUNDATION DESIGN IS BASED ON THE "GEOTECHNICAL RECOMMENDATIONS REPORT PROPOSED LOS ANGELES HOLOCAUST MUSEUM ADDITION", DATED JULY 6, 2021 BY GROUP DELTA.
2. UNDOCUMENTED FILL SHALL BE REMOVED AND REPLACED, WHERE REQUIRED PER THE GEOTECHNICAL REPORT, WITH ENGINEERED COMPACTED FILL MEETING THE REQUIREMENTS OF THE GEOTECHNICAL REPORT.
3. REFER TO THE GEOTECHNICAL REPORT FOR THE LIQUIFACTION RISK AND THE RESULTING DESIGN REQUIREMENTS IN THE PERMANENT AND TEMPORARY CONDITION.
4. REFER TO THE GEOTECHNICAL REPORT FOR THE FOUNDATION AND RETAINING WALL DESIGN PARAMETERS.
5. REFER TO THE GEOTECHNICAL REPORT FOR INFORMATION ON GENERAL SUBSURFACE PROFILES, SOIL PROPERTIES, EXISTING SITE FEATURES AND ALL OTHER CONDITIONS AFFECTING FOUNDATION INSTALLATION.
6. REFER TO THE GEOTECHNICAL REPORT FOR REQUIREMENTS FOR EXCAVATIONS, GRADING, COMPACTION AND BACKFILLING BEHIND WALLS RETAINING EARTH.
7. BACKFILLING AGAINST RETAINING/BASEMENT WALLS WHERE THERE IS GRADE ON BOTH SIDES OF THE WALL SHALL BE CARRIED OUT IN SUCH A MANNER THAT THE DIFFERENCE IN SOIL LEVEL IS NEVER MORE THAN 3.0 FEET. DO NOT PLACE BACKFILL BEHIND WALLS RETAINING EARTH BEFORE CONCRETE HAS ATTAINED FULL DESIGN STRENGTH UNLESS TEMPORARY BRACING IS PROVIDED.
8. BACKFILL SHALL NOT BE PLACED AGAINST WALLS RETAINING EARTH (OTHER THAN CANTILEVER WALLS) UNTIL THE ATTACHING FLOORS/SLABS (AT TOP AND BOTTOM OF THE WALL) ARE COMPLETELY IN PLACE AND HAVE ATTAINED FULL DESIGN STRENGTH.
9. NEW FOOTINGS WHICH ARE LOCATED IMMEDIATELY ADJACENT TO EXISTING FOOTINGS SHALL BE FOUNDED AT THE SAME ELEVATION AS THE EXISTING FOOTINGS UNLESS NOTED OTHERWISE. EXISTING ADJACENT FOOTINGS SHALL NOT BE UNDERMINED BY EXCAVATION OR NEW CONSTRUCTION.
10. WATER SHALL NOT BE ALLOWED TO STAND IN TRENCHES BEFORE OR AFTER CONCRETE IS PLACED. IF TRENCHES BECOME SOFTENED DUE TO RAIN OR OTHER WATER BEFORE THE FOOTINGS ARE CAST, THE GEOTECHNICAL ENGINEER SHALL REVIEW THE CONDITIONS AND PROVIDE THE NECESSARY MITIGATION REQUIREMENTS TO THE CONTRACTOR.
11. ALL EXCAVATIONS, COMPACTIONS AND BACKFILLING SHALL BE INSPECTED AND APPROVED BY THE GEOTECHNICAL ENGINEER BEFORE PLACEMENT OF CONCRETE.
12. REFER TO PLUMBING AND/OR CIVIL DRAWINGS FOR UNDER-FLOOR AND PERIMETER WALL DRAINAGE SYSTEMS AND SPECIAL GRANULAR FILL MATERIALS FOR SUCH DRAINAGE.

REINFORCING STEEL FOR CONCRETE

1. STEEL REINFORCEMENT BARS SHALL BE AS FOLLOWS:
   A. DEFORMED BARS CONFORMING TO ASTM A615 GRADE 60 UNO.
   B. DEFORMED BARS CONFORMING TO ASTM A706 GRADE 60 AS STATED ON THE DRAWINGS.
   C. DEFORMED BARS CONFORMING TO ASTM A970 FOR HEADED BARS.
   D. ASTM A1064 FOR WELDED WIRE REINFORCEMENT (WELDED WIRE FABRIC, DEFORMED). USE FLAT SHEETS ONLY.
   E. HEADED STUDS AND HEADED STUD ASSEMBLIES FOR SHEAR REINFORCEMENT OF CONCRETE CONFIRMING TO ASTM A1044.
2. MECHANICAL SPLICES SHALL BE TYPE 2 COUPLERS (UNO) WITH A CURRENT ICC APPROVAL.
3. MINIMUM LAP OF WELDED WIRE REINFORCEMENT SHALL BE 6" OR ONE FULL MESH PLUS 2", WHICHEVER IS GREATER.
4. REINFORCING BARS SHALL BE LAP SPLICED PER THE LAP SPLICE LENGTH SCHEDULE. LAP SPLICES SHALL BE SECURELY TIED AT ALL SIDE AND END LAPS.
5. REINFORCING BARS MARKED AS "CONTINUOUS" SHALL BE LAP SPLICED PER LAP SPLICE LENGTH SCHEDULE.
6. REINFORCING BAR SPLICES SHALL BE MADE ONLY WHERE INDICATED ON THE DRAWINGS. WHERE SPLICE LOCATIONS ARE NOT SHOWN ON THE DRAWINGS, THE CONTRACTOR SHALL SHOW THEIR PROPOSED SPLICE LOCATIONS ON THE SHOP DRAWINGS.
7. ALL BARS AT NON-CONTINUOUS ENDS SHALL HAVE A STANDARD HOOK.
8. WELDING OF REINFORCING STEEL BARS SHALL BE IN ACCORDANCE WITH AWS D1.4. WELD REINFORCING BARS ONLY WHERE INDICATED ON THE DRAWINGS. TACK WELDING OR WELDING OF BARS TO PLATES, TEMPLATES, ETC. IS PROHIBITED, UNLESS SPECIFICALLY SHOWN ON THE STRUCTURAL DRAWINGS.
9. DOWELS CONNECTING WALLS OR COLUMNS TO FOUNDATIONS SHALL BE THE SAME GRADE, SIZE AND SPACING AS THE VERTICAL REINFORCING BARS IN THE WALLS OR COLUMNS, UNLESS NOTED OTHERWISE.
10. ALL DOWELS SHALL BE FULLY DEVELOPED IN TENSION UNLESS NOTED OTHERWISE.
11. ADDITIONAL REINFORCEMENTS SHALL BE PROVIDED AROUND ALL SLAB AND WALL OPENINGS AS SHOWN ON THE TYPICAL DETAILS UNLESS NOTED OTHERWISE.
12. WHERE VERTICAL DOWELS FROM FOUNDATION INTERFERE WITH STEEL COLUMN BASE PLATE, THE CONTRACTOR SHALL RELOCATE THESE DOWELS THREE (3) INCHES FROM EDGE OF BASE PLATE.
13. ALL WALLS SHALL BE INTERCONNECTED AT CORNERS AND INTERSECTIONS WITH DOWELS MATCHING HORIZONTAL REINFORCEMENT PER TYPICAL DETAILS UNLESS NOTED OTHERWISE.
14. ALL FOUNDATIONS AND GRADE BEAM REINFORCEMENT SHALL BE CONTINUOUS THROUGH INTERSECTING FOUNDATIONS AND GRADE BEAMS UNLESS NOTED OTHERWISE.
15. BARS SHALL NOT BE BENT OR TWISTED IN THE FIELD, UNLESS SPECIFICALLY DETAILED ON THE STRUCTURAL DRAWINGS.
16. ALL REINFORCING BARS, INSERTS, EMBEDS ETC. SHALL BE SECURELY HELD IN PLACE TO MAINTAIN THEIR POSITIONS WHILE CONCRETE IS POURED. PROVIDE SUITABLE CHAIRS, TIES, SPACERS, ADDITIONAL BARS AND STIRRUPS AS REQUIRED.

STRUCTURAL QUANTITIES

1. FOR COST ESTIMATING PURPOSES THE CONTRACTOR MAY USE THE FOLLOWING APPROXIMATE REINFORCEMENT RATES ON THE GROSS CONCRETE VOLUME OR SURFACE OF THESE RESPECTIVE ELEMENTS. THESE ESTIMATES INCLUDE AN ALLOWANCE FOR HOOKS, STIRRUPS, DEVELOPMENT LENGTHS AND LAP SPLICES. THESE ESTIMATES DO NOT INCLUDE TRIM REINFORCEMENT AROUND OPENINGS, WASTAGE, ADDITIONAL REINFORCEMENT NEEDED FOR SUPPORT DURING CONCRETING CONSTRUCTION ETC. THE CONTRACTOR SHALL CARRY AN ALLOWANCE FOR ADDITIONAL REINFORCEMENT TO ACCOUNT FOR THESE REQUIREMENTS PLUS ANY EXPECTED WASTAGE.

ELEMENT	REINFORCEMENT RATE
SLABS	
LEARNING CENTER ENTRANCE SUSPENDED REINFORCED CONCRETE SLAB 12in THICK	11 PSF
LEARNING CENTER AND ENTRY PAVILION SLAB ON GRADE 6in THICK	2.5PSF
LEARNING CENTER ROOF SLAB ON METAL DECK	3PSF
ENTRY PAVILION ROOF SLAB ON METAL DECK	3PSF
BOX CAR PAVILION ROOF SLAB ON METAL DECK	3PSF
STRUCTURAL SUBGRADE ELEMENTS	
PILASTERS	540 PCY
GRADE BEAMS	550 PCY
TIE BEAMS	330 PCY
RETAINING WALLS 12" THICK	200 PCY
STUB WALLS 18" THICK	200 PCY

2. FOR STEEL TONNAGE ESTIMATING PURPOSES, THE CONTRACTOR SHALL CARRY THE LARGER STEEL TONNAGE OF A) SD ESTIMATE AND B) THE DD DRAWINGS AND/OR DD REVIT MODEL TONNAGE. THE CONTRACTOR SHALL VERIFY MEMBER COUNTS, POTENTIAL SPLICES WITH THE STRUCTURAL ENGINEER IN CASE THEY IMPACT PRICING. THE MEMBER COUNT IN THE DRAWINGS / REVIT MODEL SHALL NOT BE USED AT THIS STAGE FOR ESTIMATING PURPOSES.
3. WE RECOMMEND THE CONTRACTOR USES A 15% CONNECTION GROSSING PERCENTAGE FACTOR TO ESTIMATE THE ADDITIONAL STEEL WEIGHT FOR CONNECTIONS. CONNECTION GROSSING PERCENTAGE FACTOR IS A GROSSING FACTOR ON CENTERLINE MEMBER WEIGHT TO FACILITATE ESTIMATING THE EXPECTED STEEL TONNAGE OF THE PROJECT.

   THE CONNECTION PERCENTAGE FACTOR IS NOT AN ESTIMATE OF FINAL CONNECTION MATERIAL (I.E. PLATES, BOLTS, ETC). THE CONNECTION PERCENTAGE FACTOR DOES NOT INCLUDE THE WEIGHT OF WELDS OR BOLTS. THE CONNECTION PERCENTAGE FACTOR DOES NOT ACCOUNT FOR ANY MATERIAL DROP OR INEFFICIENCIES IN SHAPE NESTING DURING CUTTING OPERATIONS. THE CONTRACTOR SHALL MAKE APPROPRIATE ALLOWANCES FOR THESE ELEMENTS.

   TOTAL STEEL WEIGHTS INCLUDING CONNECTIONS SHOULD BE VERIFIED BY A COST ESTIMATOR OR STEEL FABRICATOR.
4. THE CONTRACTOR SHALL CARRY SEPARATE ALLOWANCES FOR MISCELLENOUS STEEL SUCH AS INTERIOR BENT PLATES, TRIM FRAMING REQUIRED AT THE OPENINGS, OFFSET DECK SUPPORT DAVIT OR WINDOW WASHING SUPPORT, OR ADDITIONAL SUPPORT BEAMS FOR LOCALIZED MEP OR OTHER EQUIPMENT.
5. WE RECOMMEND THAT THE CONTRACTOR CONTINUES TO CARRY A DESIGN CONTINGENCY AS INDICATED AT 100% CD.

NOT FOR CONSTRUCTION

09.AUG.21

belzberg architects
2321 MAIN STREET
SANTA MONICA, CA 90405
310.453.9611
www.belzbergarchitects.com

ARUP
Arup North America Ltd.
900 Wilshire Boulevard,
19th Floor
Los Angeles CA 90017
Tel: 310 578 4400
www.arup.com

#	DESCRIPTION	DATE

GENERAL NOTES

PROJECT NUMBER:

S002

8/10/2021 5:23:08 PM

ABBREVIATIONS

#	REINFORCING BAR SIZE, SHEET METAL SCREW SIZE, TIMBER SCREW SIZE
(E)	EXISTING
(N)	NEW
@	AT (SPACING)
A	
ADDL	ADDITIONAL
AESS	ARCHITECTURALLY EXPOSED STRUCTURAL STEEL
AHJ	AUTHORITY HAVING JURISDICTION
AOR	ARCHITECT OF RECORD
APPROX	APPROXIMATE
AR	ANCHOR ROD
ARCH	ARCHITECT, ARCHITECTURAL
B	
B	BOTTOM REINFORCING BARS
BB	BOTTOM REINFORCING BARS - BOTTOM (OUTER) LAYER
BF	BRACED FRAME
BLDG	BUILDING
BOS	BOTTOM OF STEEL
BOTT	BOTTOM
BPL	BASE PLATE
BT	BOTTOM REINFORCING BARS - TOP (INNER) LAYER
BU	BUILT UP BEAM
BRBF	BUCKLING RESTRAINED BRACED FRAME
C	
C	AMERICAN STANDARD CHANNEL
CA	COLUMN ABOVE
CB	COLUMN BELOW
CIP	CAST IN PLACE CONCRETE
CJ	CONSTRUCTION JOINT
CJP	COMPLETE JOINT PENETRATION WELD
CL	CENTERLINE
CLR	CLEAR
CMU	CONCRETE MASONRY UNITS
COL	COLUMN
CONC	CONCRETE
CONN	CONNECTION, CONNECT
CONT	CONTINUE, CONTINUOUS
CPL	COVER PLATE
D	
db	REINFORCING BAR DIAMETER
DBA	DEFORMED BAR ANCHOR
DBL	DOUBLE
DCW	DEMAND CRITICAL WELD
DEG	DEGREE
DET	DETAIL
DIA	DIAMETER
DIM	DIMENSION
DL	DEAD LOAD
DN	DOWN
DO	DITTO
DP	DEEP
DSA	DIVISION OF STATE ARCHITECT
DWG	DRAWING
E	
(E)	EXISITING
EA	EACH
EF	EACH FACE
EJ	EXPANSION JOINT
EL	ELEVATION
ELEV	ELEVATOR
EMBED	EMBEDMENT, EMBEDDED
EOR	ENGINEER OF RECORD
EQ	EQUAL
EW	EACH WAY
EXP	EXPANSION
F	
FDN	FOUNDATION
FIN	FINISH
FLG	FLANGE
FLR	FLOOR
FS	FAR SIDE
FTG	FOOTING
Fy	YIELD STRESS
G	
GA	GAGE, GAUGE
GALV	GALVANIZED
GB	GRADE BEAM
GL	GRID LINE
GR	GRADE
H	
H	HEIGHT
HA	HANGER ABOVE
HB	HANGER BELOW
HGR	HANGER
HORIZ	HORIZONTAL
HSS	SQUARE, RECTANGULAR OR ROUND HOLLOW STRUCTURAL STEEL SECTION
I	
ID	INSIDE DIAMETER
IF	INSIDE FACE
K	
KB	KICKER BELOW
L	
L	LENGTH, STEEL ANGLE
LADBS	LOS ANGELES DEPARTMENT OF BUILDING AND SAFETY
LACDPW	LOS ANGELES COUNTY DEPARTMENT OF PUBLIC WORKS
Ld	DEVELOPMENT LENGTH
Ldc	REINFORCING BAR COMPRESSION DEVELOPMENT LENGTH
Ldh	HOOKED REINFORCING BAR DEVELOPMENT LENGTH
LL	LIVE LOAD
LLBB	LONG LEG BACK TO BACK
LLH	LONG LEG HORIZONTAL
LLV	LONG LEG VERTICAL
LSL	LONG SLOTTED HOLE IN STEEL CONSTRUCTION
LTA	REINFORCING BAR LAP SPLICE TYPE A
LTB	REINFORCING BAR LAP SPLICE TYPE B
LWC	LIGHT WEIGHT CONCRETE
M	
MAX	MAXIMUM
MC	MISCELLANEOUS CHANNEL
MECH	MECHANICAL
MEP	MECHANICAL, ELECTRICAL & PLUMBING
MF	MOMENT FRAME
MIN	MINIMUM
MISC	MISCELLANEOUS
MJ	MOVEMENT JOINT
MT	MAGNETIC PARTICLE TESTING
N	
(N)	NEW
NDT	NONDESTRUCTIVE TESTING METHOD
NIC	NOT IN CONTRACT
NO	NUMBER
NOM	NOMINAL
NS	NEAR SIDE
NTS	NOT TO SCALE
NWC	NORMAL WEIGHT CONCRETE
O	
OC	ON CENTER
OD	OUTSIDE DIAMETER
OH	OPPOSITE HANDED
OPNG	OPENING
OPP	OPPOSITE
OVH	OVERSIZED HOLE
P	
PAF	POWDER ACTUATED FASTENER
PC	PILE CAP
PCF	POUNDS PER CUBIC FOOT
PJP	PARTIAL JOINT PENETRATION WELD
PL	PLATE
PSI	POUNDS PER SQUARE INCH
PT	PENETRANT TESTING
Q	
QA	QUALITY ASSURANCE
QAI	QUALITY ASSURANCE INSPECTOR
QC	QUALITY CONTROL
QCI	QUALITY CONTROL INSPECTOR
R	
RAD	RADIUS
RC	REINFORCED CONCRETE
REINF	REINFORCE, REINFORCING
REQD	REQUIRED
REV	REVISION
RT	RADIOGRAPHIC TESTING (X-RAY)
S	
S	AMERICAN STANDARD SHAPE
SAD	SEE ARCHITECTURAL DRAWINGS
SC	SLIP CRITICAL
SCHED	SCHEDULE
SDL	SUPERIMPOSED DEAD LOAD
SECT	SECTION
SEOR	STRUCTURAL ENGINEER OF RECORD
SLRS	SEISMIC LOAD RESISTING SYSTEM
SFRS	SEISMIC FORCE RESISTING SYSTEM
SIM	SIMILAR
SJ	SEISMIC JOINT
SLBB	SHORT LEG BACK TO BACK
SMF OR SMRF	SPECIAL MOMENT RESISTING FRAME
SOG	SLAB ON GRADE
SPEC, SPECS	SPECIFICATION, SPECIFICATIONS
SQ	SQUARE
SS	STAINLESS STEEL
SSL	SHORT SLOTTED HOLE
STD	STANDARD
STIFF	STIFFENER
SW	SHEAR WALL
SYM	SYMMETRIC, SYMMETRICAL
T	
T	TOP REINFORCING BARS
TB	TOP REINFORCING BARS - BOTTOM (INNER) LAYER
TT	TOP REINFORCING BARS - TOP (OUTER) LAYER
T&B	TOP AND BOTTOM
TEMP	TEMPORARY
THK	THICK
TOB	TOP OF BEAM
TOC	TOP OF CONCRETE
TOF	TOP OF FOOTING
TOP	TOP REINFORCING BARS
TOS	TOP OF STEEL
TOW	TOP OF WALL
tw	WEB THICKNESS
TYP	TYPICAL
U	
UNO	UNLESS NOTED OTHERWISE
URM	UNREINFORCED MASONRY
UT	ULTRASONIC TEST
V	
VERT	VERTICAL
VIF	VERIFY IN FIELD
W	
W	WIDE, WIDTH
W/	WITH
W/O	WITHOUT
WF	WIDE FLANGE
WP	WORK POINT
WPS	WELDING PROCEDURE SPECIFICATION

FRAMING NOTES

1. STEEL BEAMS ARE PLACED WITH THEIR WEBS IN THE VERTICAL PLANE UNLESS NOTED OTHERWISE.
2. DIMENSIONS TO STEEL MEMBERS ARE TO THEIR CENTERLINES UNLESS NOTED OTHERWISE.
3. BEAMS SHALL BE EVENLY SPACED WITHIN A BAY UNLESS NOTED OTHERWISE.
4. BEAMS NOT LOCATED IN PLAN BY A DIMENSION LINE SHALL BE EQUALLY SPACED BETWEEN DIMENSIONED MEMBERS.
5. CENTERLINE OF STEEL BEAMS ADJACENT TO SLAB EDGES AND SLAB OPENINGS SHALL BE LOCATED AT 9" FROM SLAB EDGE UNLESS NOTED OTHERWISE.
6. ALL STEEL BEAMS, INCLUDING BEAMS SHOWN ON FRAME ELEVATIONS, WITH DECKING AND CONCRETE FILL FOR WHICH SHEAR STUDS ARE NOT SPECIFIED SHALL HAVE A MINIMUM OF ONE SHEAR STUD AT 12" ON CENTER UNLESS NOTED OTHERWISE.
7. TOP OF STEEL ELEVATIONS SHALL BE BASED ON TOP OF STRUCTURAL CONCRETE ELEVATION, CONCRETE FILL THICKNESS AND DEPTH OF METAL DECKING UNLESS NOTED OTHERWISE.
8. TOP OF STEEL ELEVATION NOTED ON PLANS FOR MAIN MEMBERS WITH SECONDARY TRIM MEMBERS (SUCH AS BENT PLATE, ANGLE, OR WT ALONG PARTIAL OR FULL LENGTH OF MEMBER) IS TO THE TOP OF MAIN STEEL MEMBER UNLESS NOTED OTHERWISE.
9. FOR SLOPING MEMBERS, THE TOP OF STEEL ELEVATIONS AT THE LOW AND HIGH POINTS SHALL COINCIDE WITH THE TOP OF STEEL ELEVATIONS OF THE MEMBERS THEY FRAME TO AT THESE LOCATIONS, UNLESS NOTED OTHERWISE.
10. CAMBERS INDICATED FOR MEMBERS ARE UPWARD. DOWNWARD CAMBERS ARE GIVEN AS NEGATIVE.
11. ALL CONNECTIONS SHALL BE COMPLETED PRIOR TO CASTING SLABS.

SYMBOLS AND NOTATIONS

EL +"-"" INDICATES ELEVATION AT TOP OF STRUCTURAL CONCRETE.

INDICATES CHANGE IN SLAB ELEVATION.

INDICATES CHANGE IN SLAB SLOPE.

INDICATES CHANGE IN SLAB SLOPE.

INDICATES CHANGE IN SLAB SLOPE.

INDICATES REINFORCED CONCRETE COLUMN AND WALL.

INDICATES WALL/BEAM BELOW.

INDICATES EXISTING REINFORCED CONCRETE ELEMENTS.

INDICATES EXISTING REINFORCED CONCRETE ELEMENTS TO BE DEMOLISHED.

GB-XX INDICATES FOUNDATION GRADE BEAM PER DETAIL XXXX.

TB-XX INDICATES FOUNDATION TIE BEAM PER DETAIL XXXX.

P-N-DDT INDICATES PILE CAP PER SCHEDULE 1/S611 (N=NUMBER OF PILES, DD=DIAMETER IN INCHES, T=TYPE).

INDICATE ONE WAY SPANNING SLAB.
SLAB ON METAL DECK: D-T PER SCHEDULE XXXX
REINFROCED CONCRETE: C-T PER SCHEDULE XXXX

INDICATES TWO WAY SPANNING SLAB.
SLAB ON GRADE (SOG) PER DETAIL XXXX
SUSPENDED SLAB PER DETAIL XXXX

INDICATES NON-SFRS MOMENT CONNECTION PER DETAIL 4 AND 6/S631.

INDICATES AXIALLY RELEASED SHEAR CONNECTION PER DETAIL XXXX.

INDICATES FULL DEPTH SHEAR CONNECTION PER DETAIL XXXX.

INDICATES BOLTED DRAG CONNECTION PER DETAIL XXXX.

INDICATES BOLTED DRAG CONNECTION PER DETAIL XXXX.

INDICATES TOP FLANGE WELDED DRAG CONNECTION PER DETAIL XXXX.

INDICATES DRAG CONNECTION AT CONCRETE EMBED PER DETAIL XXXX.

INDICATES SHEAR CONNECTION AT CONCRETE EMBED PER DETAIL XXXX.

INDICATES SFRS MOMENT FRAME CONNECTION PER DETAIL XXXX.

NOT FOR CONSTRUCTION

09.AUG.21

belzberg architects
2321 MAIN STREET
SANTA MONICA, CA 90405
310.453.9611
www.belzbergarchitects.com

ARUP
Arup North America Ltd.
900 Wilshire Boulevard,
19th Floor
Los Angeles CA 90017
Tel: 310 578 4400
www.arup.com

#	DESCRIPTION	DATE

GENERAL NOTES

PROJECT NUMBER:

S003

8/10/2021 5:29:11 PM

STATEMENT OF SPECIAL INSPECTIONS - GENERAL

1. THIS SECTION OF THE GENERAL NOTES IS THE STATEMENT OF SPECIAL INSPECTION PER CBC 2016 SECTION 1704.3.

2. THE OWNER SHALL RETAIN THE SERVICES OF AN APPROVED AGENCY WHICH PERFORMS THE REQUIRED TESTS AND SPECIAL INSPECTIONS AS DEFINED IN THE CONTRACT DOCUMENTS.
   A. FOR THE PURPOSE OF THESE CONTRACT DOCUMENTS, APPROVED AGENCY IS DEFINED AS AN ESTABLISHED AND RECOGNIZED AGENCY REGULARLY ENGAGED IN CONDUCTING TESTS OR FURNISHING INSPECTION SERVICES AND ACCEPTABLE TO THE BUILDING OFFICIAL OR AUTHORITY HAVING JURISDICTION.
   B. APPROVED AGENCY SHALL BE SATISFACTORY TO THE ARCHITECT AND STRUCTURAL ENGINEER OF RECORD.
   C. APPROVED AGENCY'S SPECIAL AND DEPUTY INSPECTORS SHALL HAVE EXPERIENCE AND TRAINING RELEVANT TO THE TYPE AND COMPLEXITY OF THE PROJECT. THE INSPECTORS SHALL SUBMIT WRITTEN DOCUMENTATION OF THEIR COMPETENCY TO THE BUILDING AUTHORITY.

3. THE CONSTRUCTION OR WORK FOR WHICH SPECIAL INSPECTION IS REQUIRED SHALL REMAIN ACCESSIBLE AND EXPOSED FOR SPECIAL INSPECTION PURPOSES UNTIL COMPLETION OF THE REQUIRED SPECIAL INSPECTIONS.

4. SPECIAL INSPECTORS SHALL KEEP RECORDS OF INSPECTIONS. THE SPECIAL INSPECTOR SHALL FURNISH INSPECTION REPORTS TO THE BUILDING OFFICIAL, AND TO THE REGISTERED DESIGN PROFESSIONAL IN RESPONSIBLE CHARGE.

5. REPORTS SHALL INDICATE THAT WORK INSPECTED WAS OR WAS NOT COMPLETED IN CONFORMANCE TO APPROVED CONSTRUCTION DOCUMENTS. DISCREPANCIES SHALL BE BROUGHT TO THE IMMEDIATE ATTENTION OF THE CONTRACTOR FOR CORRECTION. IF THEY ARE NOT CORRECTED, THE DISCREPANCIES SHALL BE BROUGHT TO THE ATTENTION OF THE BUILDING OFFICIAL AND TO THE REGISTERED DESIGN PROFESSIONAL IN RESPONSIBLE CHARGE PRIOR TO THE COMPLETION OF THAT PHASE OF THE WORK.

6. A FINAL REPORT DOCUMENTING REQUIRED SPECIAL INSPECTIONS AND CORRECTION OF ANY DISCREPANCIES NOTED IN THE INSPECTIONS SHALL BE SUBMITTED AT A POINT IN TIME AGREED UPON PRIOR TO THE START OF WORK BY THE APPLICANT AND THE BUILDING OFFICIAL.

7. WHERE FABRICATION OF STRUCTURAL MEMBERS AND ASSEMBLIES IS PERFORMED ON THE PREMISES OF A FABRICATOR'S SHOP, SPECIAL INSPECTIONS OF FABRICATED ITEMS ARE REQUIRED.

8. CONTRACTORS RESPONSIBLE FOR THE CONSTRUCTION OF A WIND OR SEISMIC FORCE RESISTING SYSTEM/COMPONENT LISTED IN THE "STATEMENT OF SPECIAL INSPECTION" SHALL SUBMIT A WRITTEN STATEMENT OF RESPONSIBILITY TO THE BUILDING OFFICIAL AND INSPECTOR OF RECORD, AND THE OWNER PRIOR TO THE COMMENCEMENT OF WORK ON SUCH SYSTEM OR COMPONENT PER SECTION 1704.4.

9. CONTINUOUS SPECIAL INSPECTOR BY A REGISTERED DEPUTY INSPECTOR IS REQUIRED FOR FIELD WELDING, POST-INSTALLED ADHESIVE ANCHORS INSTALLED HORIZONTALLY OR UPWARDLY INCLINED TO RESIST SUSTAINED TENSION LOADS, SHOTCRETE PLACEMENT, CONCRETE STRENGTH F'c>2500 PSI, SPRAYED-ON FIREPROOFING, ENGINEERED MASONRY, HIGH-LIFT GROUTING, HIGH LOAD DIAPHRAGMS AND SPECIAL MOMENT-RESISTING CONCRETE FRAMES. (1705 & CHAPTER 19, 21 AND 22)

10. WHERE SPECIAL INSPECTION OR TESTING IS REQUIRED, THE REGISTERED DESIGN PROFESSIONAL IN RESPONSIBLE CHARGE SHALL INCLUDE A STATEMENT OF SPECIAL INSPECTIONS ON THE PLANS WHICH INCLUDE MATERIALS, SYSTEMS, COMPONENTS AND WORK REQUIRED TO HAVE SPECIAL INSPECTIONS OR TESTS, THE TYPE AND EXTENT OF EACH SPECIAL INSPECTION AND TEST, AND WHETHER IT WILL BE CONTINUOUS OR PERIODIC. (1704.2.3)

11. SPECIAL ACTIVITY INSPECTION IS REQUIRED FOR (BUILDINGS OVER 5 STORIES OR 60' IN HEIGHT) (BUILDINGS OVER 50,000 SQ. FT. OF GROUND FLOOR AREA) (BUILDINGS OVER 200,000 SQ. FT. OF TOTAL FLOOR AREA)(1705.1.6)

12. APPROVED AGENCY SHALL PERFORM SPECIAL INSPECTIONS IN ACCORDANCE WITH CBC SECTION 1705 INCLUDING SPECIAL INSPECTIONS FOR WIND AND SEISMIC RESISTANCE PER CBC SECTIONS 1705.11 & 1705.12 AND PER THE INSTRUCTIONS BELOW. REFER TO SPECIFICATIONS FOR ADDITIONAL REQUIREMENTS:
   A. STEEL CONSTRUCTION OTHER THAN STRUCTURAL STEEL:
      A.1 SPECIAL INSPECTIONS SHALL BE PERFORMED PER CBC SECTION 1705.2
      A.2 WELDING INSPECTION SHALL BE IN ACCORDANCE WITH AWS D1.4 AND ACI 318.
   B. CONCRETE INCLUDING SHOTCRETE CONSTRUCTION:
      B.1 SPECIAL INSPECTIONS SHALL BE PERFORMED PER CBC TABLE 1705.3
      B.2 WELDABILITY OF REINFORCEMENT, EXCEPT THAT WHICH CONFORMS TO ASTM A706 SHALL BE DETERMINED IN ACCORDANCE WITH THE REQUIREMENTS OF SECTION 3.5.2 OF ACI 318.
   C. SOILS:
      C.1 SPECIAL INSPECTIONS SHALL BE PERFORMED PER CBC TABLE 1705.6
   D. DRIVEN DEEP FOUNDATIONS:
      D.1 SPECIAL INSPECTIONS SHALL BE PERFORMED PER CBC TABLE 1705.7
   E. CAST-IN-PLACE DEEP FOUNDATION ELEMENTS:
      E.1 SPECIAL INSPECTIONS SHALL BE PERFORMED PER CBC TABLE 1705.8
   G. PROPRIETARY PRODUCTS NOT COVERED BY THE MATERIAL SPECIFIC SECTIONS OF THESE GENERAL NOTES SHALL BE TESTED AND INSPECTED IN ACCORDANCE WITH THE ICC REPORT OR IN ACCORDANCE WITH THE ACCEPTED PRODUCT APPROVAL.
   H. STEEL CONSTRUCTION FOR NON-SFRS ELEMENTS:
      H.1 SPECIAL INSPECTION SHALL BE PERFORMED PER TABLES H.1 THROUGH H.6 FOR ALL STRUCTURAL STEEL ELEMENTS NOT PART OF THE SFRS.
      H.2 DEFINITIONS:
      QC = QUALITY CONTROL IS THE TESTING AND INSPECTION PROGRAM PERFORMED BY THE FABRICATOR'S OR ERECTOR'S QUALITY CONTROL INSPECTOR (QCI).
      QA = QUALITY ASSURANCE IS THE TESTING AND INSPECTION PROGRAM PERFORMED BY APPROVED AGENCY AND THEIR INSPECTORS (QAI).
      O – OBSERVE THESE ITEMS ON A RANDOM BASIS. OPERATIONS NEED NOT BE DELAYED PENDING THESE INSPECTIONS. REFER TO THE RESPECTIVE TABLES H.1 THROUGH H.6 OF THE GENERAL NOTES.
      P – PERFORM THESE TASKS FOR EACH WELDED JOINT OR MEMBER (FOR WELDS) OR BOLTED CONNECTION (FOR BOLTS) OR EACH STEEL ELEMENT (FOR COMPOSITE CONSTRUCTION) PER THE RESPECTIVE TABLES H.1 THROUGH H.6 OF THE GENERAL NOTES.
      H.2 QUALTIY CONTROL (QC) INSPECTION TASKS SHALL BE PERFORMED BY THE FABRICATOR'S OR ERECTOR'S QUALITY CONTROL INSPECTOR (QCI). AS APPLICABLE, IN ACCORDANCE WITH THE GENERAL NOTES, THE TABLES H.1 THROUGH H.6 AS SHOWN BELOW AND AISC 360. LISTED FOR QC ARE THOSE INSPECTIONS PERFORMED BY THE QCI TO ENSURE THAT THE WORK IS PERFORMED IN ACCORDANCE WITH THE CONSTRUCTION DOCUMENTS. FOR QC INSPECTION, THE APPLICABLE CONSTRUCTION DOCUMENTS ARE THE SHOP DRAWINGS AND THE ERECTION DRAWINGS, AND THE APPLICABLE REFERENCED SPECIFICATIONS, CODES AND STANDARDS.
      H.3 QUALITY ASSURANCE (QA) INSPECTION OF FABRICATED ITEMS SHALL BE MADE AT THE FABRICATOR'S PLANT. THE QUALITY ASSURANCE INSPECTOR (QAI) SHALL SCHEDULE THIS WORK TO MINIMIZE INTERRUPTION TO THE WORK OF THE FABRICATOR. QA INSPECTION OF THE ERECTED STEEL SYSTEM SHALL BE MADE AT THE PROJECT SITE. THE QAI SHALL SCHEDULE THIS WORK TO MINIMIZE INTERRUPTION TO THE WORK OF THE ERECTOR. THE QAI SHALL REVIEW THE MATERIAL TEST REPORTS AND CERTIFICATIONS PER AISC 360 SECTION N FOR COMPLIANCE WITH THE CONSTRUCTION DOCUMENTS. QA INSPECTION TASKS SHALL BE PERFORMED BY THE QAI, IN ACCORDANCE WITH THE GENERAL NOTES, TABLES H.1 THROUGH H.6 AS SHOWN BELOW AND AISC 360. LISTED FOR QA ARE THOSE INSPECTIONS PERFORMED BY THE QAI TO ENSURE THAT THE WORK IS PERFORMED IN ACCORDANCE WITH THE CONSTRUCTION DOCUMENTS CONCURRENT WITH THE SUBMITTAL OF SUCH REPORTS TO THE AHJ, EOR OR OWNER, THE QA AGENCY SHALL SUBMIT TO THE FABRICATOR AND ERECTOR: (1) INSPECTION REPORTS, (2) NONDESTRUCTIVE TESTING REPORTS.
      H.6 APPPROVED AGENCY SHALL USE OBSERVATION OF WELDING OPERATIONS AND VISUAL INSPECTION OF IN-PROCESS AND COMPLETED WELDS AS THE PRIMARY METHOD TO CONFIRM THAT THE MATERIALS, PROCEDURES AND WORKMANSHIP ARE IN CONFORMANCE WITH THE CONSTRUCTION DOCUMENTS. FOR STRUCTURAL STEEL, ALL PROVISIONS OF AWS D1.1/D1.1M STRUCTURAL WELDING CODE - STEEL FOR STATICALLY LOADED STRUCTURES SHALL APPLY WITH EXCEPTIONS AS NOTED IN THESE GENERAL NOTES OR AISC 360.
      H.7 APPROVED AGENCY SHALL PERFORM THE QA USING THE FOLLOWING NON-DESTRUCTIVE TESING METHODES: ULTRASONIC TESTING (UT), MAGNETIC PARTICLE TESTING (MT), PENETRANT TESTING (PT) AND RADIOGRAPHIC TESTING (RT), WHERE REQUIRED, IN ACCORDANCE WITH AWS D1.1/D1.1M. ACCEPTANCE CRITERIA SHALL BE IN ACCORDANCE WITH AWS D1.1/D1.1M FOR STATICALLY LOADED STRUCTURES, UNLESS OTHERWISE DESIGNATED IN THE DESIGN DRAWINGS OR PROJECT SPECIFICATIONS.
      H.8 COMPLETE JOINT PENETRATION GROOVE WELD NON-DESTRUCTIVE TESING: FOR STRUCTURES IN RISK CATEGORY III OR IV AS CLASSIFIED IN THE GENERAL NOTES, RISK CATEGORY OF BUILDINGS AND OTHER STRUCTURES FOR FLOOD, WIND, SNOW, EARTHQUAKE AND ICE LOADS, OF ASCE, UT SHALL BE PER-FORMED BY QA ON ALL CJP GROOVE WELDS SUBJECT TO TRANSVERSELY APPLIED TENSION LOADING IN BUTT, T- AND CORNER JOINTS, IN MATERIALS 5/16 IN THICK OR GREATER. FOR STRUCTURES IN RISK CATEGORY II, UT SHALL BE PERFORMED BY QA ON 10% OF CJP GROOVE WELDS IN BUTT, T- AND CORNER JOINTS SUBJECT TO TRANSVERSELY APPLIED TENSION LOADING, IN MATERIALS 5/16 IN THICK OR GREATER.
      H.9 ACCESS HOLES: THERMALLY CUT SURFACES OF ACCESS HOLES SHALL BE TESTED BY QA USING MT OR PT, WHEN THE FLANGE THICKNESS EXCEEDS 2 IN FOR ROLLED SHAPES, OR WHEN THE WEB THICKNESS EXCEEDS 2 IN FOR BUILT-UP SHAPES. ANY CRACK SHALL BE DEEMED UNACCEPTABLE REGARDLESS OF SIZE OR LOCATION.
      H.10 REDUCTION OF RATE OF ULTRASONIC TESTING: THE RATE OF UT IS PERMITTED TO BE REDUCED IF APPROVED BY THE EOR AND THE AHJ. WHERE THE INITIAL RATE FOR UT IS 100%, THE NDT RATE FOR AN INDIVIDUAL WELDER OR WELDING OPERATOR IS PERMITTED TO BE REDUCED TO 25%, PROVIDED THE REJECT RATE, THE NUMBER OF WELDS CONTAINING UNACCEPTABLE DEFECTS DIVIDED BY THE NUMBER OF WELDS COMPLETED, IS DEMONSTRATED TO BE 5% OR LESS OF THE WELDS TESTED FOR THE WELDER OR WELDING OPERATOR. A SAMPLING OF AT LEAST 40 COMPLETED WELDS FOR A JOB SHALL BE MADE FOR SUCH REDUCTION EVALUATION. FOR EVALUATING THE REJECT RATE OF CONTINUOUS WELDS OVER 3 FT IN LENGTH WHERE THE EFFECTIVE THROAT IS 1 IN OR LESS, EACH 12 IN INCREMENT OR FRACTION THEREOF SHALL BE CONSIDERED AS ONE WELD. FOR EVALUATING THE REJECT RATE ON CONTINUOUS WELDS OVER 3 FT IN LENGTH WHERE THE EFFECTIVE THROAT IS GREATER THAN 1 IN, EACH 6 IN OF LENGTH OR FRACTION THEREOF SHALL BE CONSIDERED ONE WELD.
      H.11 INCREASE IN RATE OF ULTRASONIC TESTING: FOR STRUCTURES IN RISK CATEGORY II, WHERE THE INITIAL RATE FOR UT IS 10%, THE NDT RATE FOR AN INDIVIDUAL WELDER OR WELDING OPERATOR SHALL BE INCREASED TO 100% SHOULD THE REJECT RATE, THE NUMBER OF WELDS CONTAINING UNACCEPTABLE DEFECTS DIVIDED BY THE NUMBER OF WELDS COMPLETED, EXCEEDS 5% OF THE WELDS TESTED FOR THE WELDER OR WELDING OPERATOR. A SAMPLING OF AT LEAST 20 COMPLETED WELDS FOR A JOB SHALL BE MADE PRIOR TO IMPLEMENTING SUCH AN INCREASE. WHEN THE REJECT RATE FOR THE WELDER OR WELDING OPERATOR, AFTER A SAMPLING OF AT LEAST 40 COMPLETED WELDS, HAS FALLEN TO 5% OR LESS, THE RATE OF UT SHALL BE RETURNED TO 10%. FOR EVALUATING THE REJECT RATE OF CONTINUOUS WELDS OVER 3 FT IN LENGTH WHERE THE EFFECTIVE THROAT IS 1 IN OR LESS,

STATEMENT OF SPECIAL INSPECTIONS - GENERAL (2)

      H.12 INSPECTION OF HIGH-STRENGTH BOLTING: OBSERVATION OF BOLTING OPERATIONS SHALL BE THE PRIMARY METHOD USED TO CONFIRM THAT THE MATERIALS, PROCEDURES AND WORKMANSHIP INCORPORATED IN CONSTRUCTION ARE IN CONFORMANCE WITH THE CONSTRUCTION DOCUMENTS AND THE PROVISIONS OF THE RCSC SPECIFICATION.
      H.13 SNUG-TIGHT BOLTED JOINTS: FOR SNUG-TIGHT JOINTS, PRE-INSTALLATION VERIFICATION TESTING AS SPECIFIED IN TABLE N5.6-1 AND MONITORING OF THE INSTALLATION PROCEDURES AS SPECIFIED IN TABLE N5.6-2 ARE NOT APPLICABLE. THE QCI AND QAI NEED NOT BE PRESENT DURING THE INSTALLATION OF FASTENERS IN SNUG-TIGHT JOINTS.
      H.14 PRE-TENSIONED OR SLIP-CRITICAL BOLTED JOINTS: FOR PRETENSIONED JOINTS AND SLIP-CRITICAL JOINTS, WHEN THE INSTALLER IS USING THE TURN-OF-NUT METHOD WITH MATCHMARKING TECHNIQUES, THE DIRECT-TENSION-INDICATOR METHOD, OR THE TWIST-OFF-TYPE TENSION CONTROL BOLT METHOD, MONITORING OF BOLT PRE-TENSIONING PROCEDURES SHALL BE AS SPECIFIED IN TABLE N5.6-2. THE QCI AND QAI NEED NOT BE PRESENT DURING THE INSTALLATION OF FASTENERS WHEN THESE METHODS ARE USED BY THE INSTALLER. OTHER PROCEDURES THAN THE TWIST OFF METHOD OR THE DIRECT TENSION INDICATORS ARE NOT PERMITTED PER PROJECT SPECIFICATION.
      H.15 THE QAI SHALL BE ON THE PREMISES FOR INSPECTION DURING THE PLACEMENT OF ANCHOR RODS AND OTHER EMBEDMENTS SUPPORTING STRUCTURAL STEEL FOR COMPLIANCE WITH THE CONSTRUCTION DOCUMENTS. AS A MINIMUM, THE DIAMETER, GRADE, TYPE AND LENGTH OF THE ANCHOR ROD OR EMBEDDED ITEM, AND THE EXTENT OR DEPTH OF EMBEDMENT INTO THE CONCRETE, SHALL BE VERIFIED PRIOR TO PLACEMENT OF CONCRETE.
      H.16 FOR WELDING OF STEEL DECK, OBSERVATION OF WELDING OPERATIONS AND VISUAL INSPECTION OF IN-PROCESS AND COMPLETED WELDS SHALL BE THE PRIMARY METHOD TO CONFIRM THAT THE MATERIALS, PROCEDURES AND WORKMANSHIP ARE IN CONFORMANCE WITH THE CONSTRUCTION DOCUMENTS. ALL APPLICABLE PROVISIONS OF AWS D1.3/D1.3M, STRUCTURAL WELDING CODE—SHEET STEEL, SHALL APPLY. DECK WELDING INSPECTION SHALL INCLUDE VERIFICATION OF THE WELDING CONSUMABLES, WELDING PROCEDURE SPECIFICATIONS AND QUALIFICATIONS OF WELDING PERSONNEL PRIOR TO THE START OF THE WORK, OBSERVATIONS OF THE WORK IN PROGRESS, AND A VISUAL INSPECTION OF ALL COMPLETED WELDS. FOR STEEL DECK ATTACHED BY FASTENINGSYSTEMS OTHER THAN WELDING, INSPECTION SHALL INCLUDE VERIFICATION OF THE FASTENERS TO BE USED PRIOR TO THE START OF THE WORK, OBSERVATIONS OF THE WORK IN PROGRESS TO CONFIRM INSTALLATION IN CONFORMANCE WITH THE MANUFACTURER'S RECOMMENDATIONS, AND A VISUAL INSPECTION OF THE COMPLETED INSTALLATION.

   I. STEEL CONSTRUCTION FOR SFRS ELEMENTS (SPECIAL INSPECTION FOR SEISMIC RESISTENCE PER CBC 2016 SECTION 1705.12).
      I.1 SPECIAL INSPECTION SHALL BE PERFORMED PER TABLES I.1 THROUGH I.11 FOR ALL STRUCTURAL STEEL ELEMENTS DESIGNATED AS PART OF THE SFRS.
      I.2 IN ADDITION, SPECIAL INSPECTION SHALL BE PERFORMED PER TABLES I.1 THROUGH I.11 FOR ALL WELDS DESIGNATED AS AWS D1.8 (MARKED AS D1.8 ON DRAWINGS) AND ALL WELDS DESIGNATED AS AWS D1.8-DCW (DEMAND CRITICAL WELDS, MARKED AS DCW ON DRAWINGS).
      I.3 DEFINITIONS:
      QC = QUALITY CONTROL IS THE TESTING AND INSPECTION PROGRAM PERFORMED BY THE FABRICATOR'S OR ERECTOR'S QUALITY CONTROL INSPECTOR (QCI).
      QA = QUALITY ASSURANCE IS THE TESTING AND INSPECTION PROGRAM PERFORMED BY APPROVED AGENCY AND THEIR INSPECTORS (QAI).
      O = OBSERVE. OBSERVE THESE ITEMS ON A RANDOM BASIS. OPERATIONS NEED NOT BE DELAYED PENDING THESE INSPECTIONS. REFER TO THE RESPECTIVE TABLES I.1 THROUGH I.11.
      P = PERFORM. PERFORM THESE TASKS PRIOR TO THE FINAL ACCEPTANCE OF THE ITEM. REFER TO THE RESPECTIVE TABLES I.1 THROUGH I.11.
      D – DOCUMENT. THE INSPECTOR SHALL PREPARE REPORTS INDICATING THAT THE WORK HAS BEEN PERFORMED IN ACCORDANCE WITH THE CONTRACT DOCUMENTS. THE REPORT NEED NOT PROVIDE DETAILED MEASUREMENTS FOR JOINT FIT-UP, WPS SETTINGS, COMPLETED WELDS, OR OTHER INDIVIDUAL ITEMS LISTED IN THE TABLES. FOR SHOP FABRICATION, THE REPORT SHALL INDICATE THE PIECE MARK OF THE PIECE INSPECTED. FOR FIELD WORK, THE REPORT SHALL DELINEATE THE REFERENCE GRID LINES AND FLOOR OR ELEVATION INSPECTED. WORK NOT IN COMPLIANCE WITH THE CONTRACT DOCUMENTS AND WHETHER THE NONCOMPLIANCE HAS BEEN SATISFACTORILY REPAIRED SHALL BE NOTED IN THE INSPECTION REPORT.
      I.4 WELDING INSPECTION AND NONDESTRUCTIVE TESTING SHALL SATISFY THE REQUIREMENTS OF AISC 360, AISC 341 AND AWS D1.8/D1.8M.
      I.5 NONDESTRUCTIVE TESING OF WELDED JOINTS: IN ADDITION TO THE INSPECTION REQUIREMENTS DEFINED IN TABLES H.1 THROUGH H.2, NONDESTRUCTIVE TESTING OF WELDED JOINTS SHALL BE AS PER TABLES I.1 THROUGH I.3.
      I.6 K-AREA NONDESTRUCTIVE TESTING: WHERE WELDING OF DOUBLER PLATES, CONTINUITY PLATES OR STIFFENERS HAS BEEN PERFORMED IN THE K-AREA, THE WEB SHALL BE TESTED FOR CRACKS USING MAGNETIC PARTICLE TESTING (MT). THE MT INSPECTION AREA SHALL INCLUDE THE K-AREA BASE METAL WITHIN 3 IN. (75 MM) OFTHE WELD. THE MT SHALL BE PERFORMED NO SOONER THAN 48 HOURS FOLLOWING COMPLETION OF THE WELDING.
      I.7 COMPLETE JOINT PENETRATION GROOVE WELD NONDESTRUCTIVE TESTING: ULTRASONIC TESTING (UT) SHALL BE PERFORMED ON 100% OF CJP GROOVE WELDS IN MATERIALS 5/16 IN THICK OR GREATER. ULTRASONIC TESTING IN MATERIALS LESS THAN 5/16 IN THICK IS NOT REQUIRED. WELD DISCONTINUITIES SHALL BE ACCEPTED OR REJECTED ON THE BASIS OF CRITERIA OF AWS D1.1/D1.1M TABLE 6.2. MAGNETIC PARTICLE TESTING SHALL BE PERFORMED ON 25% OF ALL BEAM-TO-COLUMN CJP GROOVE WELDS. THE RATE OF UT AND MT IS PERMITTED TO BE REDUCED AS DESCRIBED BELOW. EXCEPTION: FOR ORDINARY MOMENT FRAMES, UT AND MT OF CJP GROOVE WELDS ARE REQUIRED ONLY FOR DEMAND CRITICAL WELDS.
      I.8 BASE METAL NDT FOR LAMELLAR TEARING AND LAMINATIONS: AFTER JOINT COMPLETION, BASE METAL THICKER THAN 1-1/2 IN LOADED IN TENSION IN THE THROUGH-THICKNESS DIRECTION IN TEE AND CORNER JOINTS, WHERE THE CONNECTED MATERIAL IS GREATER THAN 3/4 IN AND CONTAINS CJP GROOVE WELDS, SHALL BE ULTRASONICALLY TESTED FOR DISCONTINUITIES BEHIND AND ADJACENT TO THE FUSION LINE OF SUCH WELDS. ANY BASE METAL DISCONTINUITIES FOUND WITHIN T/4 OF THE STEEL SURFACE SHALL BE ACCEPTED OR REJECTED ON THE BASIS OF CRITERIA OF AWS D1.1/D1.1M TABLE 6.2, WHERE T IS THE THICKNESS OF THE PART SUBJECTED TO THE THROUGH-THICKNESS STRAIN.
      I.9 BEAM COPE AND ACCESS HOLE NDT: AT WELDED SPLICES AND CONNECTIONS, THERMALLY CUT SURFACES OF BEAM COPES AND ACCESSHOLES SHALL BE TESTED USING MAGNETIC PARTICLE TESTING OR PENETRANT TESTING, WHEN THE FLANGE THICKNESS EXCEEDS 1-1/2 IN FOR ROLLED SHAPES, OR WHEN THE WEB THICKNESS EXCEEDS 11/2 IN FOR BUILT-UP SHAPES.
      I.10 REDUCED BEAM SECTION REPAIR NDT: MAGNETIC PARTICLE TESTING SHALL BE PERFORMED ON ANY WELD AND ADJACENT AREA OF THE REDUCED BEAM SECTION (RBS) CUT SURFACE THAT HAS BEEN REPAIRED BY WELDING, OR ON THE BASE METAL OF THE RBS CUT SURFACE IF A SHARP NOTCH HAS BEEN REMOVED BY GRINDING.
      I.11 WELD TAB REMOVAL SITES: AT THE END OF WELDS WHERE WELD TABS HAVE BEEN REMOVED, MAGNETIC PARTICLE TESTING SHALL BE PERFORMED ON THE SAME BEAM-TO-COLUMN JOINTS RECEIVING UT AS REQUIRED PER SECTION I.7 ABOVE. THE RATE OF MT IS PERMITTED TO BE REDUCED IN ACCORDANCE WITH SECTION I.13. MT OF CONTINUITY PLATE WELD TABS REMOVAL SITES IS NOT REQUIRED.
      I.12 REDUCTION OF PERCENTAGE OF ULTRASONIC TESTING: THE REDUCTION OF PERCENTAGE OF UT IS PERMITTED TO BE REDUCED IN ACCORDANCE WITH H.10, EXCEPT NO REDUCTION IS PERMITTED FOR DEMAND CRITICAL WELDS.
      I.13 REDUCTION OF PERCENTAGE OF MAGNETIC PARTICLE TESTING: THE AMOUNT OF MT ON CJP GROOVE WELDS IS PERMITTED TO BE REDUCED IF APPROVED BY THE ENGINEER OF RECORD AND THE AUTHORITY HAVING JURISDICTION. THE MT RATE FOR AN INDIVIDUAL WELDER OR WELDING OPERATOR IS PERMITTED TO BE REDUCED TO 10%, PROVIDED THE REJECT RATE IS DEMONSTRATED TO BE 5% OR LESS OF THE WELDS TESTED FOR THE WELDER OR WELDING OPERATOR. A SAMPLING OF AT LEAST 20 COMPLETED WELDS FOR A JOB SHALL BE MADE FOR SUCH REDUCTION EVALUATION. REJECT RATE IS THE NUMBER OF WELDS CONTAINING REJECTABLE DEFECTS DIVIDED BY THE NUMBER OF WELDS COMPLETED. THIS REDUCTION IS PROHIBITED ON WELDS IN THE K-AREA, AT REPAIR SITES, BACKING REMOVAL SITES, AND ACCESS HOLES.
      I.14 INSPECTION OF HIGH-STRENGTH BOLTING: BOLTING INSPECTION SHALL SATISFY THE REQUIREMENTS OF THE NON-SFRS INSPECTION REQUIREMENTS FOR BOLTING OF THE GENERAL. BOLTING INSPECTION SHALL BE PERFORMED BY BOTH QUALITY CONTROL AND QUALITY ASSURANCE PERSONNEL. AS A MINIMUM, THE TASKS SHALL BE AS LISTED IN TABLES I.3 THROUGH I.6
      I.15 OTHER STEEL STRUCTURE INSPECTIONS: OTHER INSPECTIONS OF THE STEEL STRUCTURE SHALL SATISFY THE REQUIREMENTS OF NON-SFRS ELEMENT AND THIS SECTION. SUCH INSPECTIONS SHALL BE PERFORMED BY BOTH QUALITY CONTROL AND QUALITY ASSURANCE PERSONNEL. WHERE APPLICABLE, THE INSPECTION TASKS LISTED IN TABLE I.7 SHALL BE PERFORMED.
      I.16 INSPECTION OF COMPOSITE STRUCTURES: WHERE APPLICABLE, INSPECTIONS OF THE COMPOSITE STRUCTURES SHALL SATISFY THE REQUIREMENTS OF THE NON-SFRS ELEMENTS AND THIS SECTION. THESE INSPECTIONS SHALL BE PERFORMED BY THE RESPONSIBLE CONTRACTOR'S QUALITY CONTROL PERSONNEL AND BY QUALITY ASSURANCE PERSONNEL. WHERE APPLICABLE, INSPECTION OF STRUCTURAL STEEL USED IN COMPOSITE STRUCTURES SHALL COMPLY TABLES I.8 THROUGH I.10. WHERE APPLICABLE, INSPECTION OF REINFORCED CONCRETE SHALL COMPLY WITH THE REQUIREMENTS OF ACI 318, AND INSPECTION OF WELDED REINFORCING STEEL SHALL COMPLY WITH THE APPLICABLE REQUIREMENTS PER TABLES H.1 AND H.2.
      I.17 INSPECTION OF H-PILES: WHERE APPLICABLE, INSPECTION OF PILING SHALL SATISFY THE REQUIREMENTS OF THIS SECTION. THESE INSPECTIONS SHALL BE PERFORMED BY BOTH THE RESPONSIBLE CONTRACTOR'S QUALITY CONTROL PERSONNEL AND BY QUALITY ASSURANCE PERSONNEL. WHERE APPLICABLE, THE INSPECTION TASKS LISTED IN TABLE I.11 SHALL BE PERFORMED.

STATEMENT OF SPECIAL INSPECTIONS

1. NON-SFRS STEEL MEMBERS - TABLES H.1 - H.6

TABLE H.1 | AISC 360-10 | TABLE N5.4-1

Inspection Tasks Prior to Welding	QC	QA
Welding procedure specifications (WPSs) available	P	P
Manufacturer certifications for welding consumables available	P	P
Material identification (type/grade)	O	O
Welder identification system (a)	O	O
Fit-up of groove welds (including joint geometry) • Joint preparation • Dimensions (alignment, root opening, root face, bevel) • Cleanliness (condition of steel surfaces) • Tacking (tack weld quality and location) • Backing type and fit (if applicable)	O	O
Configuration and finish of access holes	O	O
Fit-up of fillet welds • Dimensions (alignment, gaps at root) • Cleanliness (condition of steel surfaces) • Tacking (tack weld quality and location)	O	O
Check welding equipment	O	—

(a) The fabricator or erector, as applicable, shall maintain a system by which a welder who has welded a joint or member can be identified. Stamps, if used, shall be the low-stress type.

TABLE H.2 | AISC 360-10 | TABLE N5.4-3

Inspection Tasks After Welding	QC	QA
Welds cleaned	O	O
Size, length and location of welds	P	P
Welds meet visual acceptance criteria • Crack prohibition • Weld/base-metal fusion • Crater cross section • Weld profiles • Weld size • Undercut • Porosity	P	P
Arc strikes	P	P
k-area (b)	P	P
Backing removed and weld tabs removed (if required)	P	P
Repair activities	P	P
Document acceptance or rejection of welded joint or member	P	P

(b) When welding of doubler plates, continuity plates or stiffeners has been performed in the k-area, visually inspect the web k-area for cracks within 3 in. (75 mm) of the weld.

TABLE H.3 | AISC 360-10 | TABLE N5.6-1

Inspection Tasks Prior to Bolting	QC	QA
Manufacturer's certifications available for fastener materials	O	P
Fasteners marked in accordance with ASTM requirements	O	O
Proper fasteners selected for the joint detail (grade, type, bolt length if threads are to be excluded from shear plane)	O	O
Proper bolting procedure selected for joint detail	O	O
Connecting elements, including the appropriate faying surface condition and hole preparation, if specified, meet applicable requirements	O	O
Pre-installation verification testing by installation personnel observed and documented for fastener assemblies and methods used	P	O
Proper storage provided for bolts, nuts, washers and other fastener components	O	O

TABLE H.4 | AISC 360-10 | TABLE N5.6-2

Inspection Tasks During Bolting	QC	QA
Fastener assemblies, of suitable condition, placed in all holes and washers (if required) are positioned as required	O	O
Joint brought to the snug-tight condition prior to the pretensioning operatio	O	O
Fastener component not turned by the wrench prevented from rotating	O	O
Fasteners are pretensioned in accordance with the RCSC Specification, progressing systematically from the most rigid point toward the free edges	O	O

TABLE H.5 | AISC 360-10 | TABLE N5.6-3

Inspection Tasks After Bolting	QC	QA
Document acceptance or rejection of bolted connections	P	P

TABLE H.6 | AISC 360-10 | TABLE N6.1

Inspection of Steel Elements of Composite Construction Prior to Concrete Placement	QC	QA
Placement and installation of steel deck	P	P
Placement and installation of steel headed stud anchors	P	P
Document acceptance or rejection of steel elements	P	P

STATEMENT OF SPECIAL INSPECTIONS

1. SFRS STEEL MEMBERS - TABLES I.1 - I.11

TABLE I.1 | AISC 341-10 | TABLE J6-1
Visual Inspection Tasks Prior to Welding

Visual Inspection Tasks Prior to Welding	QA		QC	
	Task	Doc.	Task	Doc.
Material identification (Type/Grade)	O	–	O	–
Welder identification system	O	–	O	–
Fit-up of Groove Welds (including joint geometry) - Joint preparation - Dimensions (alignment, root opening, root face, bevel) - Cleanliness (condition of steel surfaces) - Tacking (tack weld quality and location) - Backing type and fit (if applicable)	P/O**	–	O	–
Configuration and finish of access holes	O	–	O	–
Fit-up of Fillet Welds - Dimensions (alignment, gaps at root) - Cleanliness (condition of steel surfaces) - Tacking (tack weld quality and location)	P/O**	–	O	–

** Following performance of this inspection task for ten welds to be made by a given welder, with the welder demonstrating understanding of requirements and possession of skills and tools to verify these items, the Perform designation of this task shall be reduced to Observe, and the welder shall perform this task. Should the inspector determine that the welder has discontinued performance of this task, the task shall be returned to Perform until such time as the Inspector has re-established adequate assurance that the welder will perform the inspection tasks listed.

TABLE I.2 | AISC 341-10 | TABLE J6-2
Visual Inspection Tasks During Welding

Visual Inspection Tasks During Welding	QA		QC	
	Task	Doc.	Task	Doc.
WPS followed - Settings on welding equipment - Travel speed - Selected welding materials - Shielding gas type/flow rate - Preheat applied - Interpass temperature maintained (min/max.) - Proper position (F, V, H, OH) - Intermix of filler metals avoided unless approved	O	–	O	–
Use of qualified welders	O	–	O	–
Control and handling of welding consumables - Packaging - Exposure control	O	–	O	–
Environmental conditions - Wind speed within limits - Precipitation and temperature	O	–	O	–

STANDARD QUALITY ASSURANCE PLAN

I. PURPOSE

The Standard Quality Assurance Plan (hereinafter referred to as "Standard QA Plan") for steel moment frames provides specifications, procedures, and illustrative details to comply with the requirements of the 2017 Los Angeles Building Code. The quality assurance requirements described in this Standard QA Plan are intended to promote public safety and welfare by standardizing inspections, tests, and all other applicable measures that ensure substantial compliance with the code performance objectives of steel moment frame connections.

II. HOW TO USE THIS STANDARD QA PLAN

To use the Standard QA Plan, follow the steps outlined below:

1. *Standard QA Plan shall be attached to or incorporated in the structural plan.*
2. *Where the Standard QA Plan is attached to the structural plan, the Engineer of Record shall:*
   a. *Identify the type of steel moment frame to be used in the building or structure by placing an "X" mark in the box below:*

      SPECIAL MOMENT FRAME (SMF)

      INTERMEDIATE MOMENT FRAME (IMF)

      ORDINARY MOMENT FRAME (OMF)

   b. *Place a NOTE on the structural plan stating "All specifications, tables, and notes in the City of Los Angeles' Standard Quality Assurance Plan for Steel Moment Frames shall be part of this approved structural plan."*
   c. *Sign and stamp the Standard QA Plan in the box provided at the lower right corner of each sheet.*
3. *Where the Standard QA Plan is incorporated directly in the structural plan, the Engineer of Record shall place a NOTE on the structural plan to clearly indicate the type of steel moment frame to be used in the building or structure.*
4. *All of the quality assurance requirements listed in the Standard QA Plan shall be applied to special moment frames, intermediate moment frames, and ordinary moment frames, unless noted otherwise herein.*
5. *Organize and submit all reports required in Table 1 on Sheet 2 to the City Building Inspector in a timely manner for review and approval.*
6. *The procedures, specifications and illustrative details as described in the Standard QA Plan shall not exempt the Engineer of Record from using engineering judgment in determining the suitability of applying the Standard QA Plan to any welded connections. Any deviations in the quality assurance requirement as specified in the Standard QA Plan shall comply with Part III Item 5 of the Standard QA Plan.*

III. GENERAL REQUIREMENTS

1. Referenced Documents

The design and construction of steel moment frames shall be in compliance with the following:

a. City of Los Angeles Building Code, 2017 Edition (hereinafter referred to as "LABC").
b. AISC Seismic Provisions for Structural Steel Buildings, Part I dated June 22, 2010 (hereinafter referred to as "AISC Seismic").
c. AWS D1.1/D1.1M:2010 and AWS D1.8/D1.8M:2009 Structural Welding Code - Steel (hereinafter referred to as "AWS").

2. Material Specifications

a. Structural steel shall comply with the following ASTM standard specifications:
   i. Wide flange shapes.....ASTM A36, A529(50), A572(42)(50), A588, A913(50), A992 (50)
      note: minimum yield stress shall not exceed 50 ksi, except column per AISC 341 sec 6.1
   ii. Continuity, doubler and column base plates, shear tabs....i above or ASTM A283/A283M Grade D
   iii. Anchor rods at column base plates..ASTM F1554 or per AISC360-10 A4
   iv. Fabricate and erect structural steel in compliance with the AISC 360-10 "Specification for Structural Steel buildings" (hereinafter referred to as "AISC Specification") .
   v. Steel having dual ASTM designation shall be clearly identified on each specific plan detail.
b. High strength bolts shall comply with the following requirements and ASTM standard specifications:
   i. High strength bolts, nuts, and washers.....ASTM A325, A490
   ii. Installed bolts in accordance with the "Specifications for Structural Joints using ASTM A325 or A490 Bolts."
   iii. Tighten bolts to a snug tight condition then further tighten to the minimum specified tension and verify using a calibrated tension measuring device, Twist-Off and Direct-Tension Indicator methods shall also be permitted
   iv. Slip critical high strength bolts are required.
   v. All faying surfaces of connections with high strength fasteners shall be prepared as required for Class A per the AISC Seismic Section 7.2.
c. Filler metal properties and specifications shall be as follows:
   i. Electrodes shall be of a low-hydrogen type meeting requirement of H-16 as tested in accordance with AWS A4.3 and conforming to AWS specifications as referenced in Table 7 on Sheet 2.
   ii. Filler metals shall be classified for nominal 70 ksi tensile strength.
   iii. The maximum permitted electrode diameter shall be in accordance with Table 5 on Sheet 2.
   iv. Filler metals shall have a minimum Charpy V-Notch (CVN) toughness of 20 ft-lbf at 0°F using AWS A5 classification test methods.
   v. The use of intermixed welds shall not occur unless it can be demonstrated by testing in accordance with AWS Section 4.
   vi. The parameters established by the electrode manufacturer shall be reflected in the approved WPS.
d. Other materials not listed in LABC Chapter 35 are not permitted without specific approval from the Department.

3. Welding Processes

Structural welding shall be limited to the Shielded Metal Arc Welding or Flux Cored Arc Welding processes.

4. Base Metal Repairs or Restorations

Any repair or restoration of base metal shall comply with all of the following:

a. Engineer of Record shall review and approve the WPS for repair procedures prior to welding.
b. Ensure that repair procedures meet the requirements outlined in AWS Section 5.26 and ASTM A6/A6M-02 Section 9.2, 9.3, 9.4 and 9.5.
c. All welding shall be performed using low-hydrogen electrodes or with SMAW using low-hydrogen electrodes.
d. Provide continuous visual inspection by the Deputy Inspector.
e. Provide non-destructive testing upon completion of the repair work.

5. Deviations From the Standard Quality Assurance Plan

Deviations from any part of the Standard QA Plan may be made provided the procedures outlined below are followed:

a. Deviations from the Standard QA Plan must be reviewed and approved by the Engineer of Record.
b. Engineer of Record shall provide alternate procedures, specifications, and/or details to justify the deviations.
c. Submit the proposed deviations from the Standard QA Plan to the Department for review and approval prior to commencement of work.
d. Supplemental testing and additional specifications may be required to justify the deviation.
e. Conformance with all applicable provisions of the LABC, AISC, and AWS is required.

IV. QUALITY ASSURANCE

1. Certification

a. Inspectors shall be LADBS Certified Deputy Inspectors per LABC Section 1704.2 and Information Bulletin P/BC 2011-035 "Regulations Regarding Registration for Deputy and Controlled Activities Inspection." Employment shall be in accordance with Information Bulletin P/BC 2014-034 "Employment and Duties of a Registered Deputy Inspector."
b. Welders shall be LADBS Certified Welders for the Structural Steel classification per LABC Section 2204.1, and Information Bulletin P/BC 2014-045 "Welder Certification Rules and Regulations."
c. Shop welds shall be performed in an LADBS Certified Fabricator's Shop per LAMC Section 96.204(g) and Information Bulletin P/BC 2014-042 "Application for Approval as Fabricator."
d. Technicians performing Non Destructive Testing (NDT) shall be certified for Level II in accordance with ASNT SNT-TC-1A (current edition) by a Testing Agency approved per LAMC Section 98.0503 and Information Bulletin P/GI 2017-028 "Rules and regulations for Recognition of Testing Agencies."

2. Pre-Construction Meeting

a. The Owner (or owner's representative) shall arrange a pre-construction meeting(s) with the Engineer of Record (or Structural Observer designated by the Engineer of Record), the Contractor (or affected Sub-Contractor), and the Deputy Inspector to discuss and review welding procedures, bolting procedures, and inspection requirements for all welding and bolting operations with consideration to minimize welding shrinkage effects including number of welders per deputy inspector
b. The City Building Inspector shall be notified of such meeting(s) and may participate at his/her discretion.
c. Meeting record(s) shall be included in the first report submitted to the City Building Inspector.

3. Structural Observation

Structural observation shall be performed in accordance with Information Bulletin P/BC 2017-024. The Structural Observer shall:

a. Perform structural observation listed in Table 6 on Sheet 2.
b. Perform structural observation prior to placement of decking, covering by fireproofing, encasement in concrete or placement of other finishes.
c. Submit observation report(s) to the City Building Inspector at each stage observed and upon completion of the structural system.
d. State in the report that the steel moment frame system substantially conforms with the approved structural plans and specifications.
e. Use the Department's Structural Observation Report Form to report all observations. Structural Observation Report Form can be obtained at www.ladbs.org, keyword "Information Bulletin P/BC 2017-024".

4. Deputy Inspection

The following are the basic Quality Assurance responsibilities of the Deputy Inspectors:

a. Arrive on the job in sufficient time to verify the permit information, check for prior inspections and/or approvals by the City Building Inspector or previous Deputy Inspectors, check the quality of all materials and become familiar with the approved structural plans and specifications.
b. Verify that structural steel delivered is from a fabricator currently licensed by the Department.
c. Identify material from an offsite fabricator in accordance with LABC Section 2203 and compare to the approved plans and specifications.
d. Verify that each steel piece is labeled with the approved fabricator's shop name and license number.
e. Visual check shop welds and/or non-destructive test, as required, joint preparation, faying surfaces, indentation stamps and color codes of high strength steel, excessive mill scale or lamination, and dimensional conformity with the approved plans which are part of the lateral resisting system.
f. Before any welding begins, inspect joint preparation, fit-up, condition of surfaces to be welded, storage and use of electrodes, current license of all welders, and voltage/amperage of welding machines.
g. Ensure that all welding and inspection activities complies with AWS.
h. Measure voltage/amperages near the arc with a hand held calibrated averaging type meter. The meter shall be calibrated not less than once a year. This equipment shall be used by the Fabricator, Erector, and Deputy Inspector.
i. During welding operation, provide continuous inspection particularly on multiple pass welds to assure that each pass has been prepared correctly, preheat and interpass temperatures are maintained and that finished welds shall be the correct size and without rejectable discontinuities.
j. Mark steel near the weldment to indicate that inspection was made.
k. Verify type and size of bolts and washers, check mill certificates, and verify faying surfaces are free of burrs, scale, rust, grease or anything that may inhibit full contact.
l. Verify connections involving high strength bolts and welds are fabricated per Part III Item 2(b) and 2(c) and erected in a sequence per Part V Item 2, unless specified otherwise by the Engineer of Record.
m. Verify high strength bolts are not welded or damaged by preheating.
n. Verify washers are always installed with all bolts, except A-490 bolts which require washers under both elements.
o. Verify that any deficiency noted in the Structural Observation Report Form has been corrected.
p. Verify that the Engineer of Record has approved the written Welding Procedure Specification (WPS) prepared by the Fabricator or Erector. The WPS shall include the following:
   i. All applicable requirements from the codes, the Standard QA Plan, and any other information necessary to produce the welds.
   ii. List the applicable base metal types and thicknesses.
   iii. List the welding joint detail, including joint type, weld type, joint geometry, and applicable dimensions. Individual weld passes shall be identified in sketches and numbered to identify the sequence of their deposition (see Detail 13 on Sheet 3 for example). The sketches shall identify the maximum layer thicknesses and bead widths. In no case shall layer thicknesses exceed 1/4 inch nor shall the maximum bead widths exceed 5/8 inch.
   iv. List the welding processes.
   v. Specify the required welding positions.
   vi. List the filler metal per AWS for electrode specification and classification (see Table 7 on Sheet 2), as well as information regarding shielding material to be used.
   vii. Indicate the minimum preheat and interpass temperatures (see Table 4 on Sheet 2) and post weld heat treatment per Part V Item 5.
   viii. List all applicable electrical characteristics for the welding process employed. WPS shall clearly indicate the specific values required for each welding pass. These electrical characteristics shall include at minimum the following:
      (1) Electrode diameter (see Table 5 on Sheet 2),
      (2) Type of current, and acceptable ranges of current measured in amperage,
      (3) Voltage,
      (4) Travel speed (range), and
      (5) Amperage, voltage and electrode extension (as applicable) shall be within the filler metal manufacturer's recommendations.
   ix. A copy of the electrode manufacturer's technical information with ID # listed shall be attached to the WPS .
q. Weld joints not conforming to AWS Chapter 3 must be tested by an approved testing agency, accepted by the Engineer of Record, and approved by the Department's Material Control Section before the weld is performed. Material Control Section can be contacted at:
   LADBS Material Control Section
   221 N. Figueroa St., Suite 400
   Los Angeles, CA 90012
   (213) 482-0385 or 1-888-LA-4BUILD
r. Notify the Contractor, Engineer of Record, and City Building Inspector of any deviations or non-compliance with the approved WPS, plans or specifications.
s. "Deputy Inspection Report Form IN.FORM07" shall be submitted on a weekly basis to the City Building Inspector and Engineer of Record, unless determined otherwise by the City Building Inspector.
t. During the execution of the work, the Deputy Inspector shall not undertake or engage in any other task or occupation which will interfere with the proper performance of the duties of such inspection.
w. Visual welding inspections, bolting inspections and other inspections shall be conducted at locations and frequencies as specified in Table 8 on sheet 2 of 3.

5. Electrode Storage and Atmospheric Exposure

a. Electrodes are considered to be exposed to the atmoshpere if:
   i. the manufacturer's sealed electrode containers or packagings are opened or damaged, or
   ii. outside of baking or storage ovens.
b. Modification or lubrication of electrodes are not permitted.
c. Drying of electrodes in baking or storage ovens are permitted as recommended by the manufacturer.
d. Electrodes shall be identified to facilitate monitoring of total atmospheric exposure time.
e. Storage and atmospheric exposure of AWS A5.1-91 and A5.5-96 low-hydrogen SMAW electrodes shall be in accordance with AWS Section 5.3.2.
f. FCAW electrodes not consumed within 24 hrs of accumulated atmospheric exposure time shall not be used. Manufacturer's recommendations that show that drying effectively removes moisture and restores electrodes to their designated diffusible hydrogen levels are permitted.
g. FCAW electrode welding suspended more than 8 hrs shall be removed from the machines and stored in an electrode wire baking or storage oven maintained at a temperature between 250° and 550°F, or as recommended by the electrode manufacturer.

6. Plastic Hinging Zone Protection

a. The plastic hinging zone shall be identified diagrammatically, as illustrated in Detail 15 on Sheet 3, on the structural plans by the Engineer of Record.
b. The Engineer of Record and Contractor shall be responsible for reviewing shop drawings of ALL relevant trades to ensure compliance. This shall be discussed and documented in pre-construction meetings.
c. The Contractor shall be responsible for developing a program to ensure that all workers on the project, including their subcontractors, are aware of and understand this requirement. Failure to comply with these requirements may cause the replacement of steel.
d. Plastic hinging zones shall be defined by permanent markings such as paint or ink.
e. A note, as illustrated in Detail 15 on Sheet 3, shall be prominently placed on the structural plans (general note sheet and adjacent to moment frame detail) and the construction documents of ALL trades.
f. Welded, bolted, screwed, or shot-in (powder driven) attachments for perimeter edge angles, shear studs, exterior facades, partitions, duct work, piping, or other connections shall not be permitted within the plastic hinging zones.
g. Any penetrations or damage from temporary welded attachments within the plastic hinging zones shall be repaired as required by the Engineer of Record and comply with Part III Item 4.
h. Initially, the plastic hinging zone "Warning Sign", as illustrated in Detail15 on Sheet 3, may be temporary. However, the temporary "Warning Sign" shall be replaced by a permanent "Warning Sign" before project completion. This sign and identification of the plastic hinging zone shall be maintained during construction; and may require repair after operations such as fireproofing.
i. Signs shall be affixed to the beam and located within the plastic hinging zone. The City Building Inspector may accept alternate methods of attaching the "Warning Sign" to the plastic hinging zones.

7. Additional Charpy V-Notch Toughness

a. Demand Crital Welds

For steel frame with service temperature at 50°F or higher welds at the locations indicated below shall be made with filler metal having a CVN toughness of 20 ft-lbf at -20°F AND 40 ft-lbf at 70°F as determined by test procedure prescribed in the AISC Seismic Sec.9.1-5 "Weld Metal / Welding Procedure Specification Toughness Verification Test."

For steel with service temperature below 50°F , the qualification temperature for AISC Seismic Provision Appendix X shall be 20°F above the lowest anticipated service temperature or at a lower temperature.

   i. Beam flanges to columns,
   ii. Single plate shear connections to columns,
   iii. Beam webs to columns, and
   iv. Column splices.
   v. Column bases

b. Heavy Section CVN Requirements

For structural steel in the SLRS, in addition to the requirements of AISC Specification Section A,3,1c, hot rolled shapes with flanges 1½ in. thick and thicker shall have a min. CVN toughness of 20 ft-lb at 70°F, tested in the alternate core location as described in ASTM A6 Supplemental Requirement S30. Plates 2 in. thick and thicker shall have min. CVN toughness of 20 ft-lb at 70°F, measured at any location permitted by ASTM A673, where the plate is used in the following:

   i. Member built-up from plate
   ii. Connection plates where inelastic strain under seismic loading is expected.

8. Non-Destructive Testing (NDT) Requirements

The following NDT requirements, which shall be considered as a minimum, are to be included in the Quality Assurance Agency Document(s)(see part 1, IV 9 below)

a. The minimum non-destructive testing at each weld joints or parts shall be conducted at the locations and frequencies as specified in Table 2 and Table 3 on Sheet 2 respectively.
b. A copy of each NDT report shall be provided to the Contractor, Engineer of Record, Deputy Inspector, and City Building Inspector with the following information:
   i. Document the accepted and rejected welds, parts, or joints.
   ii. Identify the tested weld by piece mark and location in the piece.
   iii. Identify the tested weld location in the structure.
c. NDT Technician shall perform the following tasks:
   i. Coordinate the NDT scope and schedule with the Deputy Inspector.
   ii. Perform NDT in a timely manner (so as not to hinder construction work) and to detect welding problems soon after occurrence so that corrective measures can be taken by the Contractor.
   iii. Mark the inspected and accepted welds, parts, and joints with a distingquishing mark or die stamp.
d. Reduction Rate for NDT
   i. The rate of UT testing on CJP groove welds may be reduced if approved by the Engineer of Record and the Department, except no reduction is permitted for demand critical welds. Where the initial rate for UT is 100%, the NDT rate for an individual welder or welding operator is permitted to be reduced to 25%, provided the reject rate, the number of welds containing unacceptable defects divided by the number of welds completed, is demonstrated to be 5% or less of the welds tested for the welder or welding operator. A sampling of at least 40 completed welds for a job shall be made for such reduction evaluation. For evaluating the reject rate of continuous welds over 3 ft in length where the effective throat is 1 in. or less, each 12 in. increment or fraction thereof shall be considered as one weld. For evaluating the reject rate on continuous welds over 3 ft in length where the effective throat is greater than 1 in., each 6 in. of length or fraction thereof shall be considered one weld.
   ii. The rate of MT testing on CJP groove welds may be reduced if approved by the Engineer of Record and the Department. The MT rate for an individual welder or welding operator may be reduced to 10%, provided the reject rate is demonstrated to be 5% or less of the welds tested for the welder or welding operator. A sampling of at least 20 completed welds for a job shall be made for such a reduction evaluation. This reduction is not permitted on welds in the k-area, at repair sites, weld tab and backing removal sites and access holes.
   iii. Reject rate shall mean the number of welds containing rejectable defects divided by the number of welds completed.

9. Quality Assurance Agency Documentations

   i. Submit Fabricator and Erector Document for review by EOR prior to fabrication erection per AISC 341-10 Sec J2.
   ii. Submit Quality Assurance Agency Document to EOR, owner, and City Building Inspector per AISC 341-10 Sec J3.
   iii. The reports listed in Table 1 on Sheet 2 shall be submitted to the City Building Inspector in a timely manner.
   iv. The requirements stated in Section 8 are to be included in the Quality Assurance Agency Document(s)

V. WELDING PROCEDURES

1. Bottom Beam Flange Moment Connection Welding

Where welding of the bottom beam flange to the column flange is in the flat welding position, welding shall be completed with the following sequence:

a. Start welding from Side A (one side of the beam) with a maximum 1/4 inch thick root pass beyond the center of the joint on Side B (other side of the beam), reaching past the beam web through the weld access hole.
b. After the arc is initiated, electrode travel shall progress toward the edge of the Side A beam flange, terminating on the Side A weld tab.
c. The SideA root pass, and root pass deposit on SideB, shall be thoroughly cleaned to allow Deputy Inspector to verify the resulting bead profile is suitable for obtaining good fusion by the subsequent root pass to be initiated from SideB. If the profile is not conducive to good fusion, the start of the first root pass shall be gounded,gouged,chipped,orotherwise prepared to ensure adequate profile to achieve fusion.
d. Complete the root pass on Side B before any other weld passes are performed.
e. The arc shall be initiated at the start of the first Side A root pass, and electrode travel shall progress toward the edge of the Side B beam flange, terminating on the Side B weld tab.
f. The above sequence shall be repeated for subsequent weld layers, and each weld layer shall be completed on both sides of the joint before a new layer is deposited,For each layer, the weld starts and stops shall be on opposite side of beam web,as compare to previous layer. The order of operations (Side A, then Side B, or vice versa) is not restricted and may vary for each weld layer. Weld passes shall be placed in horizontal layers. Each pass shall be thoroughly cleaned of slag and wire brushed. Each pass shall be visually inspected by the Deputy Inspector, as described above in Step (c). An alternate welding sequence may be made provided Contractor submits in writing analternate sequence that is approved by the Engineer of Record and complies with the requirements of Part III Item 5 of the Standard QA Plan.

2. Sequence for Welding at Multiple Locations

When welding occur at multiple locations of welded steel moment frame connections, the following sequence shall be followed:

a. Weld both top and bottom beam flanges prior to any supplemental welding to the beam web or shear tab.
b. Engineer of Record shall review and approve all field welding sequences prior to the start of work.
c. Field welding of web shear plates with bolts shall occur after field welding of beam flanges to column flange.
d. High strength bolts shall be in the snug tight condition prior to welding.
e. Notwithstanding AISC Steel Construction Manual Specification Section J1.10 to the contrary, high strength bolts shall be fully tensioned upon completion of all welding activities.

An alternate sequence of welding may be made provided the Contractor submits in writing, the alternate sequence minimizes residual stresses and is approved by the Engineer of Record.

3. Welding Technique

a. Stringer beads shall be used during all welding operations. Maximum bead width, bead thickness, and layer thickness shall be considered. Weaving is not permitted, except when the WPS approved by the Engineer of Record limits electrode oscillation transverse to the weld axis to a maximum of:
   i. 3d for 1G/1F, 2G/2F, and 4G/4F weld positions, or
   ii. 5d for the 3G/3f position, where d = electrode diameter.
b. Welding layers should progress from the face of the column flange outward toward the groove face of the beam flange as illustrated in Detail 13 on Sheet 3.

4. Preheat and Interpass Temperature

a. The minimum preheat and interpass temperature requirements in Table 4 of Sheet 2 shall be observed. Special attention shall be given to AWS Section 3.5.1 and Section 5.6 for the thickness of the base metal to be welded.
b. Preheat and all subsequent interpass temperatures shall be maintained during the welding operation for a distance at least equal to the thickness of the thicker welded part, but not less than 3", in all directions from the point of welding.
c. Where base metals are of different thickness, the higher minimum preheat and interpass temperature requirements of the thicker plate shall govern.
d. Maximum preheat and interpass temperature shall not exceed the lesser of:
   i. 550°F, or
   ii. The maximum temperature recommended by the manufacturer.

5. Post Weld Heat Treatment

Unless specified otherwise in an approved WPS, the minimum post weld heat treatment shall be provided as follows:

a. Apply temperature in the 400°F to 600°F range immediately after completion of welding to prevent the weld metal from cooling below the minimum preheat and interpass temperature.
b. Maintain temperature for approximately 1 hour per inch of thickness of weld metal or 2 hours, whichever is less.
c. Conditions specified in AWS Section 3.14 and Section 5.8 should carefully be considered when applying post weld heat treatment.

Alternatively, the use of insulating blankets after the completion of welding in lieu of post weld heat treatment may be permitted to control the cooling of the welded connection to ambient temperature if recommended by the Engineer of Record and approved by the City Building Inspector; unless required otherwise by an approved WPS.

VI. WELDING AND FABRICATION DETAILS

1. Base Metal Joint Preparation

a. Base metal preparation shall be in comply with AWS Section 5.15.
b. All beam flange to column flange welds are to be made with an AWS prequalified CJP groove welded joint detail.
c. Bevel, fit-up and detail tolerances shall be as required by the selected prequalified welded joint detail.
d. Whenever possible, use the AWS prequalified CJP groove welded joint detail as illustrated in Detail 14 on Sheet 3 and the following:
   i. Use single bevel CJP groove welds made with a 30° groove angle or double bevel CJP groove welds when flange thickness exceed 1-1/2 inch.
   ii. "As Fit-Up" and "As Detailed" shall be the maximum tolerances.
   iii. Meet all prequalified WPS variables in Table 5 on Sheet 2.

2. Weld Access Hole

a. Where weld access holes are provided, they shall be detailed as illustrated in Detail 12 on Sheet 3.
b. Notches and gouges shall be repaired following a WPS approved by ther Engineer of Record.
c. Weld access holes shall be prepared by grinding to a suitable finish in accordance with AISC Specification Section J1.6 and provided with a minimum radius of 3/8 inch as illustrated in Detail 12 on Sheet 3.

3. Backing Bar

a. Backing bar used in connections with a CJP groove weld of beam flange to column flange shall be removed except that top flange backing bar attached to the column by a continuous fillet weld on the edge below thee CJP groove weld need not be removed.
b. Following removal of backing bar, the root pass shall be backgouged to sound weld metal, and back welded. A reinforcing fillet weld with a minimum leg size of 5/16 inch or the root opening plus 1/16 inch, whichever is larger, shall be provided. The reinforcing fillet weld need not be grounded.

NOT FOR CONSTRUCTION

09.AUG.21

belzberg architects
2321 MAIN STREET
SANTA MONICA, CA 90405
310.453.9611
www.belzbergarchitects.com

ARUP
Arup North America Ltd.
900 Wilshire Boulevard,
19th Floor
Los Angeles CA 90017
Tel: 310 578 4400
www.arup.com

#	DESCRIPTION	DATE

MOMENT FRAME DETAILS - LADBS QUALITY ASSURANCE SHEET 1 OF 3

PROJECT NUMBER:

S005

8/10/2021 5:29:13 PM

CONTINUED FROM SHEET 1

c. When backing bar is other than AWS Table 3.1 and Section 5.2.2 approved base metal is used, the following shall apply:
   i. Ceramic, flux or glass tape may be used provided the manufacture's recommendations are followed.
   ii. When a non-metallic backing bar is used, the WPS and the Welder shall be qualified using the type of backing bar intended for welding.
   iii. Nonferrous metallic (e.g. copper) backing materials are not permitted.

1. Weld Tab
a. Weld tabs shall be aligned parallel to the joint preparation.
b. No weld dams are allowed.
c. Weld tabs shall extend beyond the edge of the joint a minimum distance equal to the part thickness, but not less than one inch nor exceed two inches.
d. Weld tab shall be removed upon completion of the welded joint as follows:
   i. No more than 1/8 inch beyond the edge of the joint shall remain, except at continuity plate where up to 1/4 inch is acceptable.
   ii. Edges of the weld tab shall be finished to a surface roughness value of 500 micro inch or better. Grinding to a flush condition is not required.
e. Gouges and notches are not permitted. The transitional slope of any area where gouges and notches have been removed shall not exceed 1:5.
f. Material removed by grinding that extends more than 1/16 inch below the surface of the base metal shall be filled with weld metal. The contour of the weld at the ends shall provide a smooth transition, free of notches and sharp corners.

5. Continuity Plate
a. Continuity plates shall be detailed as illustrated in Detail 11 on Sheet 3.
b. The weld attaching the continuity plate to the column flange shall be as follows:
   i. Use a CJP groove weld for the full length of the groove preparation.
   ii. When backing bars are omitted, the root shall be backgouged and back welded.
   iii. When backing bars are used and remain in place, backing bars shall be attached to the column flanges with a reinforcing fillet weld.
   iv. Fillet weld shall not be used to connect backing bars to continuity plates.
   v. The fillet weld size need not exceed the minimum size requirements of AWS Table 5.8.
c. Weld terminations near the end of the column flange tips may be completed using weld tabs as follows:
   i. Weld tabs may be steel or nonfusible material.
   ii. Weld terminations near the radius of the column need not be made using weld tabs. The use of small nonfusible weld tabs to assist in weld terminations is permitted.
   iii. Weld tabs shall be removed following completion of welding.
d. Continuity plates may be welded to the column web with groove welds, fillet welds, or a combination of the two. Fillet welds shall terminate a minimum distance of 1/4 inch from each end of the joint.

6. Doubler Plate
Web doubler plates, as illustrated in Detail 2, 3, or 4 on Sheet 3, shall be welded using either Detail 5, 6, or 7 on Sheet 3.

7. Requirements for "k" Area
Welds shall terminate short of the "k" area for continuity plates as illustrated in Detail 11 on Sheet 3.

8. Tack Welds
i. Tack welds attaching backing bars and weld tabs shall be placed where they will be incorperated into the final weld.
ii. Tack welds shall be subject to the same welding procedure requirements as thefinal welds including preheat requirements.
iii. Tack welds are fully inspected prior to install the final welds.

VII. EXEMPTIONS

1. Reduction from certain quality assurance components of this Standard QA Plan, as listed in Part VII Item 2, are permitted for the following buildings or structures:
   a. One or two family dwellings not more than 1 story in height and 2,500 sf of floor area,
   b. Buildings or structures accessory to residential uses (such as carport, storage, garage), and
   c. Miscellaneous structures (such as walkway, canopy, patio cover, gazebo, storage rack).

2. Buildings or structures, as listed in Part VII Item 1, are exempt from providing the following quality assurance components:
   a. Electrode Storage and Atmospheric Exposure, Part IV Item 5(f) and 5(g).
   b. Plastic Hinging Zone Protection, Part IV Item 6.
   c. Additional CVN Notch Toughness Testing, Part IV Item 7.
   d. Non-Destructive Testing, Part IV Item 8.
   e. Preheat and Interpass Temperature, Part V Item 4.
   f. Post Weld Heat Treatment, Part V Item 5.

NOTE : (Refer to AISC 341-10 Section J, "COPY RIGHT © Amerian Institute of Steel Construction. Reprint with permission. All right reserved")

The following entries are used in the tables:
- Observe (O) - The inspector shall observe these functions on a random, daily basis. Welding operations need not be delayed pending observations.
- Perform (P) - These inspections shall be performed prior to the final acceptance of the item. Where a task is noted to be performed by both OC and OA, it shall be permitted to coordinate the inspection function between QC and QA so that the inspection functions need be performed by only one party. Where QA is to rely upon inspection functions performed by QC, the approval of the engineer of record and the authority having jurisdiction is required.
- Document (D) - The inspector shall prepare reports indicating that the work has been performed in accordance with the contract documents. The report need not provide detailed measurements for joint fit-up, WPS settings, completed welds, or other individual items listed in the Tables of 8-a, 8-b, 8-c. For shop fabrication, the report shall indicate the piece mark of the piece inspected. For field work, the report shall indicate the reference gride lines and floor or elevation inspected. Work not in compliance with the contract documents and wether the noncompliance has been satisfactorily repaired shall be noted in the inspection report.

Table 8-a Location and Frequencies of bolting inspections

Inspection Tasks Prior to Bolting	QC Task	QC Doc.	QA Task	QA Doc.
Proper bolt selected for the joint detail	O	-	O	-
Proper bolting procedure selected for joint detail	O	-	O	-
Connecting elements are fabricated properly, including the appropriate faying surface condition and hole preparation, if specified, meets appliable requirements	O	-	O	-
Pre-installation verification testing conducted for fastener assemblies and method used.	P	D	O	D
Proper storage provided for bolts, nuts, washers, and other fastener components.	O	-	O	-
Inspection Tasks During Bolting	**QC Task**	**QC Doc.**	**QA Task**	**QA Doc.**
Fastener assemblies placed in all holes and washers (if required) are properly positioned	O	-	O	-
Joint bought to a snug tight condition prior to pretensioning operation	O	-	O	-
Fastener component not turned by the wrench prevented from rotating	O	-	O	-
Bolts are pretensioned progressing systematically from most rigid point toward free edges	O	-	O	-
Inspection Tasks After Bolting	**QC Task**	**QC Doc.**	**QA Task**	**QA Doc.**
Document accepted and rejected connections	P	D	P	D

Table 8-b Location and Frequencies of welding inspections

Visual Inspection Tasks Before Welding	QC Task	QC Doc.	QA Task	QA Doc.
Material Identification (Type/Grade)	O	-	O	-
Welder identification system	O	-	O	-
Fit-up of Grove Welds (including joint geometry) - Joint preparation - Dimensions (alignment, root opening, root face, bevel) - Cleanliness (condition of steel surface) - Tacking (tack weld quality and location) - Backing type and fit (if applicable)	P/O**	-	O	-
Configuration and finish of access holes	O	-	O	-
Fit-up of fillet welds - Dimensions (alignment, gaps at root) - Cleanliness (condition of steel surfaces) - Tacking (tack weld quality and location)	P/O**		O	

** Following performance of this inspection task for ten welds to be made by a given welder, with the welder demonstrating adequate understanding of the requirements and possession of skills and tools to verify these items, the Perform designation of this task shall be reduced to Oberve, and the welder shall perform this task. Should the inspector determine that the welder has discontinued adequate performance of this task, the task shall be returned Perform until such time as the inspector has reestablished adequate assurance that the welder will perform the inspection tasks listed.

Visual Inspection Tasks During Welding	QC Task	QC Doc.	QA Task	QA Doc.
WPS followed - Settings on welding equipment - Travel Speed - Selected welding materials - Shielding gas type/flow rate - Preheat applied - Interpass temperature manitained (min./max.) - Proper position (F,V,H,OH) - Intermix of filler metals avoided unless approved	O	-	O	-
Use of qualified welders	O	-	O	-
Control and handling of welding consumables - Packaging - Exposure control	O	-	O	-
Envirnoment conditions - Wind speed within limits - Precipitation and temperature	O	-	O	-
Welding techniques - Interpass and final cleaning - Each pass within profile limitations - Each pass meets quality requirements	O		O	
No welding over cracked tacks	O	-	O	-
Visual Inspection Tasks After Welding	**QC Task**	**QC Doc.**	**QA Task**	**QA Doc.**
Welds cleaned	O	-	O	-
Verify size, length, and location of welds	P	-	P	-
Visually inspect welds to acceptance criteria - Crack prohibition - Weld/base-metal fusion - Crater cross-section - Weld profiles - Weld size - Undercut - Porosity	P	D	P	D
Placement of reinforcing or contouring fillet welds (if required)	P	D	P	D
Backing removed, weld tabs removed and finished, and fillet welds added (if required)	P	D	P	D
Repair activities	P	-	P	D

Table 8-c Location and Frequencies of other inspections

Other Inspection Task	QC Task	QC Doc.	QA Task	QA Doc.
Reduced beam section (RBS) requirements, if appliable - contour and finish - dimensional tolerances	P	D	P	D
Protected zone - no holes and unapproved attachments made by fabricator or erector, as applicable	P	D	P	D

Table 5. PREQUALIFIED WPS REQUIREMENTS (1, 2, 3)

VARIABLE	POSITION OF WELD	WELD TYPE	SMAW	FCAW
Maximum Electrode Diameter	Flat (F)	Fillet (4)	5/16 in.	1/8 in.
		Groove (4)	1/4 in.	
		Root Pass	3/16 in.	
	Horizontal (H)	Fillet	1/4 in.	1/8 in.
		Groove	3/16 in.	
	Vertical (V)	All	3/16 in.	3/32 in.
	Overhead (OH)	All	3/16 in.	5/64 in.
Maximum Current	All	Fillet	Within the range of recommended operation by the filler metal manufacturer and a WPS approved by engineer of record.	Within the range of recommended operation by the filler metal manufacturer and a WPS approved by engineer of record.
	All	Groove weld root pass with opening		
		Groove weld root pass without opening		
		Groove weld fill passes		
		Groove weld cap pass		
Maximum Root Pass Thickness (5)	Flat (F)	All	3/8 in.	3/8 in.
	Horizontal (H)		5/16 in.	5/16 in.
	Vertical (V)		1/2 in.	1/2 in.
	Overhead (OH)		5/16 in.	5/16 in.
Maximum Fill Pass Thickness	All	All	3/16 in.	1/4 in.
Maximum Single Pass Fillet Weld Size (7)	Flat (F)	Fillet	3/8 in.	1/2 in.
	Horizontal (H)		5/16 in.	3/8 in.
	Vertical (V)		1/2 in.	1/2 in.
	Overhead (OH)		5/16 in.	5/16 in.
Maximum Single Pass Layer Width	All	Root opening >1/2 in.	Not applicable.	Split layers
		Any layer of width w		(6)

NOTES:
1. Applicable provisions of AWS D1.1/D1.1M:2010 Section 3 "Prequalification of WPSs" must be maintained for prequalified status of SMAW and FCAW WPSs.
2. Refer to Detail 13 on Sheet 3 for diagram of weld pass sequence.
3. Reproduced with permission from the American Welding Society (AWS), Miami, FL USA - AWS D1.1/D1.1M: 2010 Table Table 3.7 "Prequalified WPS Requirements".
4. Except root passes.
5. See AWS D1.1/D1.1M:2010, Section 3.7.2, for width-to-depth limitations.
6. In the F, H, or OH positions for nontubulars, split layers when the layer width w > 5/8 inch. In the V position for nontubulars or the F, H, V, OH positions for tubulars, split layers when the width w > 1 inch.
7. See AWS D1.1/D1.1M:2010 Sec. 3.7.3 for requirements for welding unpainted and exposed ASTM A588

Table 6. STRUCTURAL OBSERVATION CHECKLIST

STRUCTURAL OBSERVATION PROGRAM (Steel Moment Frame for Seismic Application)
☐ Orientation and placement of connected components.
☐ Removal of backing bars, as required on the plans.
☐ Removal of runoff tabs, as required on the plans.
☐ Presence of continuity plates, as required on the plans.
☐ Presence of doubler plates, as required on the plans.
☐ Configuration and finish of weld access holes, if applicable.
☐ Contour of RBS profile, if applicable.
☐ Verify that no welded attachments occur in the plastic hinging region.
☐ Review NDT and deputy inspection reports for general compliance.

NOTES:
1. Weld qualities shall be verified by the Deputy Inspector.
2. The structural observations listed in this Table are in addition to the structural observations that may be required on the structural plans.

Table 7. PREQUALIFIED BASE METAL - FILLER METAL COMBINATIONS FOR MATCHING STRENGTH (1, 2, 3, 4)

BASE METAL		FILLER METAL		
Group	Steel Specification	Welding Process	AWS Electrode Specification	Electrode Classification
I	ASTM A36 < 3/4 in. ASTM A53 (Grade B) ASTM A500 (Grade B or C) ASTM A 501	SMAW	A5.1	E70XX
			A5.5 (6)	E70XX-X
		FCAW	A5.20 (5)	E7XT-X, E7XT-XM
			A5.29 (6)	E7XTX-X, E7XTX-XM
II	ASTM A36 ≧ 3/4 in. ASTM A529 ASTM A572, A588 ASTM A913 ASTM A992, A1011HSLAS	SMAW	A5.1	E7015, E7016, E7018, E7028
			A5.5 (6)	E7015-X, E7016-X, E7018-X
		FCAW	A5.20 (5)	E7XT-X, E7XT-XM
			A5.29 (6)	E7XTX-X, E7XTX-XM
RELATIONSHIP	**BASE METAL(S)**		**FILLER METAL STRENGTH RELATIONSHIP REQUIRED**	
Matching	Any steel to itself or any steel to another in the same group		Any filler metal listed in the same group	
	Any steel in one group to any steel in another		Any filler metal listed for a lower strength group [SMAW electrodes shall be the low-hydrogen classification]	
Under-Matching	Any steel to any steel to any group			

NOTES:
1. The base metal/filler metal strength relationships above shall be used to determine whether matching or under-matching filler metals are required. Refer to AWS D1.1/D1.1M:2010, Section 3.3.
2. Preheating of joints involving base metals of different groups shall be in conformance with the requirements applicable to the higher strength group.
3. When welds are to be stress-relieved, the deposited weld metal shall not exceed 0.05 percent vanadium.
4. Reproduced with premission from the American Welding Welding Society (AWS), Miami, FL USA - AWS D1.1/D1.1M:2010 Table 3.1 "Prequalified Base Metals-Filler Metal Combinations for Matching Strength".
5. FCAW electrodes with the -2, -2M, -3, -10, -13, -14, -GS suffix shall be excluded and electrodes with the -11 suffix shall be excluded for thicknesses greater than 1/2 in.
6. Filler metals of alloy group B3, B3L, B4, B4L, B5, B5L, B6, B6L, B7, B7L, B8, B8L, B9 E9015-C5L, E9015-D1, E9018-D1, E9018-D3 or any BXH grade in AWS A5.5, A5.23, A5.28 or A5.29 are not prequalified for use in the as-weld condition.

Table 1. REPORTS TO BE SUBMITTED TO THE CITY BUILDING INSPECTOR

	PREPARED BY	TYPE OF REPORT
1.	Structural Observer(s)	Structural Observation Reports
2.	Deputy Inspector(s)	Deputy Inspection Reports
3.	NDT Technician(s)	Non-Destructive Testing Reports

Table 2. NON-DESTRUCTIVE TEST LOCATIONS

	REQUIRED LOCATIONS	Test Frequency
1.	**CJP Groove Weld** Ultrasonic test shall be performed on all CJP groove welds in materials 5/16 inch (8 mm) thick or greater. In addition, magnetic particle test shall be performed on all beam-to-column CJP groove welds.	A
2.	**"k" Area** When welding of doubler plates, continuity plates, or stiffeners has been performed in the k-area, the web shall be tested for cracks using magnetic particle testing. The magnetic particle test area shall include the k-area base metal within 3 in. (75 mm) of the weld.	B
3.	**Beam Cope and Access Hole** At welded splices and connections, thermally cut surfaces of beam copes and access holes shall be tested using magnetic particle testing, when flange thickness exceeds 1-1/2 in. for rolled and built-up shapes.	B
4.	**Reduced Beam Section Repair** Magnetic particle testing shall be performed on any weld and adjacent area of the RBS plastic hinge region that has been repaired by welding, or on the base metal of the RBS plastic hinge region if a sharp notch has been removed by grinding.	B
5.	**Base Metal Lamellar Tearing and Laminations at CJP Groove Weld** Base metal thicker than 1-1/2 in. (38 mm) shall be ultrasonically tested for discontinuities behind and adjacent to the fusion line when the base metal is loaded in tension in the through thickness direction in tee and corner joints and the connected material is greater than 3/4 in. (19 mm). Any base metal discontinuities found within t/4 of the steel surface shall be accepted or rejected on the basis of criteria of AWS D1.1 Table 6.2, where t is the thickness of the part subjected to the through-thickness strain.	A*
6.	**End of Weld at Weld Tab Removal Site** Magnetic particle testing shall be performed on the end of welds from which the weld tabs have been removed, except for continuity plate weld tabs.	B
7.	**PJP Groove Weld** Ultrasonic testing shall be performed on PJP groove welds used in column splices with an effective throat of 3/4 in. (19,1 mm) thick or greater.	B

NOTE: 1) A, and B are the frequencies of non-destructive tests listed in Table 3.
2) Non-destructive testing of welds shall be performed by quality assurance personnel
3) UT shall be performed according to procedures described in Appendix W Sec. W4.1 of AISC 341-10
4) MT shall be performed according to procedures described in Appendix W Sec. W4.2 of AISC 341-10
* Ultrasonic Test only

Table 3. NON-DESTRUCTIVE TEST FREQUENCY

	Frequency Designation A	Frequency Designation B
Ultrasonic Testing (UT)	100% of joints	0% of joints
Magnetic Particle Testing (MT)	25% of joints	100%of joints

NOTES:
1. Refer to Table 2 for locations of non-destructive testing.
2. Rate of non-destructive testing may be reduced as permitted in Sheet 1, Part IV, Item 8(d).
3. No reduction is permitted for demand critical welds for Ultrasonic Testing.
4. No reduction is permitted for welds in the k-area, at repair sites, backing removal sites, and access holes for Magnetic Particle Testing.

Table 4. PREQUALIFIED MINIMUM PREHEAT AND INTERPASS TEMPERATURE

STEEL SPECIFICATION	WELDING PROCESS	THICKNESS OF THICKEST PART AT POINT OF WELDING (in.)	MINIMUM PREHEAT AND INTERPASS TEMPERATURE (°F)
ASTM A36 ASTM A572 Grade 50 ASTM A913 Grade 50 ASTM A992	SMAW with low-hydrogen electrodes, FCAW	1/8 to 3/4 incl.	32
		Over 3/4 to 1-1/2 incl.	50
		Over 1-1/2 to 2-1/2 incl.	150
		Over 2-1/2	225

NOTES:
1. Surfaces to be welded and surfaces adjacent to welds shall be free of moisture pursuant to AWS D1.1/D1.1M:2010 Section 5.15. Use a higher preheat temperature from this Table to remove moisture.
2. Reproduced with permission from the American Welding Society (AWS), Miami, FL USA - AWS D1.1/D1.1M:2010 Table 3.2 "Prequalified Min. Preheat and Interpass Temperature",
3. The minimum preheat or interpass temperature applied to a joint composed of base metals with different minimum preheats (based on Category and thickness) shall be the highest of these minimum preheat temperatures.

NOT FOR CONSTRUCTION

09.AUG.21

belzberg architects
2321 MAIN STREET
SANTA MONICA, CA 90405
310.453.9611
www.belzbergarchitects.com

ARUP
Arup North America Ltd.
900 Wilshire Boulevard,
19th Floor
Los Angeles CA 90017
Tel: 310 578 4400
www.arup.com

#	DESCRIPTION	DATE

MOMENT FRAME DETAILS - LADBS QUALITY ASSURANCE SHEET 2 OF 3

PROJECT NUMBER:

S006

8/10/2021 5:29:13 PM

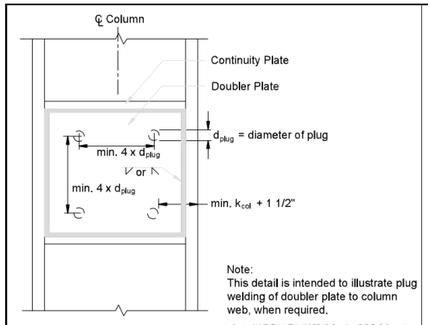

Note:
This detail is intended to illustrate plug welding of doubler plate to column web, when required.

(refer to AWS D1.1/D1.1M:2010 Section 2.3.5, 2.9, and 3.10 for minimum plug weld requirements)

Plug Welding of Doubler Plate to Column — Detail 16
Scale: Not to Scale

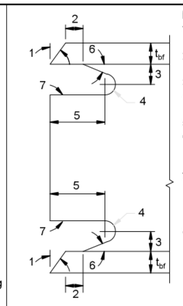

Notes:
1. Bevel as required by a selected AWS prequalified CJP groove welded joint detail.
2. Larger of t_{bf} or 1/2" (plus 1/2 t_{bf} , or minus 1/4 t_{bf}).
3. 3/4 t_{bf} to t_{bf}, 3/4" minimum (± 1/4").
4. 3/8" minimum radius (plus not limited, or minus 0).
5. 3 t_{bf}(±1/2").
6. Tolerances shall not accumulate to the extent that the angle of the access hole cut to the flange surface exceed 25°.
7. Weld access hole shall be ground smooth to a surface roughness value not to exceed 500 micro inch; and shall be free of notches and gouges.
8. This detail is required for FR (fully restrained) connection for OMF per AISC 341-10 seismic provisions sec. E1 where weld access holes are provided.

Alternative Weld Access Hole Detail — Detail 12
(Required per AISC 341-10 Sec E1, for OMF application, may use as alternative for RBS application per AISC 358-10 Sec 5.8/ CS.5)
Scale: Not to Scale

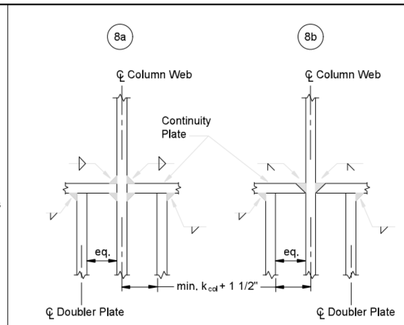

Doubler Plate Welds to Continuity Plate — Detail 8
Scale: Not to Scale

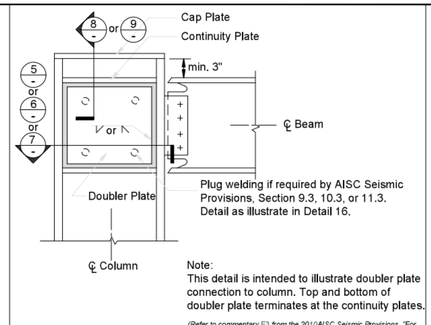

Note:
This detail is intended to illustrate doubler plate connection to column. Top and bottom of doubler plate terminates at the continuity plates.

(Refer to commentary E3 from the 2010AISC Seismic Provisions, "For Structural Steel Buildings")

Web Doubler Plate Detail — Detail 4
Scale: Not to Scale

TYPICAL SHEET 3 GENERAL NOTES:

1. The illustrative details provided herein are intended to highlight the minimum fabrication and welding details that should be reflected on the structural plan. It shall not be used as a substitute for or in lieu of structural details that the Engineer or Architect of Record must provide on the structural plan.
2. These illustrative details do not provide information such as, but not limited to, size of columns or beams, continuity or doubler plate thicknesses, size and length of the fillet welds, the type of beam to column moment connections, locations of all seismic demand welds, location od all required lateral braces, steel column frame to foundation connections, or length and location of plastic hinging zones. This information shall be determined by the Engineer or Architect of Record and specified on the structural plan.
3. Where the illustrative details provide information such as weld type to use at a particular weld joint, minimum or maximum dimensions for length, weld size, or gap between base metals, it should be appropriately reflected on the structural plan by the Engineer or Architect of Record.
4. Engineer of Record shall indicate on this plan which Weld Access Hole detail to be used. See Detail 12 and 17 of Sheet 3

Typical Sheet 3 Notes
Scale: Not to Scale

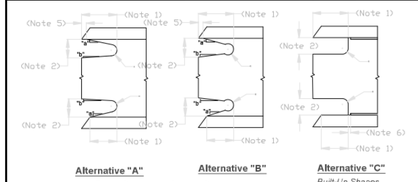

Notes: These are typical details for joints welded from one side against steel backing (tw=thickness of material in which the hole is made)
(1) Width: Greater of 1.5 x tw or 1½ in. Tolerance is +- 1/4 in.
(2) Height : Greater of 1.5 tw or 1 in. but need not exceed 2 in.
(3) R : ⅜ in. min. Grind the thermally cut surface of access holes in heavy shapes as defined in Section A.3.1c and A.3.1d (2010 AISC Seismic provisions). For heavy section as defined in A3.1c and A3.1d, the thermally cut surface of beam copes and weld access holes shall be ground to bright metal and inspected by either magnetic particle or dye penetrant methds prior to deposition of spice welds.
(4) Slope "a" forms a transition from the web to the flange. Slope "b" may be horizontal.
(5) The bottom of the top is to be contoured to permit the light fit of backing bars where they are to be used.
(6) The web-to-flange weld of built-up members is to be held back a distance of at least the weld size from the edge of the access hole.
(Refer to AISC 360-10 Specification for Structural Steel Buildings fig. C-J1.6, Weld Access Hole Geometry)

Weld Access Hole Detail — Detail 17
(Required per AISC 358-10 Sec 5.8/CS.5 for RBS application, may use detail 12 as alternative)
Scale: Not to Scale

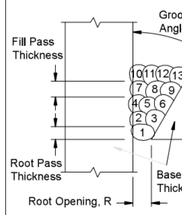

Notes:
1. For maximum fill pass thickness, see Table 5 on Sheet 2.
2. For moment connection at bottom beam flange to column flange, the maximum root pass thickness shall not exceed 1/4" per Part V, Item 1. For welded connection at all other locations, see Table 5 on Sheet 2 for maximum root pass thickness.
3. Root Opening, R, and Groove Angle, α, shall be per selected AWS prequalified CJP groove welded joint detail.
4. Welding pass numbers are shown diagrammatically to indicate sequence. Quantity of passes may vary due to depth and/or position of weld. This figure is intended to illustrate recommended welding sequence for FCAW and SMAW welding process only to reduce stresses due to weld skrinkage

Weld Pass Sequence — Detail 13
Scale: Not to Scale

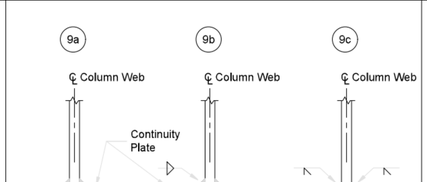

Doubler Plate Welds to Continuity Plate — Detail 9
Scale: Not to Scale

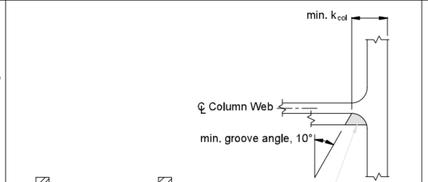

Note:
1. A square-edge plate and square groove weld between doubler plate and column is not permitted.
2. Double plate Fy shall have the same as the column Fy.

(Refer to Figure C-E3.3 from the 2010 AISC Seismic Provisions, "For Structural Steel Buildings")

Groove Welded Doubler Plate — Detail 5
Scale: Not to Scale

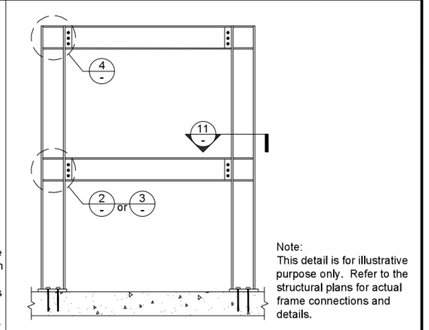

Note:
This detail is for illustrative purpose only. Refer to the structural plans for actual frame connections and details.

Sample Steel Moment Frame — Detail 1
Scale: Not to Scale

TOLERANCES	
As Detailed	As Fit-Up
R = +1/16, -0	+1/4, -1/16
α = +10°, -0°	+10°, -5°

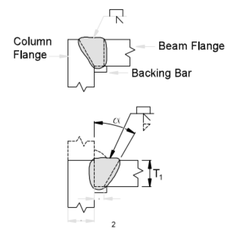

Welding Process	Joint Designation	Base Metal Thickness (U = unlimited) T_1	T_2	Groove Preparation: Root Opening	Groove Angle	Allowed Welding Positions	Gas Shielding for FCAW
SMAW	TC-U4a	U	U	R = 1/4	α = 45°	All	-
				R = 3/8	α = 30°	F, V, OH	-
FCAW	TC-U4a-GF	U	U	R = 3/16	α = 30°	All	Required
				R = 3/8	α = 30°	F	Not required
				R = 1/4	α = 45°	All	Not required

Notes:
1. Groove welds in corner and T-joints of cyclically loaded structures shall be reinforced with fillet welds equal to T_1 /4, but need not exceed 3/8 inch.
2. For corner joints, the outside groove preparation may be in either or both members, provided the basic groove configuration is not changed and adequate edge distance is maintained to support the welding operations without excessive edge melting.
3. Adapted with permission from the AWS D1.1 Committee on Structural Welding, Structural Welding Code - Steel, AWS D1.1/D1.1M: 2010 Miami: American Welding Society, Figure 3.4 pg. 95 (top left).

AWS Prequalified CJP Groove Welded Joint Detail — Detail 14
Scale: Not to Scale

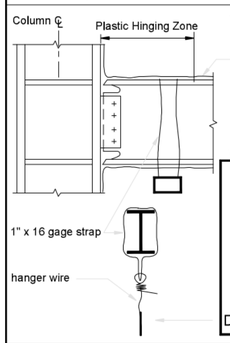

WARNING SIGN

"It is PROHIBITED to attach and to cause penetration or damage to the plastic hinging zones of steel moment-frames. These PROHIBITED conditions include bolts, holes, screws, shot pins, welds and tack welds (permanent or temporary). Failure to comply with these requirements may cause the replacement of steel."

DO NOT MOVE OR REMOVE THIS SIGN

Warning Sign at Plastic Hinging Zone — Detail 15
Scale: Not to Scale

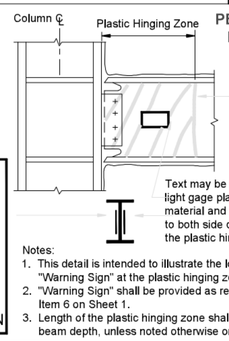

Notes:
1. This detail is intended to illustrate the location of the "Warning Sign" at the plastic hinging zone.
2. "Warning Sign" shall be provided as required by Part IV Item 6 on Sheet 1.
3. Length of the plastic hinging zone shall be a min. of 2 x beam depth, unless noted otherwise on the structural plans.

Doubler Plate Welds to Continuity Plate — Detail 10
Scale: Not to Scale

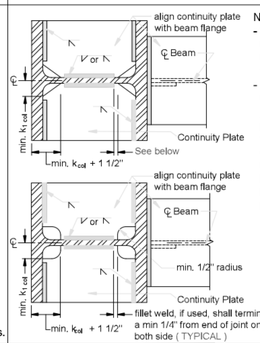

Note:
- Continuity plate shall have a thickness greater than or equal to the beam flange or beam flange connection plate.
- At the end of the weld adjacent to the column web/flange juncture, weld tabs for continuity plates shall not be used, except when permitted by the engineer of record. Unless specified by the engineer of record that they be removed, weld tabs shall not be removed when used in this location (AISC 341-10 sec D2)

Continuity Plate Detail — Detail 11
Scale: Not to Scale

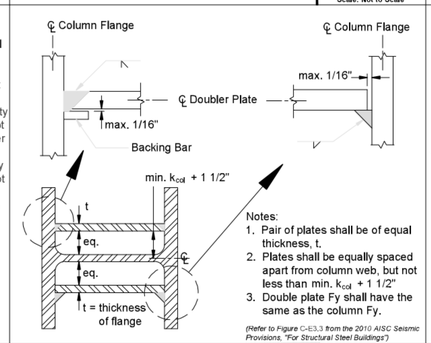

Notes:
1. Pair of plates shall be of equal thickness, t.
2. Plates shall be equally spaced apart from column web, but not less than min. k_{col} + 1 1/2"
3. Double plate Fy shall have the same as the column Fy.

(Refer to Figure C-E3.3 from the 2010 AISC Seismic Provisions, "For Structural Steel Buildings")

Fillet Welded Doubler Plate — Detail 6
Scale: Not to Scale

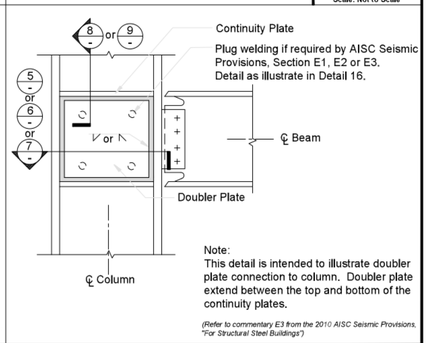

Note:
This detail is intended to illustrate doubler plate connection to column. Doubler plate extend between the top and bottom of the continuity plates.

(Refer to commentary E3 from the 2010 AISC Seismic Provisions, "For Structural Steel Buildings")

Groove or Fillet Welded Doubler Plate — Detail 7
Scale: Not to Scale

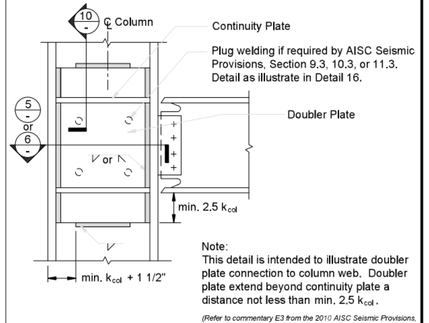

Note:
This detail is intended to illustrate doubler plate connection to column web. Doubler plate extend beyond continuity plate a distance not less than min. 2.5 k_{col} .

(Refer to commentary E3 from the 2010 AISC Seismic Provisions, "For Structural Steel Buildings")

Web Doubler Plate Detail — Detail 3
Scale: Not to Scale

NOT FOR CONSTRUCTION

09.AUG.21

belzberg architects
2321 MAIN STREET
SANTA MONICA, CA 90405
310.453.9611
www.belzbergarchitects.com

ARUP
Arup North America Ltd.
900 Wilshire Boulevard,
19th Floor
Los Angeles CA 90017
Tel: 310 578 4400
www.arup.com

#	DESCRIPTION	DATE

MOMENT FRAME DETAILS - LADBS QUALITY ASSURANCE SHEET 3 OF 3

PROJECT NUMBER:

S007

8/10/2021 5:23:14 PM

GENERAL NOTES FOR STRUCTURAL OBSERVATION

(1) Structural Observation is required for the structural system in accordance with the Information Bulletin No. P/BC 2017-024. Structural Observation is the visual observation at the construction site of the elements and connections of the structural system at significant construction stages, and the complete structure for general conformance to the approved plans and specifications. Structural Observation does not waive the responsibility for the inspections required of the building inspector or the deputy inspector.

(2) The owner shall employ a State of California registered civil or structural engineer or licensed architect to perform the Structural Observation. The Los Angeles Department of Building and Safety (LADBS) requires the use of the engineer or architect, or his/her designee responsible for the structural design who are independent of the contractor.

(3) The Structural Observer shall provide evidence of employment by the owner or the owner's representative. A letter from the owner, the owner's representative, or a copy of the agreement for services shall be sent to the building inspector before the first site visit.

(4) The owner or owner's representative shall coordinate and call for a meeting between the engineer or architect responsible for the structural design, Structural Observer, contractor, affected subcontractors and deputy inspectors. The purpose of the meeting shall be to identify the major structural elements and connections that affect the vertical and lateral load systems of the structure and to review scheduling of the required observations. A record of the meeting shall be included in the first observation report submitted to the building inspector.

(5) The Structural Observer shall perform site visits at those steps in the progress of the work that allow for correction of deficiencies without substantial effort or uncovering of the work involved. At a minimum, the listed significant construction stages on either the "Structural Observation/Significant Construction Stages' form or the "Structural Observation Program and Designation of the Structural Observer" form IN/Form.08 (Part 2) require a site visit and an observation report from the Structural Observer.

(6) The Structural Observer shall prepare a report of the "Structural Observation Report Form" IN/Form.08 (Part 1) for each significant stage of construction observed. The original of the Structural Observation report shall be sent to the building inspector's office and shall be signed and sealed (**wet stamp**) by the responsible Structural Observer. One copy of the observation report shall be attached to the approved plans. The copy attached to the plans shall be signed and sealed **(wet stamp**) by the responsible Structural Observer or their designee. Copies of the report shall also be given to the owner, contractor, and deputy inspector. Any deficiency noted on the observation report will become the responsibility of the structural engineer or architect of record to verify its completion by the Structural Observer.

(7) A final observation report must be submitted which shows that all observed deficiencies were resolved and structural system generally conforms with the approved plans and specifications. The Los Angeles Department of Building and Safety (LADBS) will not accept the structural work without the final observation report and the correction of specific deficiencies noted during normal building inspection.

As a covered entity under Title II of the Americans with Disabilities Act, the City of Los Angeles does not discriminate on the basis of disability and, upon request, will provide reasonable accommodation to ensure equal access to its programs, services and activities.

P/BC 2017-024

(8) The Structural Observer shall provide the original stamped and signed "Structural Observation Report Form" to the City of Los Angeles Department of Building and Safety Building Inspector.

(9) When there is a need to replace the Structural Observer of record, the owner shall:

a) Notify the building inspector in writing before the next inspection by submitting completed "Structural Observation Program and Designation of the Structural Observer" form IN/Form.08 (Part 2).
b) Call an additional preconstruction meeting, and
c) Furnish the replacement Structural Observer with a copy of all previous observation reports.
d) The new Structural Observer must be designated by the engineer or architect of record.

The replacement Structural Observer shall approve the correction of the original observed deficiencies unless otherwise approved by plan check supervision. The policy of the Department shall be to correct any properly noted deficiencies without consideration of their source.

(10) The engineer or architect of record shall develop all changes relating to the structural systems. The building department shall review and approve all changes to the approved plans and specifications.

As a covered entity under Title II of the Americans with Disabilities Act, the City of Los Angeles does not discriminate on the basis of disability and, upon request, will provide reasonable accommodation to ensure equal access to its programs, services and activities.

NOT FOR CONSTRUCTION

09.AUG.21

ba
belzberg architects
2321 MAIN STREET
SANTA MONICA, CA 90405
310.453.9611

www.belzbergarchitects.com

ARUP
Arup North America Ltd.
900 Wilshire Boulevard,
19th Floor
Los Angeles CA 90017
Tel: 310 578 4400
www.arup.com

#	DESCRIPTION	DATE

STRUCTURAL OBSERVATION REQUIREMENTS

PROJECT NUMBER:

S008

8/10/2021 5:29:15 PM

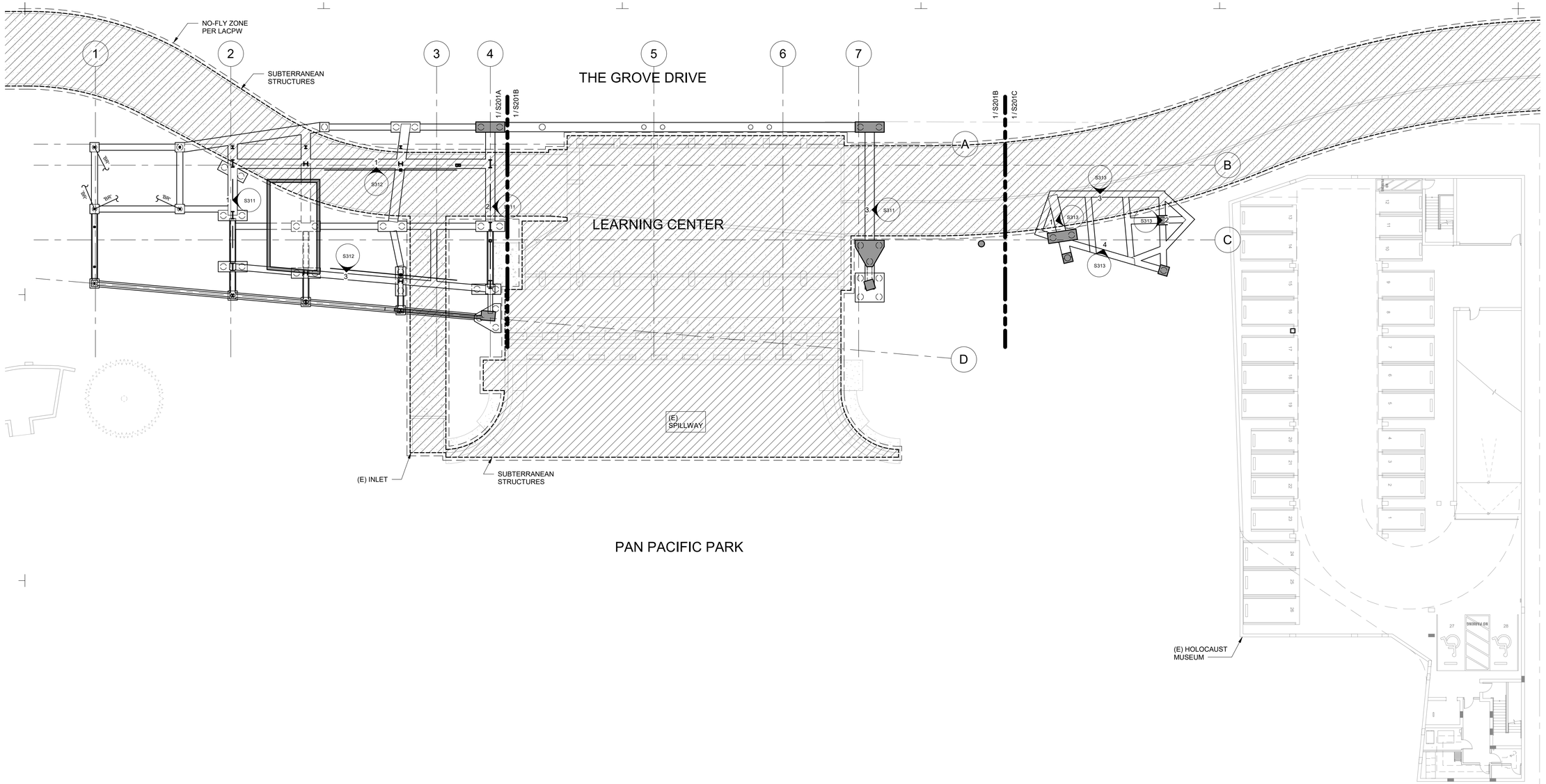

PAN PACIFIC PARK

NOT FOR CONSTRUCTION

09.AUG.21

belzberg architects
2321 MAIN STREET
SANTA MONICA, CA 90405
310.453.9611
www.belzbergarchitects.com

ARUP
Arup North America Ltd.
900 Wilshire Boulevard,
19th Floor
Los Angeles CA 90017
Tel: 310 578 4400
www.arup.com

#	DESCRIPTION	DATE

OVERALL
FOUNDATION PLAN

PROJECT NUMBER:

S201

8/10/2021 5:29:16 PM

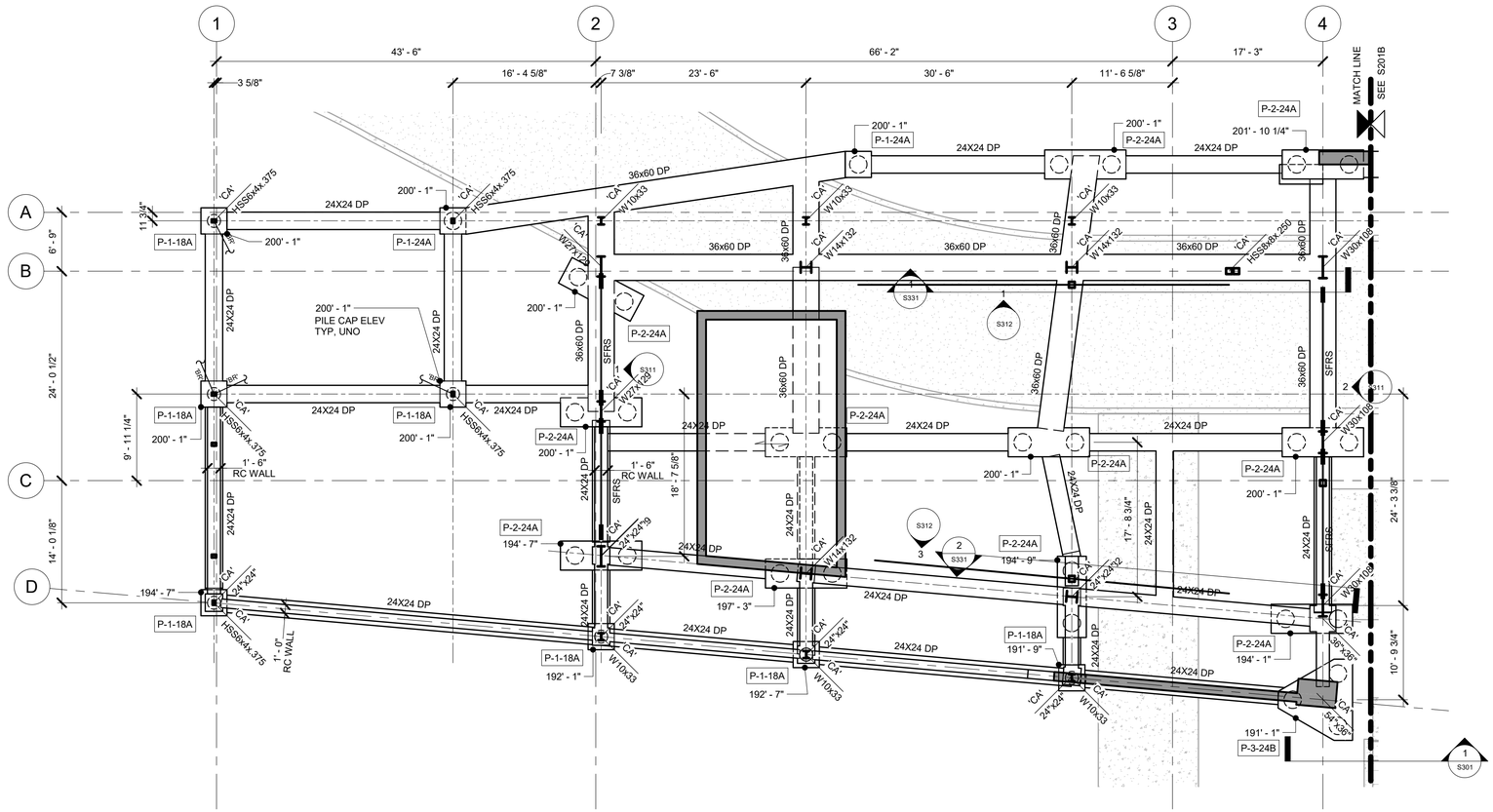

1 FOUNDATION PLAN - SOUTH

1/8" = 1'-0"

NOTES:

1. REFER TO 1/S611 FOR PILE CAP SCHEDULE.

NOT FOR CONSTRUCTION

09.AUG.21

ba
belzberg architects
2321 MAIN STREET
SANTA MONICA, CA 90405
310.453.9611
www.belzbergarchitects.com

ARUP
Arup North America Ltd.
900 Wilshire Boulevard,
19th Floor
Los Angeles CA 90017
Tel: 310 578 4400
www.arup.com

#	DESCRIPTION	DATE

LEARNING CENTER
FOUNDATION PLAN - SOUTH

PROJECT NUMBER:

S201A

8/10/2021 5:29:19 PM

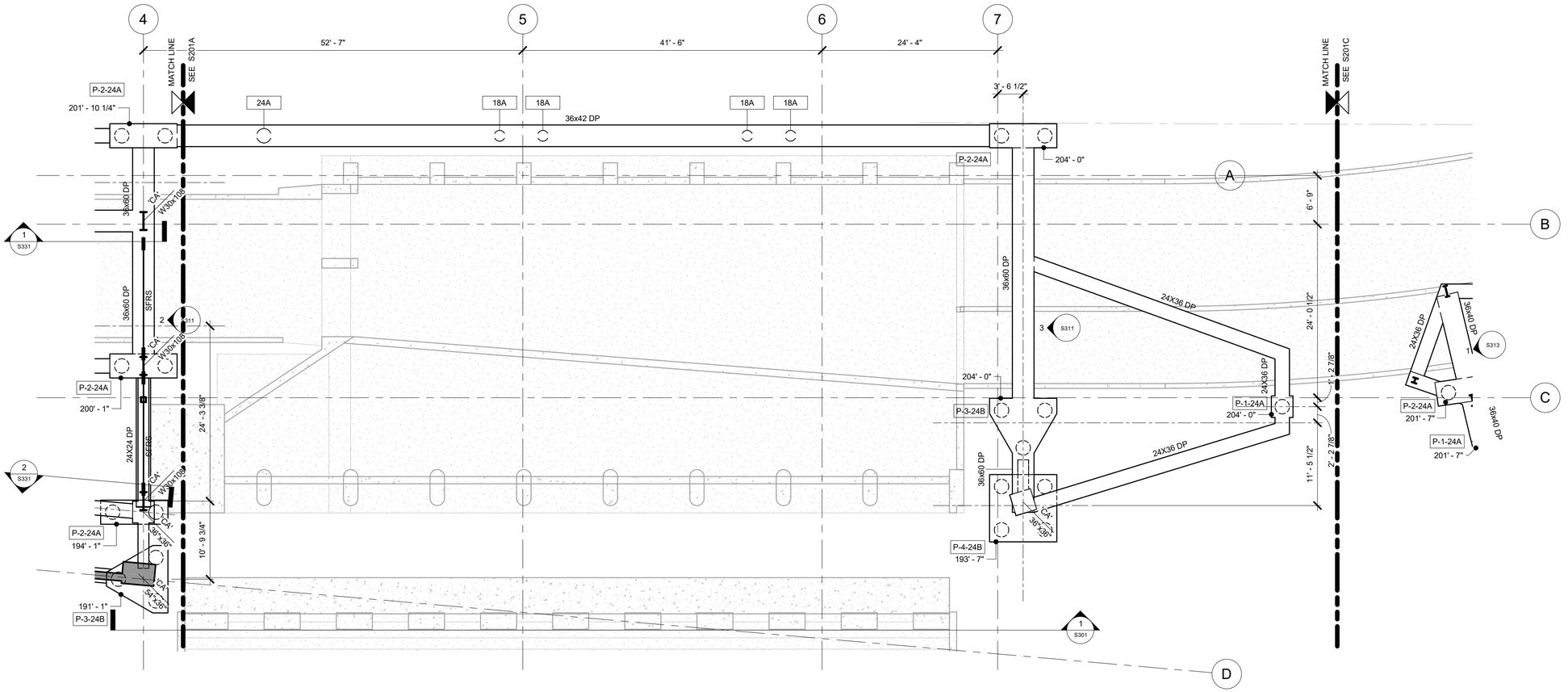

1 FOUNDATION PLAN - NORTH
1/8" = 1'-0"

NOTES:

1. REFER TO 1/S611 FOR PILE CAP SCHEDULE.

NOT FOR CONSTRUCTION

09.AUG.21

ba
belzberg architects
2321 MAIN STREET
SANTA MONICA, CA 90405
310.453.9611
www.belzbergarchitects.com

ARUP
Arup North America Ltd.
900 Wilshire Boulevard,
19th Floor
Los Angeles CA 90017
Tel: 310 578 4400
www.arup.com

#	DESCRIPTION	DATE

LEARNING CENTER
FOUNDATION PLAN - NORTH

PROJECT NUMBER:

S201B

8/10/2021 5:29:21 PM

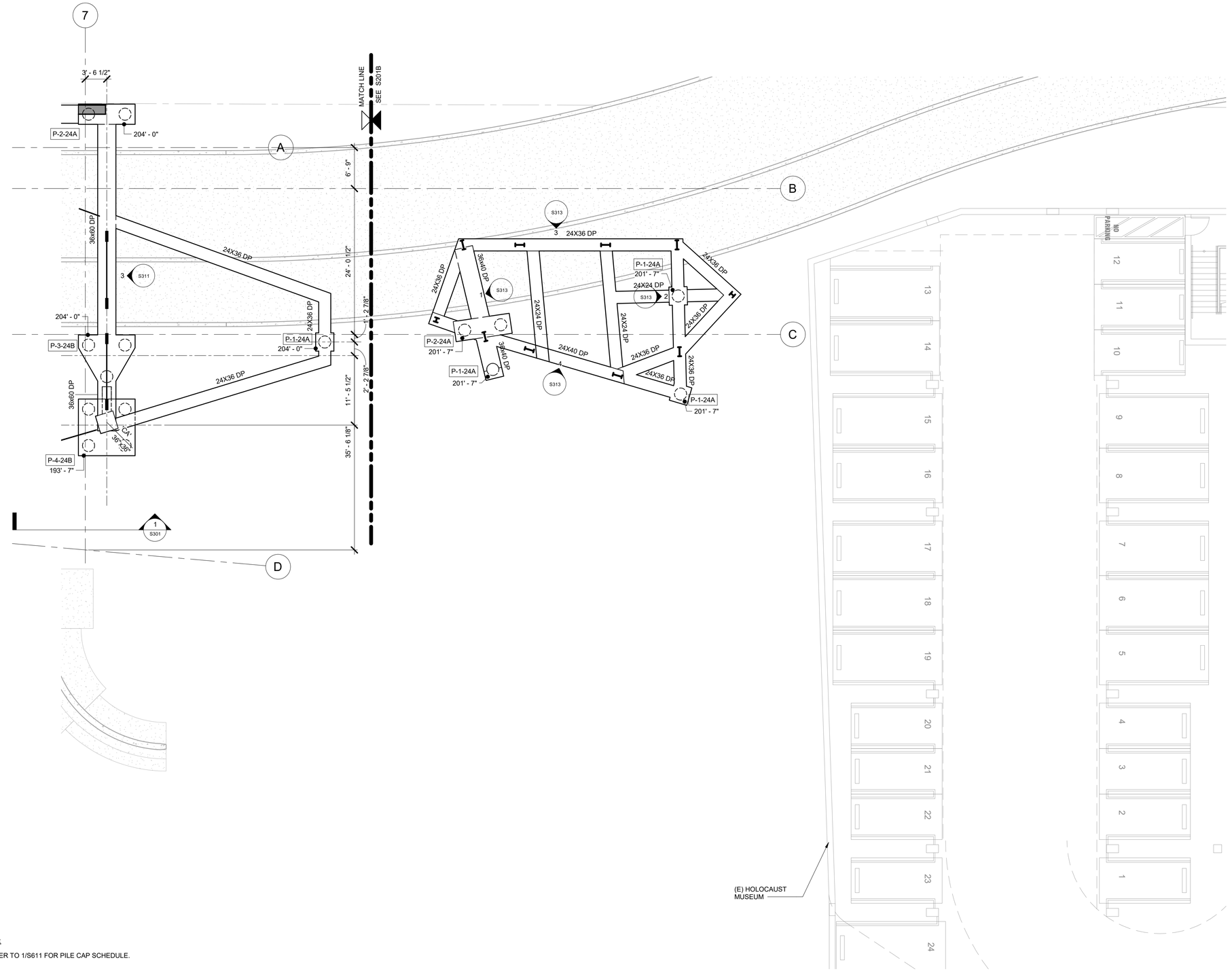

NOTES:

1. REFER TO 1/S611 FOR PILE CAP SCHEDULE.

1 FOUNDATION PLAN - ENTRY PAVILION AND CANOPY
1/8" = 1'-0"

NOT FOR CONSTRUCTION

09.AUG.21

ba
belzberg architects
2321 MAIN STREET
SANTA MONICA, CA 90405
310.453.9611
www.belzbergarchitects.com

ARUP
Arup North America Ltd.
900 Wilshire Boulevard,
19th Floor
Los Angeles CA 90017
Tel: 310 578 4400
www.arup.com

#	DESCRIPTION	DATE

ENTRY PAVILION/BOXCAR PAVILION FOUNDATION PLAN

PROJECT NUMBER:

S201C

8/10/2021 5:29:22 PM

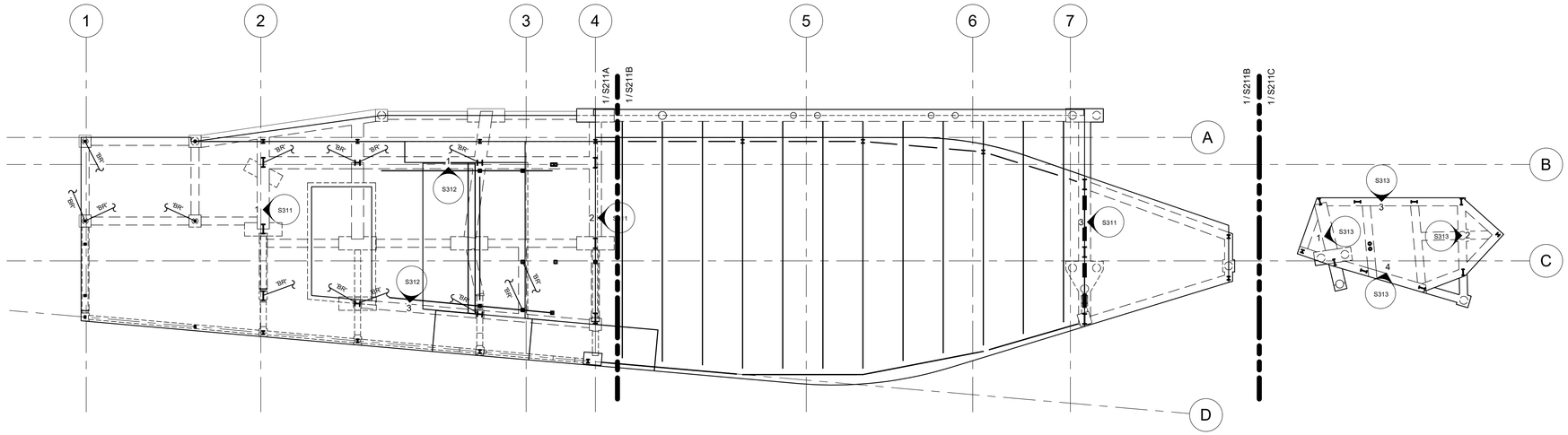

NOT FOR CONSTRUCTION

09.AUG.21

belzberg architects
2321 MAIN STREET
SANTA MONICA, CA 90405
310.453.9611

www.belzbergarchitects.com

ARUP

Arup North America Ltd.
900 Wilshire Boulevard,
19th Floor
Los Angeles CA 90017
Tel: 310 578 4400
www.arup.com

#	DESCRIPTION	DATE

OVERALL GROUND FLOOR PLAN

PROJECT NUMBER:

S211

8/10/2021 5:29:23 PM

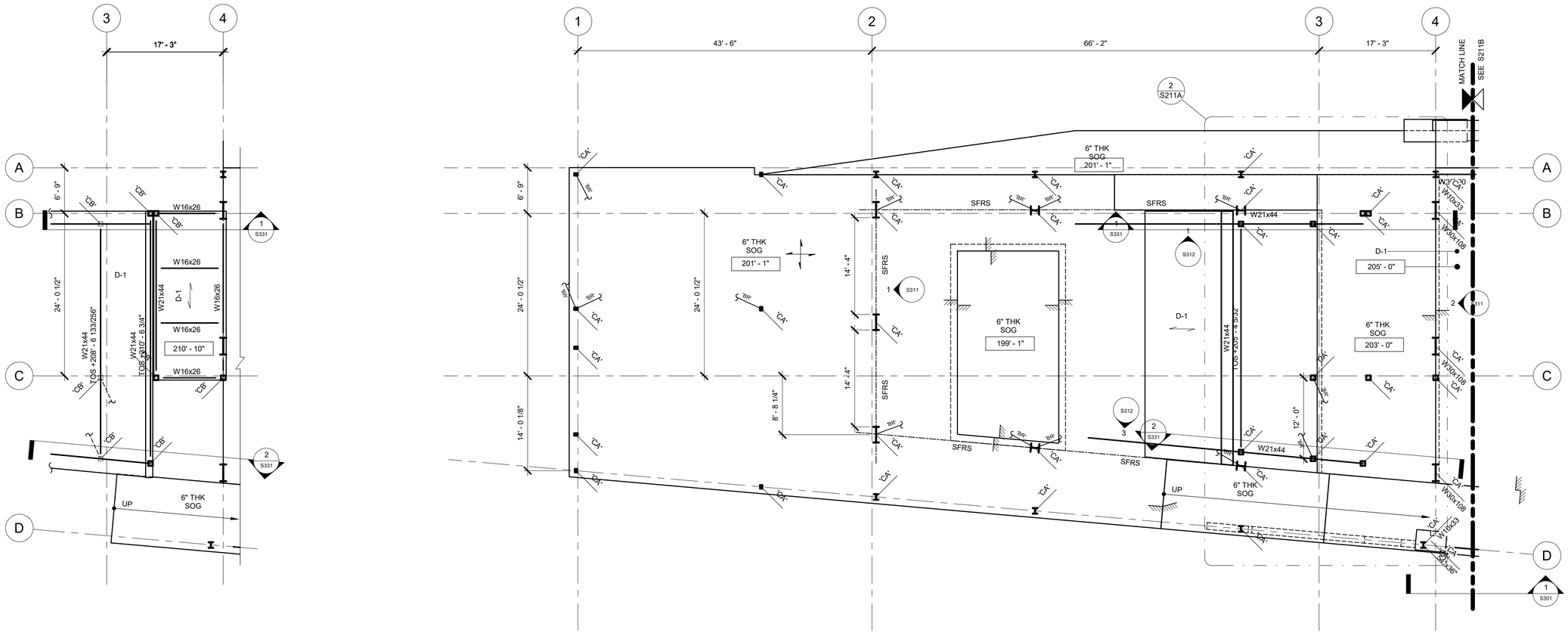

2 02 MEZZANINE - SOUTH
1/8" = 1'-0"

1 01 GALLERY - SOUTH
1/8" = 1'-0"

NOT FOR CONSTRUCTION

09.AUG.21

ba
belzberg architects
2321 MAIN STREET
SANTA MONICA, CA 90405
310.453.9611
www.belzbergarchitects.com

ARUP
Arup North America Ltd.
900 Wilshire Boulevard,
19th Floor
Los Angeles CA 90017
Tel: 310 578 4400
www.arup.com

#	DESCRIPTION	DATE

LEARNING CENTER
GROUND FLOOR
PLAN - SOUTH

PROJECT NUMBER:

S211A

8/10/2021 5:29:25 PM

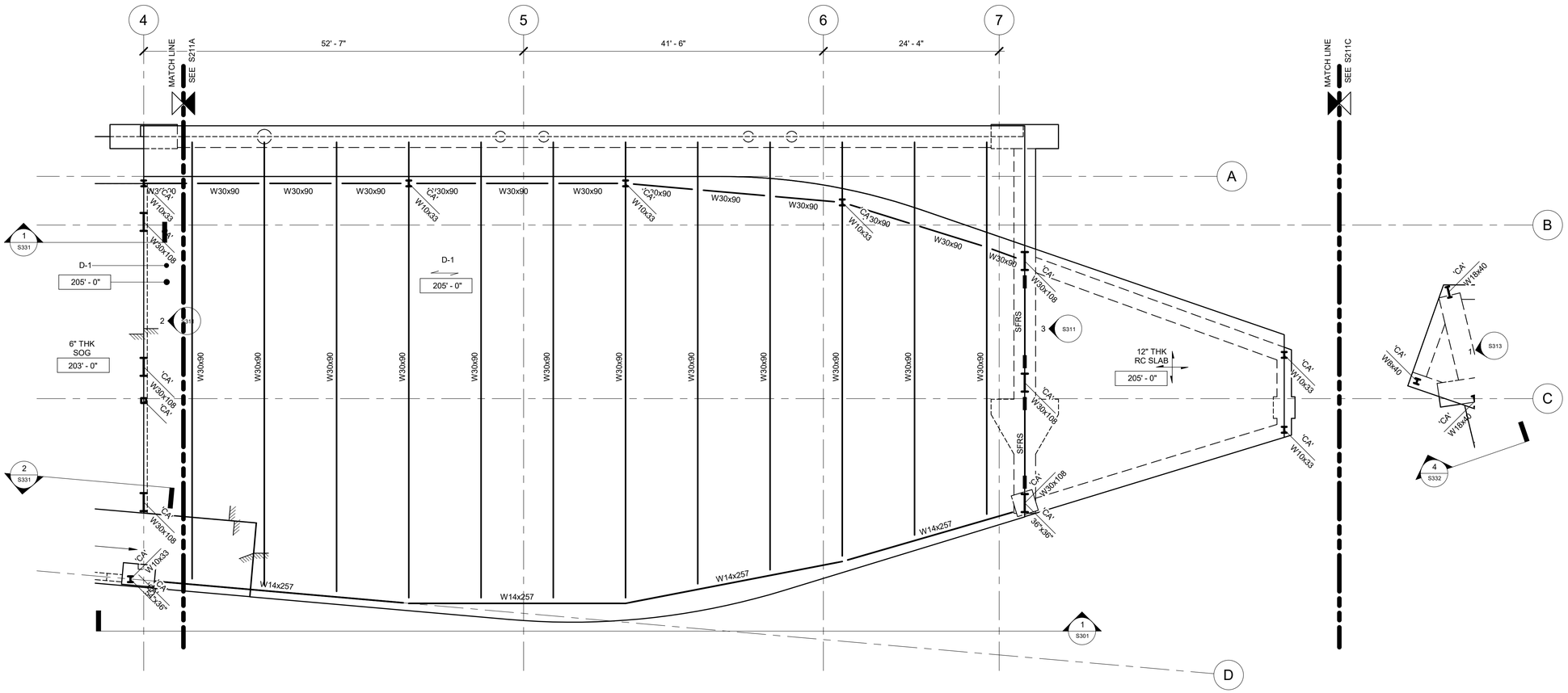
4
5
6
7
52' - 7"
41' - 6"
24' - 4"
MATCH LINE
SEE S211A
MATCH LINE
SEE S211C
A
B
C
D
W30x90
'CA'
W10x33
'CA'
W30x108
'CA'

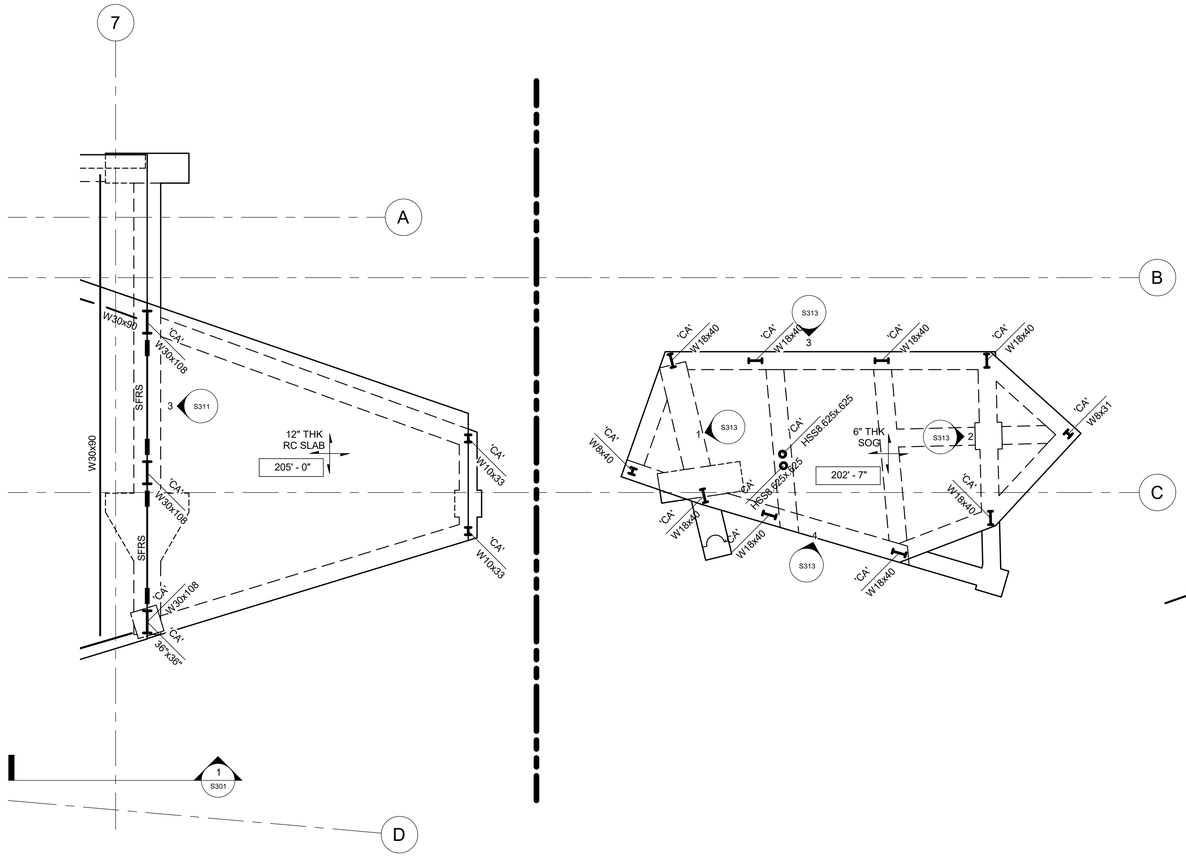

NOT FOR CONSTRUCTION

09.AUG.21

ba
belzberg architects
2321 MAIN STREET
SANTA MONICA, CA 90405
310.453.9611
www.belzbergarchitects.com

ARUP
Arup North America Ltd.
900 Wilshire Boulevard,
19th Floor
Los Angeles CA 90017
Tel: 310 578 4400
www.arup.com

#	DESCRIPTION	DATE

ENTRY
PAVILION/BOXCAR
PAVILION GROUND
FLOOR PLAN

PROJECT NUMBER:

S211C

8/10/2021 5:29:28 PM

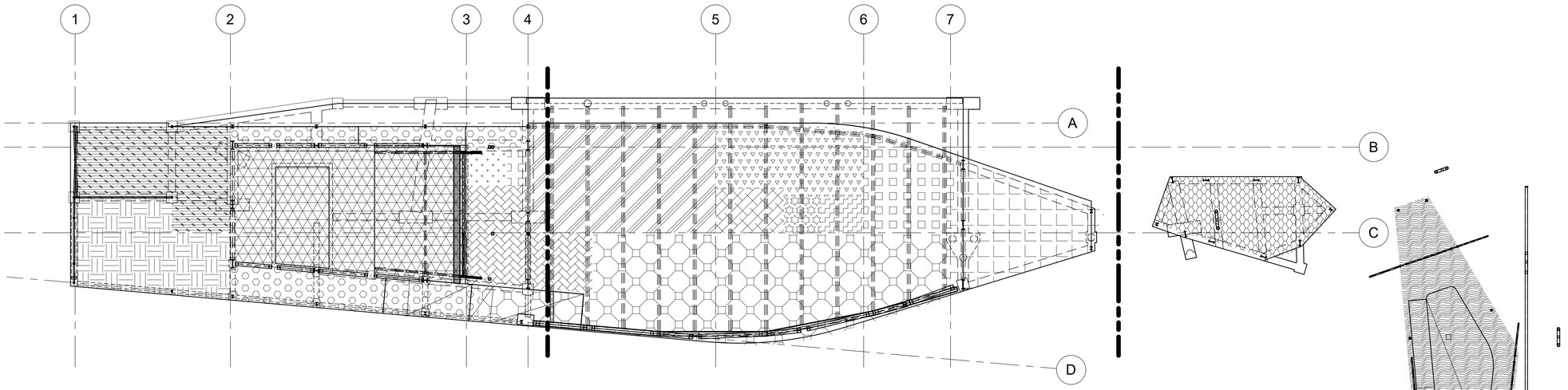

DESIGN FLOOR LOADS

GIFT SHOP:
LL = 100 PSF
SDL TOTAL = 40 PSF
MEP = 3 PSF
FLOOR = 5 PSF
PARTITIONS = 10 PSF
EQUIP/FURNISHINGS= 15 PSF
SOMD OVERPOUR = 5 PSF
MISC = 2 PSF

STORAGE:
LL = 125 PSF
SDL TOTAL = 40 PSF
MEP = 3 PSF
FLOOR = 5 PSF
PARTITIONS = 10 PSF
EQUIP/FURNISHINGS= 15 PSF
SOMD OVERPOUR = 5 PSF
MISC = 2 PSF

BOX CAR EXHIBIT/PAVILION:
LL = 100 PSF
SDL = 25 PSF

GALLERY:
LL = 100 PSF
SDL TOTAL = 40 PSF
MEP = 3 PSF
FLOOR = 5 PSF
PARTITIONS = 10 PSF
EQUIP/FURNISHINGS= 15 PSF
SOMD OVERPOUR = 5 PSF
MISC = 2 PSF

GRN ROOM:
LL = 100 PSF
SDL TOTAL = 40 PSF
MEP = 3 PSF
FLOOR = 5 PSF
PARTITIONS = 10 PSF
EQUIP/FURNISHINGS= 15 PSF
SOMD OVERPOUR = 5 PSF
MISC = 2 PSF

CLASSROOM:
LL = 100 PSF
SDL TOTAL = 40 PSF
MEP = 3 PSF
FLOOR = 5 PSF
PARTITIONS = 10 PSF
EQUIP/FURNISHINGS= 15 PSF
SOMD OVERPOUR = 5 PSF
MISC = 2 PSF

RESTROOMS:
LL = 60 PSF
SDL TOTAL = 40 PSF
MEP = 3 PSF
FLOOR = 5 PSF
PARTITIONS = 10 PSF
EQUIP/FURNISHINGS= 15 PSF
SOMD OVERPOUR = 5 PSF
MISC = 2 PSF

AUDITORIUM:
LL = 100 PSF
SDL TOTAL = 40 PSF
MEP = 3 PSF
FLOOR = 5 PSF
PARTITIONS = 10 PSF
EQUIP/FURNISHINGS= 15 PSF
SOMD OVERPOUR = 5 PSF
MISC = 2 PSF

DiT THEATER:
LL = 100 PSF
SDL TOTAL = 40 PSF
MEP = 3 PSF
FLOOR = 5 PSF
PARTITIONS = 10 PSF
EQUIP/FURNISHINGS= 15 PSF
SOMD OVERPOUR = 5 PSF
MISC = 2 PSF

CORRIDORS:
LL = 100 PSF
SDL TOTAL = 40 PSF
MEP = 3 PSF
FLOOR = 5 PSF
PARTITIONS = 10 PSF
EQUIP/FURNISHINGS= 15 PSF
SOMD OVERPOUR = 5 PSF
MISC = 2 PSF

OFFICE:
LL = 50 PSF
SDL TOTAL = 40 PSF
MEP = 3 PSF
FLOOR = 5 PSF
PARTITIONS = 10 PSF
EQUIP/FURNISHINGS= 15 PSF
SOMD OVERPOUR = 5 PSF
MISC = 2 PSF

MECHANICAL YARD:
LL = 100 PSF
SDL TOTAL = 40 PSF
MEP = 3 PSF
FLOOR = 5 PSF
PARTITIONS = 10 PSF
EQUIP/FURNISHINGS= 15 PSF
SOMD OVERPOUR = 5 PSF
MISC = 2 PSF

IT EQUIPMENT ROOM:
LL = 100 PSF
SDL TOTAL = 40 PSF
MEP = 3 PSF
FLOOR = 5 PSF
PARTITIONS = 10 PSF
EQUIP/FURNISHINGS= 15 PSF
SOMD OVERPOUR = 5 PSF
MISC = 2 PSF

COURTYARD:
LL = 100 PSF
SDL TOTAL = 35 PSF
MEP = 3 PSF
FLOOR = 5 PSF
PARTITIONS = 10 PSF
EQUIP/FURNISHINGS= 15 PSF
MISC = 2 PSF

VESTIBULE:
LL = 100 PSF (TBC)
SDL TOTAL = 40 PSF
MEP = 3 PSF
FLOOR = 5 PSF
PARTITIONS = 10 PSF
EQUIP/FURNISHINGS= 15 PSF
SOMD OVERPOUR = 5 PSF
MISC = 2 PSF

ENTRY PAVILION:
LL = 100 PSF
SDL TOTAL = 40 PSF
MEP = 3 PSF
FLOOR = 5 PSF
PARTITIONS = 10 PSF
EQUIP/FURNISHINGS= 15 PSF
SOMD OVERPOUR = 5 PSF
MISC = 2 PSF

CONCENTRATED LOADS

CLASSROOMS:
LL = 1,000 LBS (TBC)

GIFT SHOP::
LL = 1,000 LBS (TBC)

BOX CAR EXHIBIT/PAVILION:
LL = 1,000 LBS (TBC)
BOX CAR SELF WT: 18,000 LBS (TBC)

1 OVERALL GROUND FLOOR PLAN - LOADING
1/16" = 1'-0"

NOT FOR CONSTRUCTION

09.AUG.21

ba
belzberg architects
2321 MAIN STREET
SANTA MONICA, CA 90405
310.453.9611
www.belzbergarchitects.com

ARUP
Arup North America Ltd.
900 Wilshire Boulevard,
19th Floor
Los Angeles CA 90017
Tel: 310 578 4400
www.arup.com

#	DESCRIPTION	DATE

OVERALL GROUND FLOOR PLAN - LOADING

PROJECT NUMBER:

S211L

8/10/2021 5:29:31 PM

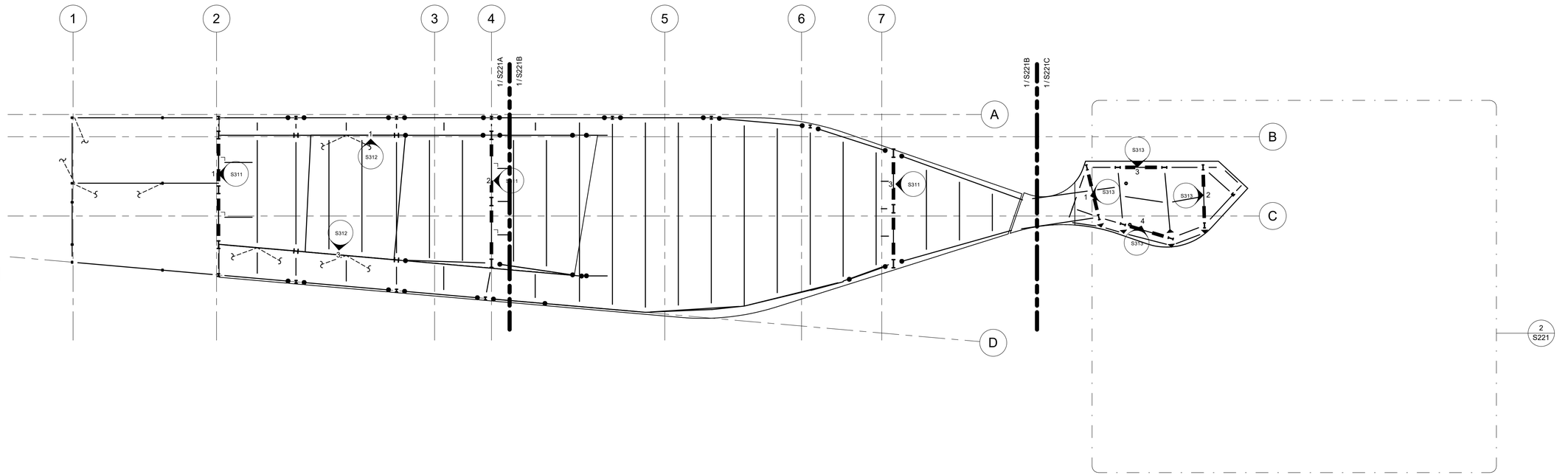

1 OVERALL ROOF PLAN
1/16" = 1'-0"

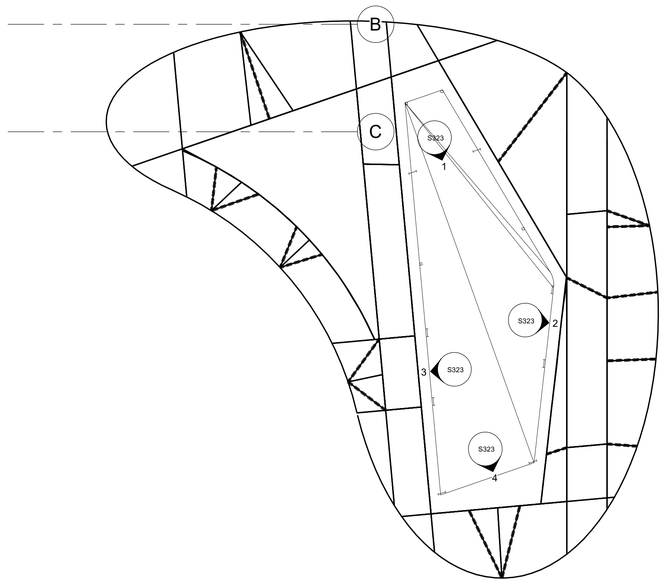

2 03.5 HIGH ROOF OVERALL PLAN
1/16" = 1'-0"

NOT FOR CONSTRUCTION

09.AUG.21

ba
belzberg architects
2321 MAIN STREET
SANTA MONICA, CA 90405
310.453.9611
www.belzbergarchitects.com

ARUP
Arup North America Ltd.
900 Wilshire Boulevard,
19th Floor
Los Angeles CA 90017
Tel: 310 578 4400
www.arup.com

#	DESCRIPTION	DATE

OVERALL ROOF PLAN

PROJECT NUMBER:

S221

8/10/2021 5:23:32 PM

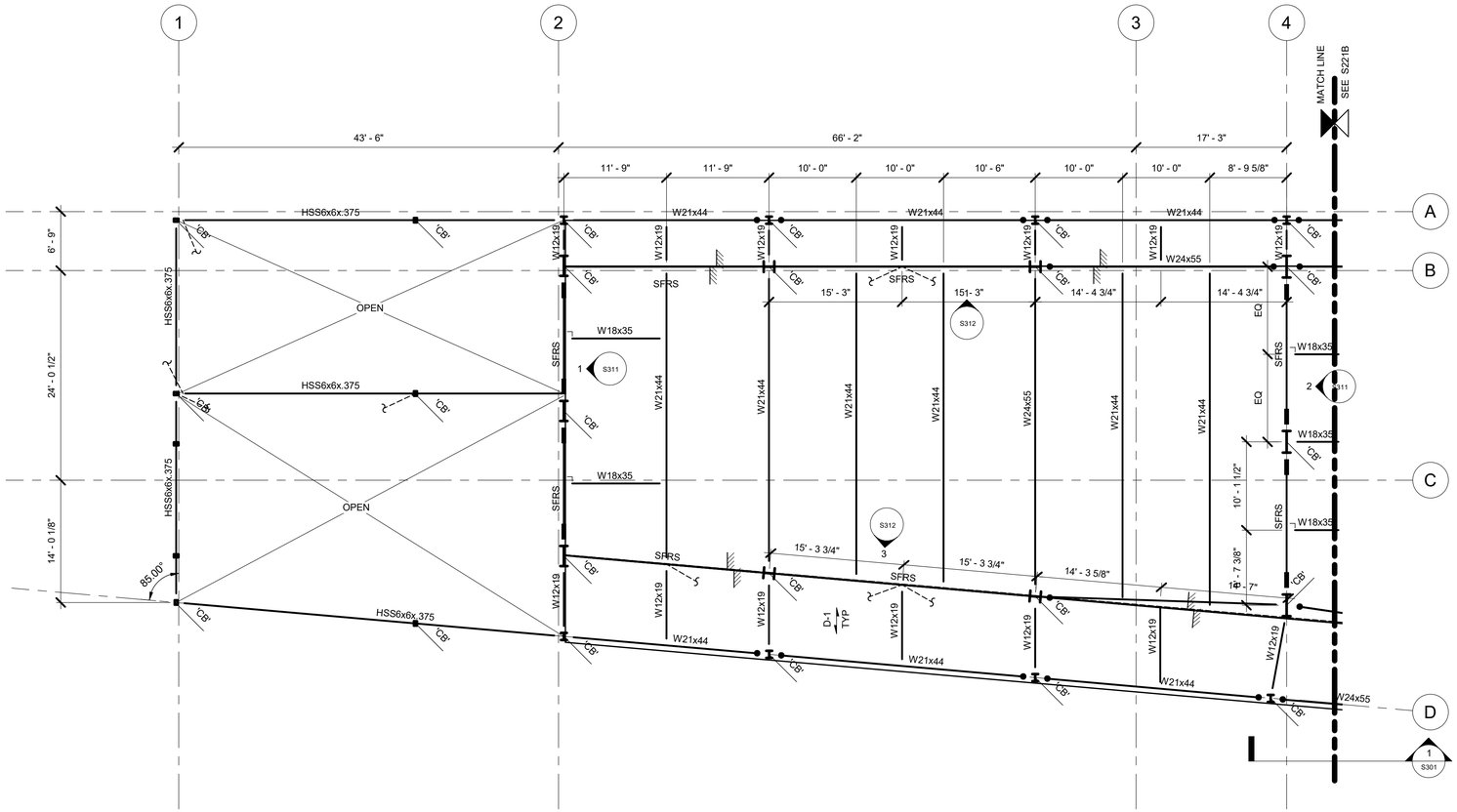

NOT FOR CONSTRUCTION

09.AUG.21

belzberg architects

2321 MAIN STREET
SANTA MONICA, CA 90405
310.453.9611

www.belzbergarchitects.com

ARUP

Arup North America Ltd.
900 Wilshire Boulevard,
19th Floor
Los Angeles CA 90017
Tel: 310 578 4400
www.arup.com

#	DESCRIPTION	DATE

LEARNING CENTER
ROOF PLAN - SOUTH

PROJECT NUMBER:

S221A

8/10/2021 5:29:34 PM

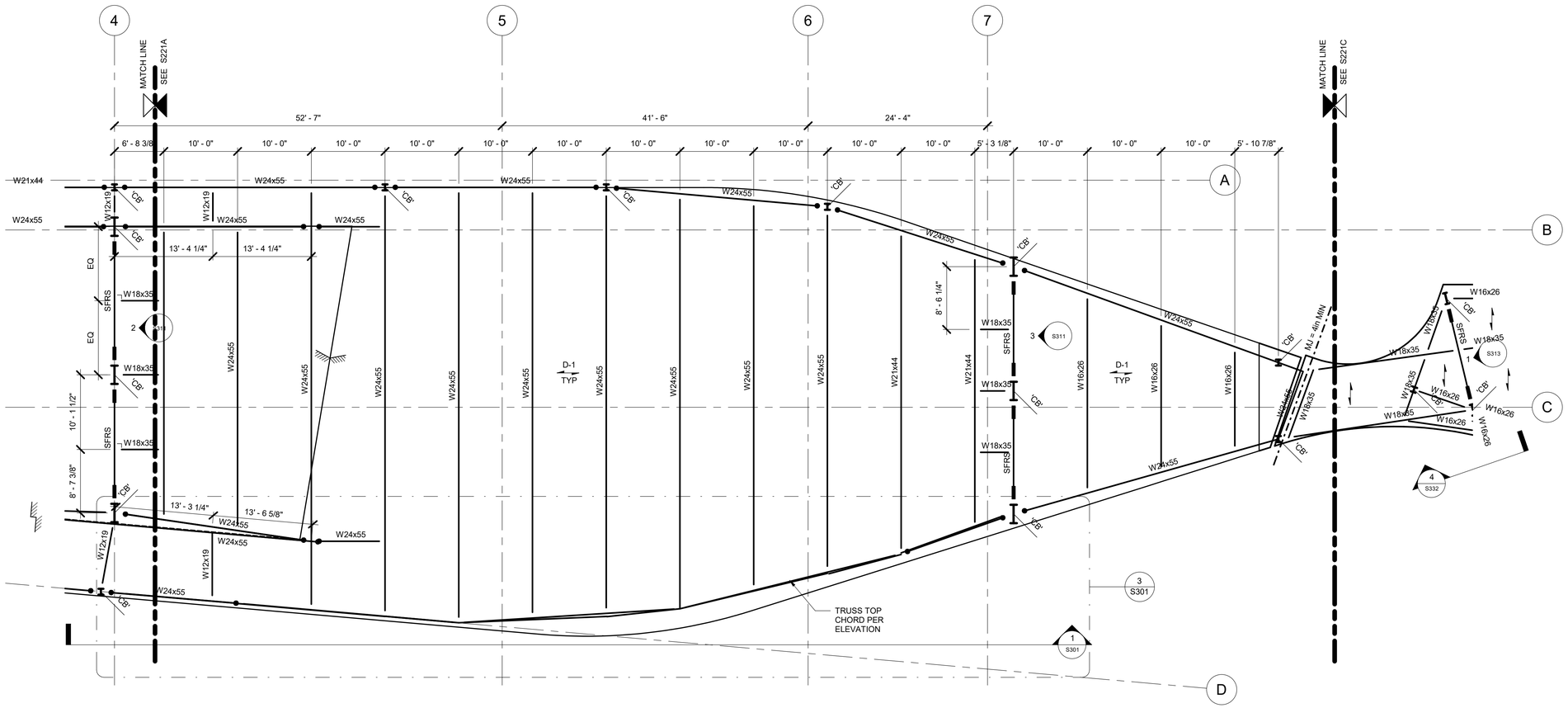

NOT FOR CONSTRUCTION

09.AUG.21

belzberg architects

2321 MAIN STREET
SANTA MONICA, CA 90405
310.453.9611

www.belzbergarchitects.com

ARUP

Arup North America Ltd.
900 Wilshire Boulevard,
19th Floor
Los Angeles CA 90017
Tel: 310 578 4400
www.arup.com

#	DESCRIPTION	DATE

LEARNING CENTER
ROOF PLAN - NORTH

PROJECT NUMBER:

S221B

8/10/2021 5:29:37 PM

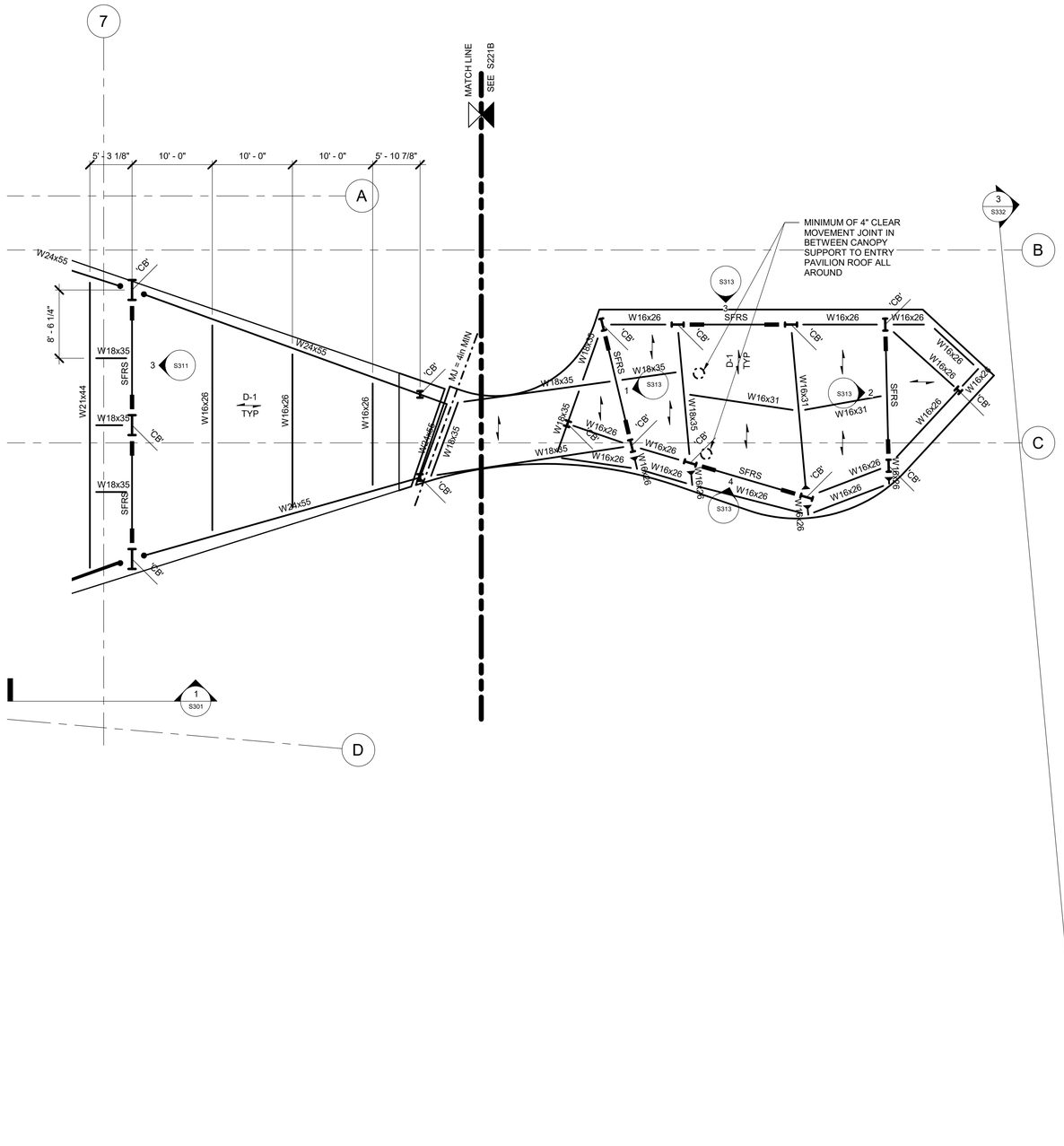

NOT FOR CONSTRUCTION

09.AUG.21

belzberg architects
2321 MAIN STREET
SANTA MONICA, CA 90405
310.453.9611
www.belzbergarchitects.com

ARUP
Arup North America Ltd.
900 Wilshire Boulevard,
19th Floor
Los Angeles CA 90017
Tel: 310 578 4400
www.arup.com

#	DESCRIPTION	DATE

ENTRY
PAVILION/BOXCAR
PAVILION ROOF
PLAN

PROJECT NUMBER:

S221C

8/10/2021 5:29:37 PM

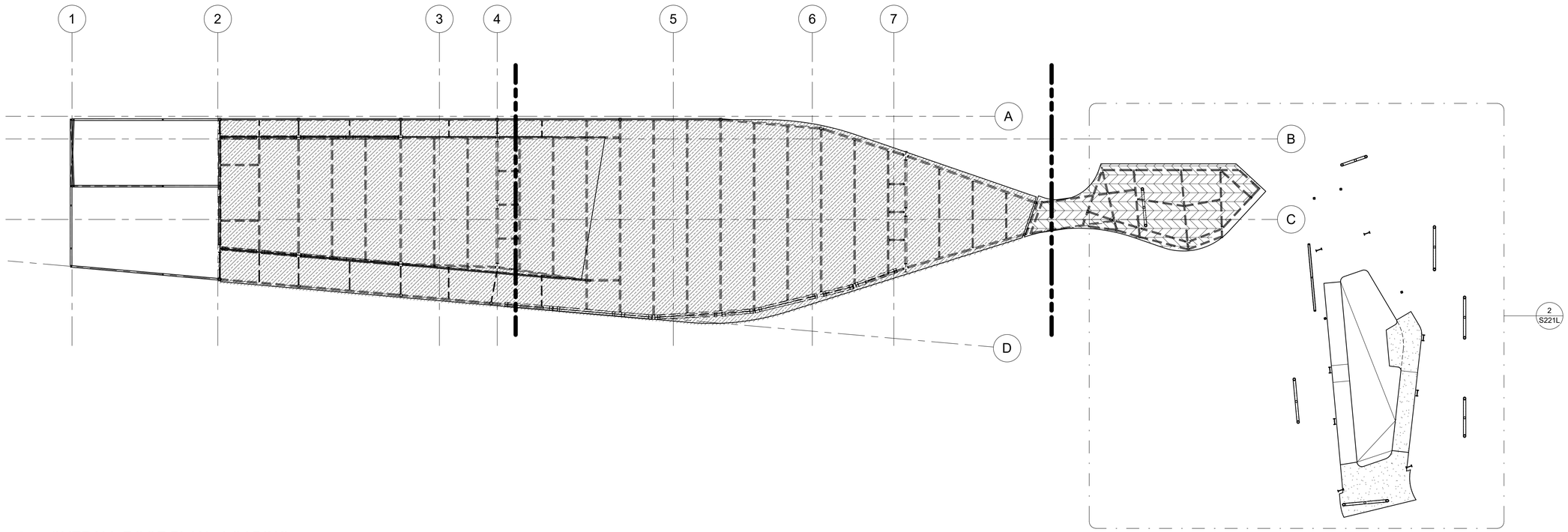

1 OVERALL ROOF PLAN - LOADING
1/16" = 1'-0"

DESIGN ROOF LOADS

LEARNING CENTER:
LL = 20 PSF
SDL TOTAL = 35 PSF
MEP = 3 PSF
PV PANELS = 9 PSF
ROOFING = 10 PSF
CEILING = 5 PSF
SOMD OVERPOUR = 5 PSF
MISC = 3 PSF

SDL (GLASS WALLS) = 15 PSF
PARTITIONS = 10 PSF

ENTRY PAVILION:
LL = 20 PSF
SDL TOTAL = 35 PSF
MEP = 3 PSF
PV PANELS = 9 PSF
ROOFING = 10 PSF
CEILING = 5 PSF
SOMD OVERPOUR = 5 PSF
MISC = 3 PSF

SDL (GLASS WALLS) = 15 PSF

CANOPY:
LL = 5 PSF
SDL TOTAL = 5 PSF
PTFE FABRIC = 1 PSF
CONN/SEC ELEMENTS = 3 PSF
MISC = 1 PSF

BOX CAR EXHIBIT/PAVILION:
LL = 20 PSF
SDL = 25 PSF
SDL (GLASS WALLS) = 15 PSF

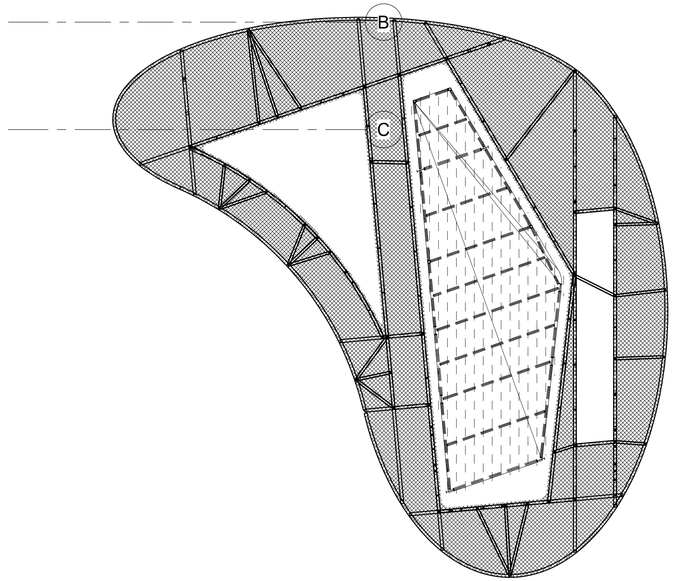

2 CANOPY ROOF PLAN
1/16" = 1'-0"

NOT FOR CONSTRUCTION

09.AUG.21

ba
belzberg architects
2321 MAIN STREET
SANTA MONICA, CA 90405
310.453.9611
www.belzbergarchitects.com

ARUP
Arup North America Ltd.
900 Wilshire Boulevard,
19th Floor
Los Angeles CA 90017
Tel: 310 578 4400
www.arup.com

#	DESCRIPTION	DATE

OVERALL ROOF PLAN - LOADING

PROJECT NUMBER:

S221L

8/10/2021 5:29:43 PM

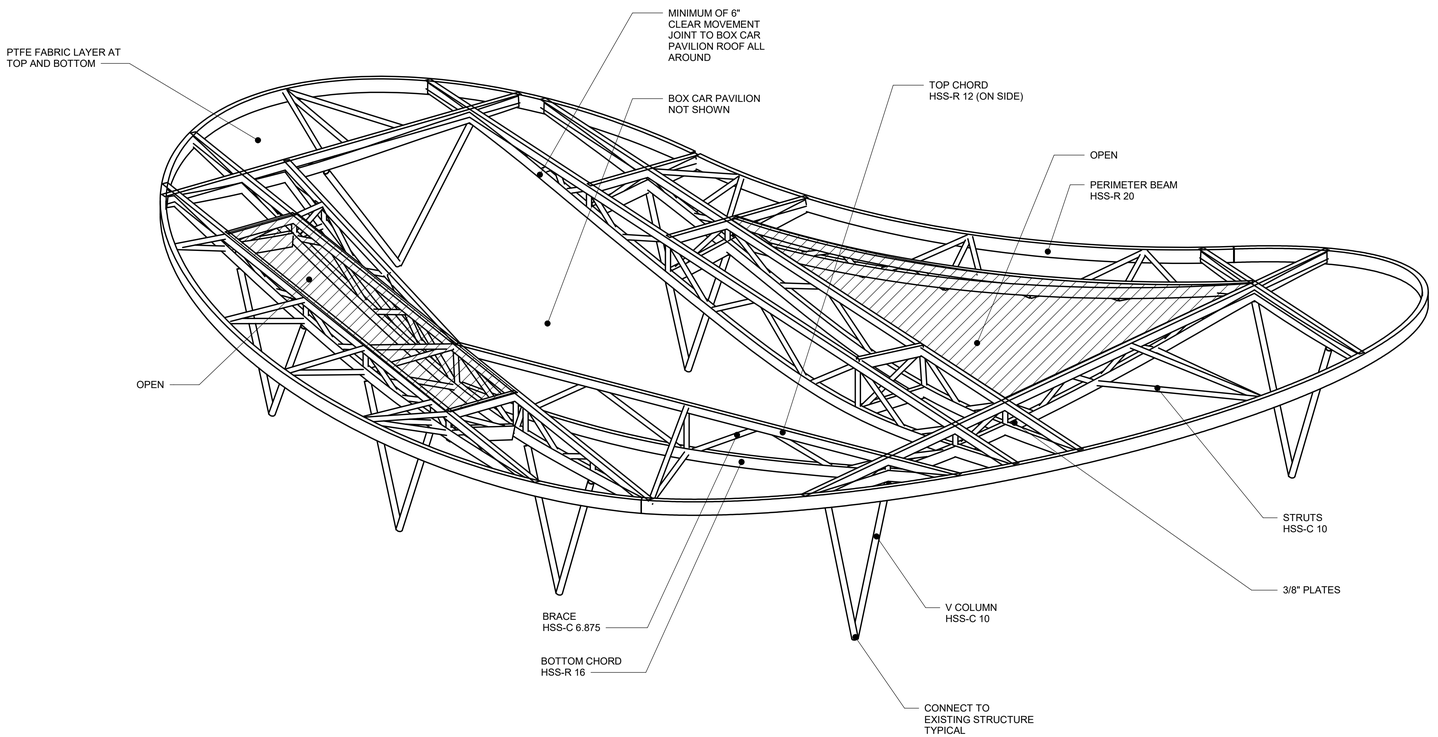

1 CANOPY STRUCTURE

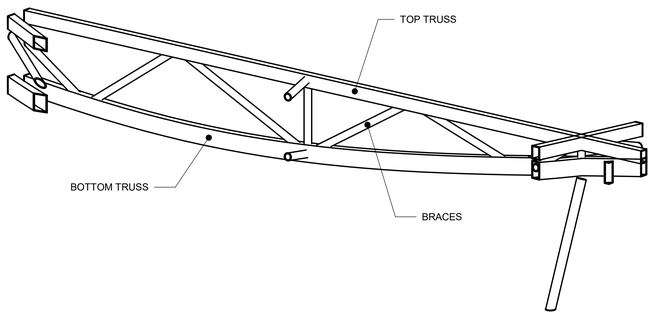

2 TYPICAL CANOPY STRUCTURE TRUSS ELEVATION

NOTES:

1. FOR COST ESTIMATING PURPOSES ASSUME 14PSF OVER GROSS CANOPY AREA INCLUDING CONNECTIONS BUT EXCLUDING WASTAGE FOR STEEL.
2. THE CONTRACTOR SHALL PROCURE THE DESIGN, FABRICATION AND INSTALLATION OF THE FABRIC INCLUDING ALL HARDWARE FOR INSTALLATION.
3. THE STRUCTURAL ENGINEERING SHALL BE PREPARED AND STAMPED/SIGNED BY A CIVIL OR STRUCTURAL ENGINEER LICENSED IN CALIFORNIA.
4. THE STRUCTURAL ENGINEER OF THE FABRIC SHALL SUBMIT DESIGN CALCULATIONS FOR LOADS ON STRUCTURE TO THE SEOR PRIOR TO SUBMITTING TO THE AHJ.
5. IN THE DESIGN THE STRUCTURAL ENGINEER SHALL ADJUST THE PRETENSION AND THE SURFACE GRADIENT SO PONDING CAN BE EFFECTIVELY AVOIDED.
6. THE STRUCTURAL ENGINEER OF THE FABRIC IS RESPONSIBLE TO INCLUDE THE APPROPRIATE TEMPERATURE LOAD CASES AND TO CONSIDER ALL TEMPORARY LOADING CONDITIONS.
7. THE PRETENSION ON THE MAIN STEEL STRUCTURE SHALL NOT EXCEED 0.3KIPS/FT.
8. DEFINITIONS:
   RECTANGULAR HSS = HSS-R NOMINAL DEPTH IN INCHES
   CIRCULAR HSS = HSS-C NOMINAL DIAMETER IN INCHES

NOT FOR CONSTRUCTION

09.AUG.21

ba
belzberg architects
2321 MAIN STREET
SANTA MONICA, CA 90405
310.453.9611
www.belzbergarchitects.com

ARUP
Arup North America Ltd.
900 Wilshire Boulevard,
19th Floor
Los Angeles CA 90017
Tel: 310 578 4400
www.arup.com

#	DESCRIPTION	DATE

CANOPY ROOF FRAMING PLAN

PROJECT NUMBER:

S227

8/10/2021 5:29:45 PM

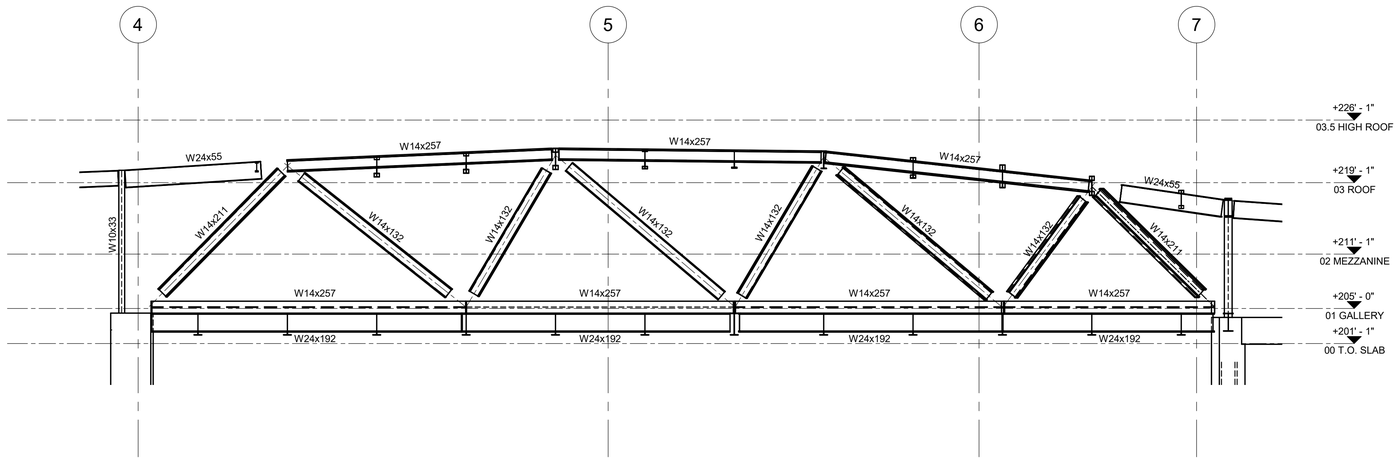

1 STRUCTURAL TRUSS ELEVATION

1/8" = 1'-0"

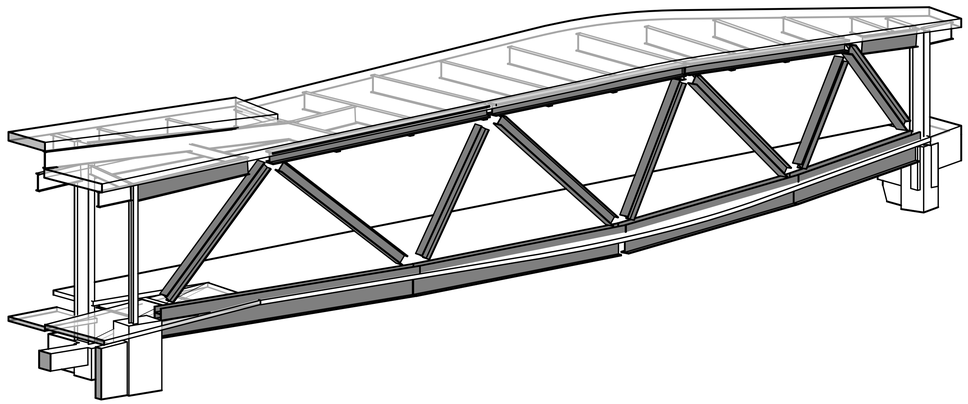

2 ISOMETRIC VIEW

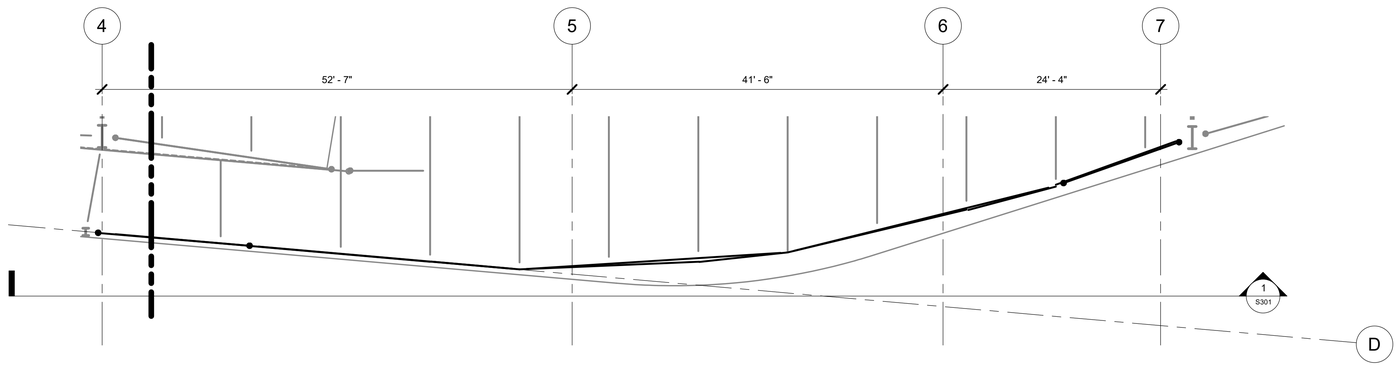

3 PLAN VIEW

1/8" = 1'-0"

TRUSS NOTES:

1. CONTRACTOR IS RESPONSIBLE FOR ALL TEMPORARY CONDITIONS.
2. PROVIDE A CAMBER OF Xin AT MIDSPAN.
3. STRUCTURAL DESIGN FOR THE FINAL CONDITION ASSUMES SHORED CONSTRUCTION WITH DELAYED POUR JOINTS IN EAST-WEST DIRECTION AT BOTH ENDS OF THE TRUSS.
4. SPLICE ONLY AT THE LOCATIONS INDICATED.
5. PROVIDE SURVEY OF THE SHORED AND FULLY DETAILED CONDITION BEFORE DE-SHORING TO SEOR.
6. CONCRETE ON METAL DECK ON ROOF AND GROUND FLOOR NEEDS TO HAVE REACHED FULL DESIGN STRENGTH BEFORE DE-SHORING TRUSS.
7. PROVIDE SURVEY OF THE DE-SHORED CONDITION TO THE SEOR FOR RECORD.
8. TIGHTEN BOLTS IN CONNECTION 9/S637 AFTER DE-SHORING.
9. CAST DELAYED POUR JOINT AFTER DE-SHORING.
10. ALL BOLTED TRUSS CONNECTIONS SHALL BE SLIP-CRITICAL.

NOT FOR CONSTRUCTION

09.AUG.21

ba
belzberg architects
2321 MAIN STREET
SANTA MONICA, CA 90405
310.453.9611
www.belzbergarchitects.com

ARUP
Arup North America Ltd.
900 Wilshire Boulevard,
19th Floor
Los Angeles CA 90017
Tel: 310 578 4400
www.arup.com

#	DESCRIPTION	DATE

LEARNING CENTER
TRUSS ELEVATION

PROJECT NUMBER:

S301

8/10/2021 5:29:47 PM

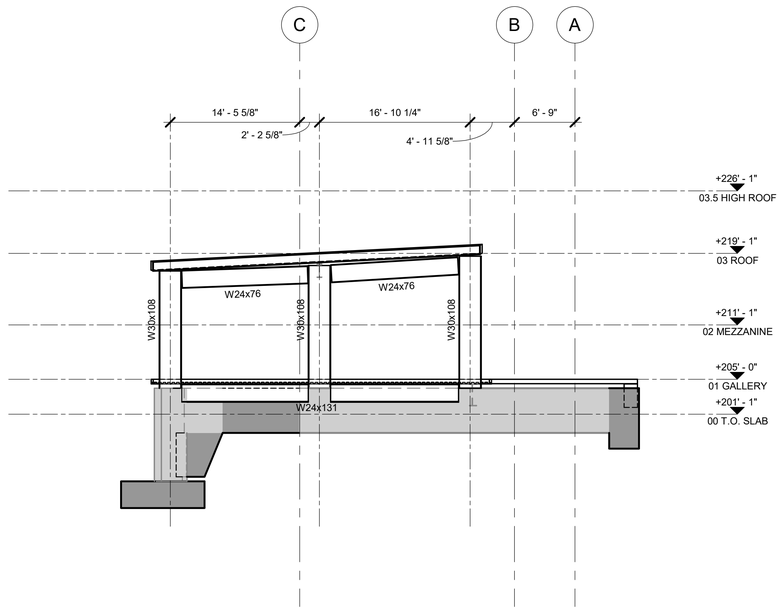

3 SPECIAL MOMENT FRAME NEAR GL7 (SFRS)
1/8" = 1'-0"

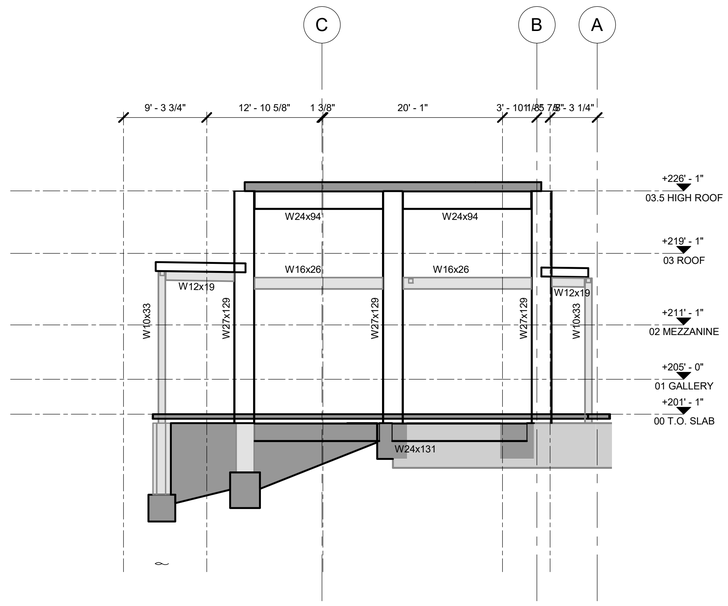

1 SPECIAL MOMENT FRAME NEAR GL2 (SFRS)
1/8" = 1'-0"

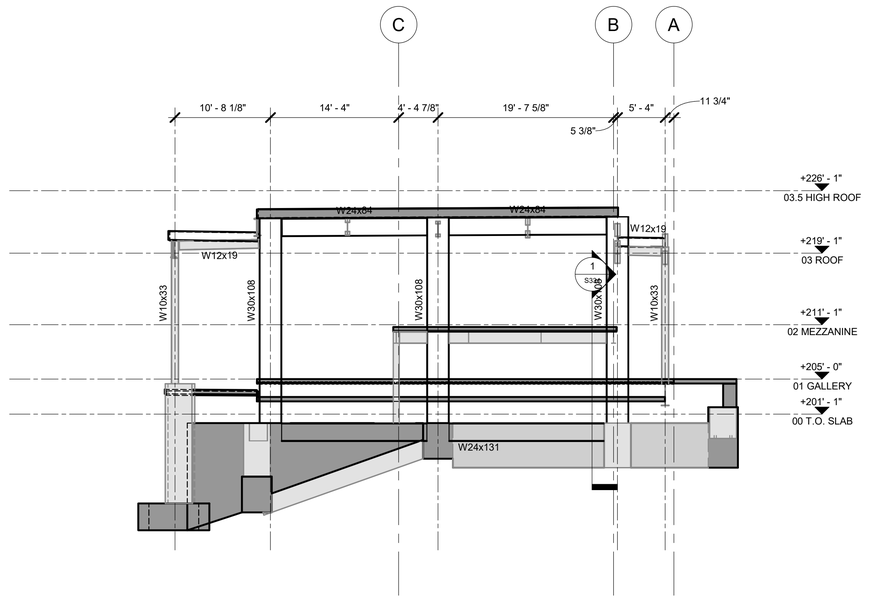

2 SPECIAL MOMENT FRAME AT GL 4 (SFRS)
1/8" = 1'-0"

NOT FOR CONSTRUCTION

09.AUG.21

belzberg architects
2321 MAIN STREET
SANTA MONICA, CA 90405
310.453.9611

www.belzbergarchitects.com

ARUP

Arup North America Ltd.
900 Wilshire Boulevard,
19th Floor
Los Angeles CA 90017
Tel: 310 578 4400
www.arup.com

#	DESCRIPTION	DATE

LEARNING CENTER
STRUCTURAL
MOMENT FRAME
ELEVATIONS

PROJECT NUMBER:

S311

8/10/2021 5:29:48 PM

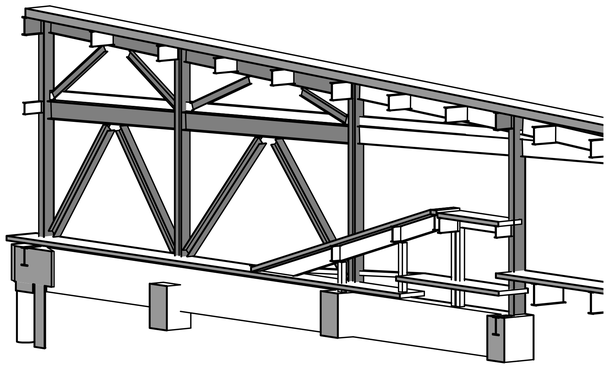

2 SPECIAL CONCENTRIC BRACED FRAME ISOMETRIC AT GL B

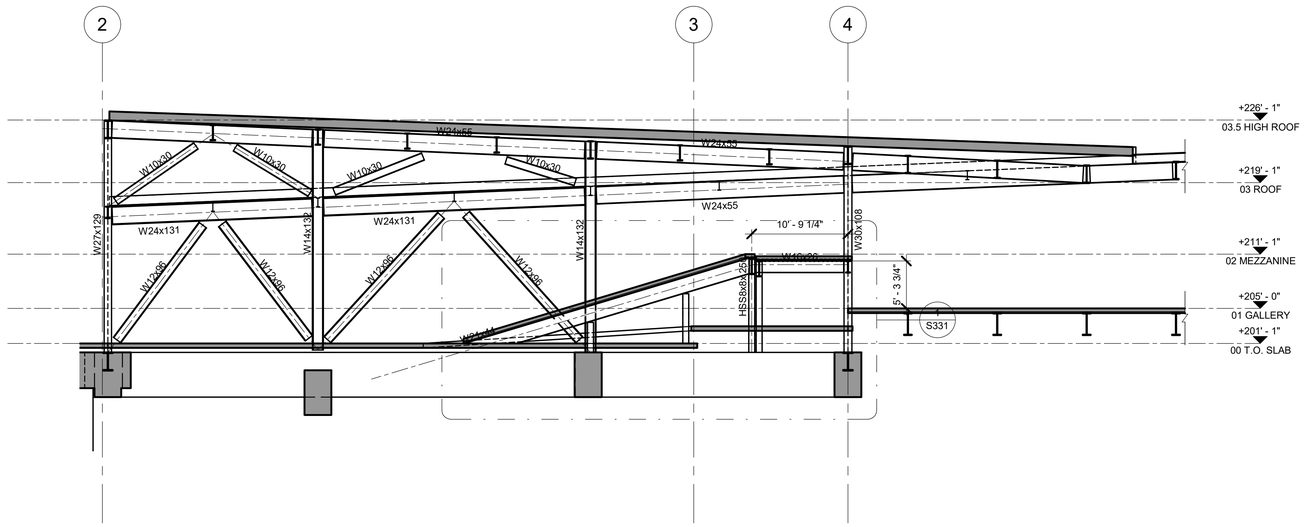

1 SPECIAL CONCENTRIC BRACED FRAME ELEVATION AT GL B (SFRS)
1/8" = 1'-0"

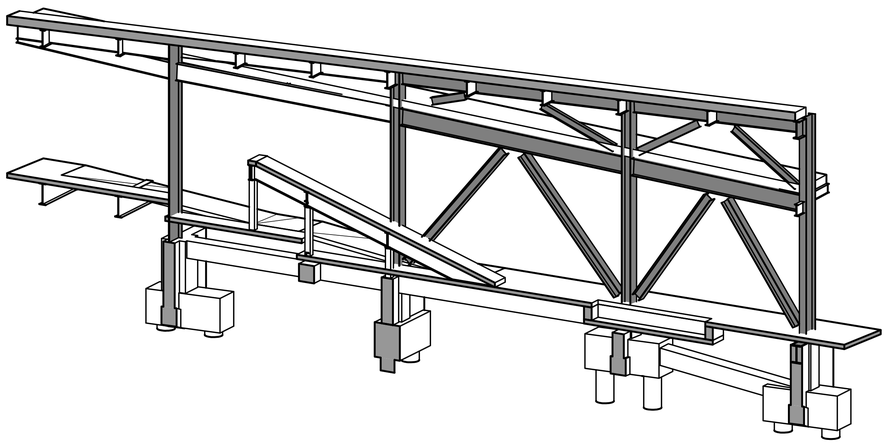

4 SPECIAL CONCENTRIC RACED FRAME ISOMETRIC AT GL C.5

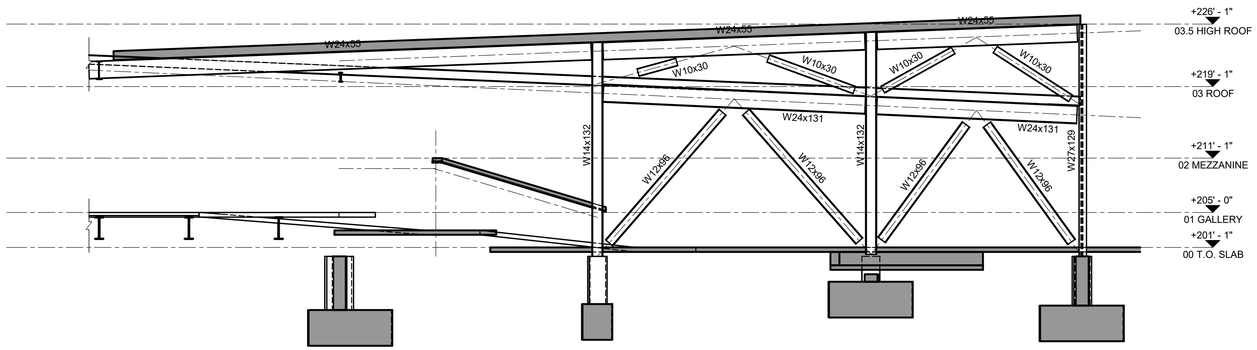

3 SPECIAL CONCENTRIC BRACED FRAME ELEVATION AT GL C.5 (SFRS)
1/8" = 1'-0"

NOT FOR CONSTRUCTION

09.AUG.21

belzberg architects
2321 MAIN STREET
SANTA MONICA, CA 90405
310.453.9611
www.belzbergarchitects.com

ARUP
Arup North America Ltd.
900 Wilshire Boulevard,
19th Floor
Los Angeles CA 90017
Tel: 310 578 4400
www.arup.com

#	DESCRIPTION	DATE

LEARNING CENTER
STRUCTURAL
BRACED FRAME
ELEVATIONS

PROJECT NUMBER:

S312

8/10/2021 5:29:49 PM

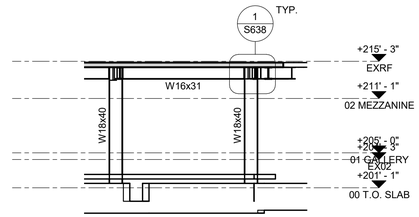

4 SPECIAL MOMENT FRAME AT ENTRY PAVILION - EAST (SFRS)
1/8" = 1'-0"

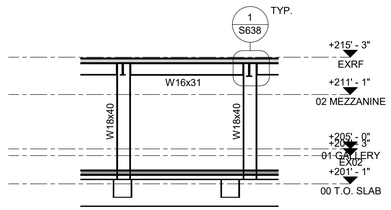

3 SPECIAL MOMENT FRAME AT ENTRY PAVILION - WEST (SFRS)
1/8" = 1'-0"

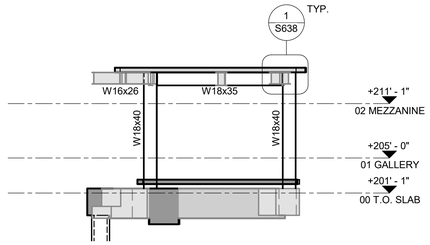

1 SPECIAL MOMENT FRAME AT ENTRY PAVILION - SOUTH (SFRS)
1/8" = 1'-0"

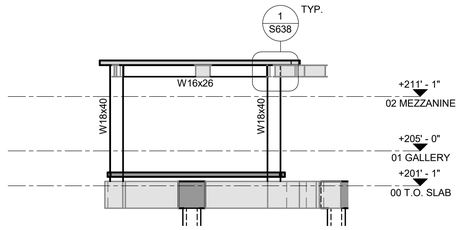

2 SPECIAL MOMENT FRAME AT ENTRY PAVILION - NORTH (SFRS)
1/8" = 1'-0"

NOT FOR CONSTRUCTION

09.AUG.21

ba
belzberg architects
2321 MAIN STREET
SANTA MONICA, CA 90405
310.453.9611

www.belzbergarchitects.com

ARUP
Arup North America Ltd.
900 Wilshire Boulevard,
19th Floor
Los Angeles CA 90017
Tel: 310 578 4400
www.arup.com

#	DESCRIPTION	DATE

ENTRY PAVILION STRUCTURAL MOMENT FRAME ELEVATIONS

PROJECT NUMBER:

S313

8/10/2021 5:29:49 PM

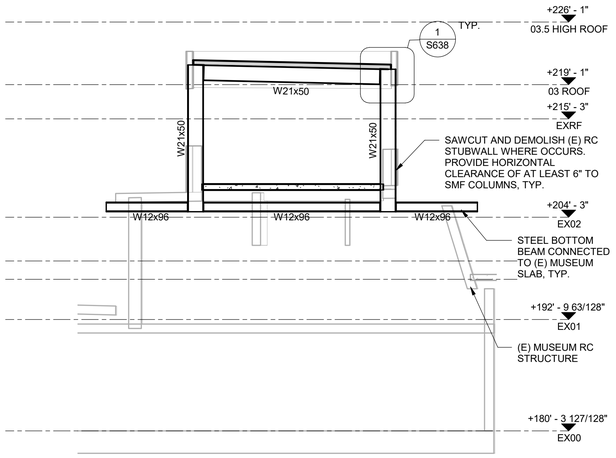

4 SPECIAL MOMENT FRAME AT BOXCAR PAVILION
1/8" = 1'-0"

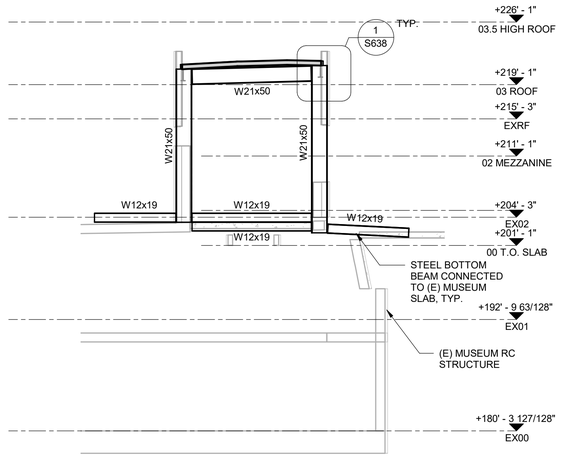

1 SPECIAL MOMENT FRAME AT BOXCAR PAVILION
1/8" = 1'-0"

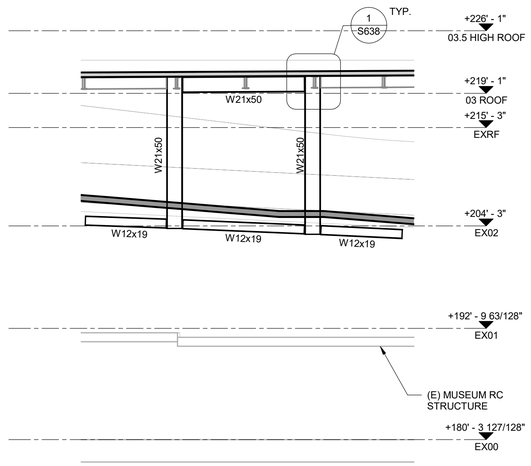

3 SPECIAL MOMENT FRAME AT BOXCAR PAVILION
1/8" = 1'-0"

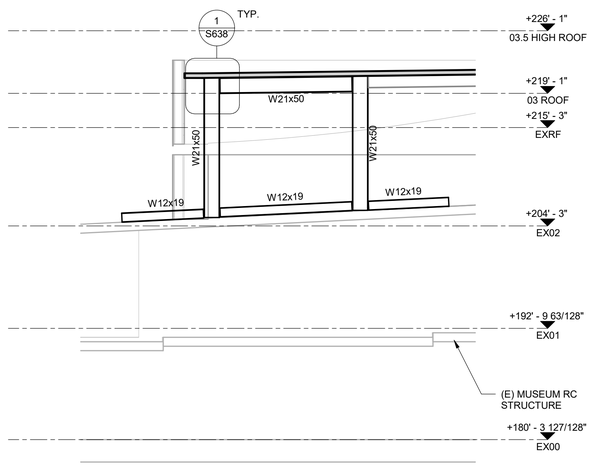

2 SPECIAL MOMENT FRAME AT BOXCAR PAVILION
1/8" = 1'-0"

NOT FOR CONSTRUCTION

09.AUG.21

belzberg architects
2321 MAIN STREET
SANTA MONICA, CA 90405
310.453.9611
www.belzbergarchitects.com

ARUP
Arup North America Ltd.
900 Wilshire Boulevard,
19th Floor
Los Angeles CA 90017
Tel: 310 578 4400
www.arup.com

#	DESCRIPTION	DATE

BOX CAR PAVILION
SPECIAL MOMENT
FRAME ELEVATIONS

PROJECT NUMBER:

S323

8/10/2021 5:29:49 PM

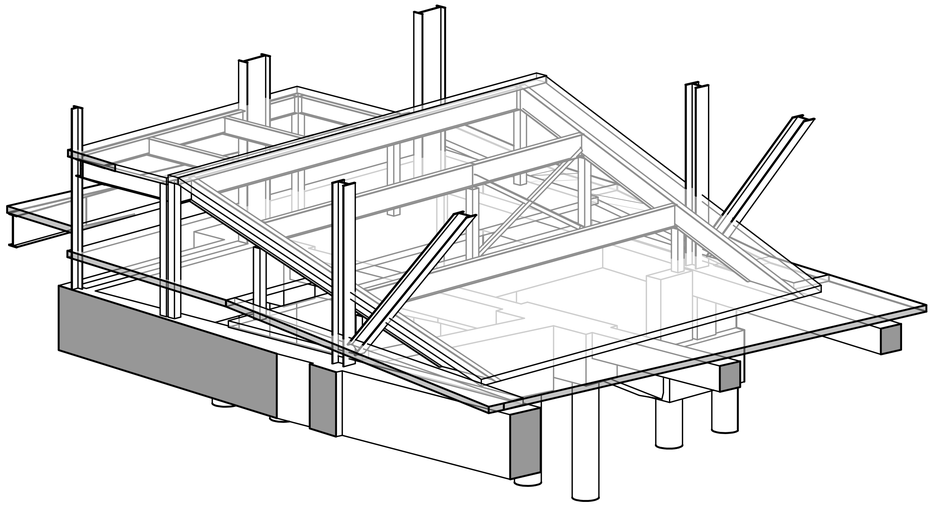

3 AUDITORIUM FRAMING - ISOMETRIC

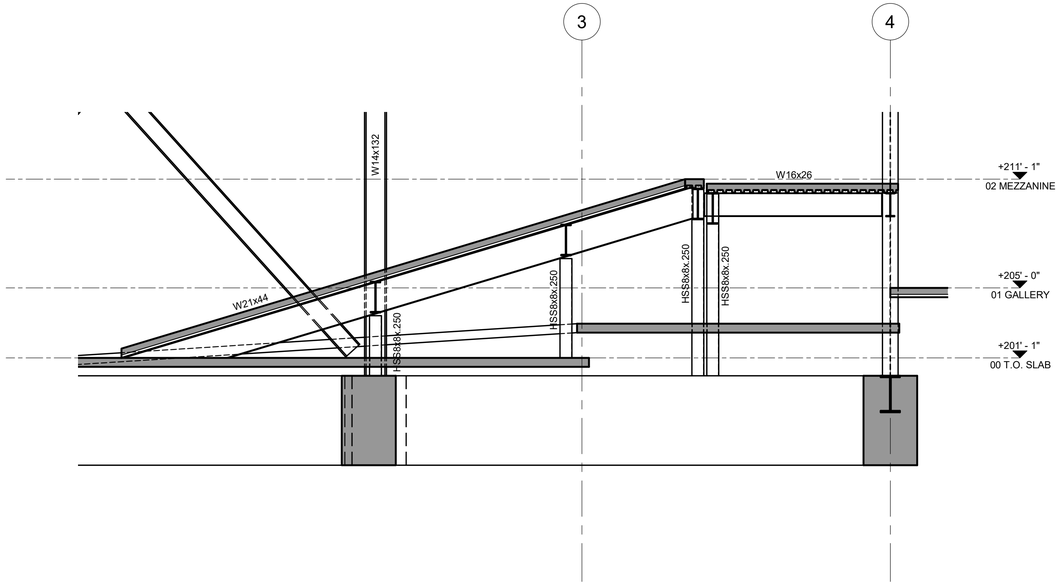

1 AUDITORIUM FRAMING - EAST
1/4" = 1'-0"

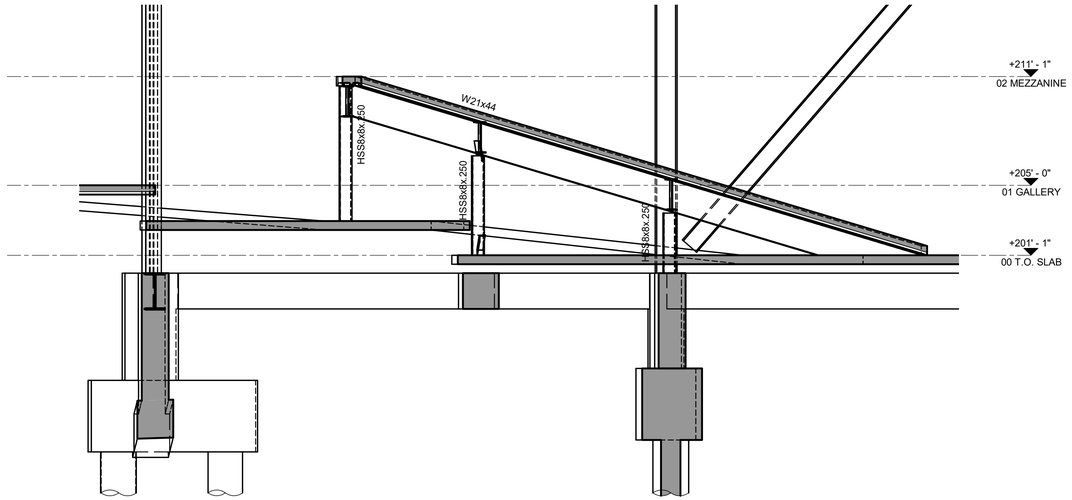

2 AUDITORIUM FRAMING - WEST
1/4" = 1'-0"

NOT FOR CONSTRUCTION

09.AUG.21

ba
belzberg architects
2321 MAIN STREET
SANTA MONICA, CA 90405
310.453.9611
www.belzbergarchitects.com

ARUP
Arup North America Ltd.
900 Wilshire Boulevard,
19th Floor
Los Angeles CA 90017
Tel: 310 578 4400
www.arup.com

#	DESCRIPTION	DATE

LEARNING CENTER
AUDITORIUM
SECTIONS

PROJECT NUMBER:

S331

8/10/2021 5:23:51 PM

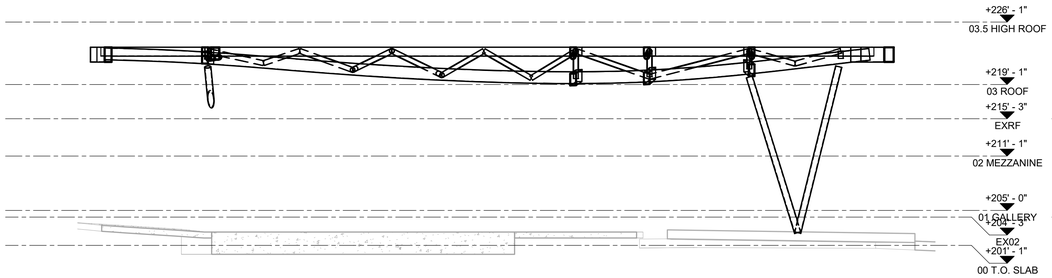

4 CANOPY ELEVATION AT SUPPORT
1/8" = 1'-0"

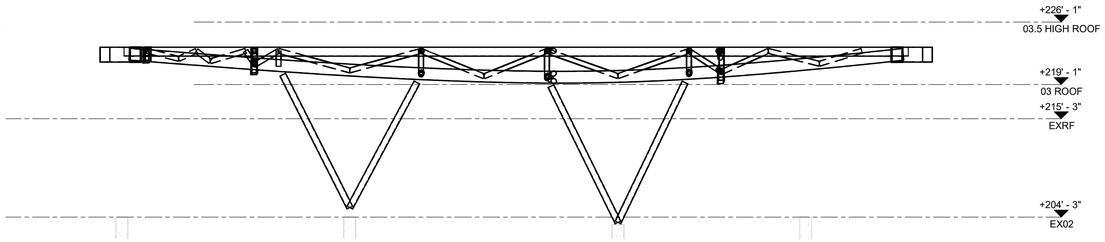

1 CANOPY ELEVATION AT SUPPORT
1/8" = 1'-0"

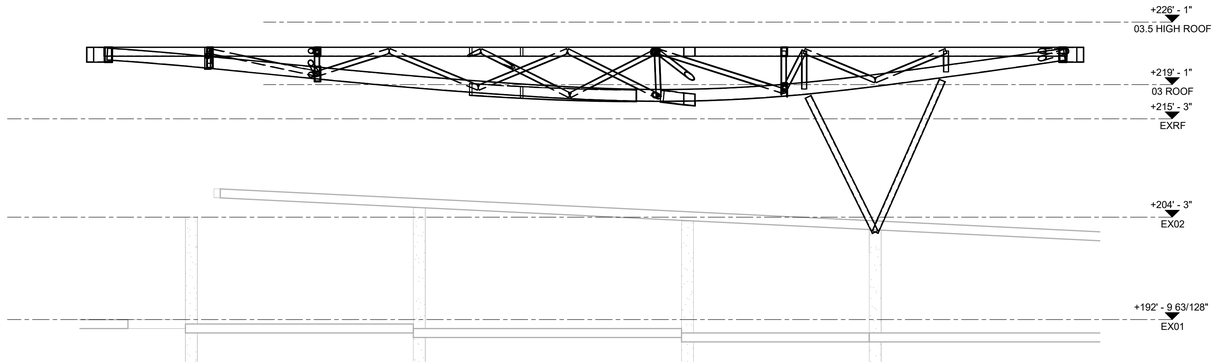

2 CANOPY ELEVATION AT SUPPORT
1/8" = 1'-0"

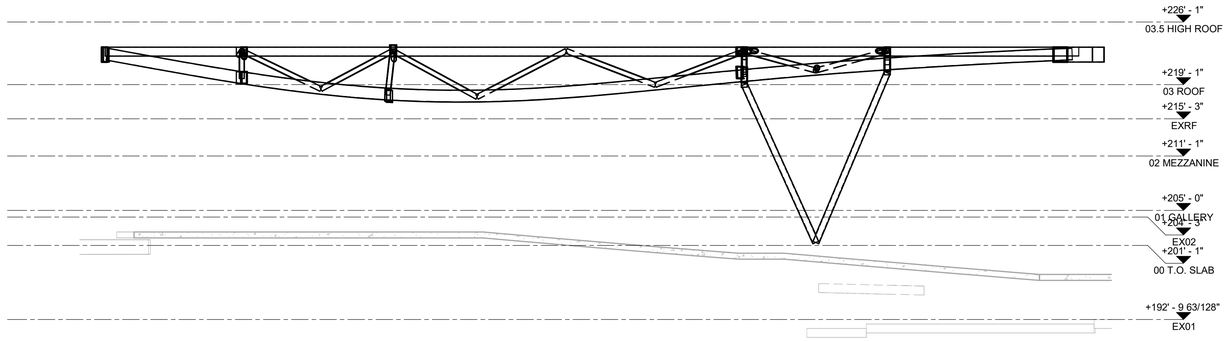

3 CANOPY ELEVATION AT SUPPORT
1/8" = 1'-0"

NOT FOR CONSTRUCTION

09.AUG.21

ba
belzberg architects
2321 MAIN STREET
SANTA MONICA, CA 90405
310.453.9611
www.belzbergarchitects.com

ARUP
Arup North America Ltd.
900 Wilshire Boulevard,
19th Floor
Los Angeles CA 90017
Tel: 310 578 4400
www.arup.com

#	DESCRIPTION	DATE

BOX CAR AND CANOPY ELEVATIONS

PROJECT NUMBER:

S332

8/10/2021 5:29:53 PM

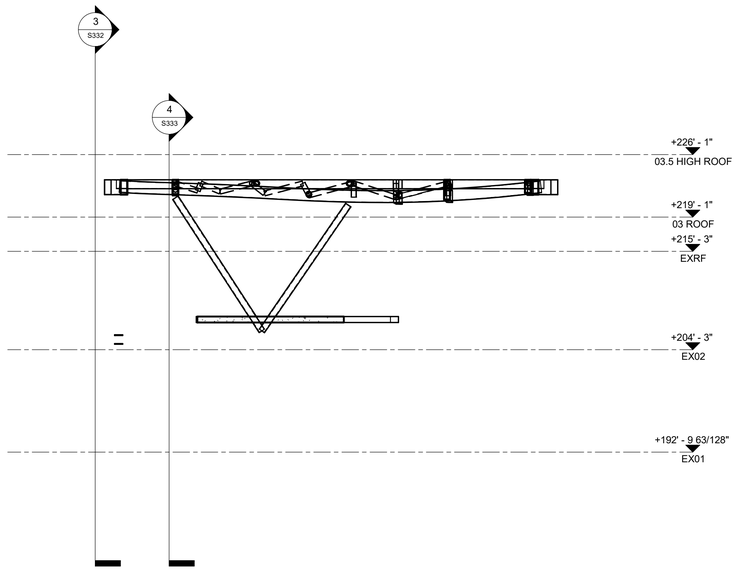

3 FRAMING ELEVATION
1/8" = 1'-0"

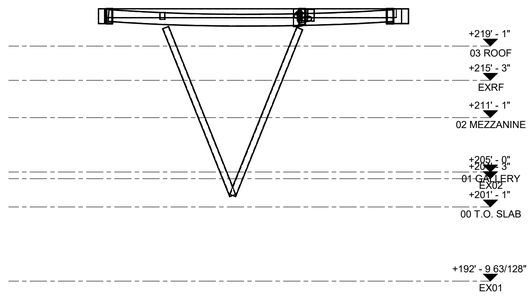

1 FRAMING ELEVATION
1/8" = 1'-0"

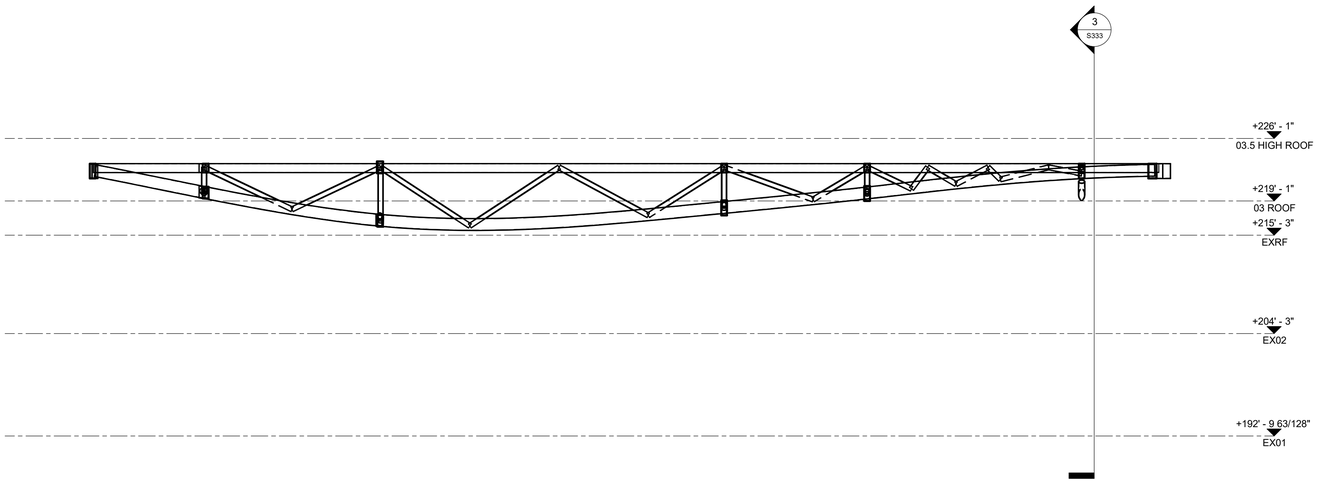

4 FRAMING ELEVATION
1/8" = 1'-0"

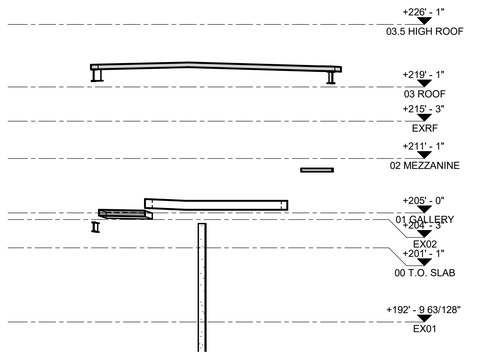

2 FRAMING ELEVATION
1/8" = 1'-0"

NOT FOR CONSTRUCTION

09.AUG.21

ba
belzberg architects
2321 MAIN STREET
SANTA MONICA, CA 90405
310.453.9611
www.belzbergarchitects.com

ARUP
Arup North America Ltd.
900 Wilshire Boulevard,
19th Floor
Los Angeles CA 90017
Tel: 310 578 4400
www.arup.com

#	DESCRIPTION	DATE

CANOPY ELEVATIONS

PROJECT NUMBER:

S333

8/10/2021 5:29:54 PM

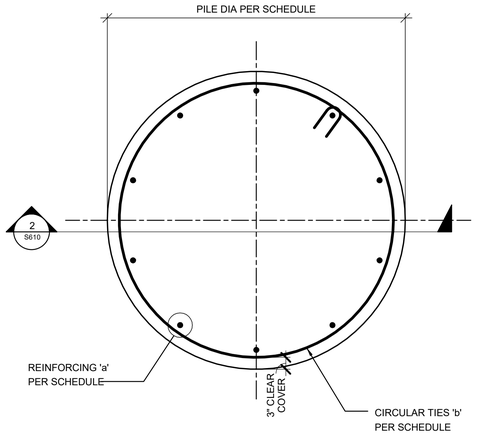

NOTES:

1. SEE 2/S610 OR 3/S610 FOR VERTICAL CROSS SECTION OF PILE.
2. REFER TO 6/S610 FOR REINFORCEING INFORMATION.
3. WHEN USING SPIRALS CONTRACTOR SHALL PROVIDE 1.5 ADDITIONAL TURNS OF SPIRALS AT TOP AND BOTTOM FOR ANCHORAGE.
4. WHEN USING SPIRALS PILES SHALL HAVE LAP SPLICE LENGTH NOT LESS THAN 48 x db WITH A MAXIMUM PITCH OF 1.5" ALONG THE SPLICE LENGTH.

5 TYPICAL PILE CROSS-SECTION

DRILLED PILE REINFORCING SCHEDULE							
PILE TYPE	PILE DIAMETER	BOTTOM OF PILE ELEVATION	REINFORCING 'a' ZONE 1	REINFORCING 'a' ZONE 2	REINFORCING 'b' ZONE 1	REINFORCING 'b' ZONE 2	NOTE
24A	24	TBC	(11) - #10	(6) - #10	#4 @ 6" O.C.	#4 @ 9" O.C.	
24B	24	TBC	(11) - #10	(6) - #10	#4 @ 6" O.C.	#4 @ 9" O.C.	
18A	18	TBC	(6) - #8	-	#4 @ 6" O.C.	-	
18B	18	TBC	(6) - #8	-	#4 @ 6" O.C.	-	

NOTES:

1. THE PILE TYPE IS CALLED OUT IN THE PILE CAP TAG. REFER TO THE PILE CAP SCHEDULE ON 1/S611 AND PILE CAP DRAWINGS ON S611 AND S612.

6 PILE SCHEDULE

12" = 1'-0"

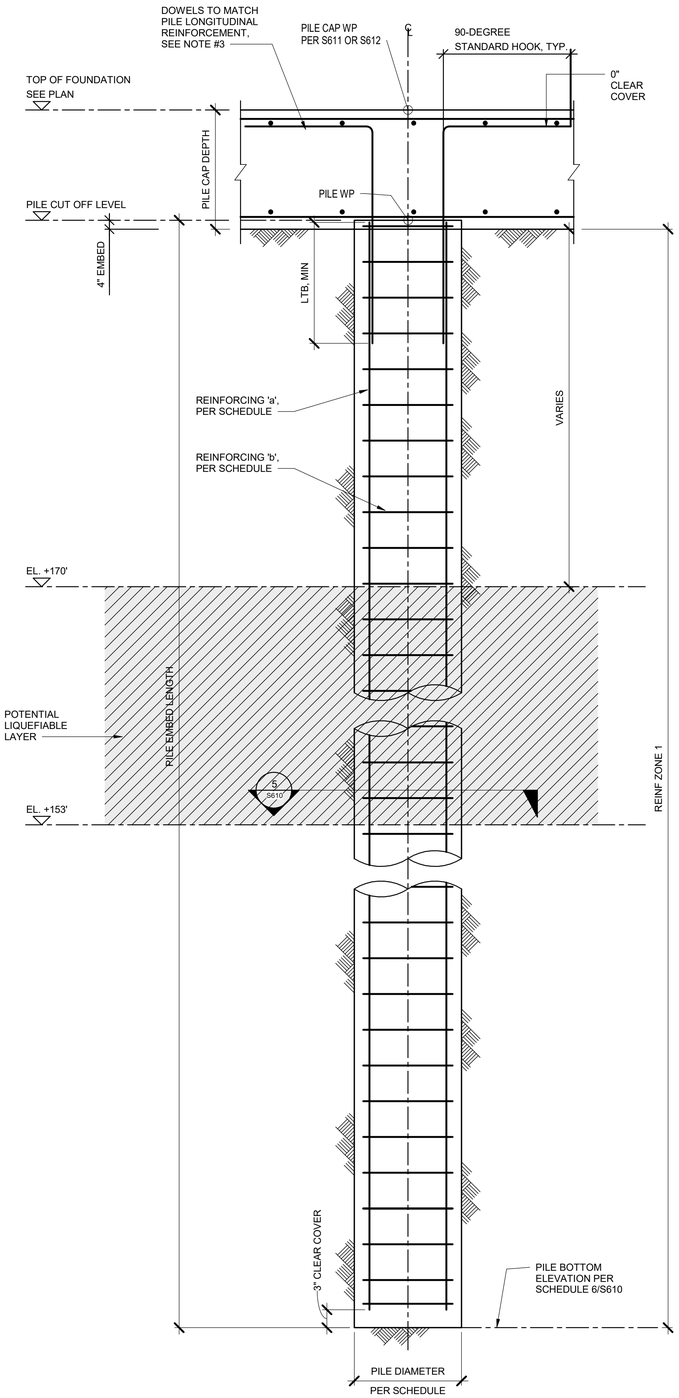

NOTES:

1. REFER TO PILE SCHEDULE ON 6/S610 FOR PILE AND REINFORCEMENT INFORMATION.
2. REFER TO DETAILS ON S611 AND S612 FOR PILE CAP INFORMATION.
3. AT CONTRACTOR'S OPTION REPLACE HOOKED DOWEL BARS WITH T-HEADED DOWEL BARS. T-HEADED BARS SHALL COMPLY WITH THE GENERAL NOTES. MINIMUM DEVELOPMENT LENGTH FOR T-HEADED BARS ARE GIVEN ON S620.
4. WHEN USING SPIRALS CONTRACTOR SHALL PROVIDE 1.5 ADDITIONAL TURNS OF SPIRALS AT TOP AND BOTTOM FOR ANCHORAGE.
5. WHEN USING SPIRALS PILES SHALL HAVE LAP SPLICE LENGTH NOT LESS THAN 48 x db WITH A MAXIMUM PITCH OF 1.5" ALONG THE SPLICE LENGTH.

4 TYPICAL 18" DIA PILE REINFORCEMENT

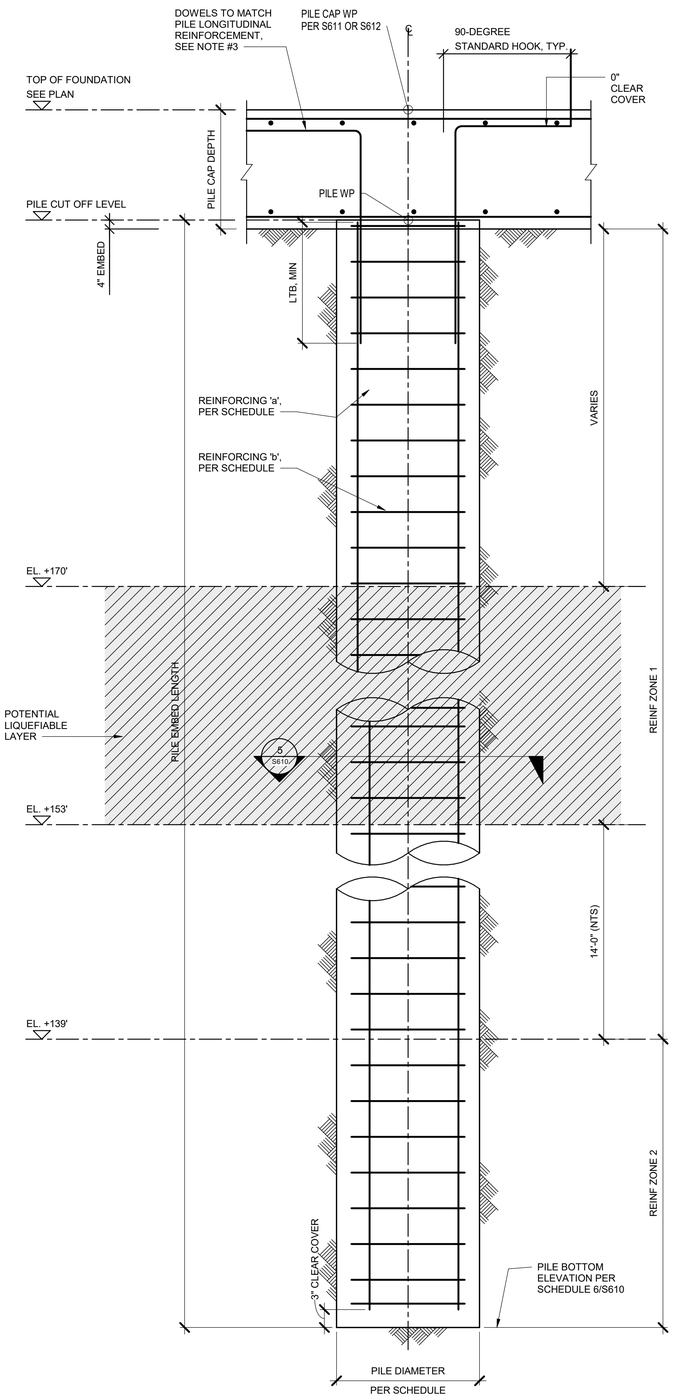

NOTES:

1. REFER TO PILE SCHEDULE ON 6/S610 FOR PILE AND REINFORCEMENT INFORMATION.
2. REFER TO DETAILS ON S611 AND S612 FOR PILE CAP INFORMATION.
3. AT CONTRACTOR'S OPTION REPLACE HOOKED DOWEL BARS WITH T-HEADED DOWEL BARS. T-HEADED BARS SHALL COMPLY WITH THE GENERAL NOTES. MINIMUM DEVELOPMENT LENGTH FOR T-HEADED BARS ARE GIVEN ON S620.
4. WHEN USING SPIRALS CONTRACTOR SHALL PROVIDE 1.5 ADDITIONAL TURNS OF SPIRALS AT TOP AND BOTTOM FOR ANCHORAGE.
5. WHEN USING SPIRALS PILES SHALL HAVE LAP SPLICE LENGTH NOT LESS THAN 48 x db WITH A MAXIMUM PITCH OF 1.5" ALONG THE SPLICE LENGTH.

2 TYPICAL 24" DIA PILE REINFORCEMENT

NOT FOR CONSTRUCTION

09.AUG.21

belzberg architects
2321 MAIN STREET
SANTA MONICA, CA 90405
310.453.9611
www.belzbergarchitects.com

ARUP
Arup North America Ltd.
900 Wilshire Boulevard,
19th Floor
Los Angeles CA 90017
Tel: 310 578 4400
www.arup.com

#	DESCRIPTION	DATE

STRUCTURAL PILE DETAILS

PROJECT NUMBER:

S610

8/10/2021 5:29:55 PM

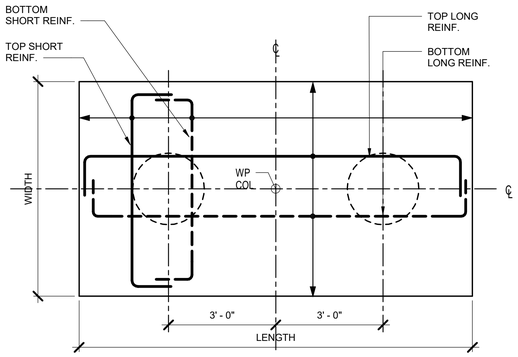

P-2-24A & P-2-24B

NOTE:

AT CONTRACTOR'S OPTION, MAY COMBINE T&B
REINF INTO CLOSED TIES OF SAME SIZE AND SPACING.

5 P-2* PILE CAP DETAIL

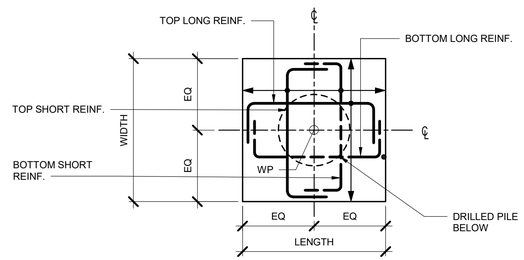

P-1-*

NOTE:

AT CONTRACTOR'S OPTION, MAY COMBINE T&B
REINF INTO CLOSED TIES OF SAME SIZE AND SPACING.

3 P-1* & P-2* PILE CAP DETAIL

PILE CAP SCHEDULE									
PILE CAP MARK (SEE NOTE)	PILE CAP DIMENSION			BOTTOM BARS		TOP BARS		SIDE BARS	DOWEL BAR FOR EACH SIDE
	LENGTH	WIDTH	THK.	LONG	SHORT	LONG	SHORT		
P-1-18A	2'-10"	2'-10"	3'-0"	TBC	TBC	TBC	TBC	TBC	TBC
P-1-24A	3'-4"	3'-4"	3'-0"	TBC	TBC	TBC	TBC	TBC	TBC
P-2-24A	9'-4"	3'-4"	4'-0"	TBC	TBC	TBC	TBC	TBC	TBC
P-2-24B	9'-4"	3'-4"	4'-0"	TBC	TBC	TBC	TBC	TBC	TBC
P-3-24B	9'-4"	8'-6"	3'-0"	TBC	TBC	TBC	TBC	TBC	TBC
P-4-24B	9'-4"	9'-4"	3'-0"	TBC	TBC	TBC	TBC	TBC	TBC

NOTES:

1. THE FIRST NUMBER IN THE PILE CAP TAG INDICATES THE NUMBER OF PILES.
2. THE SECOND NUMBER AND SECOND LETTER IN THE PILE TAG INDICATE THE PILE TYPE.
3. REFER TO SCHEDULE 6/S610 FOR PILE DIAMETER, LENGTH, AND REINFORCEMENT.
4. WORK THE ABOVE SCHEDULE WITH THE REINFORCEMENT DETAILS ON S611 AND S612.

1 PILE CAP SCHEDULE
12" = 1'-0"

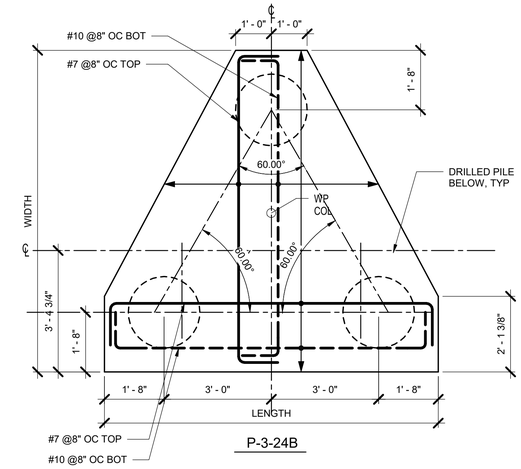

P-3-24B

6 P-3-24B PILE CAP DETAIL

NOTES:

1. SEE 2/S610 FOR INFORMATION NOT SHOWN.
2. CONTRACTOR SHALL LOCATE EXISTING BARS WITH NON-DESTRUCTIVE TESTING AND SHALL NOT DAMAGE EXISTING BARS DURING INSTALLION OF NEW BARS.
3. BARS EPOXIED INTO CONCRETE SHALL MAINTAIN THE MINIMUM EDGE DISTANCES PER ICC REPORT AND SHALL BE WITHIN THE REINFORCING CAGE OF THE FOOTING OR PILE CAP, UNO.
4. POST INSTALLED REINFORCING BAR SYSTEM PER GENERAL NOTES.
5. STIRRUPS, HOOPS OR SPIRALS IN COLUMN NOT SHOWN.
6. SEE X/SXX FOR CONSTRUCTION JOINT OF PILE CAP TO COLUMN AND TO SLAB ON GRADE.

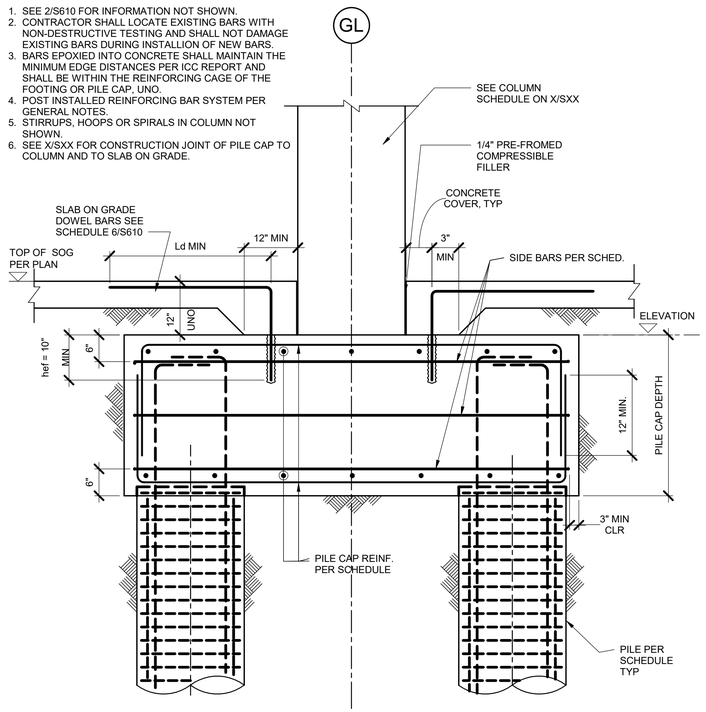

4 TYPICAL SECTION AT PILE CAP

NOTES:

1. SEE 2/S610 FOR INFORMATION NOT SHOWN.
2. CONTRACTOR SHALL LOCATE EXISTING BARS WITH NON-DESTRUCTIVE TESTING AND SHALL NOT DAMAGE EXISTING BARS DURING INSTALLION OF NEW BARS.
3. BARS EPOXIED INTO CONCRETE SHALL MAINTAIN THE MINIMUM EDGE DISTANCES PER ICC REPORT AND SHALL BE WITHIN THE REINFORCING CAGE OF THE FOOTING OR PILE CAP, UNO.
4. POST INSTALLED REINFORCING BAR SYSTEM PER GENERAL NOTES.
5. STIRRUPS, HOOPS OR SPIRALS IN COLUMN NOT SHOWN.
6. SEE X/SXX FOR CONSTRUCTION JOINT OF PILE CAP TO COLUMN AND TO SLAB ON GRADE.

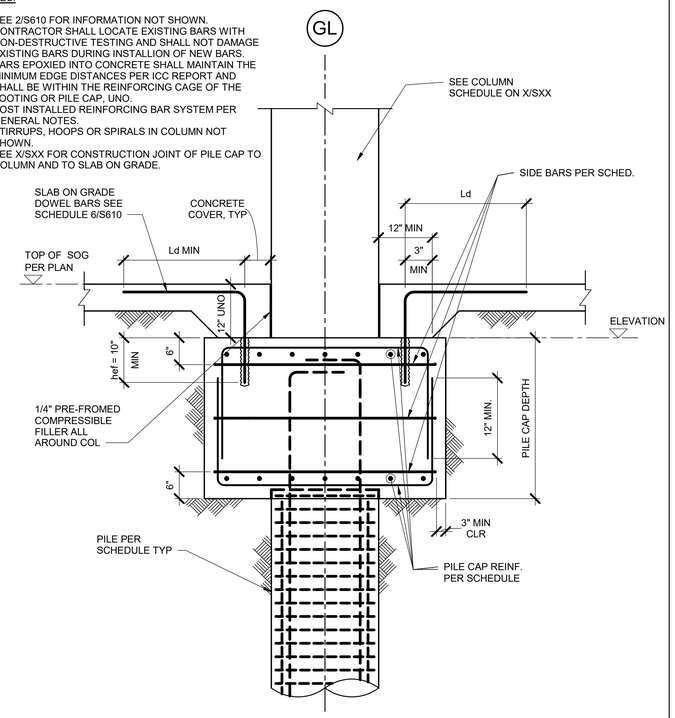

2 TYPICAL SECTION AT SINGLE PILE CAP

NOT FOR CONSTRUCTION

09.AUG.21

ba
belzberg architects
2321 MAIN STREET
SANTA MONICA, CA 90405
310.453.9611
www.belzbergarchitects.com

ARUP
Arup North America Ltd.
900 Wilshire Boulevard,
19th Floor
Los Angeles CA 90017
Tel: 310 578 4400
www.arup.com

#	DESCRIPTION	DATE

STRUCTURAL PILE CAP DETAILS

PROJECT NUMBER:

S611

8/10/2021 5:29:57 PM

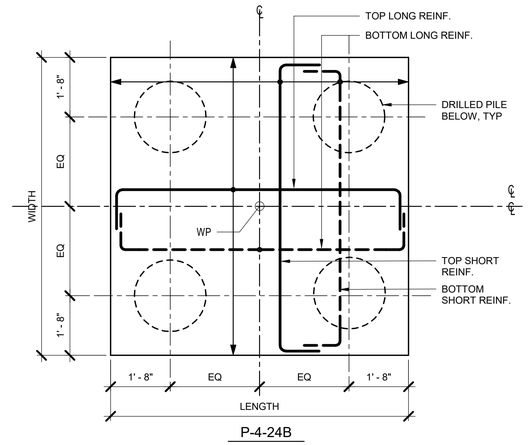

P-4-24B

1 P-4-24B PILE CAP DETAIL

NOT FOR CONSTRUCTION

09.AUG.21

belzberg architects
2321 MAIN STREET
SANTA MONICA, CA 90405
310.453.9611

www.belzbergarchitects.com

ARUP

Arup North America Ltd.
900 Wilshire Boulevard,
19th Floor
Los Angeles CA 90017
Tel: 310 578 4400
www.arup.com

#	DESCRIPTION	DATE

STRUCTURAL PILE CAP DETAILS

PROJECT NUMBER:

S612

8/10/2021 5:29:58 PM

HEADED BAR DEVELOPMENT LENGTH (Ldt) SCHEDULE (INCHES)				
BAR SIZE	f'c = 4000 psi	f'c = 5000 psi	f'c = 6000 psi	f'c = 8000 psi
# 3	6	6	6	6
# 4	8	7	7	7
# 5	10	9	8	8
# 6	12	11	10	10
# 7	14	12	11	11
# 8	16	14	13	13
# 9	18	16	14	14
# 10	20	18	16	16
# 11	22	20	18	18

NOTES:

1. REFERENCE CODE ACI 318. REFER TO THE GENERAL NOTES FOR THE VERSION OF THIS CODE.
2. THE ABOVE HEADED BAR DEVELOPMENT LENGTHS APPLY TO NORMAL WEIGHT CONCRETE ONLY.
3. THE ABOVE HEADED BAR DEVELOPMENT LENGTHS ARE FOR UNCOATED REINFORCEMENT. FOR EPOXY COATED BARS, MULTIPLY THE SPECIFIED DEVELOPMENT LENGTHS BY 1.2.
4. CLEAR COVER FOR BAR SHALL NOT BE LESS THAN 2db; AND CLEAR SPACING BETWEEN BARS SHALL NOT BE LESS THAN 4db.
5. BAR SIZE SHALL NOT EXCEED #11.
6. THE ABOVE BAR DEVELOPMENT LENGTHS ARE FOR REBARS Fy = 60 KSI. FOR OTHER GRADES, MULTIPLY THE SPECIFIED LENGTHS BY Fy/60 KSI. Fy SHALL NOT EXCEED 60 KSI FOR HEADED BARS.
7. THE ABOVE BAR DEVELOPMENT LENGTHS ARE CALCULATED USING THE 28-DAY CONCRETE COMPRESSIVE STRENGTH BASED ON CYLINDER SPECIMEN

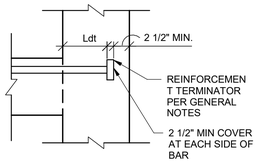

5 HEADED BAR DEVELOPMENT LENGTH (Ldt) SCHEDULE

HOOKED BAR DEVELOPMENT LENGTH (Ldh) SCHEDULE (INCHES)				
BAR SIZE	f'c = 4000 psi	f'c = 5000 psi	f'c = 6000 psi	f'c = 8000 psi
# 3	6	6	6	6
# 4	7	6	6	6
# 5	9	8	7	6
# 6	10	9	9	8
# 7	12	11	10	9
# 8	14	12	11	10
# 9	15	14	13	11
# 10	17	16	14	12
# 11	19	17	16	14

NOTES:

1. REFERENCE CODE ACI 318. REFER TO THE GENERAL NOTES FOR THE VERSION OF THIS CODE.
2. db INDICATES DIAMETER OF THE BAR.
3. Ldh SHALL NOT BE LESS THAN GREATER OF 8db AND 6 INCHES.
4. THE ABOVE BAR DEVELOPMENT LENGTHS APPLY TO NORMAL WEIGHT CONCRETE. DIVIDE 0.75 FOR LIGHTWEIGHT CONCRETE.
5. THE ABOVE BAR DEVELOPMENT LENGTHS ARE FOR UNCOATED REINFORCEMENT. FOR EPOXY COATED BARS, MULTIPLY THE SPECIFIED DEVELOPMENT LENGTHS BY 1.2
6. HOOKS SHALL NOT BE CONSIDERED EFFECTIVE IN DEVELOPING BARS IN COMPRESSION.
7. THE ABOVE HOOKED BAR DEVELOPMENT LENGTHS ARE FOR REBARS Fy = 60 KSI. FOR OTHER GRADES, MULTIPLY THE SPECIFIED LENGTHS BY Fy/60 KSI.
8. THE ABOVE HOOKED BAR DEVELOPMENT LENGTHS ARE CALCULATED USING THE 28-DAY CONCRETE COMPRESSIVE STRENGTH BASED ON CYLINDER SPECIMEN.

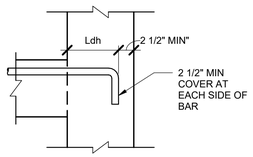

6 HOOKED BAR DEVELOPMENT LENGTH (Ldh) SCHEDULE

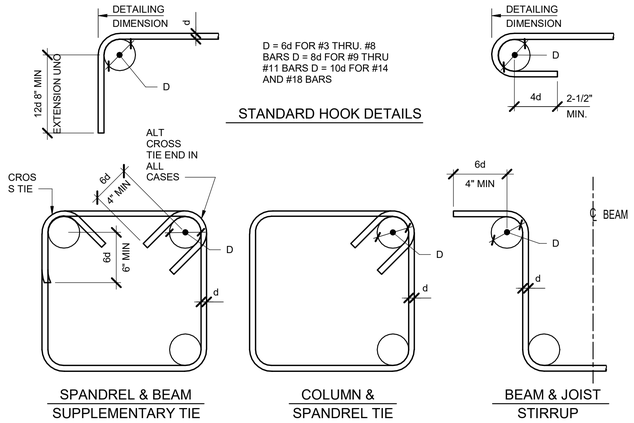

3 TYPICAL BAR BEND SCHEDULE

BAR DEVELOPMENT LENGTH IN COMPRESSION (Ldc) SCHEDULE (INCHES)				
BAR SIZE	f'c = 4000 psi	f'c = 5000 psi	f'c = 6000 psi	f'c = 8000 psi
# 3	8	7	7	7
# 4	10	9	9	9
# 5	12	12	12	12
# 6	15	14	14	14
# 7	17	16	16	16
# 8	19	18	18	18
# 9	22	21	21	21
# 10	25	23	23	23
# 11	27	26	26	26
# 14	33	31	31	31
# 18	43	41	41	41

NOTES:

1. REFERENCE CODE ACI 318. REFER TO THE GENERAL NOTES FOR THE VERSION OF THIS CODE.
2. THE ABOVE BAR DEVELOPMENT LENGTHS APPLY TO NORMAL WEIGHT CONCRETE. DIVIDE 0.75 FOR LIGHTWEIGHT CONCRETE.
3. THE ABOVE BAR DEVELOPMENT LENGTHS ARE FOR REBARS Fy = 60 KSI. FOR OTHER GRADES, MULTIPLY THE SPECIFIED LENGTHS BY Fy/60 KSI.
4. THE ABOVE BAR DEVELOPMENT LENGTHS ARE CALCULATED USING THE 28-DAY CONCRETE COMPRESSIVE STRENGTH BASED ON CYLINDER SPECIMEN.

4 BAR DEVELOPMENT LENGTH IN COMPRESSION (Ldc) SCHEDULE

CLASS "B" LAP SPLICE (LTB) SCHEDULE (INCHES)																
BAR SIZE	f'c = 4000 psi				f'c = 5000 psi				f'c = 6000 psi				f'c = 8000 psi			
	CONDITION 1		CONDITION 2		CONDITION 1		CONDITION 2		CONDITION 1		CONDITION 2		CONDITION 1		CONDITION 2	
	TOP BARS	OTHER BARS	TOP BARS	OTHER BARS	TOP BARS	OTHER BARS	TOP BARS	OTHER BARS	TOP BARS	OTHER BARS	TOP BARS	OTHER BARS	TOP BARS	OTHER BARS	TOP BARS	OTHER BARS
# 3	25	19	37	28	22	17	33	25	20	16	30	23	18	14	26	20
# 4	33	25	49	37	29	23	44	34	27	21	40	31	23	18	35	27
# 5	41	31	61	47	36	28	54	42	33	26	50	38	29	22	43	33
# 6	49	37	73	56	44	34	65	50	40	31	59	46	35	27	52	40
# 7	71	54	106	81	63	49	95	73	58	45	86	67	50	39	75	58
# 8	81	62	121	93	72	56	108	83	66	51	99	76	57	44	86	66
# 9	91	70	136	105	81	63	122	94	74	57	111	86	64	50	96	74
# 10	102	79	153	118	92	71	137	106	84	64	125	96	72	56	108	84
# 11	114	87	170	131	102	78	152	117	93	71	139	107	80	62	120	93

NOTES:

1. REFERENCE CODE ACI318. REFER TO THE GENERAL NOTES FOR THE VERSION OF THIS CODE.
2. LAP SPLICE LENGTH SHALL NOT BE LESS THAN 12 INCHES
3. db INDICATES DIAMETER OF BAR
4. TOP BARS ARE HORIZONTAL BARS WITH MORE THAN 12 INCHES OF CONCRETE CAST IN THE MEMBER BELOW THE REINFORCEMENT
5. DEFINITIONS OF "CONDITION 1" AND "CONDITION 2" SHALL BE AS FOLLOWS:

   CONDITION 1: WHEN EITHER ONE OF THE FOLLOWING SET IS SATISFIED:

   SET A: a) CLEAR BAR SPACING GREATER THAN OR EQUAL TO db

   b) CLEAR BAR COVER GREATER THAN OR EQUAL TO db

   c) TIES OR STIRRUPS THROUGHOUT Ld NOT LESS THAN THE CODE MINIMUM

   SET B: a) CLEAR BAR SPACING GREATER THAN OR EQUAL TO 2db

   b) CLEAR BAR COVER GREATER THAN OR EQUAL TO db

   CONDITION 2: USED WHERE CONDITION 1 IS NOT SATISFIED
6. THE ABOVE LAP SPLICE LENGTHS APPLY TO NORMAL WEIGHT CONCRETE. DIVIDE BY 0.75 FOR LIGHTWEIGHT CONCRETE
7. THE ABOVE LAP SPLICE LENGTHS ARE FOR UNCOATED REINFORCEMENT. FOR EPOXY COATED BARS, MODIFY THE LISTED VALUES PER FOLLOWING:

   a) CLEAR BAR COVER LESS THAN 3db OR CLEAR BAR SPACING LESS THAN 6db, MULTIPLY Ld VALUES OF "OTHER BARS" BY 1.5 AND Ld VALUES OF "TOP BARS" BY 1.31

   b) ALL OTHER CONDITIONS, MULTIPLY Ld BY 1.2
8. USE CLASS "B" SPLICES UNLESS NOTED OTHERWISE. CLASS "A" LAP SPLICES ARE PERMITTED WHEN THE AREA OF REINFORCEMENT PROVIDED IS AT LEAST TWICE THAT REQUIRED BY ANALYSIS OVER THE ENTIRE LENGTH OF THE SPLICE AND ONE HALF OR LESS OF THE TOTAL REINFORCEMENT IS SPLICED WITHIN THE REQUIRED LAP SPLICE. USE CLASS "A" WHERE SPECIFICALLY NOTED ON DRAWINGS.
9. FOR CLASS "A" SPLICES, USE SAME VALUES AS PER Ld.
10. WHEN SPLICING DIFFERENT SIZE BARS, SPLICE LENGTH SHALL BE THE LARGER OF THE Ld OF LARGER BAR OR LAP SPLICE LENGTH OF SMALLER BAR
11. AT CONCRETE WALLS, SPLICES IN HORIZONTAL REINFORCEMENTS SHALL BE STAGGERED, MINIMUM 24 INCHES APART AT ALTERNATING BARS
12. AT CONCRETE WALLS WITH TWO CURTAINS OF REINFORCEMENTS, SPLICES IN THE CURTAINS SHALL NOT OCCUR IN THE SAME LOCATION. STAGGER LAP SPLICES MINIMUM 24 INCHES APART
13. ALL WALL AND COLUMN TO FOOTING DOWELS SHALL HAVE CLASS "B" LAP SPLICES
14. LAP SPLICES SHALL NOT BE USED FOR BARS LARGER THAN #11
15. LAP SPLICES OF BARS IN A BUNDLE SHALL BE BASED ON THE LAP SPLICE LENGTH REQUIRED FOR INDIVIDUAL BARS WITHIN A BUNDLE. INCREASE 20 PERCENT FOR THREE-BAR BUNDLE, AND 33 PERCENT FOR FOUR-BAR BUNDLE. INDIVIDUAL BAR SPLICES WITHIN A BUNDLE SHALL NOT OVERLAP. ENTIRE BUNDLES SHALL NOT BE LAP SPLICED.
16. THE ABOVE LAP SPLICE LENGTHS ARE FOR REBARS Fy = 60 KSI. FOR OTHER GRADES, MULTIPLY THE SPECIFIED LENGTHS BY Fy/60 KSI.
17. THE ABOVE LAP SPLICE LENGTHS ARE CALCULATED USING THE 28-DAY CONCRETE COMPRESSIVE STRENGTH BASED ON CYLINDER SPECIMEN

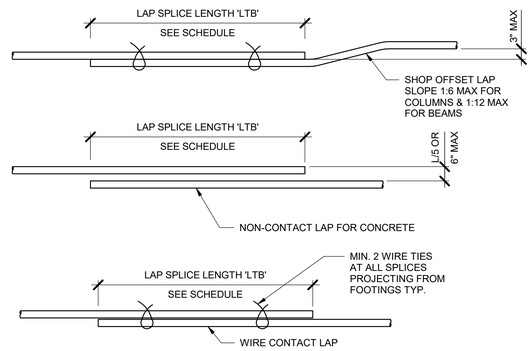

2 TENSION LAP SPLICE LENGTH (LTB) SCHEDULE

NTS

NOT FOR CONSTRUCTION

09.AUG.21

belzberg architects
2321 MAIN STREET
SANTA MONICA, CA 90405
310.453.9611
www.belzbergarchitects.com

ARUP
Arup North America Ltd.
900 Wilshire Boulevard,
19th Floor
Los Angeles CA 90017
Tel: 310 578 4400
www.arup.com

#	DESCRIPTION	DATE

REINFORCED SCHEDULE LAP AND DEVELOPMENT LENGTH SCHEDULE

PROJECT NUMBER:

S620

8/10/2021 5:30:02 PM

BAR DEVELOPMENT LENGTH (Ld) SCHEDULE (INCHES)																
BAR SIZE	f'c = 4000 psi				f'c = 5000 psi				f'c = 6000 psi				f'c = 8000 psi			
	CONDITION 1		CONDITION 2		CONDITION 1		CONDITION 2		CONDITION 1		CONDITION 2		CONDITION 1		CONDITION 2	
	TOP BARS	OTHER BARS	TOP BARS	OTHER BARS	TOP BARS	OTHER BARS	TOP BARS	OTHER BARS	TOP BARS	OTHER BARS	TOP BARS	OTHER BARS	TOP BARS	OTHER BARS	TOP BARS	OTHER BARS
# 3	19	15	28	22	17	13	25	20	16	12	23	18	16	12	20	16
# 4	25	19	37	29	23	17	34	26	21	16	31	24	18	14	27	21
# 5	31	24	47	36	28	22	42	32	26	20	38	30	22	17	33	26
# 6	37	29	56	43	34	26	50	39	31	24	46	35	27	21	40	31
# 7	54	42	81	63	49	38	73	56	45	34	67	51	39	30	58	45
# 8	62	48	93	72	56	43	83	64	51	39	76	59	44	34	66	51
# 9	70	54	105	81	63	48	94	72	57	44	86	66	50	38	74	57
# 10	79	61	118	91	71	54	106	81	64	50	96	74	56	43	84	64
# 11	87	67	131	101	78	60	117	90	71	55	107	82	62	48	93	71
# 14	105	81	157	121	94	72	141	108	86	66	128	99	74	57	111	86
# 18	140	108	209	161	125	96	187	144	114	88	171	132	99	76	148	114

NOTES:

1. REFERENCE CODE ACI318. REFER TO THE GENERAL NOTES FOR THE VERSION OF THIS CODE.
2. Ld SHALL NOT BE LESS THAN 12 INCHES.
3. db INDICATES DIAMETER OF BAR.
4. TOP BARS ARE HORIZONTAL BARS WITH MORE THAN 12 INCHES OF CONCRETE CAST IN THE MEMBER BELOW THE REINFORCEMENT.
5. DEFINITIONS OF "CONDITION 1" AND "CONDITION 2" SHALL BE AS FOLLOWS:

   CONDITION 1: WHEN EITHER ONE OF THE FOLLOWING SET IS SATISFIED:

   SET A: a) CLEAR BAR SPACING GREATER THAN OR EQUAL TO db

   b) CLEAR BAR COVER GREATER THAN OR EQUAL TO db

   c) TIES OR STIRRUPS THROUGHOUT Ld NOT LESS THAN THE CODE MINIMUM

   SET B: a) CLEAR BAR SPACING GREATER THAN OR EQUAL TO 2db

   b) CLEAR BAR COVER GREATER THAN OR EQUAL TO db

   CONDITION 2: USED WHERE CONDITION 1 IS NOT SATISFIED
6. THE ABOVE BAR DEVELOPMENT LENGTHS APPLY TO NORMAL WEIGHT CONCRETE. DIVIDE BY 0.75 FOR LIGHTWEIGHT CONCRETE. SEE REQUIREMENTS IN ACI 318 FOR LIGHTWEIGHT CONCRETE.
7. THE ABOVE BAR DEVELOPMENT LENGTHS ARE FOR UNCOATED REINFORCEMENT. FOR EPOXY COATED BARS, MODIFY THE LISTED VALUES PER FOLLOWING:

   a) SEE REQUIREMENTS IN ACI 318 FOR EPOXY COATED BARS.

   b) CLEAR BAR COVER LESS THAN 3db OR CLEAR BAR SPACING LESS THAN 6db, MULTIPLY Ld VALUES OF "OTHER BARS" BY 1.5 AND Ld VALUES OF "TOP BARS" BY 1.31

   c) ALL OTHER CONDITIONS, MULTIPLY Ld BY 1.2
8. THE ABOVE BAR DEVELOPMENT LENGTHS ARE FOR REBARS Fy = 60 KSI. FOR OTHER GRADES, MULTIPLY THE SPECIFIED LENGTHS BY Fy/60 KSI.
9. THE ABOVE BAR DEVELOPMENT LENGTHS ARE CALCULATED USING THE 28-DAY CONCRETE COMPRESSIVE STRENGTH BASED ON CYLINDER SPECIMEN.

3 BAR DEVELOPMENT (Ld) SCHEDULE

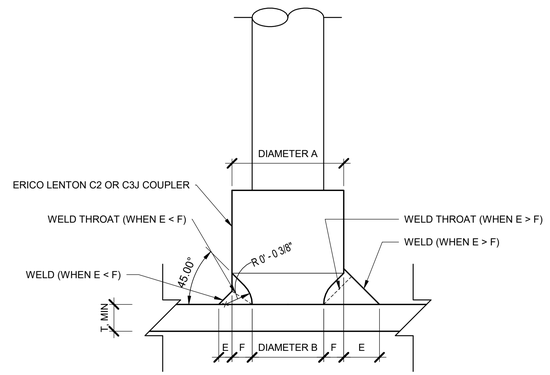

REBAR SIZE	COUPLER	REBAR GRADE	DIAMETER A	DIAMETER B	FILLET WELD, E	WELD ELECTRODE	MIN PLATE THK, T	PLATE GRADE
#4	EL12C2	A615-60	3/4"	7/16"	3/16"	E80XX	3/8"	A572-50
#5	EL16C2	A615-60	1"	9/16"	3/16"	E80XX	3/8"	A572-50
#6	EL20C3J	A615-60	1-1/4"	7/8"	1/4"	E80XX	3/8"	A572-50
#7	EL22C3J	A615-60	1-1/4"	3/4"	5/16"	E80XX	3/8"	A572-50
#8	EL25C3J	A615-60	1-9/16"	1"	5/16"	E80XX	3/8"	A572-50
#9	EL28C3J	A615-60	1-9/16"	15/16"	7/16"	E80XX	3/8"	A572-50
#10	EL32C3J	A615-60	2"	15/16"	3/16"	E80XX	3/8"	A572-50
#11	EL36C3J	A615-60	2"	1-1/8"	1/2"	E80XX	3/8"	A572-50

NOTES:

1. WELD SIZES ARE FOR TYPE II COUPLERS PER ACI318 AND SHALL BE USED WITH ERICO LENTON C2 AND C3J COUPLERS ONLY.
2. WELDS SHALL BE IN ACCORDANCE WITH AWS D1.1
3. BUTT WELD LENGTH 'F' EQUALS (A-B)/2

4 TYPICAL WELD TO LENTON C2 OR C3J

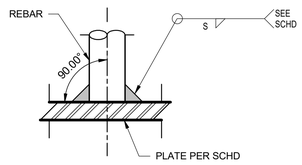

REBAR BUTT WELD SCHEDULE					
REBAR SIZE	REBAR GRADE	WELD SIZE, S	WELD ELECTRODE	MIN PLATE THK, T	PLATE GRADE
#3	A706-60	3/16"	E80XX	1/4"	A572-50
#4	A706-60	1/4"	E80XX	1/4"	A572-50
#5	A706-60	5/16"	E80XX	3/8"	A572-50
#6	A706-60	3/8"	E80XX	3/8"	A572-50
#7	A706-60	7/16"	E80XX	1/2"	A572-50
#8	A706-60	1/2"	E80XX	1/2"	A572-50
#9	A706-60	9/16"	E80XX	5/8"	A572-50
#10	A706-60	5/8"	E80XX	5/8"	A572-50
#11	A706-60	11/16"	E80XX	3/4"	A572-50

NOTES:

1. WHERE MIN PL THK IN TABLE ABOVE EXCEEDS THAT SHOWN ON REFERENCING DETAIL, INCREASE PL THK TO MATCH MIN PL THK IN SCHEDULE.
2. WELDS SHALL BE IN ACCORDANCE WITH AWS D1.1 AND D1.4.
3. REBAR BUTT WELD MAY BE USED IN LIEU OF WELDABLE HALF COUPLERS AT CONTRACTOR'S OPTION IN ALL DETAILS, UNLESS EXPRESSLY EXCLUDED.

2 REBAR BUTT WELD TO EMBED

NOT FOR CONSTRUCTION

09.AUG.21

belzberg architects
2321 MAIN STREET
SANTA MONICA, CA 90405
310.453.9611
www.belzbergarchitects.com

ARUP
Arup North America Ltd.
900 Wilshire Boulevard,
19th Floor
Los Angeles CA 90017
Tel: 310 578 4400
www.arup.com

#	DESCRIPTION	DATE

REINFORCED SCHEDULE LAP AND DEVELOPMENT LENGTH SCHEDULE

PROJECT NUMBER:

S621

8/10/2021 5:30:05 PM

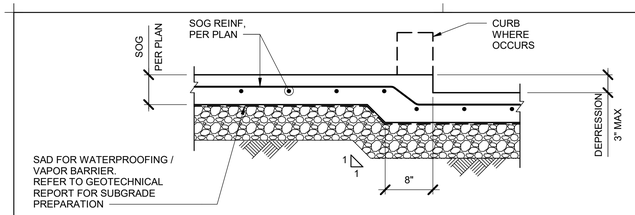

A -- DEPRESSION/STEP 3" MAX

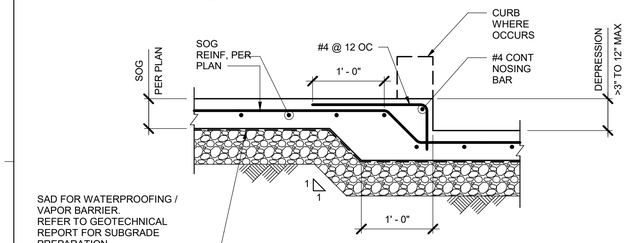

B -- DEPRESSION/STEP >3" TO 12" MAX

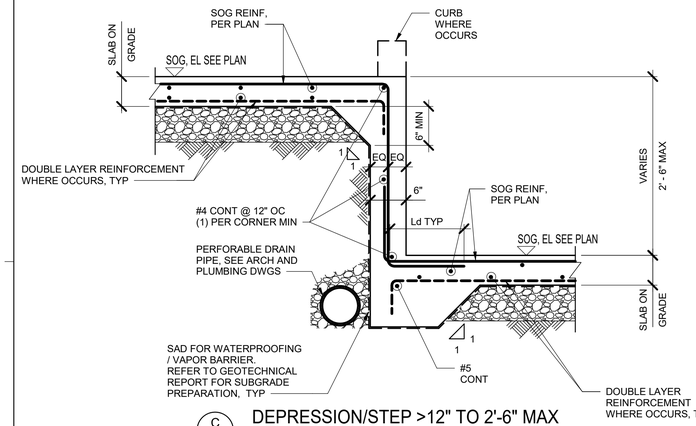

C -- DEPRESSION/STEP >12" TO 2'-6" MAX

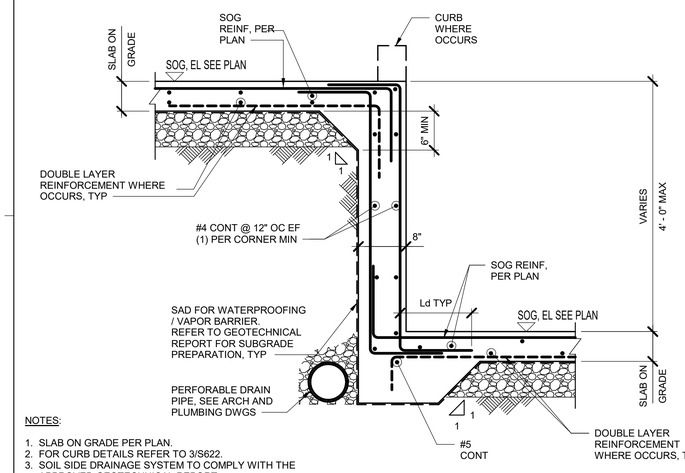

NOTES:

1. SLAB ON GRADE PER PLAN.
2. FOR CURB DETAILS REFER TO 3/S622.
3. SOIL SIDE DRAINAGE SYSTEM TO COMPLY WITH THE APPROVED GEOTECHNICAL REPORT.

D -- DEPRESSION/STEP >2'-6"" TO 4'-0" MAX

6 SLAB ON GRADE DEPRESSION

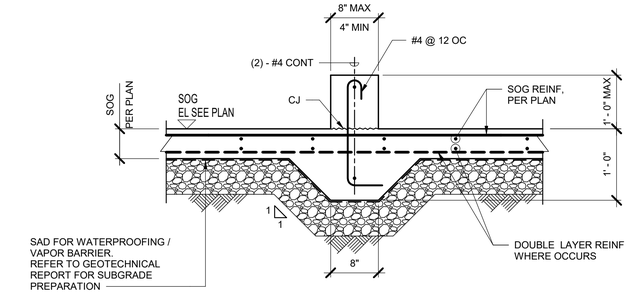

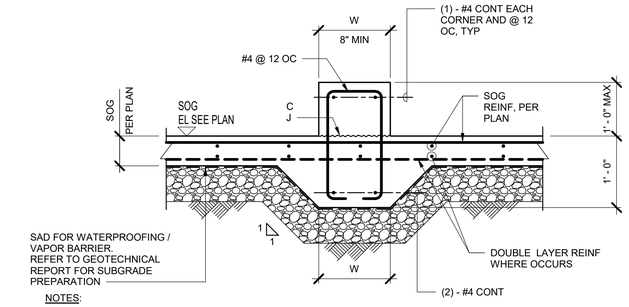

NOTES:

1. SLAB ON GRADE PER PLAN.
2. SEE ARCHITECTURAL DRAWINGS FOR LOCATION AND HEIGHT OF CURB.

3 CONCRETE CURB ON GRADE

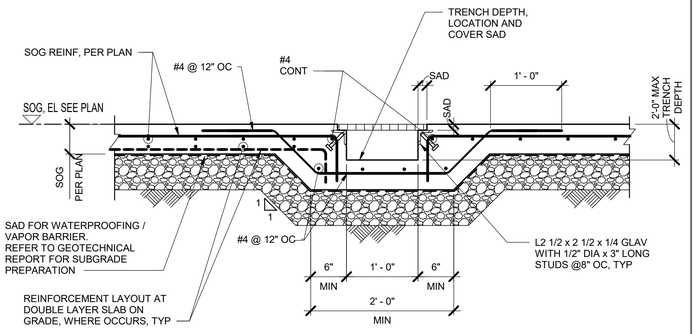

NOTES:

1. SLAB ON GRADE PER PLAN.

4 SLAB ON GRADE DRAINAGE TRENCH DETAIL

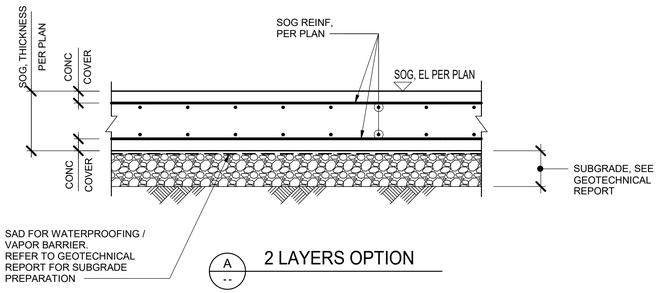

A -- 2 LAYERS OPTION

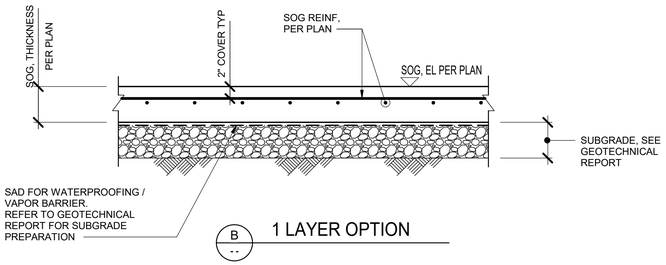

B -- 1 LAYER OPTION

NOTES:

1. SEE PLAN FOR SLAB THICKNESS AND REINFORCING.
2. SEE GEOTECHNICAL REPORT FOR SLAB ON GRADE SUPPORT, COMPACTION AND SUBGRADE PREPARATION.
3. REINFORCEMENT TO EXTEND TO WITHIN 2 IN OF THE SLAB SIDE EDGE. ALSO REFER TO SLAB EDGE DETAILS.

1 SLAB ON GRADE

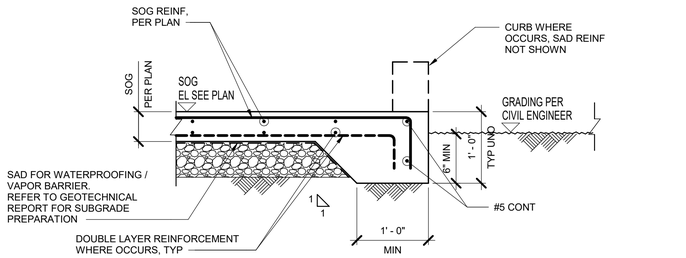

A -- AT GRADING

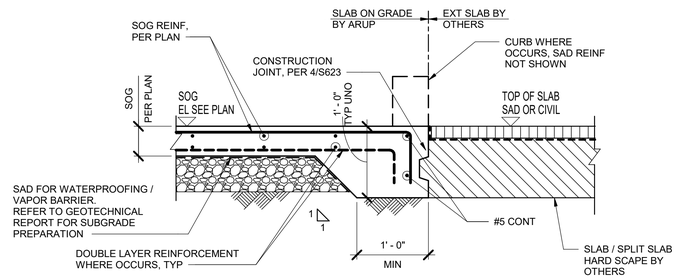

B -- AT EXTERIOR SLAB

NOTES:

1. SLAB ON GRADE PER PLAN.
2. CURB LOCATION AND HEIGHT SEE ARCH.
3. GRADING ELEVATION, EXTERIOR SLABS ETC. SEE CIVIL DRAWINGS.

2 SLAB ON GRADE EDGE CONDITION

NOT FOR CONSTRUCTION

09.AUG.21

belzberg architects
2321 MAIN STREET
SANTA MONICA, CA 90405
310.453.9611
www.belzbergarchitects.com

ARUP
Arup North America Ltd.
900 Wilshire Boulevard,
19th Floor
Los Angeles CA 90017
Tel: 310 578 4400
www.arup.com

#	DESCRIPTION	DATE

TYPICAL SLAB ON GRADE DETAILS

PROJECT NUMBER:

S622

8/10/2021 5:30:08 PM

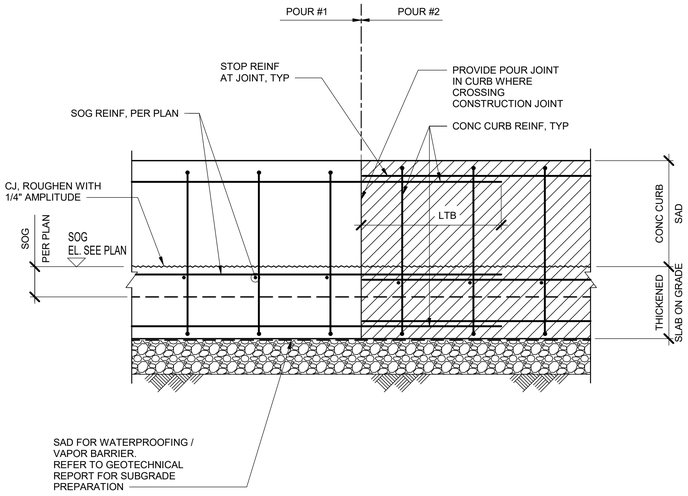

NOTES:

1. SLAB ON GRADE PER PLAN.
2. CURBS PER 3/S622.
3. CONSTRUCTION JOINT SIMILIAR TO 4/S623.

5 CONSTRUCTION JOINT AT CURB

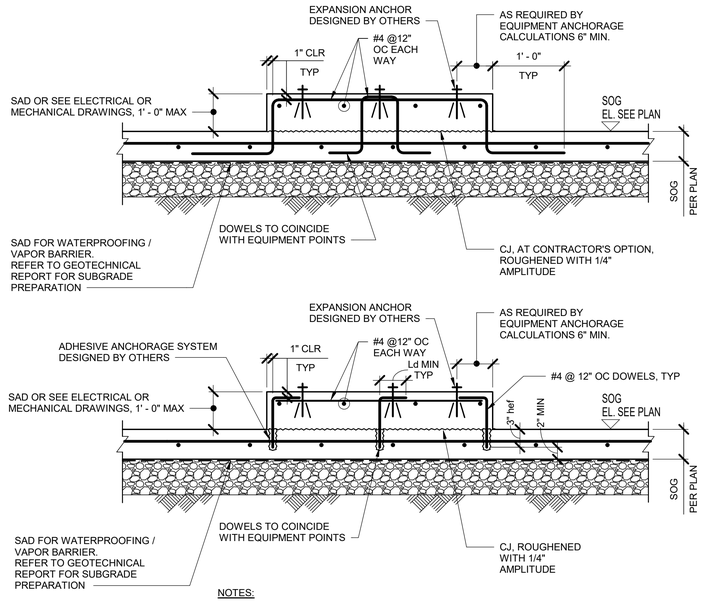

NOTES:

1. SLAB ON GRADE PER PLAN.
2. ANCHORAGE TO PAD AND DOWELS TO SLAB DESIGNED BY ANCHORAGE ENGINEER. DOWEL REINF SHOWN IS MINIMUM AND NEEDS TO BE CONFIRMED FOR ACTUAL EQUIPMENT LOADS.
3. ADHESIVE ANCHORAGE SYSTEM PER GENERAL NOTES.
4. PAD SIZE AND LOCATION SHALL TAKE INTO ACCOUNT MINIMUM REQUIREMENTS SUCH AS DISTANCES OF ANCHORAGE SOLUTION.
5. CONTRACTOR SHALL NOT DAMAGE EXISTING REINFORCEMENT IN SLAB.
6. DETAIL FOR SLAB ON GRADE WITH DOUBLE LAYER REINFORCEMENT SHALL BE SIMILAR.

3 HOUSEKEEPING PAD AND BUILT-UP SLAB ON SLAB ON GRADE

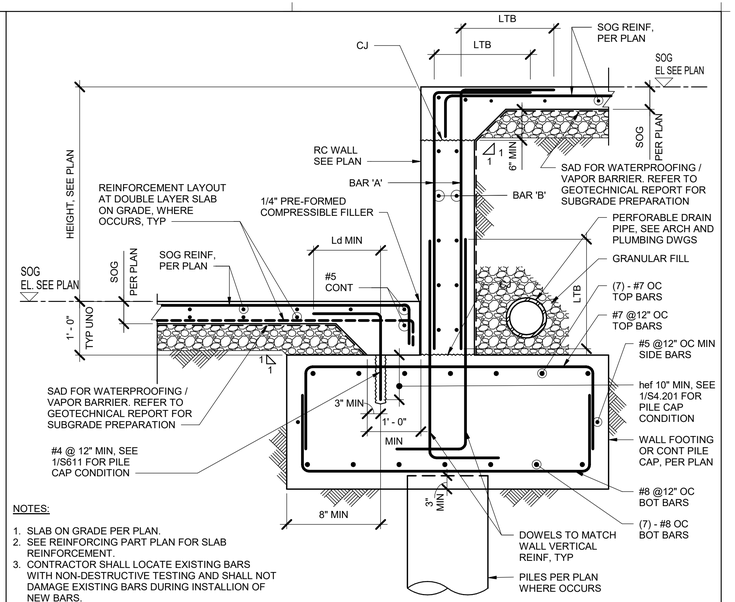

NOTES:

1. SLAB ON GRADE PER PLAN.
2. SEE REINFORCING PART PLAN FOR SLAB REINFORCEMENT.
3. CONTRACTOR SHALL LOCATE EXISTING BARS WITH NON-DESTRUCTIVE TESTING AND SHALL NOT DAMAGE EXISTING BARS DURING INSTALLION OF NEW BARS.
4. BARS EPOXIED INTO CONCRETE SHALL MAINTAIN THE MINIMUM EDGE DISTANCES PER ICC REPORT AND SHALL BE WITHIN THE REINFORCEING CAGE OF THE FOOTING OR PILE CAP, UNO.
5. POST INSTALLED REINFORCEING BAR SYSTEM PER GENERAL NOTES.
6. SOIL SIDE DRAINAGE SYSTEM TO COMPLY WITH THE APPROVED GEOTECHNICAL REPORT.
7. UNLESS NOTED OTHERWISE THIS DETAIL SHALL APPLY STEPS LARGER THAN 4 FEET.
8. SEE X/SXXX FOR FIELD TRAY RETAINING WALLS

STEP HEIGHT	WALL THICKNESS	VERTICAL REINFORCEMENT	HORIZONTAL REINFORCEMENT
		BAR A	BAR B
UP TO 6 FT	12"	#6 @12" EF OC	#5 @12" EF OC
UP TO 8 FT	12"	#6 @8" EF OC	#5 @8" EF OC
UP TO 11 FT	18"	#6 @8" EF OC	#5 @8" EF OC

1 SLAB ON GRADE STEP

SLAB THICKNESS	CONTROL JOINT SPACING
5"	12' - 0" OC MAX EACH BAY
8"	15' - 0" OC MAX EACH BAY

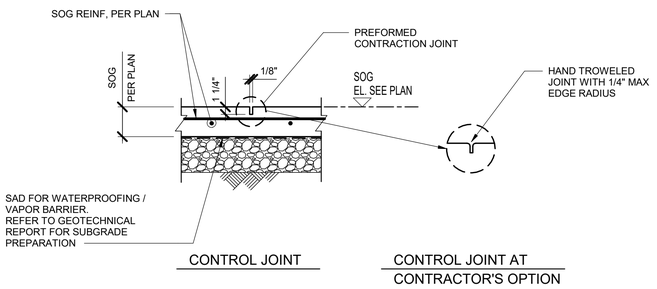

NOTES:

1. SLAB ON GRADE PER PLAN.
2. ALL SAW CUT / TROWELED JOINTS NEED TO BE DONE WITHIN 24 HOURS OF SLAB BEING POURED.
3. CONTROL JOINTS SHALL BE SPACED PER SCHEDULE. THE AREA BOUNDED BY CONTROL JOINTS OR CONSTRUCTION JOINTS SHALL NOT EXCEED 225 SQ FT WITH ASPECT RATIO OF SLAB PANELS BEING A MAXIMUM OF 1.2 TO 1.
4. DETAIL FOR SLAB ON GRADE WITH DOUBLE LAYER REINFORCEMENT SHALL BE SIMILAR.

6 SLAB ON GRADE CONTROL JOINT DETAIL

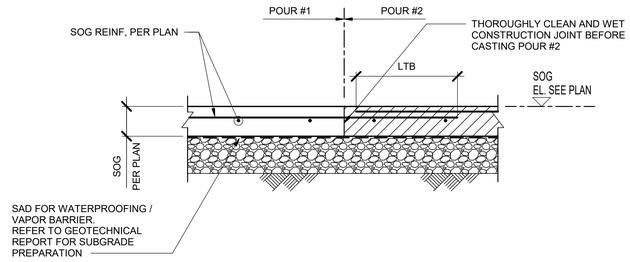

NOTES:

1. SLAB ON GRADE PER PLAN.
2. ALL CONSTRUCTION JOINTS IN SLAB ON GRADE SHALL BE PER THIS DETAIL.
3. DETAIL FOR SLAB ON GRADE WITH DOUBLE LAYER REINFORCEMENT SHALL BE SIMILAR.

4 SLAB ON GRADE CONSTRUCTION JOINTS

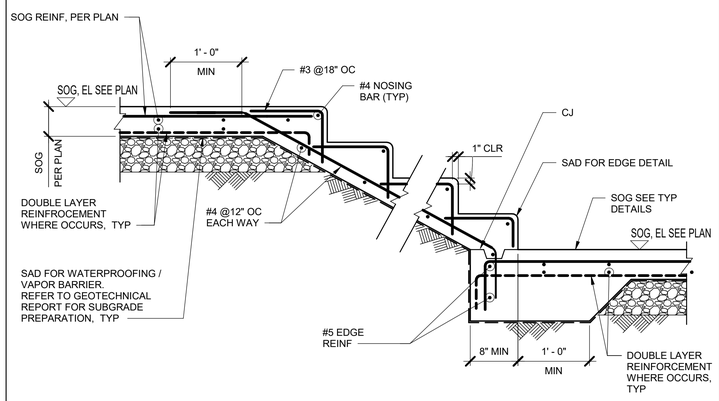

NOTES:

1. SLAB ON GRADE PER PLAN.
2. SEE ARCHITECTURAL DRAWINGS FOR STAIR GEOMETRY AND STEP DETAILS.
3. CONSTRUCTION JOINT DETAIL PER 4/S623.

2 TYPICAL STEPS ON GRADE

NOT FOR CONSTRUCTION

09.AUG.21

belzberg architects
2321 MAIN STREET
SANTA MONICA, CA 90405
310.453.9611
www.belzbergarchitects.com

ARUP
Arup North America Ltd.
900 Wilshire Boulevard,
19th Floor
Los Angeles CA 90017
Tel: 310 578 4400
www.arup.com

#	DESCRIPTION	DATE

TYPICAL SLAB ON GRADE DETAILS

PROJECT NUMBER:

S623

8/10/2021 5:30:11 PM

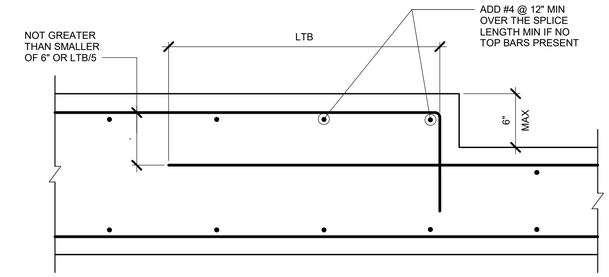

5 SLAB DEPRESSIONS/ STEPS - 6" MAX

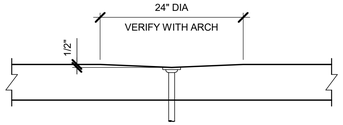

3 DEPRESSION AT FLOOR DRAIN

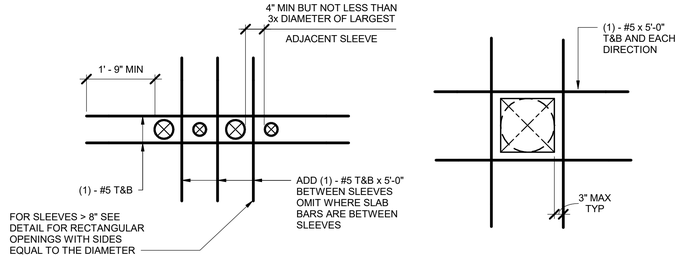

NOTES:

1. SEE CONCRETE GENERAL NOTES FOR MINIMUM COVER AND OTHER DETAILING REQUIREMENTS.

1 OPENINGS IN SLABS AND SLAB ON GRADE

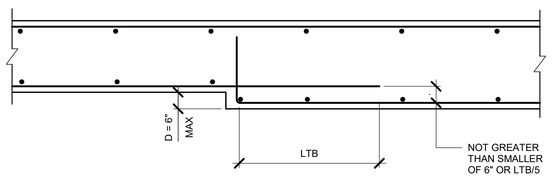

6 SLAB THICKNESS CHANGE

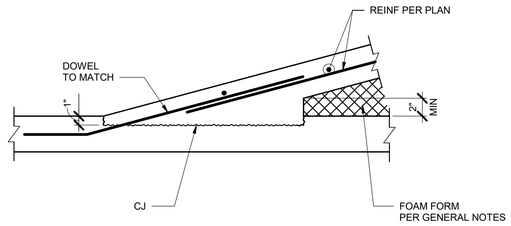

NOTE:

1. SLAB REINF NOT SHOWN.

4 RAMP TO SLAB DETAIL

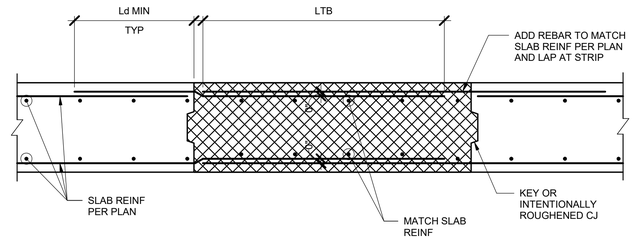

NOTES:

1. TOP SLAB REINF PERPENDICULAR TO STRIP NOT SHOWN. SPLICE ALL PERPENDICULAR REINFORCEMENT LTB AT STRIP, WHERE OCCURS.
2. POUR STRIPS ARE INTENDED TO BE THE LAST CONCRETE CAST BETWEEN ADJACENT CONCRETE WALLS TO ALLOW FOR SHRINKAGE TO OCCUR. CAST POUR STRIPS 30 DAYS AFTER ALL SLAB CONCRETE HAS BEEN CAST EITHER SIDE OF POUR STRIP.
3. JOINTS TO BE LOCATED BY CONTRACTOR. REFER TO CONCRETE SPECIFICATION FOR CONCRETE POUR AND SUBMITTAL REQUIREMENTS.

2 POUR JOINT DETAILS TYPICAL POUR

NOT FOR CONSTRUCTION

09.AUG.21

ba
belzberg architects
2321 MAIN STREET
SANTA MONICA, CA 90405
310.453.9611
www.belzbergarchitects.com

ARUP
Arup North America Ltd.
900 Wilshire Boulevard,
19th Floor
Los Angeles CA 90017
Tel: 310 578 4400
www.arup.com

#	DESCRIPTION	DATE

TYPICAL CONCRETE DETAILS

PROJECT NUMBER:

S624

8/10/2021 5:30:12 PM

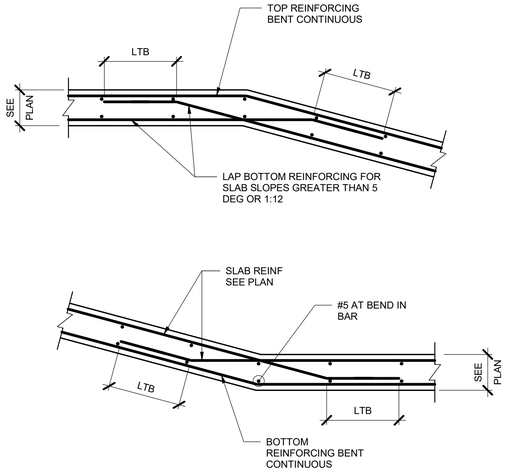

5 SLOPED SLAB DETAILS

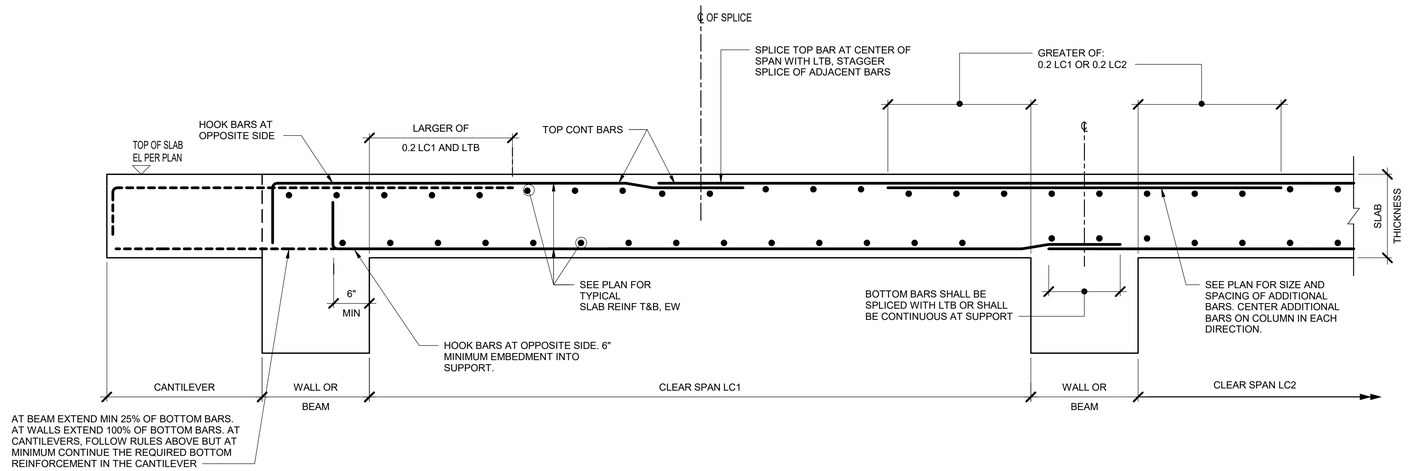

END SUPPORT

INTERIOR SUPPORT

NOTES:

1. THIS DETAIL APPLIES TO TWO-WAY SLABS ONLY.
2. LAP BOTTOM BARS AT SUPPORTS WHERE REQUIRED.
3. ADDITIONAL REINFORCING BARS SHALL ALTERNATE WITH MAIN REINFORCING BARS AND SHALL BE PLACED IN SAME LAYER WHERE REQUIRED ON PLAN.

3 TWO-WAY SLAB REINFORCEMENT

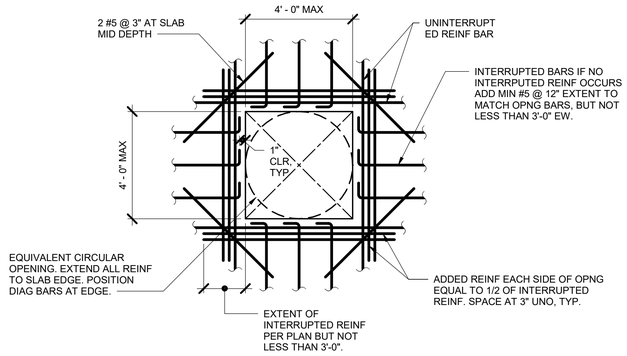

NOTES:
1. THIS DETAIL IS APPLICABLE TO TYPICAL FLAT SLAB AND SLAB ON GRADES.
2. THIS DETAIL IS NOT APPLICABLE TO PAN JIST OPENINGS.
3. MAXIMUM OPENING APPLICABLE FOR THIS DETAIL TO BE 4'-0"

4 TYPICAL > 8" TO MAX 4' - 0" SLAB AND SLOB ON GRADE OPENING DETAIL

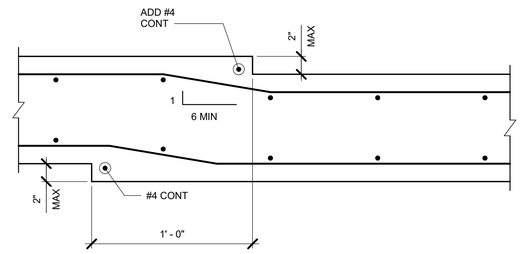

2 SLAB DEPRESSIONS/ STEPS - 2" MAX

NOT FOR CONSTRUCTION

09.AUG.21

belzberg architects
2321 MAIN STREET
SANTA MONICA, CA 90405
310.453.9611
www.belzbergarchitects.com

ARUP
Arup North America Ltd.
900 Wilshire Boulevard,
19th Floor
Los Angeles CA 90017
Tel: 310 578 4400
www.arup.com

#	DESCRIPTION	DATE

TYPICAL CONCRETE DETAILS

PROJECT NUMBER:

S625

8/10/2021 5:30:13 PM

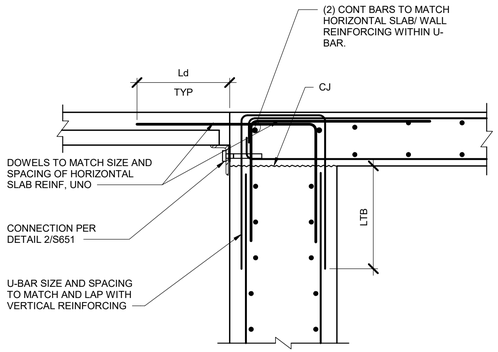

NOTES:

1. COMPOSITE DECK REINF NOT SHOWN FOR CLARITY.

5 METAL DECK TO RC WALL DETAIL

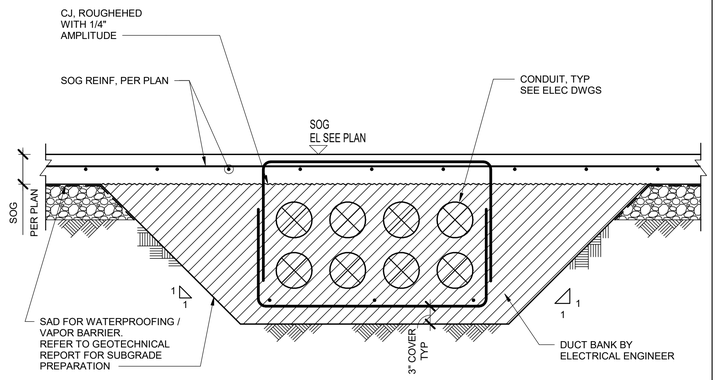

NOTES:

1. SLAB ON GRADE PER PLAN.
2. LOCATION, MIN COVER, CONCRETE STRENGTH, SPACING BETWEEN CONDUITS BY ELECTRICAL ENGINEER.
3. DETAIL FOR SLAB ON GRADE WITH DOUBLE LAYER REINFORCEMENT SHALL BE SIMILAR.

3 ELECTRICAL DUCT BANK CONNECTED TO SLAB ON GRADE

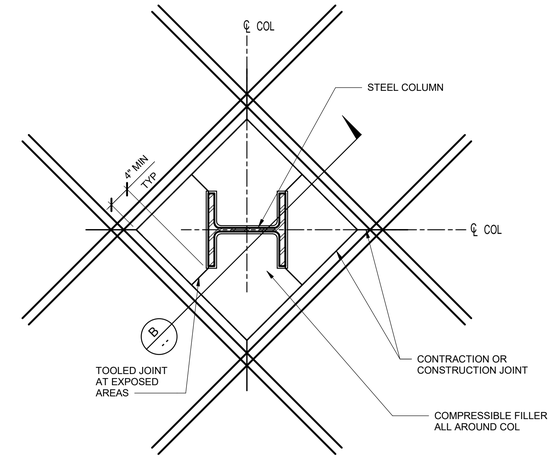

A -- PLAN

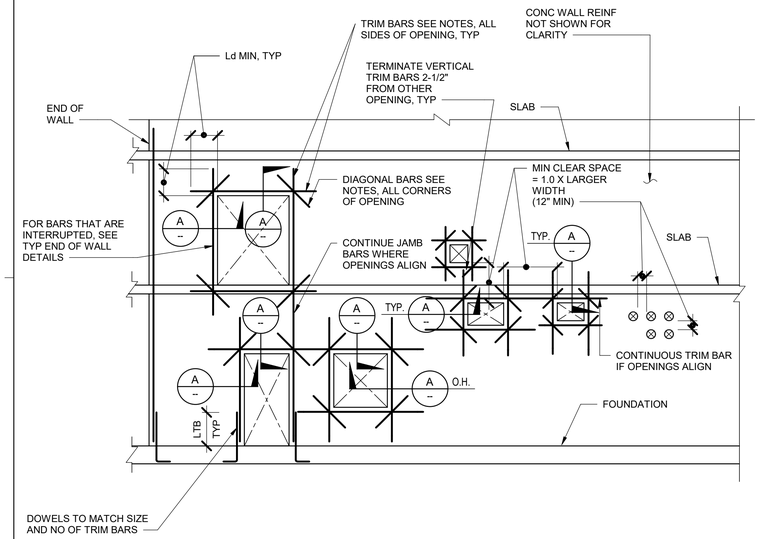

6 TYPICAL CONCRETE WALL TRIM REINFORCEMENT FOR OPENING

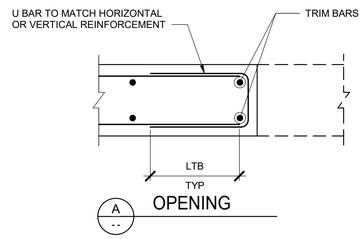

NOTES:

1. TRIM REINF SHOWN ON DETAIL IS MINIMUM. IF TRIM REINF IS SHOWN IN WALL ELEV PROVIDE REINF IN WALL ELEV IN LIEU OF THIS REINF.

2. CONTRACTOR SHALL COORDINATE OPENING SIZES AND LOCATIONS WITH MEP CONTRACTORS AND ARCHITECT. CONTRACTOR SHALL SHOW ALL OPENINGS AND TRIM REINF ON SHOP DRAWINGS.

3. APPLY DETAIL A OF AS SHOWN ABOVE AROUND OPENINGS UNLESS MORE STRINGENT BOUNDARY ZONE REINFORCEMENT OR LINK BEAM REINFORCEMENT REPLACE THE RESPECTIVE TRIM BARS.

4. TRIM REINFORCEMENT OUTSIDE OF THE DIMENSIONS BELOW ARE DETAILED IN ELEVATION. THE CONTRACTOR SHALL NOTIFY THE ENGINEER IF OPENINGS ARE NOT COVERED BY THE TRIM REINFORCEMENT RULES BELOW AND DO NOT HAVE REINFORCEMENT DETAILED IN ELEVATION.

5. TYPICAL TRIM REINFORCEMENT :

A. OPENING WIDTH EQUAL OR LESS THAN 5'-0", HEIGHT LESS THAN 7'-0".

TRIM BARS = (2) #9
DIAGONAL BARS (1) #5 X 4'-0"
FOR EACH LAYER OF WALL REINFORCING

B. OPENING WIDTH OR HEIGHT EQUAL TO OR LESS THAN 5'-0", BUT GREATER THAN 2'-0".

TRIM BARS = (2) #8
DIAGONAL BARS (1) #5 X 4'-0"
FOR EACH LAYER OF WALL REINFORCING

C. OPENING WIDTH OR HEIGHT EQUAL TO OR LESS THAN 2'-0" BUT GREATER THAN 8"

TRIM BARS = (2) #6
NO DIAGONAL BARS REQUIRED

D. OPENING WIDTH AND HEIGHT EQUAL TO OR LESS THAN 8"

NO DIAGONAL BARS REQUIRED
ROUTE TYPICAL WALL REINFORCEMENT AROUND OPENING SATISFYING MINIMUM CONCRETE COVER SO NO BARS ARE INTERRUPTED.
AT MINIMUM ONE REBAR NEEDS TO RUN BETWEEN OPENINGS.
AT CLUSTERED OPENINGS PROVIDE TRIM BARS AROUND THE CLUSTER USING THE RULES FOR THE COMBINED OPENING SIZE.

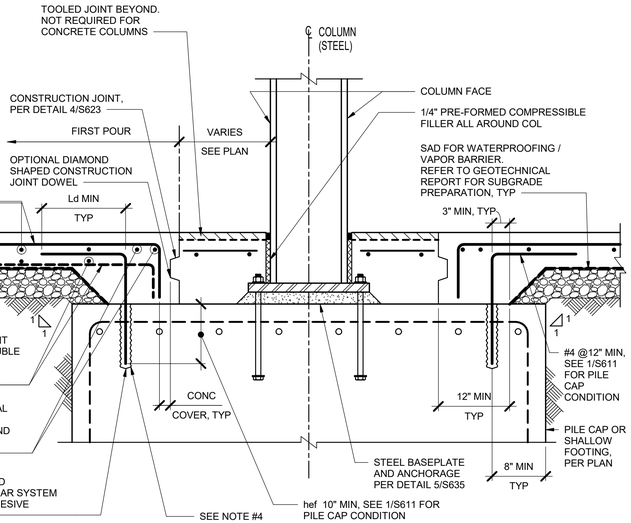

B -- SECTION

NOTES:

1. SLAB ON GRADE PER PLAN.
2. CONTRACTOR SHALL LOCATE EXISTING BARS WITH NON-DESTRUCTIVE TESTING AND SHALL NOT DAMAGE EXISTING BARS DURING INSTALLION OF NEW BARS.
3. BARS EPOXIED INTO CONCRETE SHALL MAINTAIN THE MINIMUM EDGE DISTANCES PER ICC REPORT AND SHALL BE WITHIN THE REINFORCING CAGE OF THE FOOTING OR PILE CAP, UNO.
4. POST INSTALLED REINFORCING BAR SYSTEM PER GENERAL NOTES.

2 CONSTRUCTION JOINTS AT STEEL COLUMNS SLAB ON GRADE

NOT FOR CONSTRUCTION

09.AUG.21

belzberg architects
2321 MAIN STREET
SANTA MONICA, CA 90405
310.453.9611
www.belzbergarchitects.com

ARUP
Arup North America Ltd.
900 Wilshire Boulevard,
19th Floor
Los Angeles CA 90017
Tel: 310 578 4400
www.arup.com

#	DESCRIPTION	DATE

TYPICAL CONCRETE DETAILS

PROJECT NUMBER:

S626

8/10/2021 5:30:15 PM

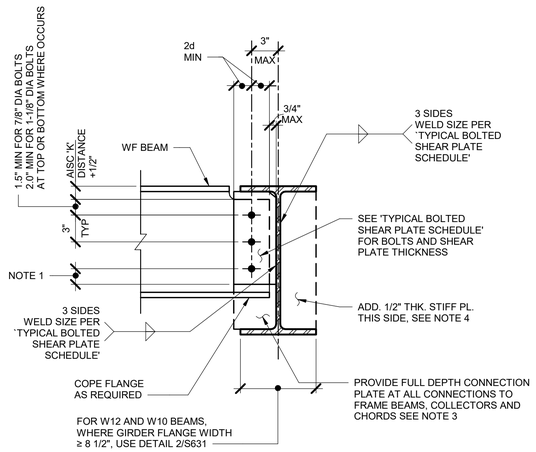

NOTES:
1. SEE 1/S630 FOR INFORMATION NOT SHOWN.
2. 'd' DENOTES DIAMETER OF BOLT.
3. FRAME BEAMS INCLUDE BRACED FRAME BEAMS. COLLECTORS AND CHORDS INCLUDE ANY WIDE FLANGE BEAM IDENTIFIED WITH CONNECTION SYMBOLS AT ENDS EXCLUDING THE FOLLOWING BEAMS:
   a. BEAMS AT CANTILEVERS AND THEIR BACKSPANS
   b. BEAMS WITH CONNECTION SYMBOL " ⊢ "
4. STIFF PL. REQUIRED WHERE FULL DEPTH CONN PLATE IS PROVIDED. EXCEPTION: WHERE BEAM OCCURS AT THE OPPOSITE SIDE OF THE GIRDER WITHIN 10" OFFSET DISTANCE OF THE BEAM CENTERLINE, ADDITIONAL STIFF PL. IS NOT REQUIRED.
5. ═══ WHERE AXIALLY RELEASED CONNECTION IS INDICATED ON PLAN, PROVIDE LONG SLOTTED HOLES IN SHEAR PLATE.

5 TYPICAL ONE-SIDED BEAM TO GIRDER CONNECTION

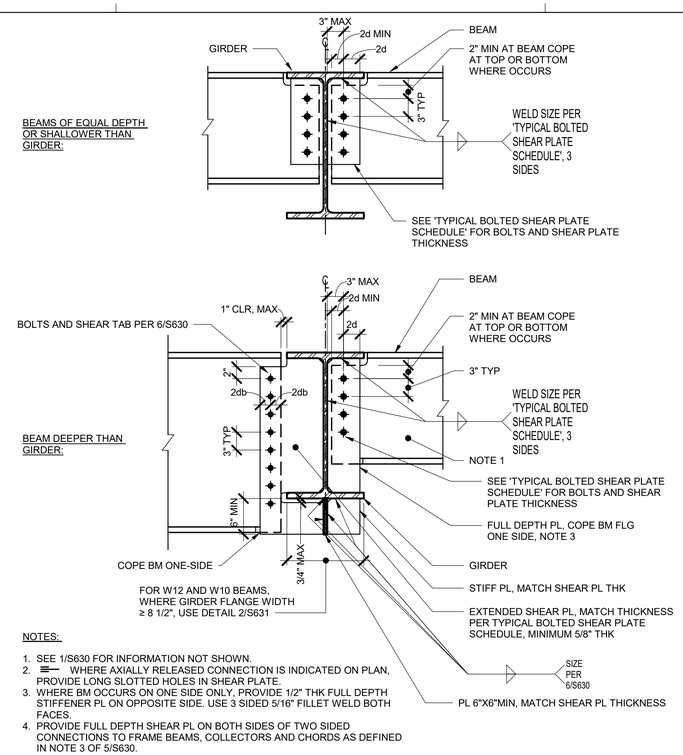

NOTES:
1. SEE 1/S630 FOR INFORMATION NOT SHOWN.
2. ═══ WHERE AXIALLY RELEASED CONNECTION IS INDICATED ON PLAN, PROVIDE LONG SLOTTED HOLES IN SHEAR PLATE.
3. WHERE BM OCCURS ON ONE SIDE ONLY, PROVIDE 1/2" THK FULL DEPTH STIFFENER PL ON OPPOSITE SIDE. USE 3 SIDED 5/16" FILLET WELD BOTH FACES.
4. PROVIDE FULL DEPTH SHEAR PL ON BOTH SIDES OF TWO SIDED CONNECTIONS TO FRAME BEAMS, COLLECTORS AND CHORDS AS DEFINED IN NOTE 3 OF 5/S630.

3 BEAM TO GIRDER CONNECTION

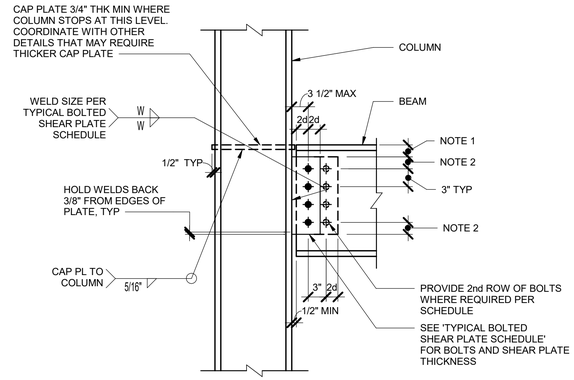

NOTES:
1. SHEAR PLATE SHALL CLEAR AISC 'k'.
2. MINIMUM EDGE DISTANCE:
   1 1/2" MINIMUM AT 7/8" DIAMETER BOLTS
   1 3/4" MINIMUM AT 1 1/8" DIAMETER BOLTS
   MINIMUM EDGE DISTANCE 2d UNLESS NOTED OTHERWISE
3. 'd' DENOTES DIAMETER OF BOLT.
4. PROVIDE AISC STANDARD HOLES IN BEAM.
5. PROVIDE AISC STANDARD HOLES IN SHEAR PLATE. AT SNUG-TIGHT AND PRE-TENSIONED CONNECTIONS, CONTRACTOR MAY USE HORIZONTALLY SHORT SLOTTED HOLES (SSL) IN SHEAR PLATE.
4. FOR BOLTS, WELDS AND PLATE THICKNESS SEE SCHEDULE 6/S630.

1 TYPICAL BEAM TO COLUMN FLANGE CONNECTION

CONNECTING BEAM SIZE	STANDARD SHEAR TAB CONNECTION				SLIP-CRITICAL CONNECTION TYPE			
	NUMBER OF BOLTS 'n'	BOLT DIAMETER AND BOLT TYPE, 'db'	SHEAR TAB PLATE THICKNESS 't'	SHEAR TAB FILLET WELD SIZE 'w'	NUMBER OF BOLTS 'n'	BOLT DIAMETER AND BOLT TYPE, 'db'	SHEAR TAB PLATE THICKNESS 't'	SHEAR TAB FILLET WELD SIZE 'w'
W10	2	7/8" DIA A325-N	3/8"	1/4"	NOT APPLICABLE			
W12	2	7/8" DIA A325-N	3/8"	1/4"	2	1-1/8" DIA A490-SC	1/2"	3/8"
W14	3	7/8" DIA A325-N	3/8"	1/4"	3	1-1/8" DIA A490-SC	1/2"	3/8"
W16	4	7/8" DIA A325-N	3/8"	1/4"	4	1-1/8" DIA A490-SC	1/2"	3/8"
W18	4	7/8" DIA A325-N	3/8"	1/4"	4	1-1/8" DIA A490-SC	1/2"	3/8"
W21	5	7/8" DIA A325-N	3/8"	1/4"	5	1-1/8" DIA A490-SC	1/2"	3/8"
W24	6	7/8" DIA A325-N	3/8"	1/4"	6	1-1/8" DIA A490-SC	1/2"	3/8"
W27	7	7/8" DIA A325-N	3/8"	1/4"	7	1-1/8" DIA A490-SC	1/2"	3/8"
W30	8	7/8" DIA A325-N	3/8"	1/4"	8	1-1/8" DIA A490-SC	5/8"	7/16"
W33	9	7/8" DIA A325-N	3/8"	1/4"	9	1-1/8" DIA A490-SC	5/8"	7/16"
W36	10	7/8" DIA A325-N	3/8"	1/4"	10	1-1/8" DIA A490-SC	5/8"	7/16"
W40	11	7/8" DIA A325-N	3/8"	1/4"	10	1-1/8" DIA A490-SC	5/8"	7/16"
W44	12	7/8" DIA A325-N	3/8"	1/4"	12	1-1/8" DIA A490-SC	5/8"	7/16"

NOTES:

1. DIMENSIONS IN INCHES UNO.
2. CONNECTION PLATES SHALL BE ASTM A572 GRADE 50.
3. STANDARD SHEAR CONNECTION TYPE APPLIES TO ALL CONNECTIONS UNLESS NOTED OTHERWISE. HIGHER-CAPACITY SHEAR TAB CONNECTION AS NOTED ON PLAN. SLIP-CRITICAL CONNECTIONS AS SHOWN IN THE TYPICAL AND SPECIAL DETAILS AS WELL AS DEFINED IN THE GENERAL NOTES.
4. REFER TO CONNECTION DETAILS ON S630 THROUGH S638.
5. SEE DETAIL 1/S631 FOR WIDE FLANGE AND CHANNEL MEMBERS UP TO 8" DEEP.
6. SEE DETAIL 2/S631 FOR W8, W10, OR W12 BEAMS FRAMING INTO GIRDER MEMBERS WITH FLANGE WIDTH EXCEEDING 8 1/2",
7. REFER TO TYPICAL AND SPECIAL DETAILS IF STANDARD SHEAR TAB CONNECTION BOLTS AND HIGHER CAPACITY SHEAR TAB CONNECTION BOLTS ARE REQUIRED TO BE FULLY PRETENSIONED.

6 SHEAR TAB CONNECTION SCHEDULE

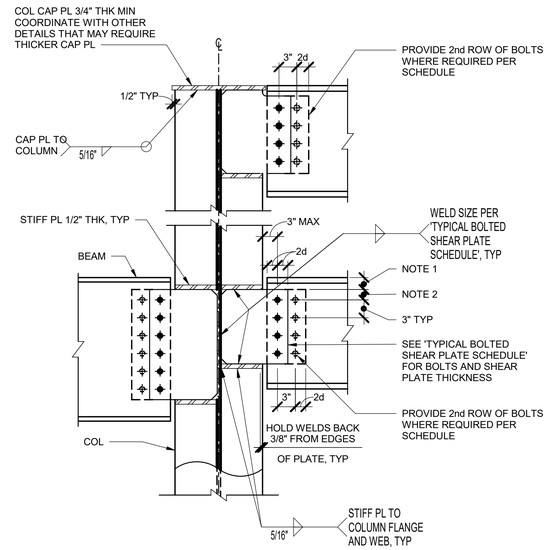

NOTES:
1. SEE 1/S630 FOR INFORMATION NOT SHOWN.

2 BEAM TO COLUMN WEB CONNECTION

NOT FOR CONSTRUCTION

09.AUG.21

belzberg architects
2321 MAIN STREET
SANTA MONICA, CA 90405
310.453.9611
www.belzbergarchitects.com

ARUP
Arup North America Ltd.
900 Wilshire Boulevard,
19th Floor
Los Angeles CA 90017
Tel: 310 578 4400
www.arup.com

#	DESCRIPTION	DATE

TYPICAL STEEL DETAILS

PROJECT NUMBER:

S630

8/10/2021 5:30:19 PM

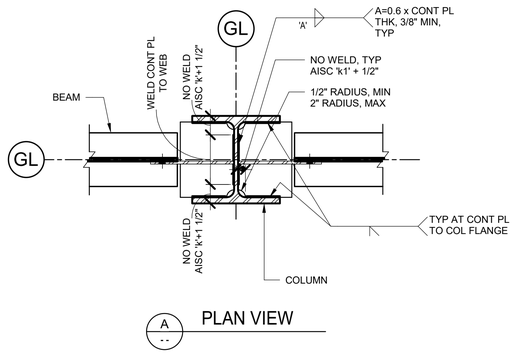

A -- PLAN VIEW

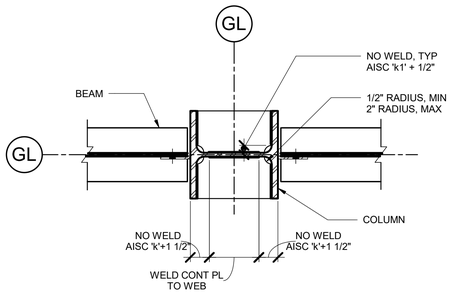

A -- PLAN VIEW

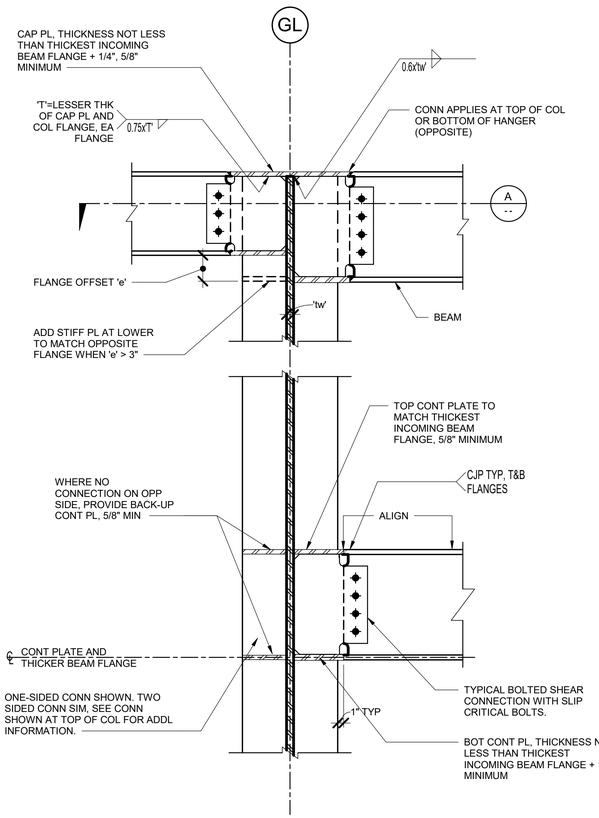

NOTES:

1. THIS DETAIL APPLIES FOR CONNECTIONS SHOWN ON PLAN AS: ▶—
2. WELD ACCESS HOLE SHALL SATISFY THE REQUIREMENTS SPECIFIED IN ANSI/AISC 360-16.
3. INCREASE PLATE THICKNESS AND WELDS AS REQUIRED BY OTHER CONNECTIONS FRAMING INTO JOINTS.
4. SHEAR TAB CONNECTION SHALL BE SLIP CRITICAL. REFER TO SCHEDULE 6/S630 AND DETAIL 1/S630.

6 NON-FRAME MOMENT CONNECTION BEAM TO COLUMN WEB

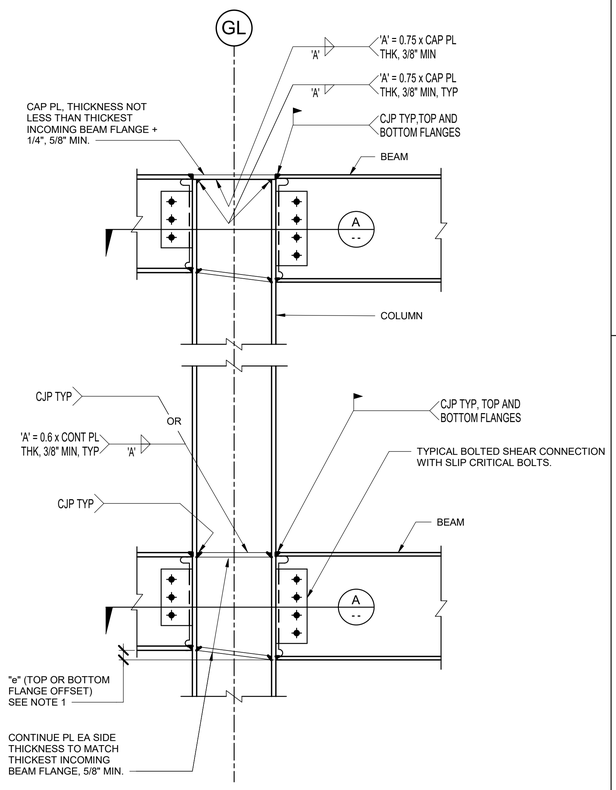

NOTES:

1. THIS DETAIL APPLIES FOR CONNECTIONS SHOWN ON PLAN AS: ▶—
3. WHERE BEAM FLANGES ARE OFFSET, SLOPE CONTINUOUS PLATES BETWEEN THE OFFSET FLANGES, UP TO A MAXIMUM OFFSET OF 3". FOR GREATER OFFSET, PROVIDE HORIZONTAL CONTINUE PLATES AT EACH FLANGE.
4. WELD ACCESS HOLE SHALL SATISFY THE REQUIREMENTS SPECIFIED IN ANSI/AISC 360-16.
5. INCREASE PLATE THICKNESS AND WELDS AS REQUIRED BY OTHER CONNECTIONS FRAMING INTO JOINTS.
6. SHEAR TAB CONNECTION SHALL BE SLIP CRITICAL. REFER TO SCHEDULE 6/S630 AND DETAIL 1/S630.

4 NON-FRAME MOMENT CONNECTION BEAM TO COLUMN FLANGE

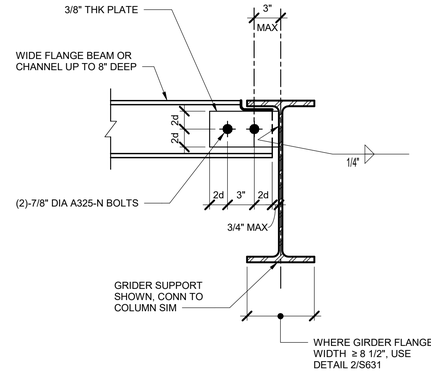

NOTES:

1. SEE THE TYPICAL BEAM CONNECTION DETAILS FOR CONNECTIONS TO DEEPER BEAMS.
2. SEE 1/S630 FOR INFORMATION NOT SHOWN.

1 SHALLOW BEAM CONNECTION

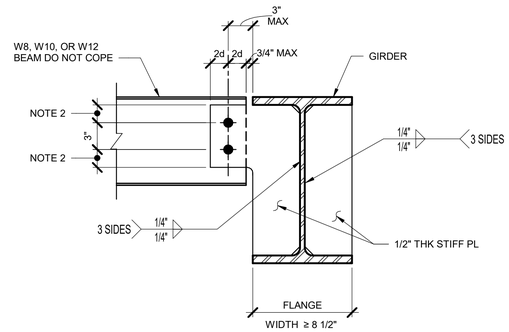

NOTES:

1. VERTICAL BOLT ARRANGEMENT SHOWN FOR W10 AND W12 BEAM. DETAIL FOR W8 BEAMS IS SIMILAR EXCEPT WITH HORIZONTAL BOLT ARRANGEMENT
2. SEE 1/S630 FOR INFORMATION NOT SHOWN.

2 W8, W10, W12 BEAM CONNECTION TO GIRDER WITH FLANGE WIDTH ≥ 8 1/2"

NOT FOR CONSTRUCTION

09.AUG.21

belzberg architects
2321 MAIN STREET
SANTA MONICA, CA 90405
310.453.9611
www.belzbergarchitects.com

ARUP
Arup North America Ltd.
900 Wilshire Boulevard,
19th Floor
Los Angeles CA 90017
Tel: 310 578 4400
www.arup.com

#	DESCRIPTION	DATE

TYPICAL STEEL DETAILS

PROJECT NUMBER:

S631

8/10/2021 5:32:22 PM

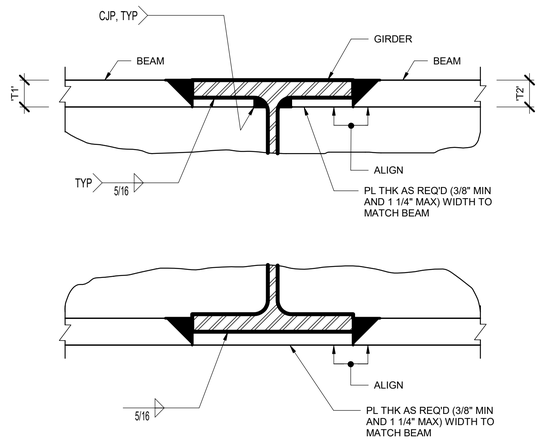

NOTES:

1. USE DETAIL IF BEAM FLANGE IS THICKER THAN GIRDER FLANGE OR IF BEAM IS DEEPER THAN GIRDER SO THAT BOTTOM FLANGES DO NOT ALIGN.

5 FLANGE ALIGNMENT PLATE

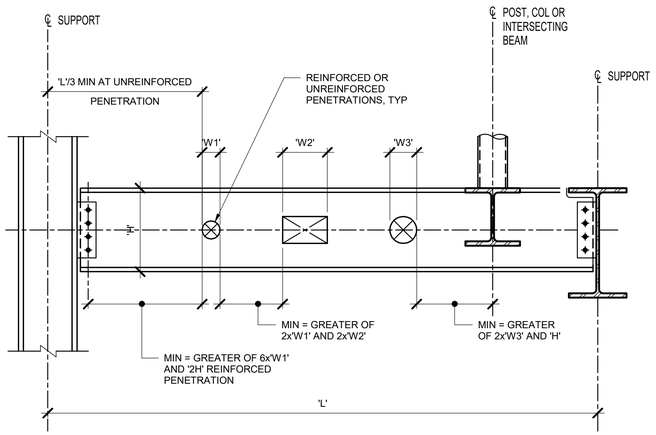

6 STEEL BEAM PENETRATION LAYOUT DETAIL

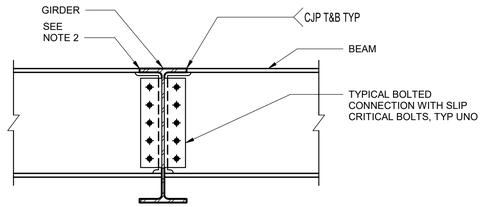

GIRDER DEEPER THAN BEAM

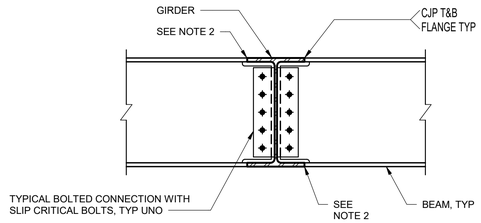

GIRDER & BEAM SAME DEPTH

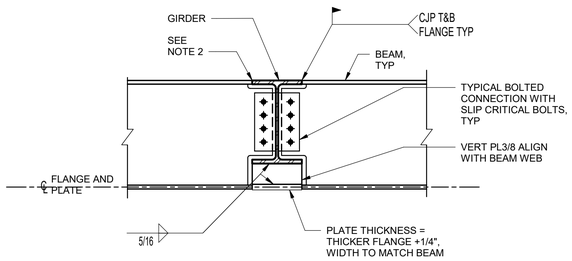

BEAM DEEPER THAN GIRDER

NOTES:

1. ▶—— THIS DETAIL APPLIES FOR CONNECTIONS SHOWN ON PLANS AS:
2. SEE THE 'FLANGE ALIGNMENT PLATE DETAIL' IF BEAM FLANGE IS THICKER THAN GIRDER FLANGE OR IF BEAM IS DEEPER THAN GIRDER SO THAT BOTTOM FLANGES DO NOT ALIGN.

4 MOMENT CONNECTION BEAM TO GIRDER

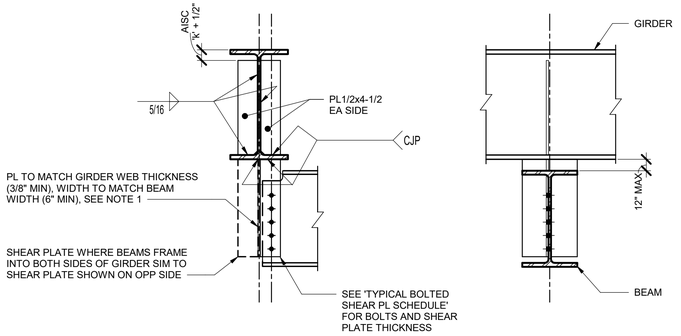

ELEVATION SECTION

NOTES:

1. BEAMS MAY OCCUR ON ONE SIDE OR BOTH SIDES OF GIRDER. WHERE BEAMS OCCUR ON BOTH SIDES, SIZE PLATE BY SIZE OF LARGER BEAM.

1 BEAM BELOW GIRDER CONNECTION

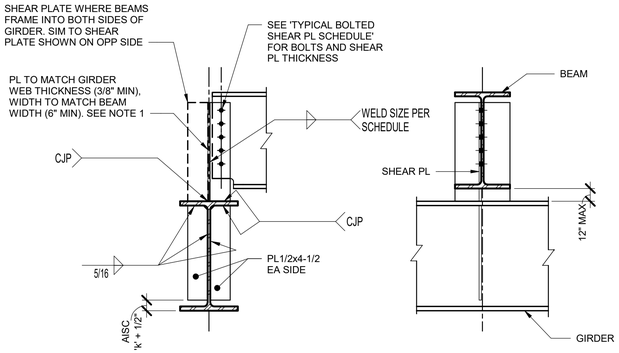

ELEVATION SECTION

NOTES:

1. BEAMS MAY OCCUR ON ONE SIDE OR BOTH SIDES OF GIRDER. WHERE BEAMS OCCUR BOTH SIDES, SIZE PLATE BY SIZE OF LARGER BEAM.

2 BEAM ABOVE GIRDER CONNECTION

NOT FOR CONSTRUCTION

09.AUG.21

ba
belzberg architects
2321 MAIN STREET
SANTA MONICA, CA 90405
310.453.9611
www.belzbergarchitects.com

ARUP
Arup North America Ltd.
900 Wilshire Boulevard,
19th Floor
Los Angeles CA 90017
Tel: 310 578 4400
www.arup.com

#	DESCRIPTION	DATE

TYPICAL STEEL DETAILS

PROJECT NUMBER:

S632

8/10/2021 5:30:25 PM

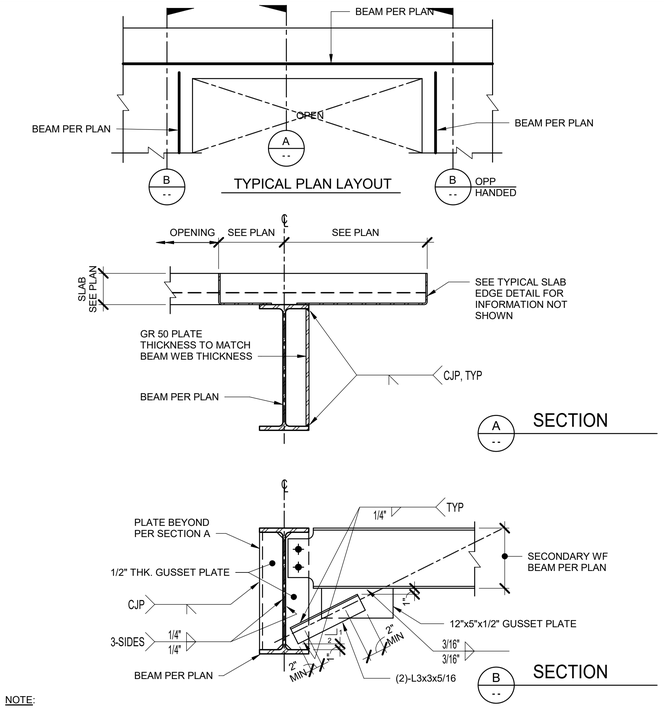

NOTE:

DECK NOT SHOWN FOR CLARITY.

5 TYPICAL WF BEAM BETWEEN SLAB EDGE AND OPENING

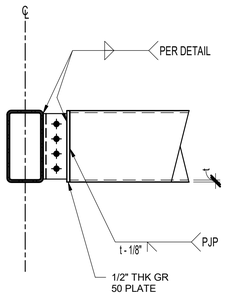

NOTES:

1. SEE STANDARD SHEAR TAB CONNECTION 6/ S630.
2. HSS DEPTH CORRESPONDS TO BEAM SIZE IN CONNECTION TABLE.

6 HSS TO HSS CONNECTION

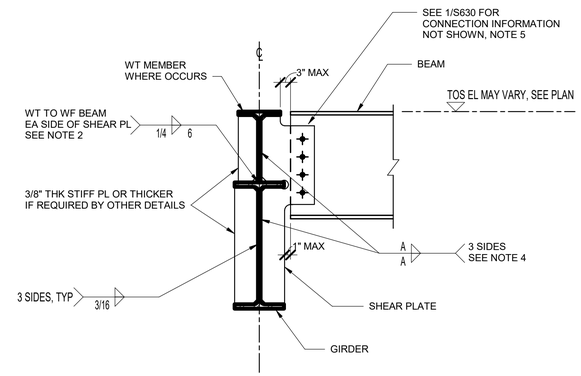

NOTES:

1. METAL DECK AND SLAB NOT SHOWN FOR CLARITY.
2. REFER TO DETAIL X/SXXX FOR WELDING OF WT TO WF BEAM WHERE SHEAR PL DOES NOT OCCUR.
3. WHERE WT OCCURS BELOW WF BEAM, CONNECTION IS SIMILAR.
4. SEE 6/S630 FOR SHEAR PLATE, BOLT AND WELD INFORMATION.
5. SEE 4/S637 FOR PLATE, WELD, AND BOLT INFORMATION WHERE THIS CONNECTION IS NOTED ON PLAN AS:

DOUBLE BOLT ROW

TRIPLE BOLT ROW

3 TYPICAL BEAM CONNECTION TO GIRDER WITH WT

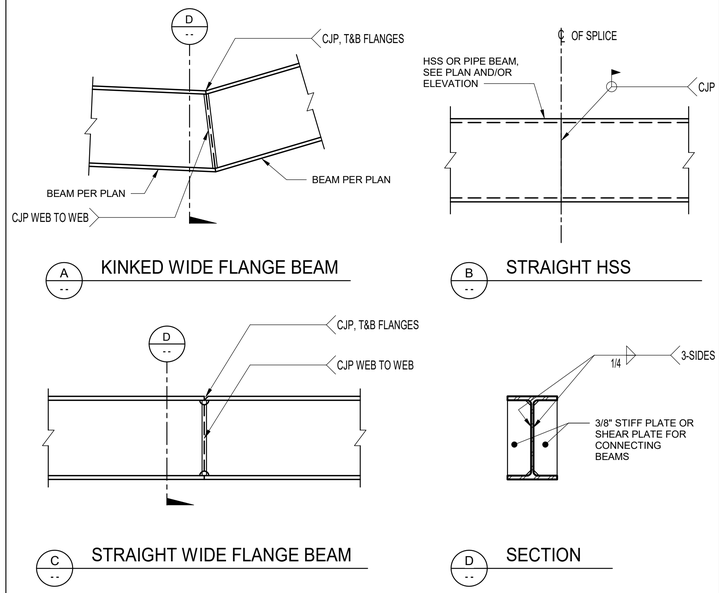

4 TYPICAL BEAM SPLICE

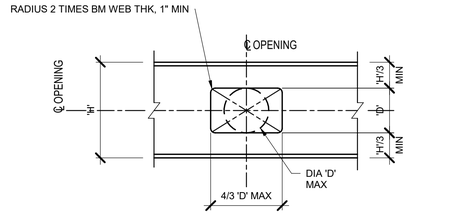

TYPE A - UNREINFORCED WEB

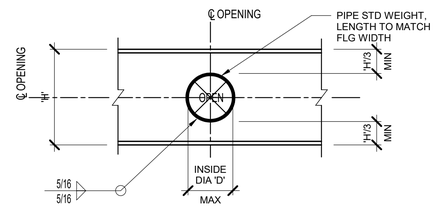

TYPE B - WEB REINFORCED (CIRCULAR ONLY)

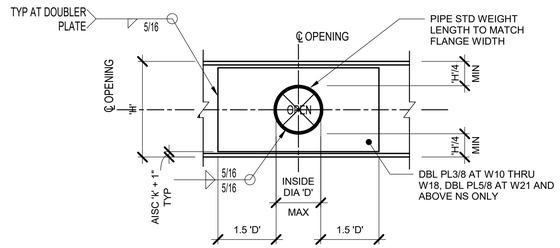

TYPE C - WEB REINFORCED WITH DOUBLER PLATE AND PIPE (CIRCULAR ONLY)

TABLE OF UNSCHEDULED PENETRATIONS		
'D' MAX		
TYPE A	TYPE B	TYPE C
'H'/5	'H'/3	'H'/2

NOTES:

1. NO PENETRATIONS SHALL BE PLACED IN BEAMS IN BRACED OR MOMENT FRAMES, OR TRUSS MEMBERS PER THIS DETAIL.
2. CONTRACTOR SHALL COORDINATE PENETRATION SIZES WITH FIREPROOFING REQUIREMENTS.
3. REFER TO DETAIL 6/S632 FOR TYPICAL STEEL BEAM PENETRATION LAYOUT.
4. NOT APPLICABLE FOR PLATE GIRDER WEB PENETRATIONS.
5. CONTRACTOR SHALL SUBMIT ALL PENETRATION LOCATIONS AND SIZES FOR REVIEW AND APPROVAL BY SEOR AND OSHPD.
6. WHERE PENETRATION DIMENSIONS SPECIFICALLY REFERENCED ON 1/S633 CONFLICT WITH TYPICAL DETAILS, THE DIMENSIONS IN 1/S633 SHALL GOVERN.

1 TYPICAL UNSCHEDULED BEAM WEB PENETRATION

NOT FOR CONSTRUCTION

09.AUG.21

belzberg architects
2321 MAIN STREET
SANTA MONICA, CA 90405
310.453.9611
www.belzbergarchitects.com

ARUP
Arup North America Ltd.
900 Wilshire Boulevard,
19th Floor
Los Angeles CA 90017
Tel: 310 578 4400
www.arup.com

#	DESCRIPTION	DATE

TYPICAL STEEL DETAILS

PROJECT NUMBER:

S633

8/10/2021 5:30:28 PM

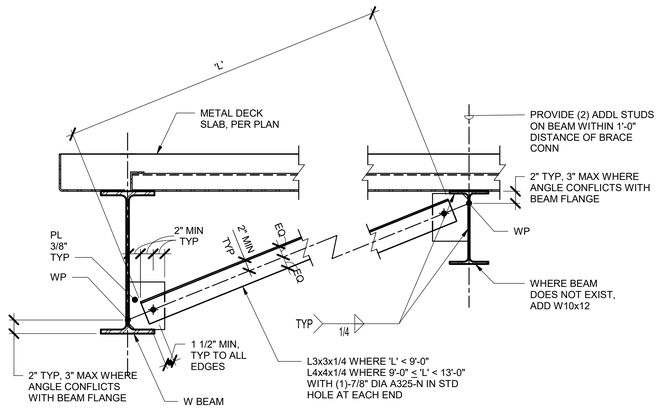

NOTE:
1. APPLY AS SHOWN IN PLAN.

5 BOTTOM FLANGE BRACE TO PARALLEL WIDE FLANGE BEAM

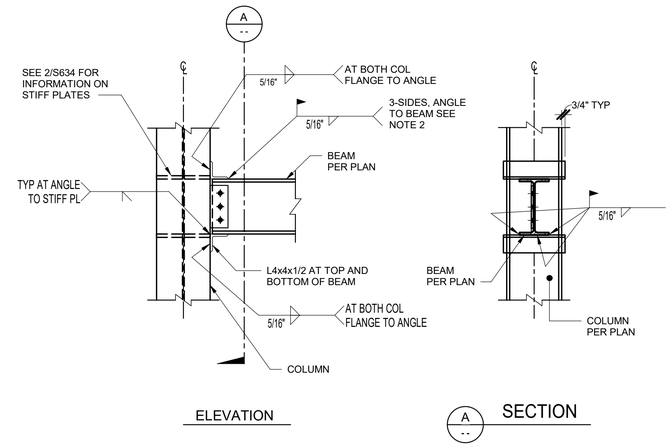

NOTES:

1. SEE 'TYPICAL BEAM TO COLUMN WEB CONNECTION' FOR INFORMATION NOT SHOWN.
2. WHERE ANGLE IS WIDER THAN BEAM FLANGE, HOLD BACK WELDS 1/2" EACH END TO AVOID GOUGING.

3 TORSION CONNECTION WF BEAM TO COLUMN WEB

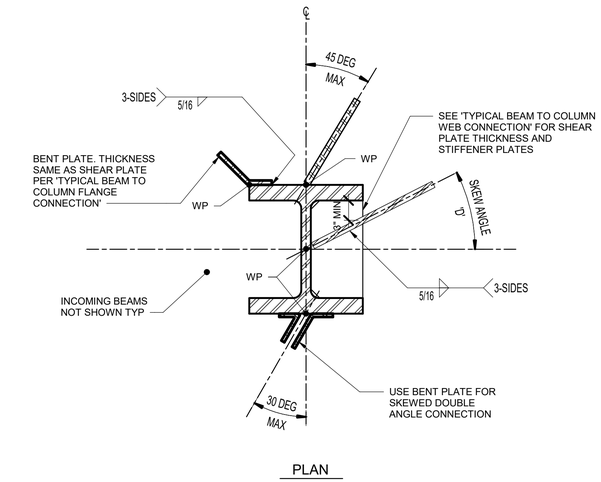

NOTES:

1. SEE PLAN FOR SKEW ANGLES.

1 TYPICAL SKEWED BEAM TO COLUMN CONNECTION

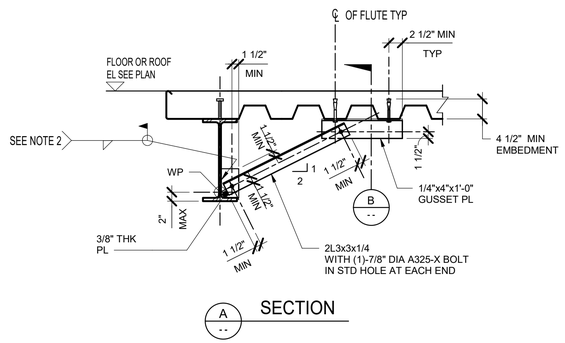

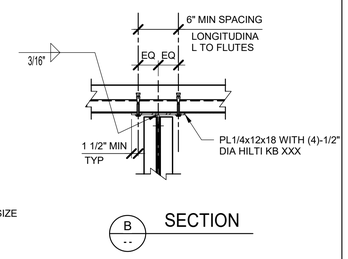

NOTES:

1. DECK PARALLEL TO BEAM CONNECTION IS SHOWN HERE. WHERE DECK IS PERPENDICULAR, THE CONNECTION SHALL BE SIMILAR.
2. THE LARGER OF 1/4" FILLET WELD OR AWS MIN REQUIRED WELD SIZE SHALL BE USED.
3. CONTRACTOR SHALL ADJUST 1/4" PLATE AND GUSSET PLATE SIZE/LOCATION TO FIT SPECIFIC DECK CONDITIONS.
4. APPLY AS SHOWN IN PLAN.

6 BOTTOM FLANGE BRACE DETAIL TO DECK

SKEW ANGLE 'D' (DEGREE)	'b'		
	'T' < 3/8"	3/8" < 'T' < 1/2"	1/2" < 'T' < 5/8"
0 TO 10	0	0	0
10 TO 17	1/8"	3/16"	3/16"
17 TO 22	3/16"	1/4"	NOT APPLICABLE
22 TO 30	1/4"	NOT APPLICABLE	NOT APPLICABLE

'T' = SHEAR PLATE THICKNESS

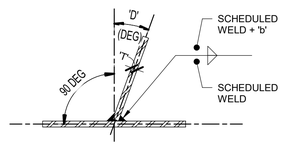

SQUARE PLATE EDGE ('D' = 0 TO 30)

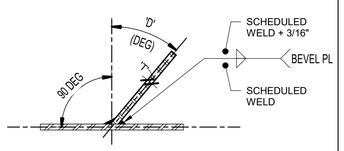

BEVELED PLATE EDGE ('D' = 17 TO 45)

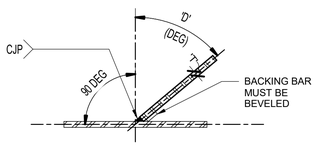

FULL PENETRATION ('D' > 45)

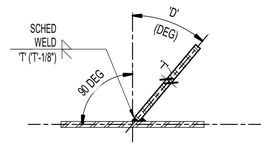

ALTERNATE SQUARE PLATE EDGE ('D' = 22 TO 45)

NOTES:

1. SEE TYPICAL BOLTED SHEAR TAB SCHEDULE ON 6/S630 FOR SCHEDULED WELD AND SHEAR PLATE THICKNESS.

4 TYPICAL SKEWED SHEAR PLATE

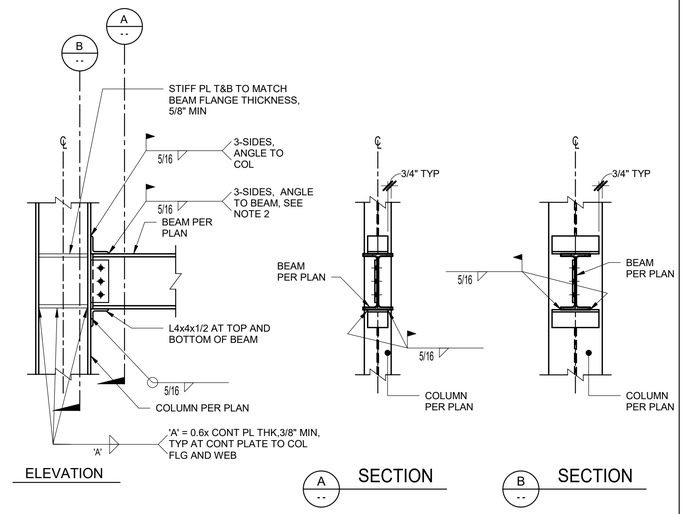

NOTES:

1. SEE 'TYPICAL BEAM TO COLUMN FLANGE CONNECTION' FOR INFORMATION NOT SHOWN.
2. WHERE ANGLE IS WIDER THAN BEAM FLANGE, HOLD BACK WELDS 1/2" EACH END TO AVOID GOUGING.

2 TORSION CONNECTION WF BEAM TO COLUMN FLANGE

NOT FOR CONSTRUCTION

09.AUG.21

belzberg architects
2321 MAIN STREET
SANTA MONICA, CA 90405
310.453.9611
www.belzbergarchitects.com

ARUP
Arup North America Ltd.
900 Wilshire Boulevard,
19th Floor
Los Angeles CA 90017
Tel: 310 578 4400
www.arup.com

#	DESCRIPTION	DATE

TYPICAL STEEL DETAILS

PROJECT NUMBER:

S634

8/10/2021 5:30:32 PM

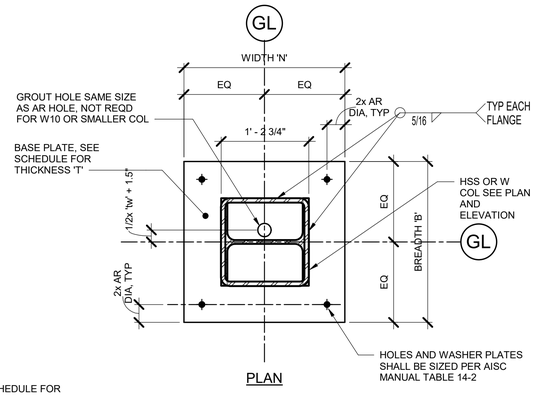

PLAN

NOTES:

1. REFER TO BASE PLATE SCHEDULE FOR BASE PLATE DIMENSIONS.

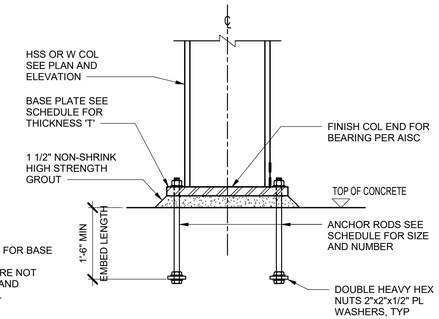

NOTES:

1. REFER TO BASE PLATE SCHEDULE FOR BASE PLATE DIMENSIONS.
2. BASEMENT SLAB AND PILE CAPS ARE NOT SHOWN. REFER TO PLAN SHEETS AND TYPICAL DETAILS FOR ADDITIONAL INFORMATION.

5 TYPICAL BASE PLATE DETAIL TYPE 1

STEEL COLUMN BASE PLATE SCHEDULE								
BASE PLATE TAG	DETAIL TYPE	PLATE			ANCHORS			NOTES
		WIDTH 'N'	BREADTH 'B'	THICKNESS 'T'	DIAMETER	NUMBER OF RODS	EMBEDMENT DEPTH	
		(IN)	(IN)	(IN)	(IN)		(IN)	
BP-1	5/S635	20	20	1.25	1	4	18	
BP-1X	X/SXXX	20	20	1.25	1	4	18	
BP-2	X/SXXX	20	20	1.75	1	4	18	
BP-3	X/SXXX	20	20	2.25	1	4	18	
BP-4	X/SXXX	24	24	3	1	4	18	
BP-5	X/SXXX	32	32	5.25	1	4	18	
BP-6	X/SXXX	14	14	1.25	0.5	4	18	
BP-7	X/SXXX	15	15	1	1	4	18	

NOTE:

1. BASE PLATE TAGS PER PLAN.

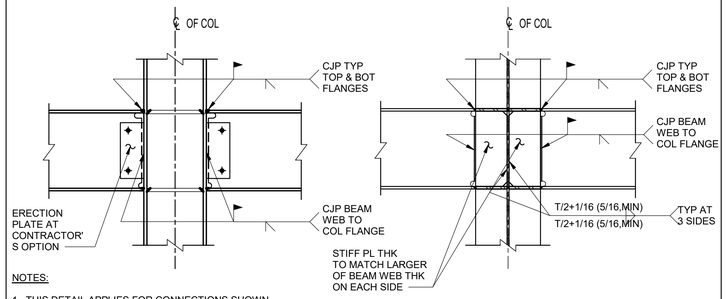

NOTES:

1. THIS DETAIL APPLIES FOR CONNECTIONS SHOWN ON PLAN AS:
2. FOR INFORMATION NOT SHOWN, SEE 4 / S631

A -- DETAIL

NOTES:

1. THIS DETAIL APPLIES FOR CONNECTIONS SHOWN ON PLAN AS:
2. FOR INFORMATION NOT SHOWN, SEE 6 / S631

B -- DETAIL

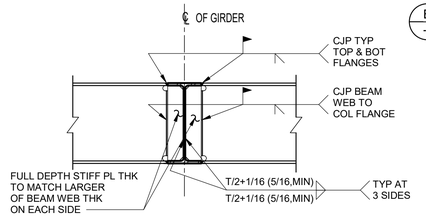

C -- DETAIL

NOTES:

1. THIS DETAIL APPLIES FOR CONNECTIONS SHOWN ON PLAN AS:
2. SEE 5 / S632 IF BEAM FLANGE IS THICKER THAN GIRDER FLANGE.

1 TYPICAL MOMENT CONNECTION WITH WELDED WEB AT COLLECTORS

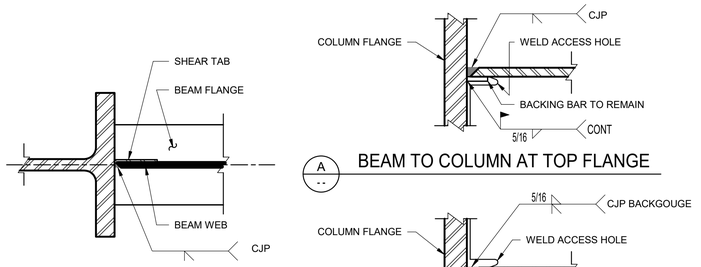

D -- BEAM WEB TO COLUMN FLANGE

A -- BEAM TO COLUMN AT TOP FLANGE

B -- BEAM TO COLUMN AT BOTTOM FLANGE

NOTES:

1. DEMAND CRITICAL WELDS (DCW) ARE DEFINED IN THE REFERRING DETAILS.

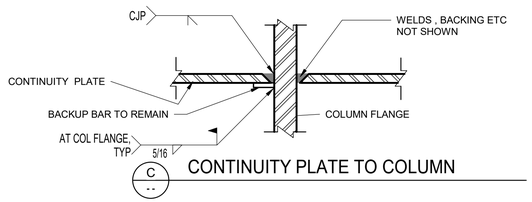

C -- CONTINUITY PLATE TO COLUMN

6 SFRS WELD BACKING DETAILS AT BEAM TO COLUMN JOINTS

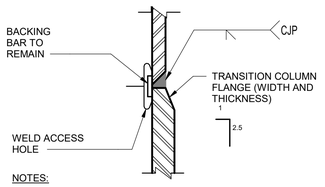

NOTES:

REFER TO AWS D1.8/D1.8M CLAUSE 4.2 FOR ALL TAPERED TRANSITION CONDITIONS AND REQUIREMENTS.

A -- COLUMN SPLICE

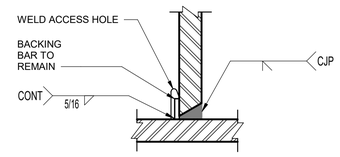

B -- COLUMN TO BASE PLATE

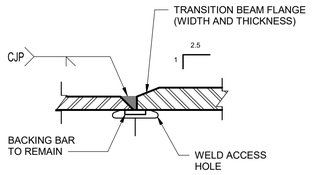

C -- BEAM FLANGE

NOTES:

1. DEMAND CRITICAL WELDS (DCW) ARE DEFINED IN THE REFERRING DETAILS.

4 SFRS WELD BACKING DETAILS AT COLUMN SPLICES AND COLUMN BASE

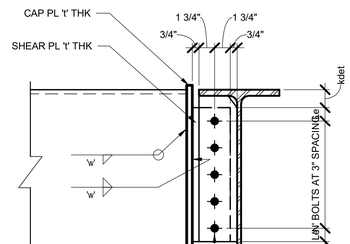

NOTES:

1. USE PLATE THICKNESSES, BOLTS, AND WELDS PER TYPICAL SHEAR TAB SCHEDULE 6/S630.
2. EDGE DISTANCE 'Le' EQUALS 1-1/2" FOR 7/8" DIAMETER BOLTS AND 2" FOR 1-1/8" DIAMETER BOLTS.
3. USE NUMBER OF BOLTS 'N' EQUAL TO THE CLOSEST WF SECTION DEPTH TO THE HSS DEPTH + 2".
4. REFER TO TYPICAL SHEAR TAB DETAILS ON S630 FOR DIFFERENT CONNECTION CONFIGURATIONS.

2 TYPICAL HSS SHEAR TAB DETAIL

NOT FOR CONSTRUCTION

09.AUG.21

ba
belzberg architects
2321 MAIN STREET
SANTA MONICA, CA 90405
310.453.9611
www.belzbergarchitects.com

ARUP
Arup North America Ltd.
900 Wilshire Boulevard,
19th Floor
Los Angeles CA 90017
Tel: 310 578 4400
www.arup.com

#	DESCRIPTION	DATE

TYPICAL STEEL DETAILS

PROJECT NUMBER:

S635

8/10/2021 5:30:36 PM

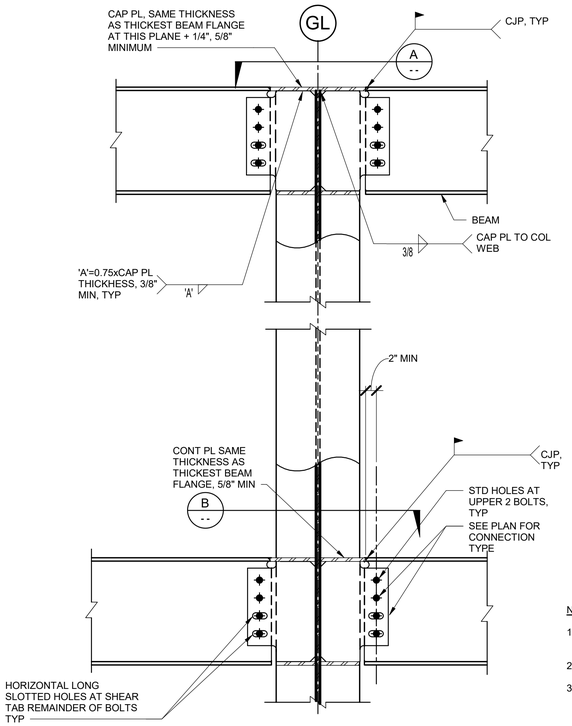

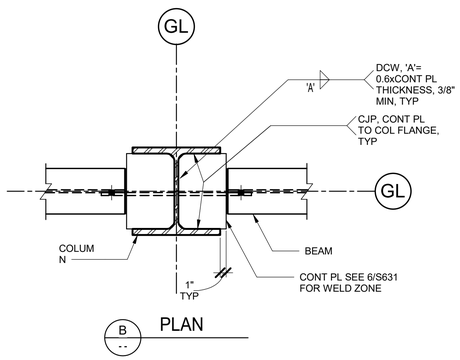

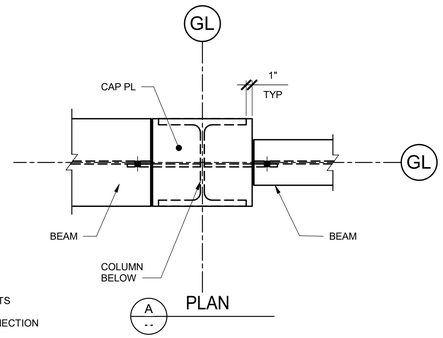

NOTES:

1. FOR CONNECTION SHOWN ON PLAN AS:
2. WELD ACCESS HOLE SHALL SATISFY THE REQUIREMENTS SPECIFIED IN ANSI/AISC 360-16.
3. BOLTS SHALL BE PER THE STANDARD TPE SHEAR CONNECTION IN SCHEDULE 6/S630 BUT FULLY PRETENSIONED.

5 WELDED TOP FLANGE DRAG STRUT CONNECTION TO COLUMN WEB

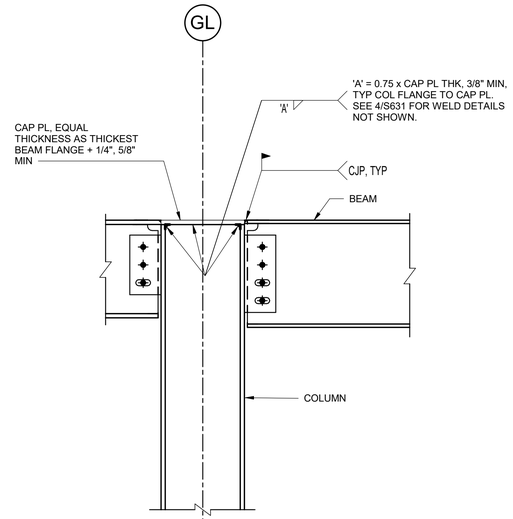

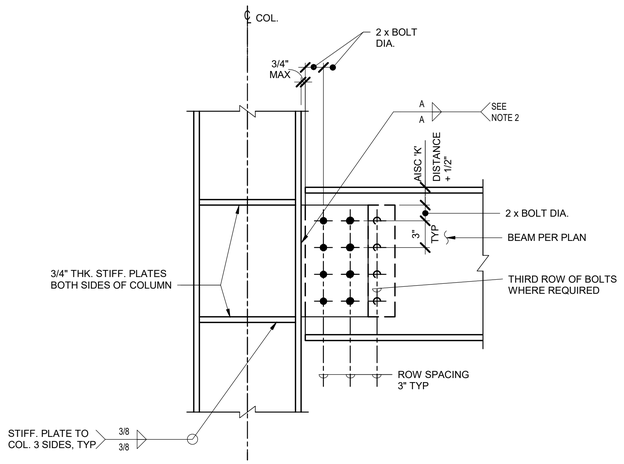

NOTES:

1. THIS DETAIL APPLIES FOR CONNECTIONS SHOWN ON PLAN AS:
2. SEE DRAG STRUT CONNECTION SCHEDULE 4/S637 FOR WELD SIZE, PLATE THICKNESS, BOLT ROW SPAING AND NUMBER OF BOLTS.

6 BOLTED DRAG STRUT CONNECTION - BEAM TO COLUMN FLANGE

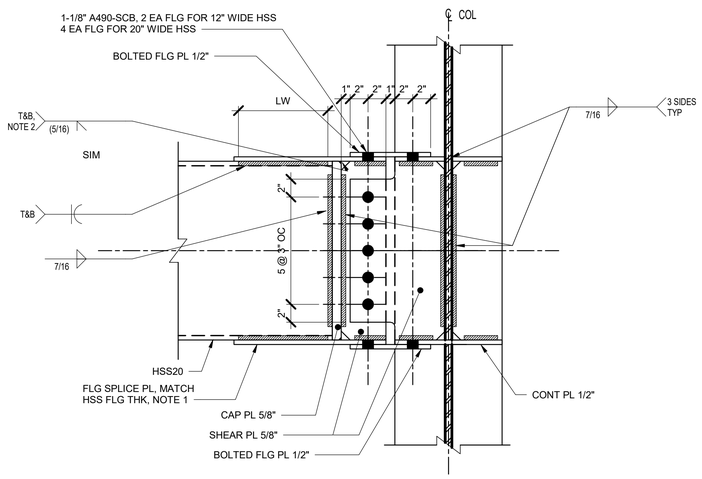

NOTES:

1. IF HSS IS A BUILT UP SHAPE, MAY CONTINUE FLANGE PLATES IN LIEU OF ADDING WELDED COVER PLATES.
2. IT IS PERMISSIBLE TO DETAIL THE END PLATE DEPTH TO ACCOMODATE ANTICIPATED HSS MILL TOLERANCES. WHERE THE PJP GROOVE WELD ROOT OPENING EXCEEDS THAT PERMISSIBLE BY AWS D1.1 SECTION 5.21.2 DUE TO HSS MILL TOLERANCES AND THE AS-DETAILED END PLATE DEPTH, IT IS PERMISSIBLE TO CORRECT THE ROOT OPENING PER AWS D1.1 SECTION 5.21.4.2 PRIOR TO JOINING THE PARTS.
3. FILLER PLATES ARE PERMITTED BETWEEN PLIES. FILLER PLATES SHALL HAVE CLASS B SURFACE PREPARATION ON BOTH SIDES. THERE IS NO LIMIT ON THE QUANTITY OR THICKNESS OF FILLER PLATES PER AISC 360 SECTION J5.2(D).

4 TYP HSS BEAM CONNECTION

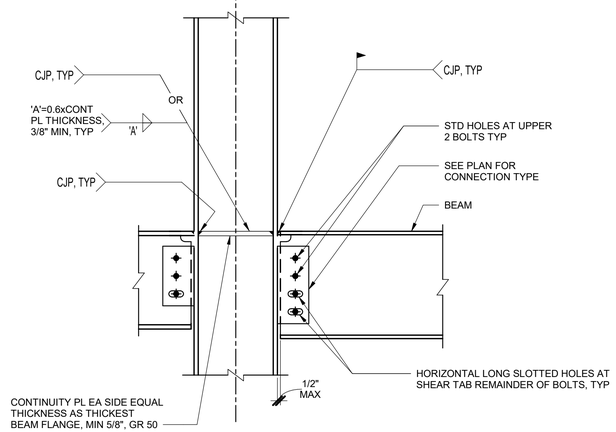

NOTES:

1. FOR CONNECTION SHOWN ON PLAN AS:
2. WELD ACCESS HOLE SHALL SATISFY THE REQUIREMENTS SPECIFIED IN ANSI/AISC 360-16.
3. BOLTS SHALL BE PER THE STANDARD TPE SHEAR CONNECTION IN SCHEDULE 6/ S630 BUT FULLY PRETENSIONED.

2 WELDED TOP FLANGE DRAG STRUT CONNECTION TO COLUMN FLANGE

NOT FOR CONSTRUCTION

09.AUG.21

belzberg architects
2321 MAIN STREET
SANTA MONICA, CA 90405
310.453.9611
www.belzbergarchitects.com

ARUP
Arup North America Ltd.
900 Wilshire Boulevard,
19th Floor
Los Angeles CA 90017
Tel: 310 578 4400
www.arup.com

#	DESCRIPTION	DATE

TYPICAL STEEL DETAILS

PROJECT NUMBER:

S636

8/10/2021 5:30:39 PM

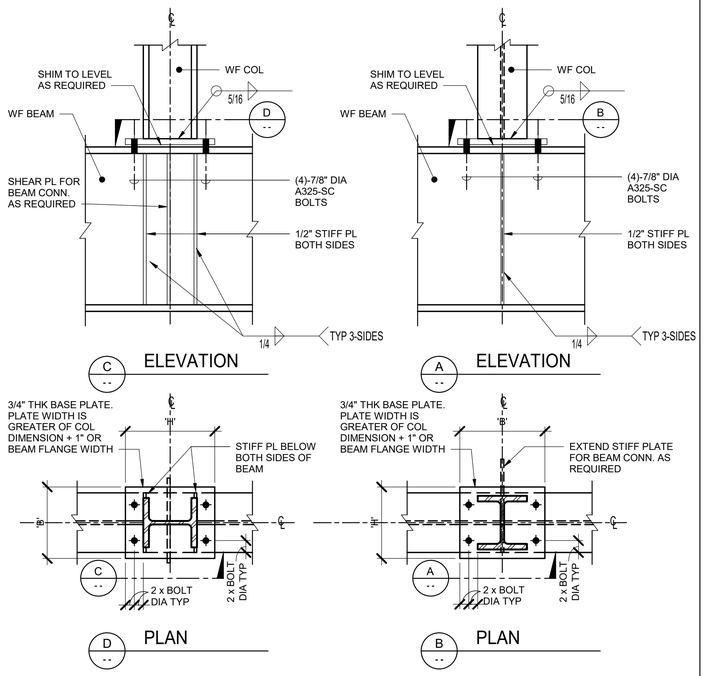

NOTES:

1. USE THIS SAME DETAIL WHERE WIDE FLANGE COLUMN FRAMES INTO THE UNDERSIDE OF WIDE FLANGE BEAM. SHIM AS REQUIRED.

5 WF COLUMN TRANSFER TO BEAM CONNECTION

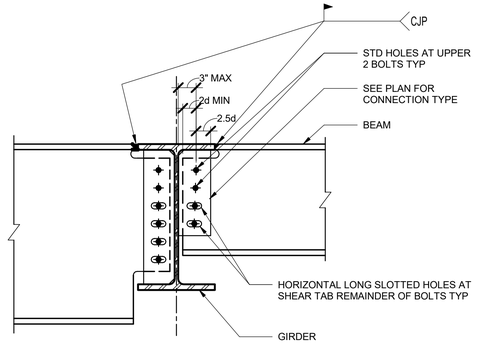

NOTES:

1. FOR CONNECTION SHOWN ON PLAN AS:
2. SEE 3/S633 IF GIRDER FLANGE THICKNESS IS LESS THAN BEAM FLANGE THICKNESS.
3. 'd' DENOTES DIAMETER OF BOLT.
4. BOLTS SHALL BE PER THE STANDARD TPE SHEAR CONNECTION IN SCHEDULE 6/S630 BUT FULLY PRETENSIONED.

3 TYPICAL WELDED TOP FLANGE DRAG STRUT CONNECTION - BEAM TO GIRDER

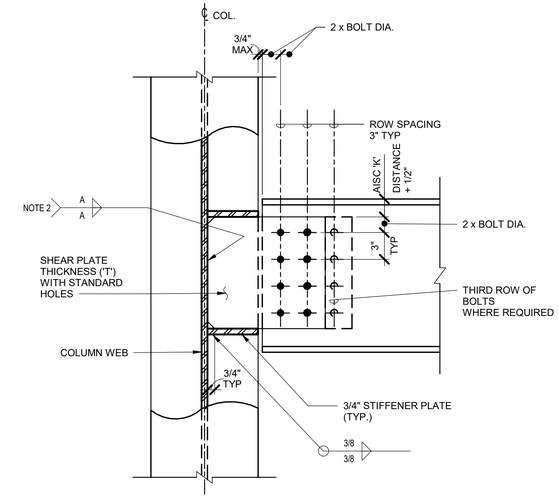

NOTES:

1. THIS DETAIL APPLIES FOR CONNECTIONS SHOWN ON PLAN AS:
2. SEE DRAG STRUT CONNECTION SCHEDULE 4/S637 FOR WELD SIZE, PLATE THICKNESS, BOLT ROW SPAING AND NUMBER OF BOLTS.

1 BOLTED DRAG STRUT CONNECTION - BEAM TO COLUMN WEB

BEAM BEING BRACED	CONNECTING BEAM	CONNECTION DETAIL	SHEAR PLATE THICKNESS ('T')	FASTENERS 7/8" DIA A490-SC BOLTS	KICKER SIZE
W14, W18	W12, W14x30 AND LARGER	4/S630	1/2"		-
W21, W24	W18x35 AND LARGER	4/S630	1/2"		-

NOTES:

1. THIS DETAIL APPLIES TO FULL DEPTH CONNECTION NOTED AS ON PLANS
2. PROVIDE STANDARD HOLES AS PER AISC, TYP UNO
3. SHEAR PLATES SHALL BE ASTM A572 GRADE 50

6 FULL DEPTH BEAM TO BEAM CONNECTION SCHEDULE

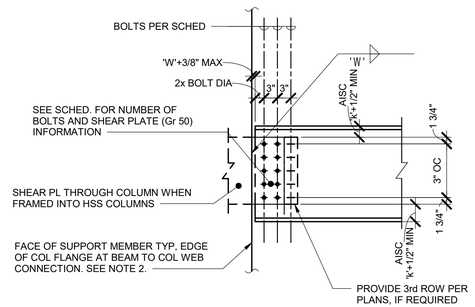

DOUBLE AND TRIPLE ROW BOLTED BEAM CONNECTION SCHEDULE

			DOUBLE ROW		TRIPLE ROW	
BEAM SIZE	NUMBER OF A490-SC BOLTS PER ROW	BOLT DIA (INCH)	SHEAR PLATE THK (INCH)	WELD SIZE ' W ' (INCH)	SHEAR PLATE THK (INCH)	WELD SIZE ' W ' (INCH)
W12, W14	3	1 1/8	1/2	3/8	1	7/8
W16, W18	4	1 1/8	3/4	1/2	1 1/4	7/8
W21	5	1 1/8	3/4	1/2	1 1/4	7/8
W24	6	1 1/8	3/4	1/2	1 1/4	7/8
W27	7	1 1/8	1	5/8	1 1/4	7/8
W30	8	1 1/8	1	7/8	1 1/2	1 3/8
W36	10	1 1/8	1 1/4	1 1/8	1 1/2	1 3/8
W40	10	1 1/8	1 1/4	1 1/8	1 1/2	1 3/8

SHEAR PLATE BOLT SPACING

NOTES:

1. THIS DETAIL APPLIES FOR CONNECTIONS SHOWN ON PLANS AS:
   DOUBLE BOLT ROW
   TRIPLE BOLT ROW
2. SHEAR PLATE SHALL CLEAR AISC 'k' REGION.
3. SEE TYPICAL DETAILS ON S634 FOR THE APPLICABLE SUPPORT MEMBER CONDITION FOR ADDITIONAL INFORMATION.

4 DOUBLE AND TRIPLE ROW BOLTED DRAG STRUT CONNECTION

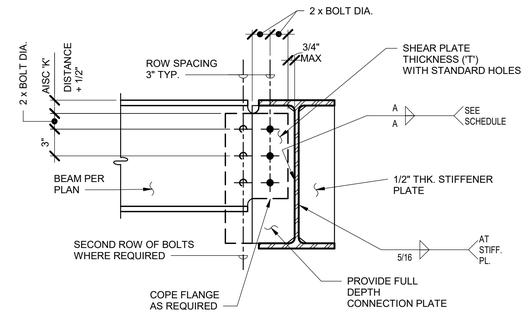

NOTES:

1. THIS DETAIL APPLIES FOR CONNECTIONS SHOWN ON PLAN AS:
2. SEE DRAG STRUT CONNECTION SCHEDULE 4/S637 FOR WELD SIZE, PLATE THICKNESS, BOLT ROW SPACING AND NUMBER OF BOLTS.

2 BOLTED DRAG STRUT CONNECTION - BEAM TO BEAM

NOT FOR CONSTRUCTION

09.AUG.21

belzberg architects
2321 MAIN STREET
SANTA MONICA, CA 90405
310.453.9611
www.belzbergarchitects.com

ARUP
Arup North America Ltd.
900 Wilshire Boulevard,
19th Floor
Los Angeles CA 90017
Tel: 310 578 4400
www.arup.com

#	DESCRIPTION	DATE

TYPICAL STEEL DETAILS

PROJECT NUMBER:

S637

8/10/2021 5:30:43 PM

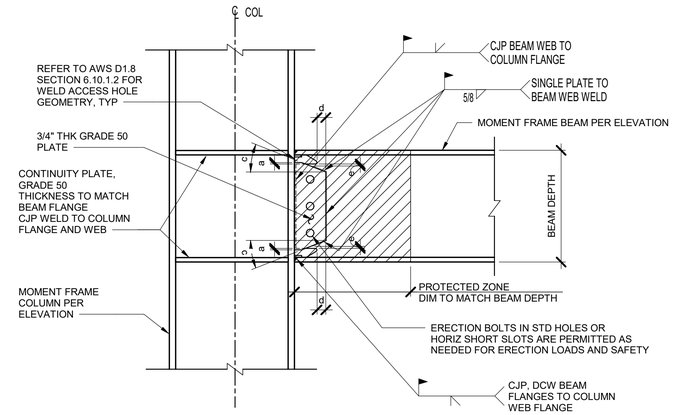

NOTES:

1. REFER TO LADBS QUALITY ASSURANCE PLAN ON SHEETS S005 THROUGH S007 FOR ADDITIONAL INFORMATION ON WELDING INCLUDING TREATMENT OF WELD TABS AND BACKING BARS ETC.
2. USE THE FOLLOWING VALUES FOR DETERMINING THE GEOMETRY.

a = 1/4" MIN, 1/2" MAX
b = 1" MIN
c = 30 DEG (±10 DEG)
d = 2" MIN (MIN DISTANCE FROM WELD ACCESS HOLE TO EDGE OF SHEAR TAB)
e = 1/2" MIN DISTANCE, 1" MAX DISTANCE FROM END OF FILLET WELD TO EDGE OF ACCESS HOLE

1 WUF-W CONNECTION DETAIL (SFRS)

NOT FOR CONSTRUCTION

09.AUG.21

belzberg architects
2321 MAIN STREET
SANTA MONICA, CA 90405
310.453.9611
www.belzbergarchitects.com

ARUP
Arup North America Ltd.
900 Wilshire Boulevard,
19th Floor
Los Angeles CA 90017
Tel: 310 578 4400
www.arup.com

#	DESCRIPTION	DATE

SPECIAL MOMENT FRAME DETAILS

PROJECT NUMBER:

S638

8/10/2021 5:30:44 PM

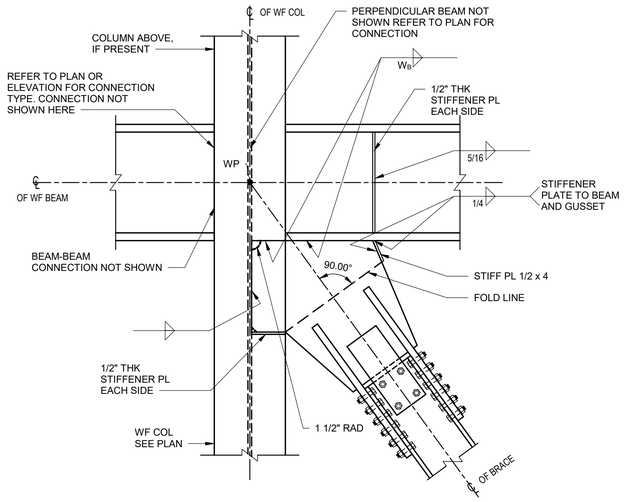

5 BEAM - COLUMN SCBF GUSSET CONNECTION TO WEB

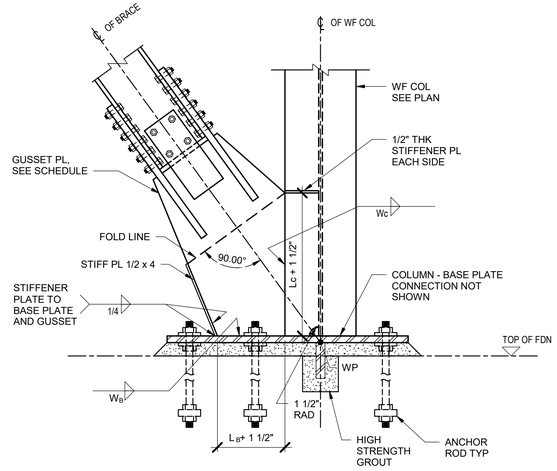

NOTES:

1. DETAIL IS INDICATIVE ONLY. SHOWN NUMBER AND SIZE OF BOLTS, ANCHOR RODS IS NOT FINAL.

3 COLUMN - BASE PLATE SCBF GUSSET CONNECTION TO WEB

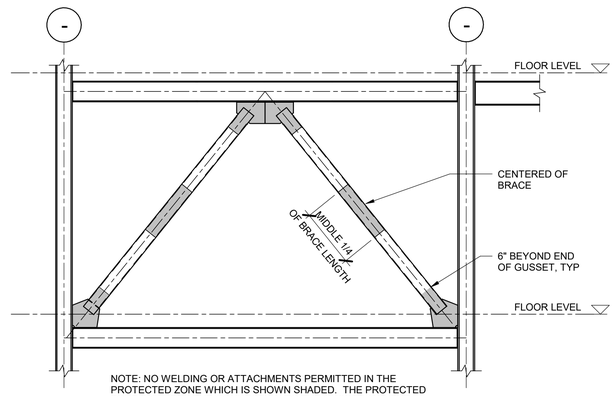

NOTE: NO WELDING OR ATTACHMENTS PERMITTED IN THE PROTECTED ZONE WHICH IS SHOWN SHADED. THE PROTECTED ZONE INCLUDES THE CONNECTION TO THE GUSSET AND THE GUSSET PLATE PER AISC.

1 SCBF PROTECTED ZONE

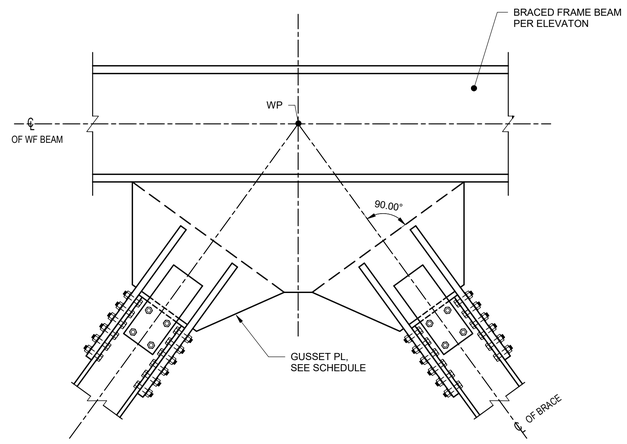

6 BEAM -- BRACE SCBF GUSSET CONNECTION

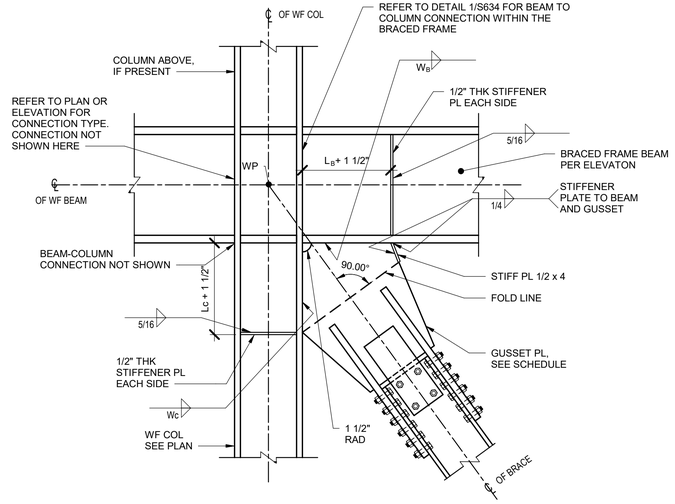

4 BEAM - COLUMN SCBF GUSSET CONNECTION TO FLANGE

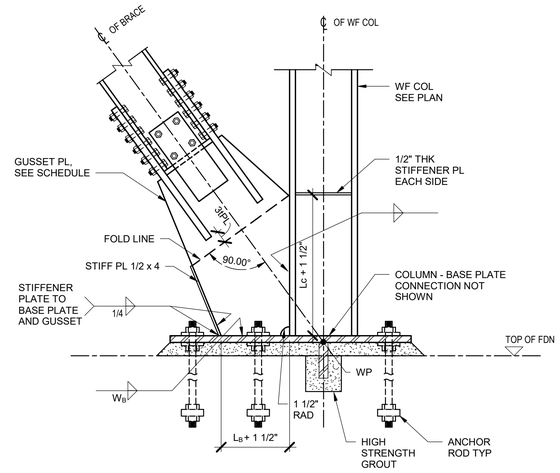

NOTES:

1. DETAIL IS INDICATIVE ONLY. SHOWN NUMBER AND SIZE OF BOLTS, ANCHOR RODS IS NOT FINAL.

2 COLUMN - BASEPLATE SCBF GUSSET CONNECTION TO FLANGE

NOT FOR CONSTRUCTION

09.AUG.21

belzberg architects
2321 MAIN STREET
SANTA MONICA, CA 90405
310.453.9611
www.belzbergarchitects.com

ARUP
Arup North America Ltd.
900 Wilshire Boulevard,
19th Floor
Los Angeles CA 90017
Tel: 310 578 4400
www.arup.com

#	DESCRIPTION	DATE

SFRS STEEL SPECIAL CONCENTRIC BRACED FRAME DETAILS

PROJECT NUMBER:

S640

8/10/2021 5:30:47 PM

SLAB TYPE (MARK ON PLAN)	Deck Profile (APPROVAL)	GAUGE	MINIMUM SECTION PROPERTIES PER FT			CONCRETE FILL		SLAB REINFORCEMENT	DECK ATTACHMENT TYPE				SIDE LAP	SHEAR STUD (DIA x AFTER-WELD LENGTH)	REMARKS
									TO PERIMETER SUPPORT		TO INTERMEDIATE SUPPORT				
			I (in4)	+S (IN4)	-S (IN4)	TYPE	MINIMUM THICKNESS ABOVE TOP FLUTE		PERPENDICULAR TO DECK	PARALLEL TO DECK	PERPENDICULAR TO DECK	PARALLEL TO DECK			
D-1	W3 FORMLOK	18	1.203	0.767	0.767	LIGHT WEIGHT CONCRETE	3 1/4"	#4@12" OC EW	3/4" DIA PUDDLE WELD ALL DOWN FLUTES	3/4" DIA PUDDLE AT 12" OC	3/4" DIA PUDDLE WELD ALL DOWN FLUTES	3/4" DIA PUDDLE AT 12" OC	BUTTON PUNCH AT 24" OC	3/4" x 5"	
D-2	W2 FORMLOK	18	0.564	0.471	0.481	LIGHT WEIGHT CONCRETE	2 1/2"	#4@12" OC EW	3/4" DIA PUDDLE WELD ALL DOWN FLUTES	3/4" DIA PUDDLE AT 12" OC	3/4" DIA PUDDLE WELD ALL DOWN FLUTES	3/4" DIA PUDDLE AT 12" OC	BUTTON PUNCH AT 24" OC	3/4" x 3 1/2"	

NOTES:

1. WHEREVER POSSIBLE, DECK LAYOUTS SHALL PROVIDE SHEETS OF SUFFICIENT LENGTH TO SPAN CONTINUOUSLY ACROSS AT LEAST THREE SPANS. ENDS SHALL TERMINATE OVER A SUPPORT PERPENDICULAR TO THE DECK SPAN, EXCEPT AT OPENINGS OR BUILDING EDGES WHERE DECKS MAY BE CANTILEVERED.
2. WHEN DECK IS CONTINUOUS OVER THREE SPANS, DECK DOES NOT REQUIRE VERTICAL SHORING DURING CONCRETE FILL PLACEMENT. FOR OTHER LAYOUTS, SHORE DECK AS REQUIRED BY MANUFACTURER.
3. DECK SHALL HAVE A MINIMUM OF 2" BEARING AT ALL SUPPORTING MEMBERS PERPENDICULAR TO DECK SPAN AND 2" AT ALL MEMBERS PARALLEL TO DECK SPAN.
4. WHERE TWO ADJACENT DECK SHEETS ARE SUPPORTED BY ONE FRAMING MEMBER, EACH SHEET SHALL INDIVIDUALLY SATISFY THE REQUIREMENTS OF NOTE 3 AND OF THE ATTACHMENT SCHEDULE.
5. DO NOT SUSPEND PIPING, LIGHT FIXTURES, CONDUITS OR OTHER UTILITIES FROM METAL DECK ALONE.
6. CONDUIT MAY BE PLACED IN SLAB ON METAL DECK SUBJECT TO THE REQUIREMENTS OF DETAIL X/SXXX.
7. DIAMETER OF PUDDLE WELD SHOWN REPRESENTS EFFECTIVE FUSION AREA.
8. PUDDLE WELD SHOWN MAY BE REPLACED WITH SAME NUMBER OF SHEAR STUDS WELDED THROUGH DECK ON A ONE-TO-ONE BASIS.
9. CONCRETE FILL THICKNESS SHOWN ON FRAMING PLANS AND DETAIL SHEETS ARE MINIMUM THICKNESSES. NO ALLOWANCES HAVE BEEN SHOWN FOR ADDITIONAL CONCRETE FILL REQUIRED TO COMPENSATE FOR BEAM OR DECK DEFLECTIONS AND TO MAINTAIN SURFACE TOLERANCES SPECIFIED.
10. UNLESS NOTED OTHERWISE STUDS SHALL BE 3/4" DIAMETER AND 4" LONG AFTER WELDING. HOWEVER A MINIMUM, THE SHEAR STUDS SHALL EXTEND AT MINIMUM 1.5" OVER THE FLUTES AND THE CONCRETE COVER SHALL NOT BE LESS THAN 0.5".
11. MAXIMUM DECK SPAN PRIOR TO CONCRETE REACHING ITS STRENGTH SHALL BE LIMITED TO THE VALUES (Lmax) INDICATED IN REMARKS. USE THE SAME VALUES FOR MULTIPLE SPAN IF NOT SPECIFICALLY SHOWN IN THE REMARKS

5 METAL DECK SCHEDULE

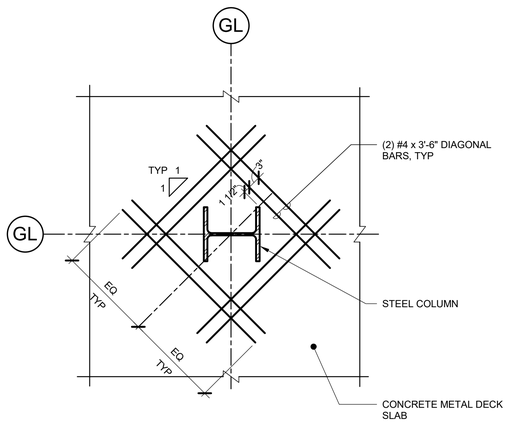

NOTES:

1. PLACE BARS AT CENTER OF CONCRETE FILL.
2. SEE 6/S651 FOR TYPICAL DETAIL OF METAL DECK AT COLUMN SUPPORT.

6 TYPICAL METAL DECK SLAB REINFORCING AT STEEL COLUMN

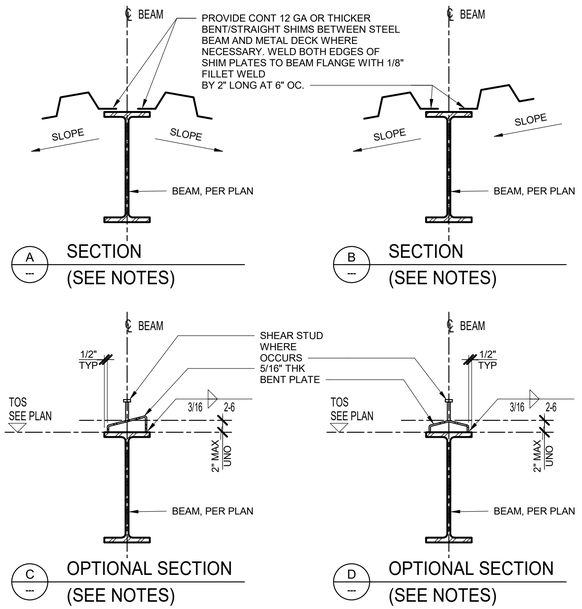

NOTES:

1. FOR SLOPES SEE PLAN.
2. ALL STEEL BEAM WEBS ARE ORIENTED TO ALIGN WITH THE VERTICAL PLANE, AND ARE NOT ROTATED.
3. METAL DECK CONTRACTOR SHALL CUT DECKING AT STEEL BEAMS TO ALLOW NECESSARY BENDING OF METAL DECK TO ACHIEVE BEARING/CONNECTION TO STEEL BEAM. SEE DETAILS 'A' AND 'B'.
4. WHERE DETAILS 'C' AND 'D' ARE SELECTED TO BE USED BY THE CONTRACTORS, THE FOLLOWING SHALL BE DONE:
   A. THE STEEL CONTRACTOR SHALL ADJUST TOP OF STEEL ELEVATIONS AT BEAMS TO ALLOW THE INSTALLATION OF BENT PLATES.
   B. THE STEEL CONTRACTOR SHALL COORDINATE THIS WORK WITH THE METAL DECK CONTRACTOR.
5. WIDE FLANGE BEAM CONDITIONS ARE SHOWN, WHEN HSS BEAMS OCCUR DETAILS ARE SIMILIAR.

4 STEEL BEAM DETAILS TO RECEIVE SLOPING METAL DECK

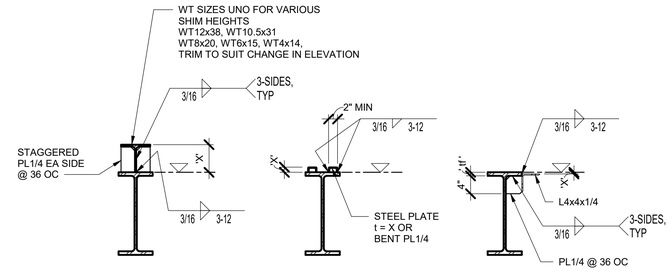

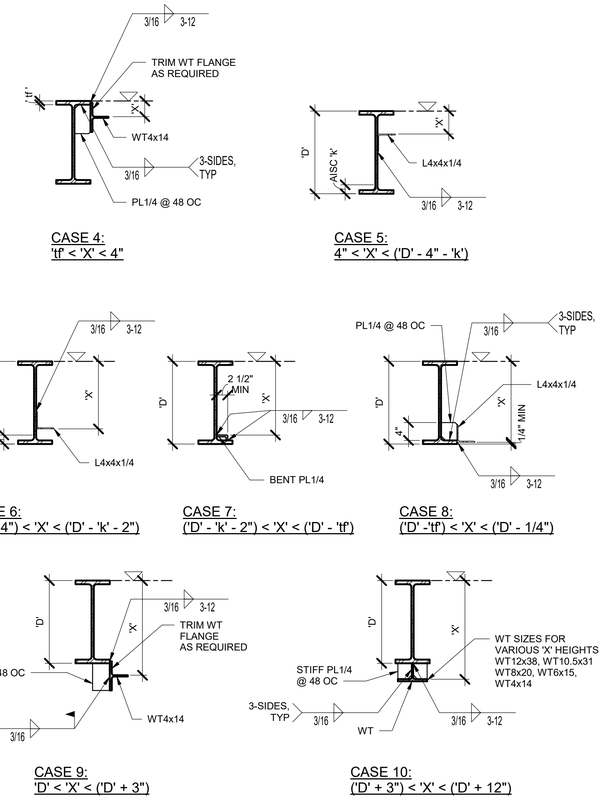

2 TYPICAL DECK SUPPORT AT ELEVATIONS OTHER THAN BEAM TOP OF STEEL

NOT FOR CONSTRUCTION

09.AUG.21

belzberg architects
2321 MAIN STREET
SANTA MONICA, CA 90405
310.453.9611
www.belzbergarchitects.com

ARUP
Arup North America Ltd.
900 Wilshire Boulevard,
19th Floor
Los Angeles CA 90017
Tel: 310 578 4400
www.arup.com

#	DESCRIPTION	DATE

TYPICAL METAL DECK DETAILS

PROJECT NUMBER:

S650

8/10/2021 5:30:51 PM

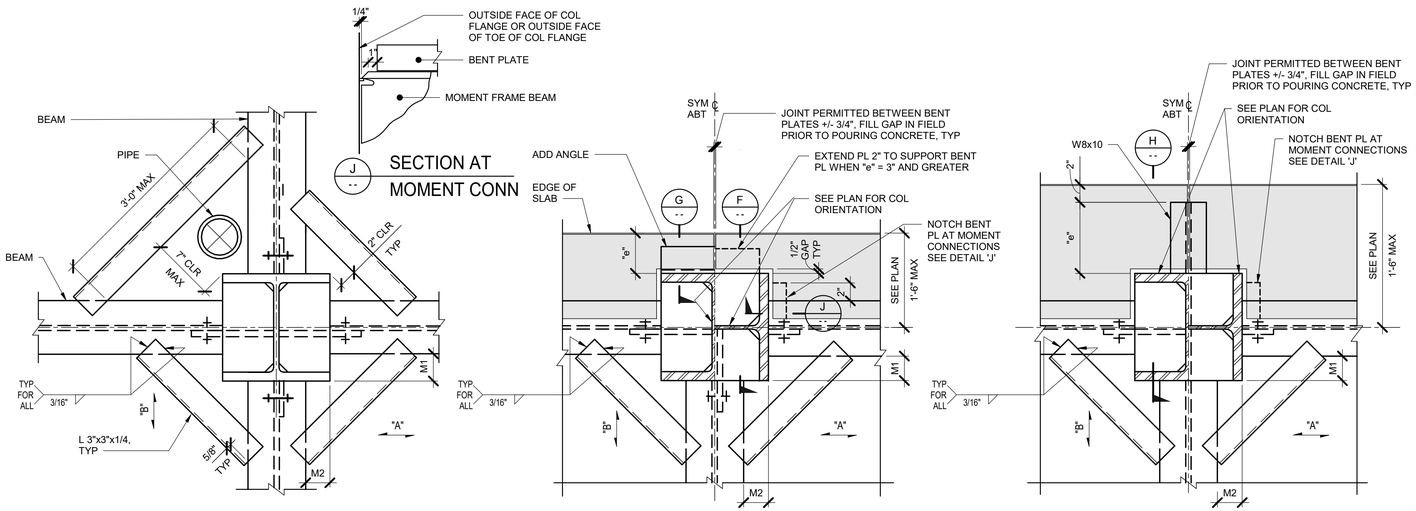

A INTERIOR COLUMN

NOTE: OMIT ANGLE IN DECK DIR. "A" WHEN M1 ≤ 6" OR IN DECK DIR. "B" WHEN M2 ≤ 6".

e ≤ 8"

B EXTERIOR COLUMN

NOTE: OMIT ANGLE IN DECK DIR. "A" WHEN M1 ≤ 6" OR IN DECK DIR. "B" WHEN M2 ≤ 6".

e > 8"

C EXTERIOR COLUMN

NOTES:
1. OMIT ANGLE IN DECK DIR. "A" WHEN M1 ≤ 6" OR IN DECK DIR. "B" WHEN M2 ≤ 6".
2. SEE DETAIL 'B' FOR INFORMATION NOT SHOWN.

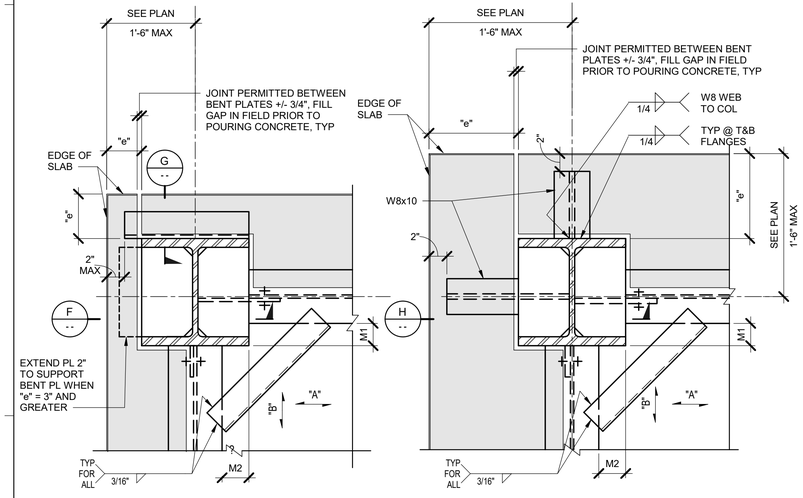

D CORNER COLUMN

NOTES:
1. OMIT ANGLE IN DECK DIR. "A" WHEN M1 ≤ 6" OR IN DECK DIR. "B" WHEN M2 ≤ 6".
2. SEE DETAIL 'B' FOR INFORMATION NOT SHOWN.

e ≤ 8"

e > 8"

E CORNER COLUMN

NOTES:
1. OMIT ANGLE IN DECK DIR. "A" WHEN M1 ≤ 6" OR IN DECK DIR. "B" WHEN M2 ≤ 6".
2. SEE DETAIL 'B' FOR INFORMATION NOT SHOWN.

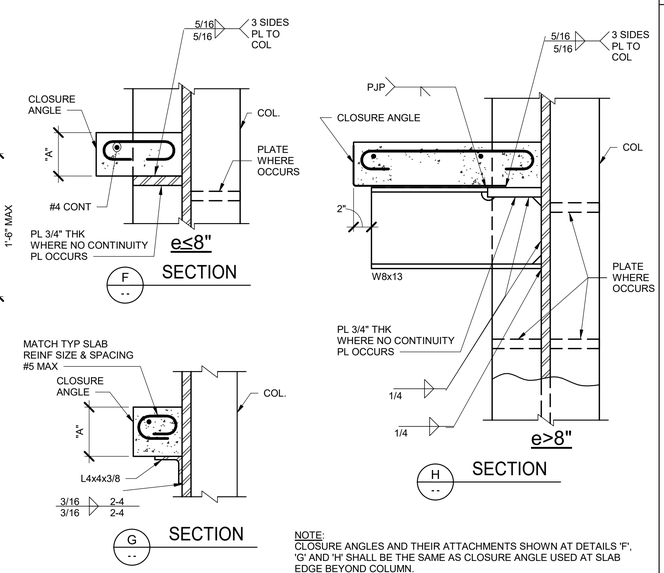

NOTE:
CLOSURE ANGLES AND THEIR ATTACHMENTS SHOWN AT DETAILS 'F', 'G' AND 'H' SHALL BE THE SAME AS CLOSURE ANGLE USED AT SLAB EDGE BEYOND COLUMN.

6 TYPICAL SUPPPORT OF METAL DECK AT WF COLUMNS

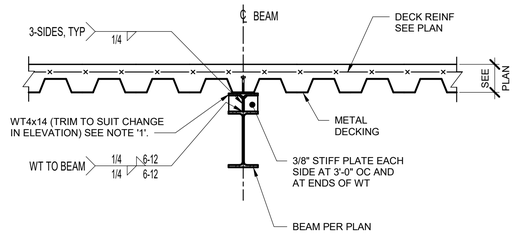

DECK FLUTES PARALLEL WITH BEAM

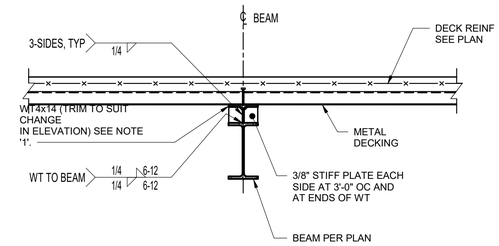

DECKING PERPENDICULAR TO BEAM

NOTES:

1. USE WT PER CASE 1 IN 2/S650 (TRIM TO SUIT CHANGE IN ELEVATION) INSTEAD OF WT4x14 WHERE DEPRESSION BEYOND EXCEEDS 4" UNO.

1 WT ON TOP OF FLOOR BEAM DETAIL

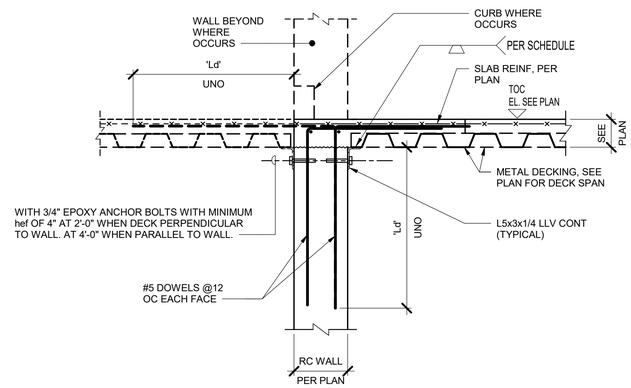

NOTES:

1. STAGGER ANCHOR BOLTS WHERE SLAB OCCURS AT BOTH SIDES OF WALL.
2. CONCRETE WALL REINFORCEMENT NOT SHOWN FOR CLARITY.
3. JOINTS IN CONTINUOUS ANGLE TO BE PARTIAL PENETRATION GROOVE WELD.

2 METAL DECK TO CONCRETE WALL CONNECTION DETAIL

NOT FOR CONSTRUCTION

09.AUG.21

belzberg architects
2321 MAIN STREET
SANTA MONICA, CA 90405
310.453.9611
www.belzbergarchitects.com

ARUP
Arup North America Ltd.
900 Wilshire Boulevard,
19th Floor
Los Angeles CA 90017
Tel: 310 578 4400
www.arup.com

#	DESCRIPTION	DATE

TYPICAL METAL DECK DETAILS

PROJECT NUMBER:

S651

8/10/2021 5:30:56 PM

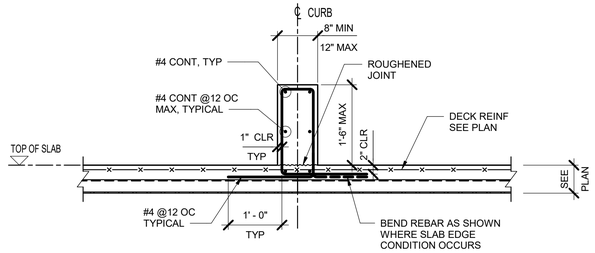

A -- SECTION

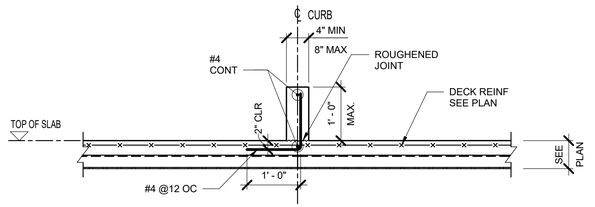

B -- SECTION

NOTES:

1. SEE ARCHITECTURAL DRAWINGS FOR LOCATION AND DIMENSIONS OF CONCRETE CURBS, UNO ON PLANS.

5 CONCRETE CURB ON METAL DECK

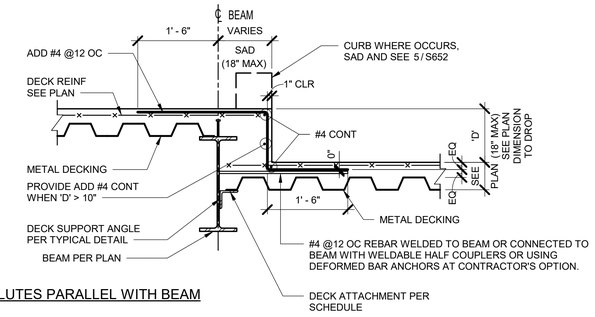

DECK FLUTES PARALLEL WITH BEAM

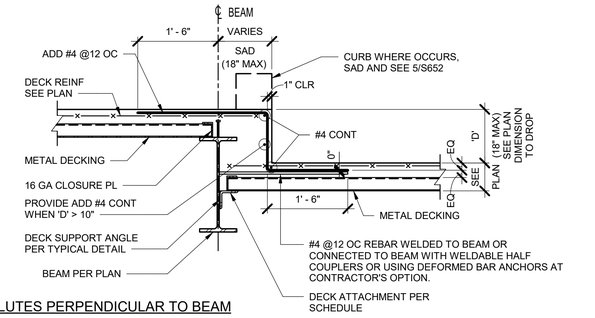

DECK FLUTES PERPENDICULAR TO BEAM

3 SLAB DEPRESSION DETAIL (DEPRESSION GREATER THAN 4")

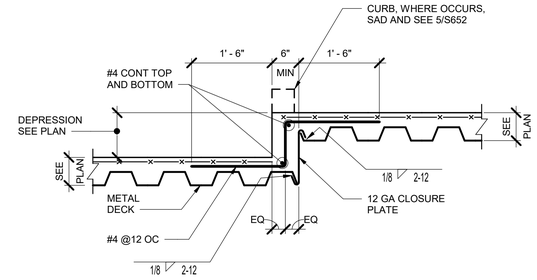

1 EDGE OF DEPRESSION PARALLEL WITH DECK SPAN

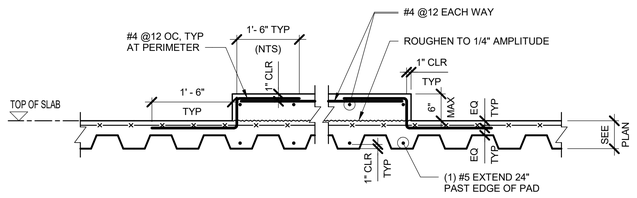

A -- EQUIPMENT BASE POURED AFTER CONCRETE FILL REACHES DESIGN STRENGTH

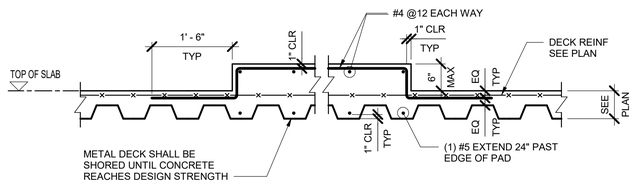

B -- EQUIPMENT BASE POURED MONOLITHICALLY WITH CONCRETE FILL

NOTES:

1. SEE MECHANICAL, ELECTRICAL, PLUMBING AND ARCHITECTURAL DRAWINGS FOR LOCATION AND DIMENSIONS OF EQUIPMENT PADS.
2. SEE 2/S653 WHERE PAD HEIGHT EXCEEDS 6".

6 EQUIPMENT BASE ON METAL DECK

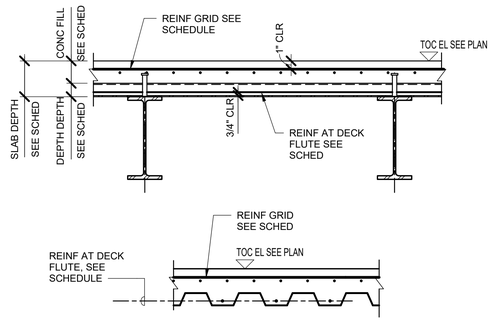

NOTES:

1. SEE PLANS FOR EXTENT OF STEEL DECK TYPE AND DETAILS AND SCHEDULE FOR DECK CONSTRUCTION.
2. DECK SHALL EXTEND OVER THREE OR MORE SPANS IF POSSIBLE.
3. PROVIDE ADDITIONAL CONCRETE AS REQUIRED TO COMPENSATE FOR THE STEEL BEAMS AND DECK DEFLECTIONS CAUSED BY THE DEAD LOAD OF WET CONCRETE.
4. THE ADDITIONAL CONCRETE THICKNESS TO COMPENSATE FOR THE DEAD LOAD DEFLECTIONS SHALL BE LIMITED TO 1/2 INCH.
5. SEE 5/S650 FOR DECK INFORMATION.

4 STEEL DECK DETAILS

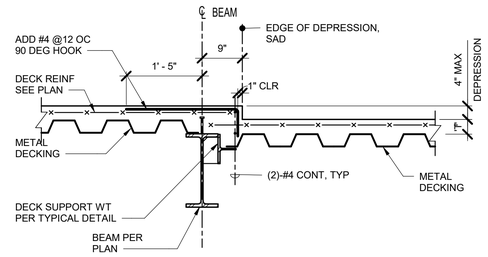

DECK FLUTES PARALLEL WITH BEAM

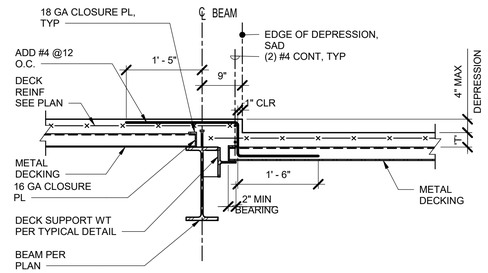

DECK FLUTES PERPENDICULAR TO BEAM

2 SLAB DEPRESSION DETAIL (DEPRESSION NOT GREATER THAN 4")

NOT FOR CONSTRUCTION

09.AUG.21

belzberg architects
2321 MAIN STREET
SANTA MONICA, CA 90405
310.453.9611
www.belzbergarchitects.com

ARUP
Arup North America Ltd.
900 Wilshire Boulevard,
19th Floor
Los Angeles CA 90017
Tel: 310 578 4400
www.arup.com

#	DESCRIPTION	DATE

TYPICAL METAL DECK DETAILS

PROJECT NUMBER:

S652

8/10/2021 5:30:58 PM

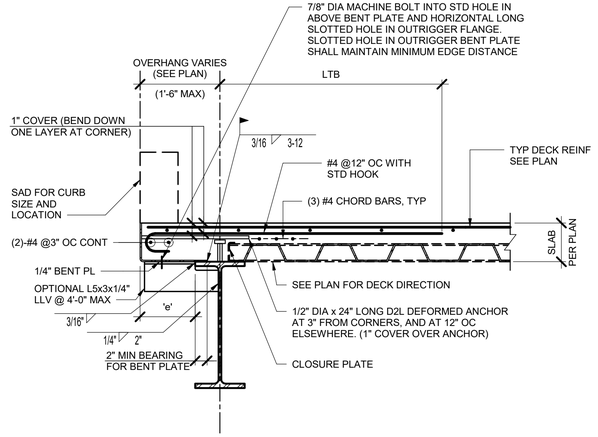

NOTES:
1. FOR ALL CONDITIONS OTHER THAN FACADE SUPPORT, ELEVATOR DOOR SILLS AND WELDED ATTACHMENTS TO THE SLAB EDGE USE 3 / S653
2. AT SPLICED JOINTS IN 1/4" THICK BENT PLATE PROVIDE D2L ANCHORS NO MORE THAN 3" EITHER SIDE OF SPLICE. SPLICED JOINTS ARE NOT REQUIRED TO BE WELDED. MAX JOINT GAP SHALL BE 3/8".
3. WHERE OPTIONAL OUTRIGGER ANGLE PROVIDED TO SUPPORT BENT PLATE, WELD CAN BE REDUCED TO A TACK WELD TO FLANGE. WHERE OUTRIGGER IS PROVIDED, 2" MIN OVERLAP BETWEEN BENT PLATE AND BEAM FLANGE MAY REDUCE TO 3/4" MIN. WHERE BEAM FLANGE IS < 1/2" PROVIDE PJP, TOP OF OUTRIGGER FLANGE, IN FLAT POSITION IN LIEU OF FILLET WELD. ANGLES SPECIFIED IN THIS DETAIL MAY BE SUBSTITUTED WITH BENT PLATE. THICKNESS AND LEG DIMENSIONS MUST MATCH.
4. CHORD REINFORCING SHALL HAVE A MINIMUM SPACING OF 3 BAR DIAMETERS, BUT NOT LESS THAN 1 1/2" AND A MINIMUM CONCRETE COVER OF 1".
5. 1/4" THICK CONTINUOUS PLATE MIGHT BE SPLICED, PROVIDE D2L ANCHORS NO MORE THAN 3" EITHER SIDE OF SPLICE.

5 TYPICAL SLAB EDGE WITH OVERHANG < 1'-6"

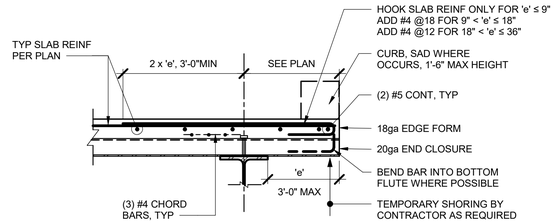

DECK SPAN - PERPENDICULAR

THICKNESS OF CLOSURE ANGLE, GA									
'D' MAX \ 'e' MAX	0"	2"	3"	4"	5"	6"	7"	8"	9"
5 1/2"	16	16	16	16	14	12	12	10	10
6 1/2"	16	16	16	14	12	12	12	10	10
7 1/2"	16	16	14	14	12	12	10	10	-
9"	14	14	14	12	12	10	10	-	-

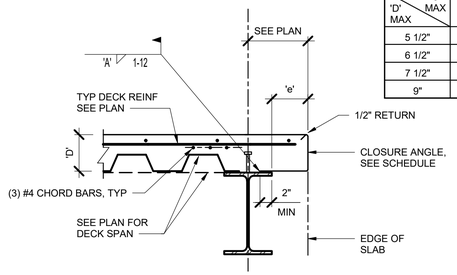

WELD SCHEDULE	
BENT PLATE THICKNESS	WELD 'A'
16 GA	3/32"
14 GA AND THICKER	1/8"

DECK SPAN - PARALLEL

NOTES:
1. REFER TO DETAILS 4 / S653 AND 5 / S653 FOR SLAB EDGES SUPPORTING FACADE ELEMENTS AND WELDED ATTACHMENTS TO THE SLAB EDGE.
2. REFER TO DETAIL 4 / S653 WHEN THE EDGE DISTANCE 'e' EXCEEDS 9" AT THE DECK PARALLEL CONDITION.
3. NO WALLS, CURBS LARGER THAN STATED OR ANY SIGNIFICANT WEIGHT ATTACHMENT PERMITTED AT DECK CANTILEVER.
4. GUARD RAIL POST ATTACHMENT AT CANTILEVER END PERMITTED. REFER TO DETAIL X/SXXX.
5. CHORD REINFORCEMENT PER 3/S653 AND 4 / S653.

3 EDGE OF SLAB WITHOUT BENT PLATE

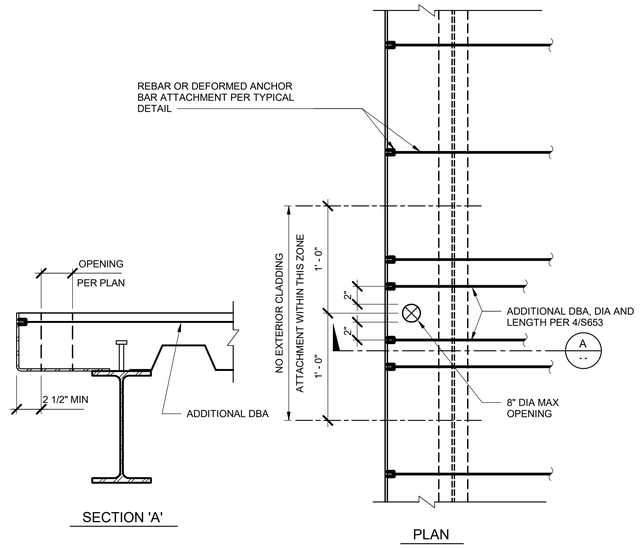

SECTION 'A'

PLAN

NOTES:
1. DOES NOT APPLY IF OUTRIGGER DETAIL PER 4 / S653 IS USED.

1 OPENING IN METAL EDGE OF DECKS

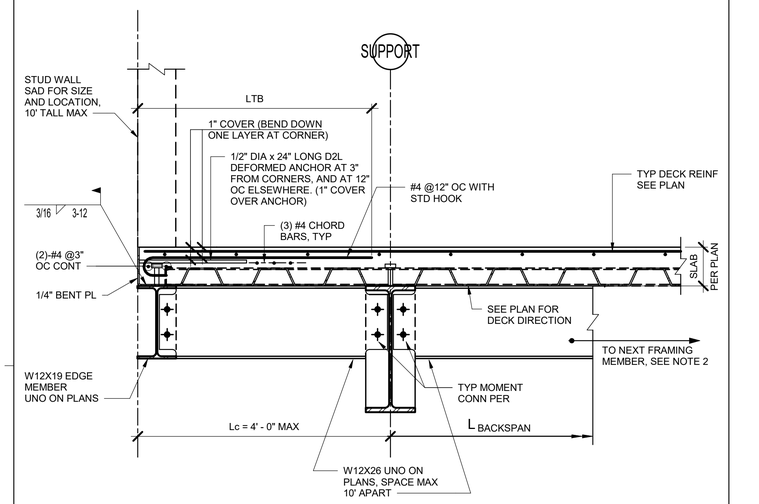

NOTES:
1. SEE 5 / S653 FOR INFO NOT SHOWN.
2. IF L BACKSPAN EXCEEDS 2xLc, PROVIDE A CROSS-FRAMING W12X26 TO TERMINATE THE BEAM AT BACKSPAN.

6 TYPICAL SLAB EDGE WITH 2'-4" < OVERHANG < 4'

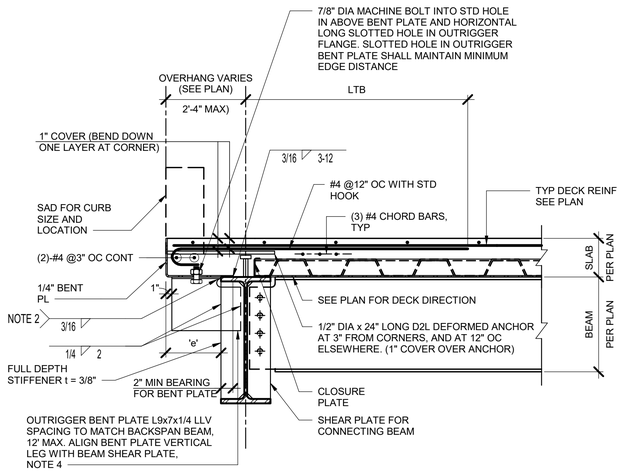

NOTES:
1. FOR ALL CONDITIONS OTHER THAN FACADE SUPPORT AND WELDED ATTACHMENTS TO THE SLAB EDGE USE 3 / S653 .
2. WHERE BEAM FLANGE IS < 1/2" PROVIDE PJP AT TOP OF OUTRIGGER FLANGE IN LIEU OF FILLET WELD.
3. OPTION TO SUBSTITUTE WITH ANGLE (THICKNESS AND LEG DIMENSIONS TO MATCH) CHORD REINFORCING SHALL HAVE A MINIMUM SPACING OF 3 BAR DIAMETERS, BUT NOT LESS THAN 1 1/2" AND A MINIMUM CONCRETE COVER OF 1".
4. 1/4" THICK CONTINUOUS PLATE MIGHT BE SPLICED, PROVIDE D2L ANCHORS NO MORE THAN 3" EITHER SIDE OF SPLICE.

4 TYPICAL SLAB EDGE WITH 1'-6" < OVERHANG < 2'-4"

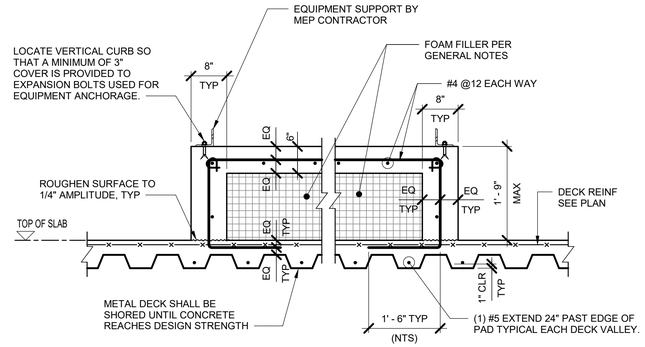

(A) TYPICAL EQUIPMENT PAD ON METAL DECK DETAIL

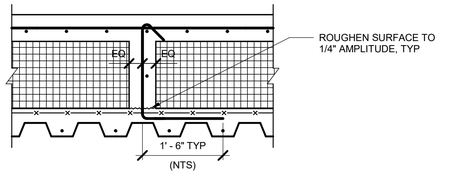

(B) INTERMEDIATE CURB DETAIL

NOTES:
1. SEE MECHANICAL, ELECTRICAL, PLUMBING AND ARCHITECTURAL DRAWINGS FOR LOCATION AND DIMENSIONS OF EQUIPMENT PAD.
2. PAD SHALL BE POURED AFTER CONCRETE FILL REACHES DESIGN STRENGTH.
3. SEE 6 / S652 WHERE PAD HEIGHT EQUAL/LESS THAN 6".
4. INTERMEDIATE CURB REQUIRED FOR SLAB ON FOAM WHERE SPAN IS GREATER THAN 10'.

2 EQUIPMENT PAD ON METAL DECK (6" < PAD HEIGHT <= 1'-9")

NOT FOR CONSTRUCTION

09.AUG.21

ba
belzberg architects
2321 MAIN STREET
SANTA MONICA, CA 90405
310.453.9611
www.belzbergarchitects.com

ARUP
Arup North America Ltd.
900 Wilshire Boulevard,
19th Floor
Los Angeles CA 90017
Tel: 310 578 4400
www.arup.com

#	DESCRIPTION	DATE

TYPICAL METAL DECK DETAILS

PROJECT NUMBER:

S653

8/10/2021 5:31:01 PM

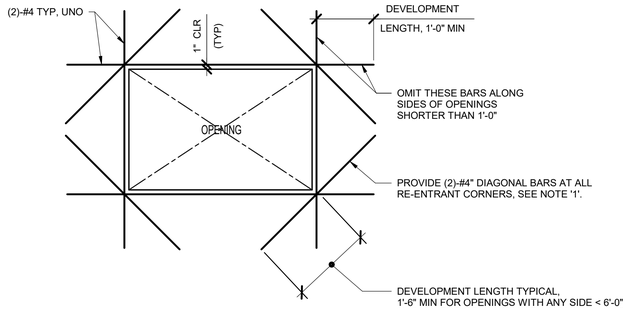

NOTES:

1. OMIT DIAGONAL BARS FOR OPENING LESS THAN 9" SQUARE 12" ROUND.
2. REINFORCING IS SIMILAR AT ROUND OPENINGS.

5 SLAB REINF. AT METAL DECK OPENINGS

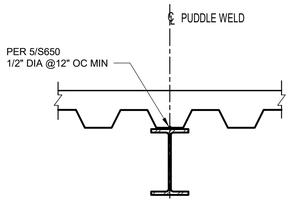

A -- BOTTOM FLUTE CENTERED AT SUPPORT

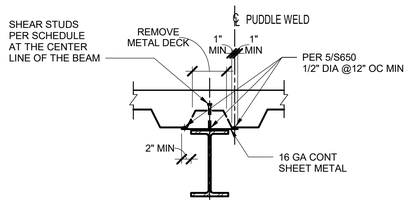

ALTERNATIVE TO CONDITION 'B' DETAIL F WHEN MIN CLEARANCE FROM STUD TO DECK FLUTE CANNOT BE ATTAINED

B -- DECK PARALLEL TO BEAM

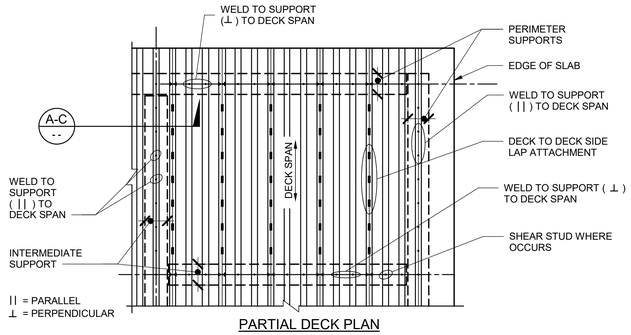

PARTIAL DECK PLAN

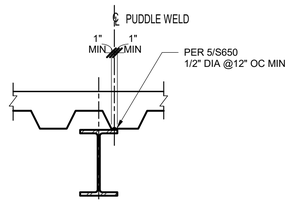

C -- BOTTOM FLUTE NOT CENTERED AT SUPPORT (ONLY ALLOWED AT MINOR BEAMS AROUND OPENINGS)

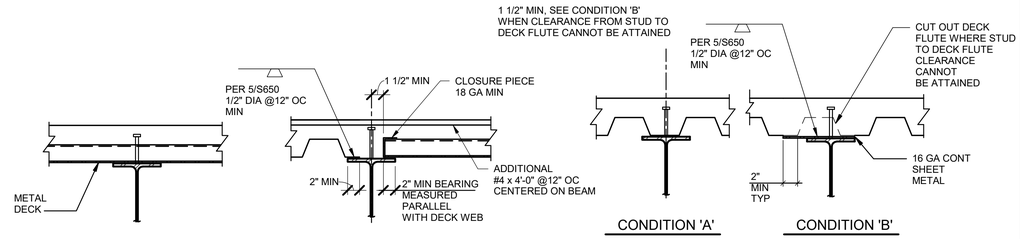

D -- DECK PERPENDICULAR TO BEAM

E -- DECK TRANSITION ON BEAM

F -- DECK PARALLEL TO BEAM

NOTE:
1. SEE 6 / S655 FOR PLACEMENT OF STUDS ON STEEL BEAMS.

3 METAL DECK ATTACHMENT DETAILS

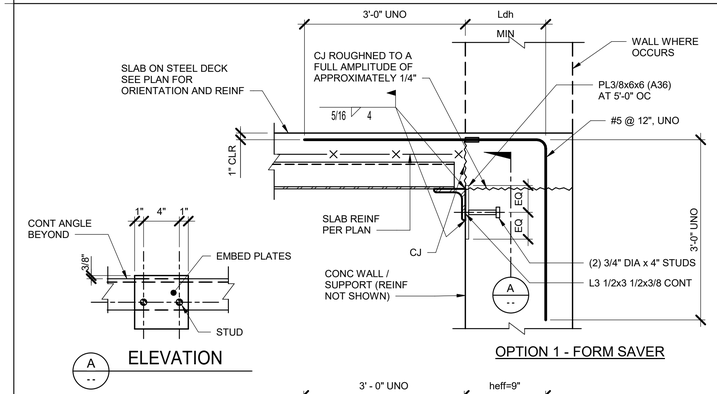

A -- ELEVATION

OPTION 1 - FORM SAVER

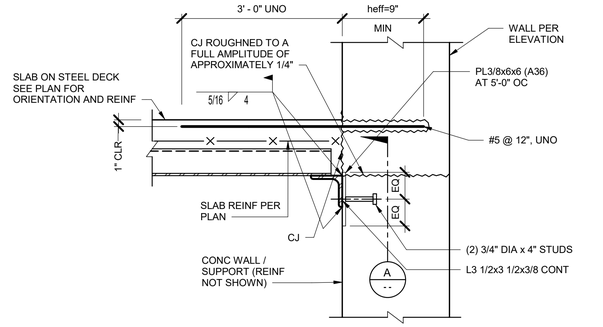

OPTION 2 - EPOXY DOWEL
(ONLY WHEN WALL CONT)

6 SLAB TO CONCRETE AT BASEMENT WALL

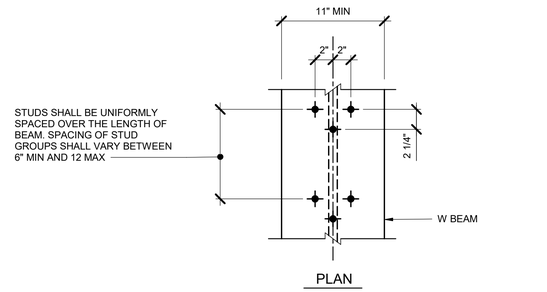

PLAN

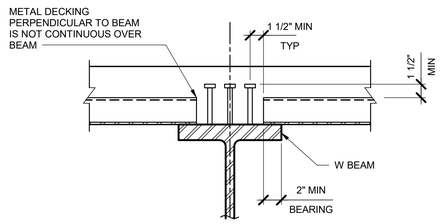

SECTION

4 STUD PLACEMENT DETAIL FOR STUD SPACING > 3 STUDS/FT <= 6 STUDS/FT

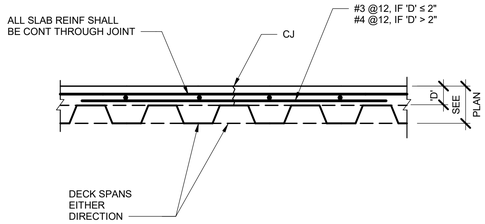

NOTES:

1. SUBMIT PROPOSED LOCATIONS OF ALL CONSTRUCTION JOINTS TO ENGINEER FOR REVIEW AND ACCEPTANCE PRIOR COMMENCEMENT OF CONSTRUCTION.

2 SLAB ON DECK CONSTRUCTION JOINT

NOT FOR CONSTRUCTION

09.AUG.21

belzberg architects
2321 MAIN STREET
SANTA MONICA, CA 90405
310.453.9611
www.belzbergarchitects.com

ARUP
Arup North America Ltd.
900 Wilshire Boulevard,
19th Floor
Los Angeles CA 90017
Tel: 310 578 4400
www.arup.com

#	DESCRIPTION	DATE

TYPICAL METAL DECK DETAILS

PROJECT NUMBER:

S654

8/10/2021 5:31:03 PM

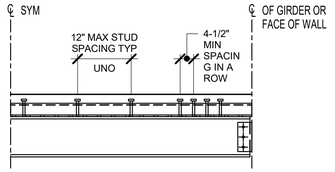

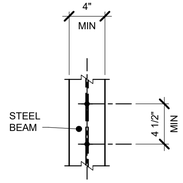

1 ROW PER FLUTE
(PLAN VIEW)

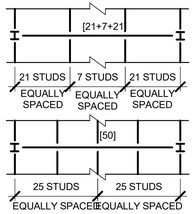

NOTE:

1. WHERE STUD SPACING IS LESS THAN 4 1/2", USE 2 ROWS OF STUDS SPACED 3" APART.

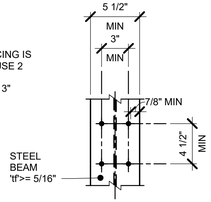

2 ROWS PER FLUTE
(PLAN VIEW)

A -- DECK PARALLEL TO BEAM/ GIRDER

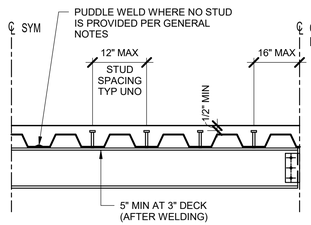

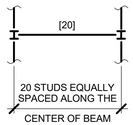

NOTE:

1. WHERE MORE THAN ONE STUD PER FLUTE IS REQUIRED PLACE 2 STUDS PER FLUTE BEGINNING AT EACH END AND WORK TOWARDS MIDSPAN OF BEAM. USE SIMILAR PROCEDURE IF MORE THAN 2 STUDS PER FLUTE ARE REQUIRED.

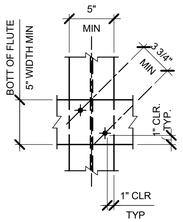

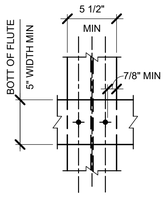

2 STUDS PER FLUTE (PLAN VIEW)

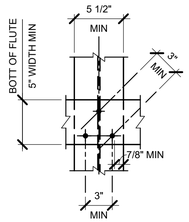

3 STUDS PER FLUTE
(PLAN VIEW)

B -- DECK PERPENDICULAR OR SKEWED TO BEAM

NOTES:

1. NUMBER OF SHEAR STUDS IS SHOWN AS [X] ON PLANS AND FRAME ELEVATIONS. STUDS AT 12" OC MINIMUM ON ALL FRAMING BEAMS.
2. SEE METAL DECK SCHEDULE IN 5/S650 FOR STUD DIAMETER AND LENGTH.

6 WELDED SHEAR STUD LAYOUTS

1 1/2" = 1'-0"

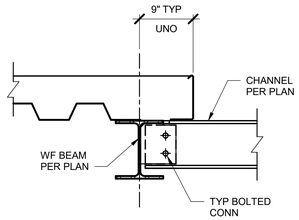

SECTION 'A'

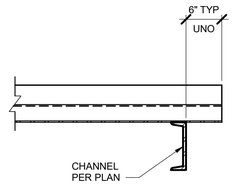

SECTION 'B'

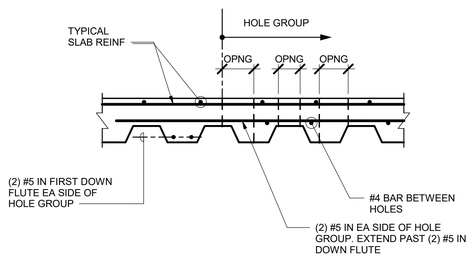

SECTION 'C'

SLAB OPENING TRIM REINF SCHEDULE	
OPENING SIZE, W	TRIM BARS AROUND OPENING
0 - 6" < W ≤ 2' - 0"	(2) - #4
2' - 6" > W > 10' - 0"	(2) - #5
10' - 0" ≥ W ≥ 18' - 0"	(2) - #6

EXTEND BARS BEYOND EDGE OF OPENING FOR DISTANCE EQUAL TP Ld, DEVELOPMENT LENGTH.

NOTES:

1. HOLES MAY BE EITHER CANNED OR CORED. IF CORED, THE CONTRACTOR SHALL LAY OUT THE HOLE LOCATIONS AND PROVIDE TRIM REBAR AS SPECIFIED PRIOR TO POURING. HOLE LOCATIONS SHALL BE CLEARLY MARKED SO THAT REBAR WILL NOT BE CUT DURING CORING. IF HOLES ARE TO BE CUT IN THE DECK PRIOR TO THE SLAB POUR, THE CONTRACTOR SHALL PROVIDE STRENGTHENING OR PROPPING IN ACCORDANCE WITH THE DECK MANUFACTURER'S REQUIREMENTS AND SEE STRUCTURAL GENERAL NOTES. ANY MISCELLANEOUS STEEL USED TO STRENGTHEN THE METAL DECK SHALL BE INSTALLED ON THE UNDERSIDE OF THE DECK.
2. CONTRACTOR SHALL COORDINATE OPENING SIZES & LOCATIONS WITH MEP CONTRACTORS AND ARCHITECTURAL DRAWINGS.
3. OPENING FRAMING SIZES SHOWN ARE TYPICAL MIN SIZE UNO ON DRAWING.

4 TYPICAL OPENING IN CONCRETE FILLED METAL DECK

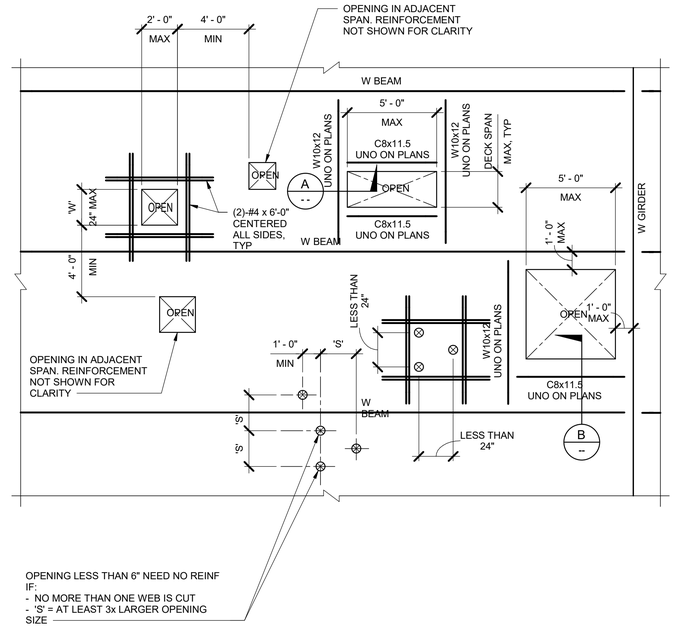

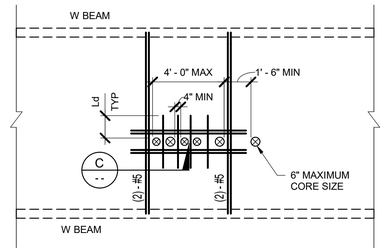

NOT FOR CONSTRUCTION

09.AUG.21

belzberg architects
2321 MAIN STREET
SANTA MONICA, CA 90405
310.453.9611
www.belzbergarchitects.com

ARUP
Arup North America Ltd.
900 Wilshire Boulevard,
19th Floor
Los Angeles CA 90017
Tel: 310 578 4400
www.arup.com

#	DESCRIPTION	DATE

TYPICAL METAL DECK DETAILS

PROJECT NUMBER:

S655

8/10/2021 5:31:05 PM

DUCTWORK SYMBOLS

SYMBOL	DESCRIPTION
32x20 / 12x6	DOUBLE-LINE AND SINGLE-LINE RECTANGULAR DUCT, FIRST NUMBER INDICATES SIDE IN VIEW IN INCHES, SECOND NUMBER INDICATES SIDE IN DEPTH IN INCHES
24ø / 12ø	DOUBLE-LINE AND SINGLE-LINE ROUND DUCT, NUMBER INDICATES DIAMETER IN INCHES
32x20(L2) / 12x6(L2)	ACOUSTICAL LINED DUCTWORK, SIZES GIVEN ARE CLEAR INSIDE DIMENSIONS IN INCHES
RorD / RorD	INCLINED RISE OR DROP IN DIRECTION OR AIR FLOW
	EXISTING DUCTWORK
	FLEXIBLE DUCT
	FLEXIBLE CONNECTION
	DIRECTION OF AIR FLOW
	TRANSITION / REDUCER
	RADIUS ELBOW WITH TURNING VANES & MITERED ELBOW WITH TURNING VANES
	VANED ELBOW OR RADIUS ELBOW (USE VANED ELBOW WHERE SPACE WILL NOT PERMIT THE USE OF LONG RADIUS ELBOW)
	DUCT - END CAP
	RECTANGULAR DUCT BRANCH
	CIRCULAR DUCT BRANCH
	RECTANGULAR SUPPLY AIR DUCT (UP AND DOWN)
	RECTANGULAR RETURN AIR DUCT (UP AND DOWN)
	RECTANGULAR EXHAUST AIR DUCT (UP AND DOWN)
	RECTANGULAR OUTSIDE AIR DUCT (UP AND DOWN)
	ROUND SUPPLY AIR DUCT (UP AND DOWN)
	ROUND RETURN AIR DUCT (UP AND DOWN)
	ROUND EXHAUST AIR DUCT (UP AND DOWN)
	ROUND OUTSIDE AIR DUCT (UP AND DOWN)
VD	VOLUME DAMPER
M	MOTORIZED DAMPER
BDD	BACKDRAFT DAMPER
FD	FIRE DAMPER
SD	SMOKE DAMPER
FSD	COMBINATION FIRE/SMOKE DAMPER
SMD	DUCT SMOKE DETECTOR
TYPE	AIR TERMINAL - SIDEWALL GRILLE/REGISTER (AIRFLOW DIRECTION AND TYPE SHOWN)
TYPE (CFM)	AIR TERMINAL - CEILING SUPPLY (AIRFLOW DIRECTION AND TYPE SHOWN)
TYPE (CFM)	AIR TERMINAL - CEILING RETURN (AIRFLOW DIRECTION AND TYPE SHOWN)
TYPE (CFM)	AIR TERMINAL - CEILING EXHAUST (AIRFLOW DIRECTION AND TYPE SHOWN)
TYPE (CFM)	AIR TERMINAL - CEILING SUPPLY - ROUND (AIRFLOW DIRECTION AND TYPE SHOWN)
TYPE (CFM)	AIR TERMINAL - CEILING RETURN - ROUND (AIRFLOW DIRECTION AND TYPE SHOWN)
TYPE (CFM)	AIR TERMINAL - CEILING EXHAUST - ROUND (AIRFLOW DIRECTION AND TYPE SHOWN)
	LINEAR DIFFUSER (AIR DIRECTION AND TYPE SHOWN)
AD	ACCESS DOOR
	TRANSFER DUCT WITH GRILLES
UC	UNDERCUT DOOR
	AIR FLOW ARROW (SUPPLY)
	AIR FLOW ARROW (RETURN/EXHAUST)
UP / DN	SLOPE DIRECTION ARROW

DUCTWORK SYMBOLS

SYMBOL	DESCRIPTION
	FAN - ROOF MOUNTED - MUSHROOM
	FAN - ROOF MOUNTED - UPBLAST
	FAN - CENTRIFUGAL
	FAN - CENTRIFUGAL PLUG/PLENUM
	FAN - AXIAL
	LOUVER
AHU	AIR HANDLING UNIT ACCESS SECTION
AHU	AIR HANDLING UNIT PLENUM SECTION
P C	COIL - PRE-HEAT
R C	COIL - RE-HEAT
C C	COIL - COOLING
H C	COIL - HEATING
DX C	COIL - DX
	FAN COIL UNIT
	VAV BOX - SINGLE DUCT
	SOUND ATTENUATOR
	AIR SEPARATOR
TS	TEMPERATURE SENSOR
R	RELATIVE HUMIDITY SENSOR
DPS	DIFFERENTIAL PRESSURE
CO	CARBON MONOXIDE SENSOR
CO2	CARBON DIOXIDE SENSOR
O	OCCUPANCY SENSOR
T	THERMOSTAT
H	HUMIDITY SENSOR
SP	STATIC PRESSURE SENSOR
XX-YY	SENSOR - SEE ABBREVIATIONS FOR TYPE
XX-YY	SENSOR (DUCT MOUNTED) - SEE ABBREVIATIONS FOR TYPE
	ROOF EXHAUST FAN (PLAN)
L (SQ.FT.)	LOUVER (DOOR AND WALL) AND LOUVER FREE AREA

GENERAL SYMBOLS AND TAGS

SYMBOL	DESCRIPTION
AHU 8	EQUIPMENT TYPE / EQUIPMENT TAG NUMBER
	LINE BREAK

PIPING SYMBOLS

SYMBOL	DESCRIPTION
	EXISTING
	NEW (LINETYPE VARIES PER SYSTEM)
	ELBOW TURN DOWN
	TEE TURN DOWN
	PIPE TURN UP
	TEE TURN UP
	CAPPED PIPE
	INSULATED PIPE
XXX / X	XXXX - SERVICE TYPE. SEE ABBREVIATIONS
R	PITCH OF PIPE (RISE)
D	PITCH OF PIPE (DROP)
	CONCENTRIC REDUCER/EXPANDER
FOB / FOT	ECCENTRIC REDUCER/EXPANDER
	PIPE ANCHOR
	UNION JOINT
	FLANGED JOINT
	EXPANSION LOOP
	EXPANSION JOINT
	PIPE ALIGNMENT GUIDE
	CHECK VALVE
	CHECK VALVE - SWING GATE
	CHECK VALVE - SPRING
	PRESSURE REDUCING VALVE
	QUICK DISCONNECT VALVE (OPENING)
	QUICK DISCONNECT VALVE (CLOSING)
	LOCK SHIELD VALVE
	NEEDLE VALVE
	CIRCUIT SETTER (BALANCING VALVE)
	AUTOMATIC FLOW LIMITING VALVE
	TAMPER VALVE
	FLOAT VALVE
	TRIPLE DUTY VALVE
	COCK, DRAIN
	COCK, SHUT-OFF
	CURB VALVE
	SAFETY RELIEF VALVE
	BACKFLOW PREVENTER
	HOSE END DRAIN
	STRAINER Y-TYPE
	AIR VENT, AUTOMATIC
	AIR VENT, MANUAL
VB	VACUUM BREAKER
	FLEXIBLE CONNECTION (BRAIDED HOSE)
	FLEXIBLE CONNECTION (SPHERICAL RUBBER)
T	THERMOSTATIC RADIATOR
	THERMOWELL
M	FLOW METER
	TEST POINT
	PRESSURE GAUGE
	THERMOMETER
	STEAM TRAP
FS	FLOW OR PRESSURE SWITCH
	PUMP
	FLOW INDICATOR

ABBREVIATIONS

SYMBOL	DESCRIPTION
°F	DEGREE FARENHEIT
Ø	DIAMETER OR PHASE
AAV	AUTOMATIC AIR VENT
AD	ACCESS DOOR
AFF	ABOVE FINISHED FLOOR
AHU	AIR HANDLING UNIT
AP	ACCESS PANEL
AS	AIR SEPARATOR
B	BOILER
BAS	BUILDING AUTOMATION SYSTEM
BDD	BACKDRAFT DAMPER
BHP	BRAKE HORSEPOWER
BTUH	BTU PER HOUR
CC	COOLING COIL
CD	CEILING DIFFUSER
CFM	CUBIC FEET PER MINUTE
CFP	CHEMICAL FEED PUMP
CG	CEILING GRILL
CH	CHILLER
CHW	CHILLED WATER
CHWR	CHILLED WATER RETURN
CHWS	CHILLED WATER SUPPLY
CLG	CEILING
CO	CARBON MONOXIDE
CO2	CARBON DIOXIDE
COND	CONDENSATE
CONDR	CONDENSOR
CONN	CONNECTION
COP	COEFFICIENT OF PERFORMANCE
CPF	CHEMICAL POT FEEDER
CU FT	CUBIC FEET
CU IN	CUBIC INCHES
DB	DRY BULB
DC	DRY AIR COOLER
DDC	DIRECT DIGITAL CONTROL
DEGF	DEGREE FAHRENHEIT
DEMO	DEMOLITION
DET	DETAIL
DG	DOOR GRILLE
DH	DOMESTIC WATER HEATER
DHW	DOMESTIC HOT WATER
DIA	DIAMETER
DIM	DIMENSION
DLV	DOOR LOUVER
DMPR	DAMPER
DP	DEWPOINT
DPS	DIFFERENTIAL PRESSURE SENSOR
DR	DRAIN
DS	DISCONNECT SWITCH
DT	DRAW THROUGH
DW	DOMESTIC WATER
DWG	DRAWING
(E)	EXISTING
EA	EXHAUST AIR
EA	EACH
EAD	EXHAUST AIR DAMPER
EAT	ENTERING AIR TEMPERATURE
ED	EXHAUST DIFFUSER
EDB	ENTERING DRY BULB TEMPERATURE
EER	ENERGY EFFICIENCY RATIO
EF	EXHAUST FAN
EFF	EFFICIENCY
EG	EXHAUST GRILLE
EJ	EXPANSION JOINT
ELEC	ELECTRICAL
ENT	ENTERING
EQ	EQUAL
ER	EXHAUST REGISTER
ESP	EXTERNAL STATIC PRESSURE
ET	EXPANSION TANK
EWBT	ENTERING WET BULB TEMPERATURE
EWT	ENTERING WATER TEMPERATURE
EXP	EXPANSION
EXT	EXTERIOR
F	FAN
F/O	FLAT OVAL
FA	FROM ABOVE
FAI	FRESH AIR INTAKE
FB	FROM BELOW
FCU	FAN COIL UNIT
FCV	FLOW CONTROL VALVE
FD	FIRE DAMPER
FDR	FLOOR DRAIN
FF	FINAL FILTER
FLA	FULL LOAD AMP
FMD	FLOW MEASURING DEVICE
FPM	FEET PER MINUTE
FPT	FAN POWERED TERMINAL
FSD	COMBINATION FIRE/SMOKE DAMPER
FSS	FLOW SENSING SWITCH
FT	FEET
GA	GAUGE
GAL	GALLON
GALV	GALVANIZED
GPM	GALLON PER MINUTE
GRL	GRILLE

ABBREVIATIONS

SYMBOL	DESCRIPTION
GSNK	GOOSENECK
H	HUMIDITY
HC	HEATING COIL
HFD	HORIZONTAL FIRE DAMPER
HHW	HEATING HOT WATER
HHWR	HEATING HOT WATER RETURN
HHWS	HEATING HOT WATER SUPPLY
HORIZ	HORIZONTAL
HP	HORSEPOWER
HTG	HEATING
HZ	HERTZ
IN	INCHES
KW	KILOWATT
(L1)	1 ACOUSTICAL DUCT LINING
(L2)	2 ACOUSTICAL DUCT LINING
L	LINED DUCTWORK
LAT	LEAVING AIR TEMPERATURE
LB	POUND
LD	LINEAR DIFFUSER
LDB	LEAVING DRY BULB TEMPERATURE
LWBT	LEAVING WET BULB TEMPERATURE
LWT	LEAVING WATER TEMPERATURE
MAT	MIXED AIR TEMPERATURE
MAX	MAXIMUM
MBH	THOUSAND BTUH
MBTU	THOUSAND BTU
MCA	MINIMUM CIRCUIT AMPACITY
MCC	MOTORIZED CONTROL CENTER
MD	MOTORIZED DAMPER
MECH	MECHANICAL
MEZZ	MEZZANINE
MIN	MINIMUM
MISC	MISCELLANEOUS
MV	MANUAL VENT
(N)	NEW
NA	NOT APPLICABLE
NC	NORMALLY CLOSED
NFA	NET FREE AREA
NO	NORMALLY OPEN
NTS	NOT TO SCALE
OA	OUTSIDE AIR
OAD	OUTSIDE AIR DAMPER
OBD	OPPOSED BLADE DAMPER
OC	ON CENTER
OD	OUTSIDE DIAMETER
OPNG	OPENING
P	PUMP
PD	PRESSURE DROP
PERF	PERFORATED
PF	PRE-FILTER
PG	PRESSURE GAUGE
PH	PHASE
POC	POINT OF CONNECTION
PRV	PRESSURE REDUCING VALVE
PSI	POUNDS PER SQUARE INCH
PSIA	POUNDS PER SQUARE INCH (ABS)
PSIG	POUNDS PER SQUARE INCH (GAUGE)
RA	RETURN AIR
RAD	RETURN AIR DAMPER
RD	RETURN DIFFUSER
REF	REFRIGERANT
RG	RETURN GRILL
RH	RELATIVE HUMIDITY
RHG	REFRIGERANT HOT GAS
RL	REFRIGERANT LIQUID LINE
RPM	REVOLUTIONS PER MINUTE
RR	RETURN REGISTER
SA	SUPPLY AIR
SD	SMOKE DAMPER
SEER	SEASONAL ENERGY EFFICIENCY RATIO
SF	SUPPLY FAN
SG	SUPPLY GRILLE
SP	STATIC PRESSURE
SQ FT	SQUARE FEET
SR	SUPPLY REGISTER
SS	STAINLESS STEEL
STRUCT	STRUCTURAL
T	TEMPERATURE
TA	TRANSFER AIR
TA	TO LEVEL ABOVE
TB	TO LEVEL BELOW
TG	TRANSFER GRILLE
TYP	TYPICAL
VAV	VARIABLE AIR VOLUME
VD	VOLUME DAMPER
VFD	VARIABLE FREQUENCY DRIVE/CONTROLLER
W/O	WITHOUT
WB	WET BULB
WC	WATER COLUMN
WG	WALL GRILLE
WMS	WIRE MESH SCREEN
WT	WEIGHT

MECHANICAL DRAWING LIST

DWG NO.	DRAWING TITLE
M000	MECHANICAL NOTES, SYMBOLS, & ABBREVIATIONS
M010	MECHANICAL SCHEDULES
M011	MECHANICAL SCHEDULES
M201	MECHANICAL GROUND FLOOR PLAN - OVERALL
M201A	MECHANICAL LEARNING CENTER GROUND FLOOR PLAN - SOUTH
M201B	MECHANICAL LEARNING CENTER GROUND FLOOR PLAN - NORTH
M201C	MECHANICAL BOXCAR GROUND FLOOR PLAN
M202	MECHANICAL MEZZANINE FLOOR PLAN - OVERALL
M202A	MECHANICAL LEARNING CENTER MEZZ FLOOR PLAN - SOUTH
M221	MECHANICAL ROOF LEVEL PLAN - OVERALL
M221A	MECHANICAL LEARNING CENTER ROOF LEVEL PLAN - SOUTH
M221B	MECHANICAL LEARNING CENTER ROOF LEVEL PLAN - NORTH
M221C	MECHANICAL BOXCAR ROOF LEVEL PLAN
MP201	MECHANICAL GROUND FLOOR PIPING PLAN
MP202	MECHANICAL MEZZANINE LEVEL PIPING PLAN
MP221	MECHANICAL ROOF LEVEL PIPING PLAN
M401	MECHANICAL ENLARGED PLANS

GENERAL NOTES:

1. THE ENTIRE INSTALLATION SHALL CONFORM TO THE REQUIREMENTS OF THE 2019 CALIFORNIA MECHANICAL CODE WITH CITY OF LOS ANGELES AMENDMENTS, 2019 CALIFORNIA BUILDING CODE WITH CITY OF LOS ANGELES AMENDMENTS, AND OTHER APPLICABLE CODES AND REGULATIONS, INCLUDING 2019 CALIFORNIA ENERGY EFFICIENCY STANDARDS (TITLE 24 , PART 6), AND CAL-GREEN REQUIREMENTS WITH LA CITY AMENDMENTS.
2. EXACT LOCATIONS OF ALL CEILING DIFFUSERS, REGISTERS AND GRILLES ARE DETAILED ON THE ARCHITECTURAL REFLECTIED CEILING PLANS AND ARCHITECTURAL ROOM ELEVATIONS.
3. PADS AND FLASHING FOR MECHANICAL EQUIPMENT SHALL BE AS INDICATED ON THE STRUCTURAL AND ARCHITECTURAL PLANS. COORDINATE EXACT SIZES OF REQUIRED PADS AND OPENINGS WITH EQUIPMENT SUPPLIER. SEE STRUCTURAL DRAWINGS FOR OPENING AND EQUIPMENT PAD REINFORCEMENT DETAILS.
4. PROVIDE SEISMIC ANCHORAGE AND VIBRATION ISOLATION SUPPORT TO ALL EQUIPMENT, DUCTWORK AND PIPING. SUBMIT CALCULATIONS FOR EQUIPMENT SUPPORTS, ANCHORAGE, AND VIBRATION ISOLATORS THAT ARE PREPARED, SIGNED AND STAMPED BY A REGISTERED CALIFORNIA P.E.
5. EQUIPMENT SHALL BE INSTALLED IN STRICT ACCORDANCE WITH THE EQUIPMENT MANUFACTURER'S RECOMMENDATIONS. PROVIDE ALL FITTINGS, TRANSITIONS, DAMPERS, VALVES, AND OTHER DEVICES REQUIRED FOR A COMPLETE WORKABLE INSTALLATION.
6. DUCTWORK SHALL BE CONSTRUCTED, ERECTED, AND TESTED IN ACCORDANCE WITH THE MOST RESTRICTIVE OF LOCAL REGULATIONS, PROCEDURES DETAILED IN THE ASHRAE HANDBOOK OF FUNDAMENTALS, OR THE APPLICABLE STANDARDS ADOPTED BY THE SHEET METAL AND AIR CONDITIONING CONTRACTORS NATIONAL ASSOCIATION (SMACNA). REFER TO SPEC 233100 & 23 05 93 FOR DUCT AIR LEAKAGE TEST REQUIREMENT.
7. EQUIPMENT, DUCTS, PIPING, AND OTHER DEVICES AND MATERIALS INSTALLED OUTSIDE OF THE BUILDING OR OTHERWISE EXPOSED TO THE WEATHER SHALL BE DESIGNED FOR OUTDOOR INSTALLATION AND COMPLETELY WEATHERPROOFED.
8. DUCTWORK SHALL BE INSULATED OR LINED PER SPECIFICATIONS OR AS NOTED ON DRAWINGS. SUPPLY DUCT SIZES ARE CLEAR INTERNAL SIZES FOR THE AIRFLOW. WHEN LINED DUCT IS USED, THE SHEET METAL SIZE SHALL BE INCREASED ACCORDINGLY TO ACCOMODATE STATED LININGTHICKNESS. RETURN/TRANSFER DUCT SIZES INDICATE OUTSIDE DIAMETER SIZES FOR THE AIRFLOW AND INCREASING DUCT SIZE IS NOT NEEDED. DUCT JOINTS AND SEAMS SHALL BE SEALED PER SPECIFICATIONS.
9. MANUAL DAMPERS SHALL BE PROVIDED IN ALL DUCT BRANCHES TO INDIVIDUAL DIFFUSERS, GRILLES, REGISTERS, AND BELLMOUTH CONNECTIONS NO MATTER WHETHER IT IS INDICATED OR NOT.
10. TURNING VANES SHALL BE PROVIDED FOR ALL ELBOWS FOR SUPPLY RETURN AND ALL GENERAL EXHAUST. REFER TO DIVISION 23 SPECIFICATION FOR FULL TURNING VANE AND RADIUS ELBOW REQUIREMENTS.
11. PENETRATIONS OF PIPES, CONDUITS, IN WALLS REQUIRING PROTECTED OPENINGS SHALL BE FIRE STOPPED. FIRE STOP MATERIAL SHALL BE A TESTED ASSEMBLY APPROVED BY THE LOCAL FIRE MARSHAL. REFER TO FIRE LIFE SAFETY DRAWINGS FOR LOCATION AND RATING OF ALL FIRE AND SMOKE RATED WALLS.
12. CONTRACTOR SHALL PROVIDE DETAILED SHOP DRAWINGS OF ALL DUCT ROUTING PRIOR TO INSTALLATION. SHOP DRAWINGS SHALL BE FULLY COORDINATED WITH ALL TRADES AND SHALL BE ISSUED ONLY AFTER ALL TRADES HAVE SIGNED OFF.
13. ALL MECHANICAL COOLING EQUIPMENT LOCATED IN ELECTRICAL ROOMS SHALL NOT BE LOCATED DIRECTLY ABOVE ELECTRICAL EQUIPMENT. MECHANICAL CONTRACTOR SHALL COORDINATE WITH ELECTRICAL DRAWINGS AND CONTRACTOR. ANY PIPING LOCATED WITHIN ELECTRICAL ROOMS SHALL NOT RUN ABOVE ELECTRICAL EQUIPMENT. SHOULD PIPE ROUTING BE REQUIRED OVER EQUIPMENT, COORDINATE WITH ELECTRICAL ENGINEER AND PLACE PIPING ABOVE CONTAINMENT PAN OR PLACED WITHIN DOUBLE WALL PIPING.
14. ALL MATERIALS PASSING THOUGH AIR PLENUMS SHALL BE PLENUM RATED, WITH FLAME SPREAD <25 AND SMOKE DEVELOPED <50 RATINGS.
15. MECHANICAL CONTRACTOR TO COORDINATE WITH GENERAL CONTRACTOR TO ENSURE THAT ACCESS PANELS ARE IN HARD LID CEILINGS FOR ACCESS TO VAV BOXES, VALVES, DAMPERS, AND ALL OTHER EQUIPMENT REQUIRING ACCESS. CONTRACTOR TO COORDINATE ACCESS PANEL LOCATIONS WITH ARCHITECT. PROVIDE YOUNG'S REGULATOR TO VOLUME DAMPERS LOCATED ABOVE INACCESSIBLE CEILINGS.
16. THERMOSTATS AND TEMPERATURE SENSORS SHALL BE PROVIDED FOR ALL VAV BOXES. TEMPERATURE SENSORS SHALL BE PLACED IN ALL COMMON CIRCULATION AREAS SERVED BY VAV BOXES. ADJUSTABLE THERMOSTATS SHALL BE PROVIDED IN PRIVATE OFFICE, CONFERENCE ROOMS, ETC. ADJUSTABLE THERMOSTATS' LOCATION SHALL COMPLY WITH CALIFORNIA ADA CODE AND ARCHITECTS DRAWINGS.
17. ANY PENETRATION OF A RATED ASSEMBLY SHALL BE FIRE STOPPED USING APPROVED MATERIALS AND SHALL HAVE AN F AND T RATING AS DETERMINED BY TESTS CONDUCTED IN ACCORDANCE WITH CBC STANDARD AND APPROVED BY STATE FIRE MARSHALL.
18. PROVIDE PLENUMS AS INDICATED ON PLANS. PLENUMS SHALL BE SIZED TO ACCOMMODATE THE LOUVER, DUCT AND GRILLE CONNECTION TO THE PLENUM. PROVIDE ½" METAL SCREEN ON EXTERIOR LOUVER.
19. PROVIDE FIRE SMOKE DAMPERS AT ALL DUCTS PENETRATING RATED WALLS AND FLOORS. FIRE SMOKE DAMPERS SHALL BE INSTALLED PER MANUFACTURERS INSTALLATION INSTRUCTIONS. INSTALL DUCT MOUNTED SMOKE DETECTOR WITHIN 5 FT OF THE DAMPER WITH NO AIR OUTLETS OR INLETS BETWEEN THE DETECTOR AND THE DAMPER.
20. EACH PIECE OF EQUIPMENT COMPRISING PART OF THE MECHANICAL SYSTEM SHALL BE CHECKED FOR PROPER LUBRICATION, DRIVE ROTATION, BELT TENSION, PROPER CONTROL SEQUENCE AND ANY OTHER CONDITION WHICH MAY CAUSE IMPROPER EQUIPMENT OPERATION, DAMAGE TO EQUIPMENT OR ENDANGER PERSONNEL.
21. PROVIDE AND MAINTAIN ACCESS AND WORKING SPACE AROUND MECHANICAL, ELECTRICAL AND CONTROL EQUIPMENT TO PERMIT READY AND SAFE OPERATION, EXAMINATION AND MAINTENANCE.
22. ALL SPACE CONDITIONING AND VENTILATION SYSTEM SHALL BE BALANCED TO THE QUANTITIES SPECIFIED IN THE PLAN, IN ACCORDANCE WITH THE ASSOCIATION AIR BALANCE COUNCIL (AABC) OR NATIONAL ENVIRONMENTAL BALANCE BUREAU (NEBB) STANDARDS.
23. OUTSIDE AIR SHALL NOT BE TAKEN LESS THAN 10 FEET IN DISTANCE FROM AN APPLIANCE VENT OULET, A VENT OPENING OF A PLUMBING DRAINAGE SYSTEM, OR THE DISCHARGE OUTLET OF AN EXHAUST FAN, NOR LESS THAN 10 FEET ABOVE THE SURFACE OF AN ABUTTING PUBLIC WAY, SIDEWALK, STREET, ALLEY, OR DRIVEWAY.
24. TESTING AND ADJUSTMENT IS REQUIRED FOR ALL NEW INSTALLATION OF ANY OF HEATING VENTILLATION AND AIR CONDITIONING SYSTEM. THE HVAC SYSTEM AND COMPONENTS WILL BE TESTED, ADJUSTED AND BALANCED IN ACCORDANCE WITH THE ASSOCIATED AIR BALANCE COUNCIL NATIONAL STANDARDS FOR TOTAL SYSTEM BALANCE (6TH EDITION). REFER TO SPECIFICATION 23 05 93.
25. A FINAL REPORT FOR THE TESTING AND ADJUSTING OF ALL NEW SYSTEMS SHALL BE COMPLETED PRIOR TO FINAL APPROVAL BY THE FIELD INSPECTOR. THIS REPORT SHALL BE SIGNED BY THE INDIVIDUAL RESPONSIBLE FOR PERFORMING THESE SERVICES.
26. AN OPERATION & SYSTEMS MANUAL, SHALL BE PROVIDED TO THE OWNER OR REPRESENTATIVE AND TO THE FIELD INSPECTOR AT THE TIME OF FINAL INSPECTION.
27. IF THE NEW HVAC SYSTEM IS USED DURING CONSTRUCTION, USE RETURN AIR FILTER WITH A MERV OF 8. REPLACE ALL FILTERS IMMEDIATELY PRIOR TO OCCUPANCY.
28. ALL DUCT AND OTHER RELATED AIR DISTRIBUTION COMPONENT OPENINGS SHALL BE COVERED WITH TAPE, PLASTIC, OR SHEET METAL UNTIL THE FINAL STARTUP OF THE HEATING, COOLING AND VENTILATING EQUIPMENT.
29. AN AIR FILTER WITH A MINIMUM EFFICIENCY REPORTING VALUE (MERV) OF 8 OR HIGHER SHALL BE INSTALLED IN THE MECHANICAL SYSTEM FOR OUTSIDE AND RETURN AIR PRIOR TO OCCUPANCY.
30. MECHANICALLY VENTILATED BUILDINGS WITHIN 1,000 FEET OF A FREEWAY SHALL PROVIDE REGULARLY OCCUPIED AREAS OF THE BUILDING WITH A MERV 13 FILTER FOR OUTSIDE AND RETURN AIR. FILTERS SHALL BE INSTALLED PRIOR TO OCCUPANCY AND RECOMMENDATIONS FOR MAINTENANCE WITH FILTERS OF THE SAME VALUE SHALL BE INCLUDED IN THE OPERATION AND MAINTENACE MANUAL.
31. THE BUILDING SHALL MEET OR EXCEED THE PROVISIONS FOR MECHANICAL VENTILATION OF SECTION 1203 OF LOS ANGELES BUILDING CODE.
32. ADDITIONS TO BUILDINGS THAT USE DEMAND CONTROL VENTILLATION SHALL HAVE CO2 SENSORS AND VENTILATION CONTROLS INSTALLED IN ACCORDANCE WTH THE REQUIREMENTS OF THE CURRENT EDITION OF THE CALIFORNIA ENERGY CODE, CCR, TITLE 24, PART 6, SECTION 121(C).
33. THE USE OF FLEXIBLE DUCT IS LIMITED TO 5' LENGTHS OR LESS PER CODE.
34. SMOKE DUCT TESTING SHOULD BE PERFORMED DURING DUCT AIR LEAKAGE TESTING TO FACILITATE ANY CORRECTION.

NOT FOR CONSTRUCTION

09.AUG.2021

ba
belzberg architects
2321 MAIN STREET
SANTA MONICA, CA 90405
310.453.9611
www.belzbergarchitects.com

ARUP
Arup North America Ltd.
900 Wilshire Boulevard,
19th Floor
Los Angeles CA 90017
Tel: 310 578 4400
www.arup.com

#	DESCRIPTION	DATE

HOLOCAUST MUSEUM LA EXPANSION

100 THE GROVE DRIVE
LOS ANGELES, CA 90036

MECHANICAL NOTES, SYMBOLS, & ABBREVIATIONS

PROJECT NUMBER: 17009

M000

08/09/21 19:12:21

PACKAGE UNIT SCHEDULE

ITEM	MANUFACTURER & MODEL NO.	LOCATION	AREA SERVED	AMBIENT DB°f	OSA CFM	TOTAL CFM	SUPPLY FAN						RETURN FAN							CONDENSER FAN	
							QTY #	TOTAL S.P. IN W.C.	EXT S.P. IN W.C.	TOTAL BHP	TOTAL HP	VFD PER FAN	CFM	QTY #	TOTAL S.P. IN W.C.	EXT S.P. IN W.C.	TOTAL BHP	TOTAL HP	VFD PER FAN	QTY #	HP
PAC-1	ALLIANCE+ SAMSUNG	MECHANICAL YARD	SOUTH BUILDING	110	10,000	18,300	2	4.3	2.0	19.4	30	Y	18,300	2	1.5	1	11.9	15	Y	4	2x25+2x20(4CIRCUITS)
PAC-2	ALLIANCE+SAMSUNG	ROOF OF EXISTING BUIDLING	BOX CAR PAVILION	110	2,400	8,000	1	3.8	2.0	6.7	7.5	Y	8,000	1	1.5	1	3.85	5	Y	2	2x10+2x8(4CIRCUITS)

PACKAGE UNIT SCHEDULE-CONTINUED

ITEM	COOLING COIL-DX												HEATING COIL-DX						HEATING COIL									ELECTRICAL DATA (COMBINED POC)					PRE FILTER			FINAL FILTER				EMERGENCY POWER	NOTES
	CFM	EER	IEER	REFRIGERANT TYPE	COIL PERFORMANCE TOTAL CAP MBH	COIL PERFORMANCE SENS CAP MBH	AIR MAX VEL FPM	AIR ENT DB °F	AIR ENT WB °F	AIR LVG DB °F	AIR LVG WB °F	CFM	COP	REFRIGERANT TYPE	COIL PERFORMANCE TOTAL CAP MBH	AIR MAX VEL FPM	AIR ENT DB °F	AIR LVG DB °F	CFM	COMBINED COIL PERFORMANCE TOTAL CAP MBH	AIR MAX VEL FPM	AIR ENT DB °F	AIR LVG DB °F	AIR ENT TEMP °F	AIR LVG TEMP °F	GPM	VOLT	PH	HZ	MCA	MOCP	MAX. FACE VEL. FPM	MERV RATING	EFF. %	MAX. FACE VEL. FPM	MERV RATING	EFF. %		
PAC-1	18,300	9.50	10.30	R-410a	617.0	606.0	450	82.0	63.0	53	52	-	-	-	-	-	-	-	10,000	162.0	-	40	55	140	100	8	460	3	60	229.2	263	500	MERV 8	35%	450	MERV 14 DPx95 Dual-Stage Carbon Filter	95%	N	1-10
PAC-2	8,000	10.60	11.00	R-410a	192.0	184.0	450	82.0	63.0	53	52	2,400	3.2	R-410a	118.0	450	40	85	-	-	-	-	-	-	-		460	3	60	65.1	83	500	MERV 8	35%	450	MERV 14 DPx95 Dual-Stage Carbon Filter	95%	N	1-9

NOTES:

1. PROVIDE HARD-WIRED SHUTDOWN BY DUCT DETECTOR IN SUPPLY DUCT AND RETURN DUCT THROUGH FIRE ALARM SYSTEM.
2. ADD SEPARATE POC FOR LIGHTS AND RECEPTACLES.
3. UNITS SHALL BE INTERNALLY ISOLATED.
4. PROVIDE UNIT-MOUNTED EXTERIOR SERVICE LIGHT WITH INDEPENDENT SWITCH FOR OUTDOOR UNITS.
5. PROVIDE ACOUSTICAL LOUVER ON INTAKE OPENINGS AND EXHAUST OPENINGS TO EXTERIOR.
6. PROVIDE MINIMUM OUTSIDE AIR DAMPER.
7. PROVIDE MODULATING ECONOMIZER DAMPER.
8. PROVIDE AIRFLOW MEASURING STATIONS ON MINIMUM OUTSIDE AIR INLET TO UNIT.
9. RATED FOR OUTDOOR INSTALLATION.
10. PROVIDE SPERATE DISCONNECT SWITCH FOR PAC AND EACH HP.

PACKAGE UNIT SOUND SCHEDULE

ITEM	SUPPLY/OUTLET SOUND POWER LEVEL (DB RE 10E-12 WATTS)								RETURN/INLET SOUND POWER LEVEL (DB RE 10E-12 WATTS)								OUTDOOR AIR/ INLET SOUND POWER LEVEL (DB RE 10E-12 WATTS)								EXHAUST/OUTLET SOUND POWER LEVEL (DB RE 10E-12 WATTS)								CASING RADIATED SOUND POWER LEVEL (DB RE 10E-12 WATTS)							
	63 Hz	125 Hz	250 Hz	500 Hz	1 kHz	2 kHz	4 kHz	8 kHz	63 Hz	125 Hz	250 Hz	500 Hz	1 kHz	2 kHz	4 kHz	8 kHz	63 Hz	125 Hz	250 Hz	500 Hz	1 kHz	2 kHz	4 kHz	8 kHz	63 Hz	125 Hz	250 Hz	500 Hz	1 kHz	2 kHz	4 kHz	8 kHz	63 Hz	125 Hz	250 Hz	500 Hz	1 kHz	2 kHz	4 kHz	8 kHz
PAC-1	86	84	93	91	86	83	79	72	82	85	88	83	76	74	71	64	85	83	91	88	78	75	73	67	82	83	86	84	79	76	74	69	79	73	70	64	55	48	44	36
PAC-2	82	80	82	85	81	80	79	74	76	75	76	79	67	68	69	65	76	75	76	79	67	68	69	65	-	-	-	-	-	-	-	-	74	68	57	55	47	42	41	36

EXHAUST FAN SCHEDULE

ITEM	MANUFACTURER & MODEL NO.	LOCATION	AREA SERVED	TYPE	NORMAL CFM	E.S.P. IN W.G.	FRPM	MOTOR DATA BHP	HP	VOLT	PH	HZ	VFD	VIBRATION ISOLATION MOUNT TYPE	MIN. STATIC DEFL. IN	SOUND DATA CASE RADIATED SOUND POWER LEVEL, dB re 10E-12 Watts 63 Hz	125 Hz	250 Hz	500 Hz	1 kHz	2 kHz	4 kHz	8 kHz	SOUND DATA INLET SOUND POWER LEVEL, dB re 10E-12 Watts 63 Hz	125 Hz	250 Hz	500 Hz	1 kHz	2 kHz	4 kHz	8 kHz	OPERATING WEIGHT LBS	EMERGENCY POWER	NOTES
EF-01	GREENHECK, SQ-98-VG	CLASSROOM A	CLASSROOM A	INLINE	520	1.00	1,981	0.32	0.75	208	1	60	N	SH	1	80	88	72	77	66	59	59	63	79	86	78	83	71	65	65	63	60	NO	1
EF-02	GREENHECK, SQ-98-VG	CLASSROOM A	GRN	INLINE	310	0.60	1,397	0.11	0.25	208	1	60	N	SH	1	80	83	63	61	54	49	46	43	79	81	69	67	59	55	52	47	50	NO	1
EF-03	GREENHECK, SQ-130HP-VG	M RESTROOM	RESTROOMS	INLINE	1,170	1.00	1,509	0.39	1.00	208	1	60	N	SH	1	89	75	73	66	60	49	46	43	86	74	77	72	68	64	64	59	100	NO	1

NOTES:

1. PROVIDE WITH BACKDRAFT DAMPER

BOILER SCHEDULE

ITEM	MANUFACTURER & MODEL NO.	LOCATION	FUEL TYPE	INPUT MBW	MAX. OUTPUT MBH	MIN. EFF. %	MAX. NOX. EMISS. PPM	MIN GPM	DESIGN GPM	ENT TEMP °F	LVG TEMP °F	PRESSURE DROP FT HD	ELECTRICAL DATA FLA	VOLT	PH	HZ	OPERATING WEIGHT LBS	EMERGENCY POWER	NOTES
B-01	AERCO BMK 750	BOILER SKID	NATURAL GAS	750	720	95.6%	9	12	40	100	140	7.0	13	120	1	60	803	NO	1-3

NOTES:

1. SELECT UNIT FOR LOW NOX AND LOW CO TO COMPLY WITH MOST CURRENT SCAQMD RULES. BOILER TO BE SOURCE TESTED BY THIRD PARTY.
2. PROVIDE CONDENSATE NEUTRALIZATION KIT INCLUDING MULTIPLE BOILER CONDENSATE TRAP, PH NEUTRALIZATION KIT, AND NEUTRALIZING MEDIA.
3. PROVIDE GAS PRESSURE REGULATOR AND TRAIN.

PUMP SCHEDULE

ITEM	MANUFACTURER & MODEL NO.	LOCATION	SERVED	TYPE	DESIGN FLOW GPM	MIN FLOW GPM	TOTAL HEAD FT WG.	PUMP RPM	DUTY PT EFFIC %	NPSHR FT WG.	MOTOR DATA DUTY PT BHP	HP	VOLT	PH	HZ	VIBRATION ISOLATION MOUNT TYPE	MIN. STATIC DEFL. IN	BASE TYPE	VFD	OPERATING WEIGHT LBS	EMERGENCY POWER	NOTES
P-1	GRUNDFOS LCS 15951	BOILER SKID	HEATING HOT WATER	SPLIT COUPLED END SUCTION PUMP	40		70	1765	48%	3	1.5	3.0	208	3	60	MSL	1	CIB	YES	206	NO	-

CHEMICAL POT FEEDER SCHEDULE

ITEM	MANUFACTURER & MODEL NO.	LOCATION	SERVICE	CAPACITY GALLONS	OPERATING WEIGHT LBS	NOTES
CPF-01	AMERICAN WHEATLEY BFT-002-O	BOILER SKID	HEATING HOT WATER	2	35	-

NOT FOR CONSTRUCTION

09.AUG.2021

belzberg architects
2321 MAIN STREET
SANTA MONICA, CA 90405
310.453.9611
www.belzbergarchitects.com

ARUP
Arup North America Ltd.
900 Wilshire Boulevard,
19th Floor
Los Angeles CA 90017
Tel: 310 578 4400
www.arup.com

#	DESCRIPTION	DATE

HOLOCAUST MUSEUM LA EXPANSION

100 THE GROVE DRIVE
LOS ANGELES, CA 90036

MECHANICAL SCHEDULES

PROJECT NUMBER: 17009

M010

09/09/21 19:12:23

FAN COIL UNIT SCHEDULE (INDOOR UNIT)

ITEM	MANUFACTURER & MODEL NO	ASSOCIATED OUTDOOR UNIT	LOCATION	AREA SERVED	TYPE	SUPPLY CFM	EXT S.P. IN W.C.	COOLING					ELECTRICAL DATA					FILTERS	VIBRATION ISOLATION		SOUND DATA								OPERATING WEIGHT LBS	EMERGENCY POWER	NOTES
								TOTAL CAP MBH	SENS CAP MBH	AIR ENT DB °F	AIR ENT WB °F	AIR LVG DB °F	AIR LVG WB °F	VOLT	PH	HZ	MCA	MOCP	MERV RATING	MOUNT TYPE	MIN STATIC DEFL. IN	SUPPLY/OUTLET SOUND POWER LEVEL, dB re 10E-12 Watts 63 Hz	125 Hz	250 Hz	500 Hz	1 kHz	2 kHz	4 kHz	8 kHz			
FCU 01	FXMQ72MVJU	CU 01	PROJECTOR CONTROL ROOM	PROJECTOR CONTROL ROOM	MED STATIC DUCTED	2050	0.5	52.3	49.6	78	67	55	53	208	1	60	9.0	15.0	13	HS	1	73	68	64	60	57	51	46	40	310	NO	2
FCU 02	FXMQ36PBVJU	CU 02	ELECTRICAL 137	ELECTRICAL 137	MED STATIC DUCTED	1130	0.5	25.9	25.2	78	67	55	53	208	1	60	2.9	15.0	13	HS	1	64	62	58	55	57	50	46	40	105	NO	2
FCU 03	FXMQ36PBVJU	CU 02	IT EQUIPMENT ROOM	IT EQUIPMENT ROOM	MED STATIC DUCTED	1130	0.5	36	27	78	67	55	53	208	1	60	2.9	15.0	13	HS	1	64	62	58	55	57	50	46	40	105	NO	1
FCU 04	FXMQ18PBVJU	CU 03	RECEPTION	RECEPTION	CASSETTE	750	0.5	17.5	15.6	78	67	55	53	208	1	60	0.6	15.0	13	HS	1	68	68	61	54	56	50	46	40	55	NO	1
FCU 05	FXFQ36TVJU	CU 03	SECURITY	SECURITY	CASSETTE	1165	-	36	27.6	78	67	55	53	208	1	60	1.5	15.0	13	HS	1	67	69	63	59	61	55	52	48	60	NO	1
FCU 06	FXFQ36TVJU	CU 03	SECURITY	SECURITY	CASSETTE	1165	-	36	27.6	78	67	55	53	208	1	60	1.5	15.0	13	HS	1	67	69	63	59	61	55	52	48	60	NO	1
FCU 07	FXFQ36TVJU	CU 03	SECURITY	SECURITY	CASSETTE	1165	-	36	27.6	78	67	55	53	208	1	60	1.5	15.0	13	HS	1	67	69	63	59	61	55	52	48	60	NO	1

NOTES:

1. PROVIDE WITH CONDENSATE PUMP.
2. PROVIDE WITH SECONDARY DRAIN PAN.

CONDENSING UNIT SCHEDULE (OUTDOOR UNIT)

ITEM	MANUFACTURER & MODEL NO	ASSOCIATED FCU	LOCATION	AREA SERVED	REFRIGERANT TYPE	COOLING DATA CAP MBH	COOLING DATA AMBIENT OUTDOOR TEMP DB °F	HEATING DATA CAP MBH	HEATING DATA AMBIENT OUTDOOR TEMP DB °F	ELECTRICAL VOLT	PH	HZ	MOCP	MCA	DIMENSIONS WIDTH IN	DIMENSIONS HEIGHT IN	DIMENSIONS DEPTH IN	VIBRATION ISOLATION MOUNT TYPE	VIBRATION ISOLATION MIN STATIC DEFL. IN	OPERATING WEIGHT LBS	EMERGENCY POWER	NOTES
CU-1	RXYQ72XAYDA	FCU 01	ROOF	PROJECTOR ROOM	R410A	71.6	110	68.5	32	208	3	60	20	12.3	36.7	66.7	30.2	MSL	1	455	NO	-
CU-2	RXYQ72XAYDA	FCU 02 TO FCU 03	ROOF	EQPM	R410A	71.6	110	68.5	32	208	3	60	20	12.3	36.7	66.7	30.2	MSL	1	455	NO	-
CU-3	REYQ120XAYDA	FCU 04 to FCU 07	ROOF	SECURITY	R410A	125.5	110	110	32	208	3	60	25	21.1	48.9	66.7	30.2	MSL	1	730	NO	-

VAV UNIT SCHEDULE

TAG	MANUFACTURER & MODEL NO.	LOCATION	AREA SERVED	ASSOCIATED AIR HANDLER	INLET SIZE IN	AIRFLOW MAX CFM	AIRFLOW MIN CFM	AIRFLOW HEATING CFM	HEATING COIL ROWS	HEATING COIL CAP MBH	HEATING COIL ENT AIR TEMP °F	HEATING COIL LVG AIR TEMP °F	HEATING COIL ENT WATER TEMP °F	HEATING COIL WATER TEMP °F	HEATING COIL GPM	PRESSURE DROP AIR IN W.C.	PRESSURE DROP WATER FT W.C.	SUPPLY/OUTLET SOUND POWER LEVEL, dB re 10E-10 Watts 125 Hz	250 Hz	500 Hz	1 kHz	2 kHz	4 kHz	CASING RADIATED SOUND POWER LEVEL, dB re 10E-10 Watts 125 Hz	250 Hz	500 Hz	1 kHz	2 kHz	4 kHz	OPERATING WEIGHT LBS	NOTES
VAV-01	TITUS DESV	CORRIDOR	CORRIDOR	PAC-1	06	330	100	100	2	3.24	55	85	140	100	0.14	0.59	0.01	70	64	55	49	42	39	56	50	40	35	30	25	20	-
VAV-02	TITUS DESV	CLASSROOM A	AUDITORIUM	PAC-1	16	1700	1500	1500	2	48.6	55	85	140	100	2.83	0.51	0.92	61	53	51	50	48	44	49	45	40	33	30	26	56	-
VAV-03	TITUS DESV	CLASSROOM A	AUDITORIUM	PAC-1	16	1700	1500	1500	2	48.6	55	85	140	100	2.83	0.51	0.92	61	53	51	50	48	44	49	45	40	33	30	26	56	-
VAV-04	TITUS DESV	CORRIDOR	CORRIDOR	PAC-1	08	500	170	170	2	5.508	55	85	140	100	0.25	0.51	0.01	67	58	49	47	43	38	52	44	35	31	26	21	24	-
CAV-05	TITUS DESV	CLASSROOM A	GRN RM	PAC-1	06	300	300	300	2	9.72	55	85	140	100	0.60	0.61	0.06	69	62	54	48	42	39	55	49	39	34	30	25	20	-
VAV-06	TITUS DESV	CLASSROOM A	CLASSROOM A	PAC-1	14	1500	1080	1080	2	34.992	55	85	140	100	1.92	0.47	0.43	62	54	52	48	47	43	51	44	38	32	27	27	48	-
VAV-07	TITUS DESV	CLASSROOM B	CLASSROOM B	PAC-1	10	700	500	500	2	16.2	55	85	140	100	0.90	0.52	0.21	64	57	47	46	44	40	52	44	37	29	23	23	30	-
VAV-08	TITUS DESV	CLASSROOM A	GALLERY	PAC-1	14	1900	680	680	2	22.032	55	85	140	100	1.02	0.34	0.14	61	52	53	48	46	42	51	44	39	32	28	28	48	-
VAV-09	TITUS DESV	CLASSROOM A	GALLERY	PAC-1	14	1900	680	680	2	22.032	55	85	140	100	1.02	0.34	0.14	61	52	53	48	46	42	51	44	39	32	28	28	48	-
VAV-10	TITUS DESV	CLASSROOM A	GALLERY	PAC-1	14	1900	680	680	2	22.032	55	85	140	100	1.02	0.34	0.14	61	52	53	48	46	42	51	44	39	32	28	28	48	-
VAV-11	TITUS DESV	OFFICE	OFFICE	PAC-1	06	120	65	65	2	2.106	55	85	140	100	0.08	0.72	0.00	58	50	42	38	36	35	45	38	28	25	24	23	20	-
VAV-12	TITUS DESV	CLASSROOM B	DIT	PAC-1	16	2200	900	900	2	29.16	55	85	140	100	1.37	0.39	0.25	61	53	52	50	47	43	50	45	40	35	32	28	56	-
CAV-13	TITUS DESV	RESTROOM (W)	RESTROOM	PAC-1	14	1210	1210	1210	2	39.204	55	85	140	100	2.29	0.55	0.59	61	54	50	48	46	43	50	44	37	30	26	26	48	-
VAV-14	TITUS DESV	GIFT SHOP	GIFT SHOP	PAC-1	14	1400	600	600	2	19.44	55	85	140	100	0.87	0.51	0.11	62	54	52	48	47	43	51	44	38	31	27	27	48	-
VAV-15	TITUS DESV	GIFT SHOP	GIFT SHOP	PAC-1	14	1400	600	600	2	19.44	55	85	140	100	0.87	0.51	0.11	62	54	52	48	47	43	51	44	38	31	27	27	48	-

DUCT SILENCER SCHEDULE

ITEM	UNIT SERVED	TYPE & MODEL	SYSTEM TYPE	DIMENSIONS LENGTH FT	DIMENSIONS WIDTH IN	DIMENSIONS HEIGHT IN	CFM	PRESSURE DROP IN W.C.	MINIMUM INSERTION LOSS IN Hz 63 Hz	125 Hz	250 Hz	500 Hz	1 kHz	2 kHz	4 kHz	8 kHz	OPERATING WEIGHT LBS	NOTES
DS-1	PAC-1	VIBRO ACOUSTICS RD-MV-F8	RETURN	3	28	24	3,400	0.27	7	11	17	18	21	15	15	13	70	1,2,3

GENERAL NOTES:

1. DUCT SILENCER CONSTRUCTION MUST BE STAINLESS STEEL IF ATTACHED TO STAINLESS STEEL DUCTWORK.
2. ALL DUCT SILENCERS SHALL HAVE ENCAPSULATED FILL.
3. PROVIDE 3 FT OF STRAIGHT DUCT RUN UPSTREAM AND DOWNSTREAM OF DUCT SILENCERS.

NOT FOR CONSTRUCTION

09.AUG.2021

belzberg architects
2321 MAIN STREET
SANTA MONICA, CA 90405
310.453.9611
www.belzbergarchitects.com

ARUP
Arup North America Ltd.
900 Wilshire Boulevard,
19th Floor
Los Angeles CA 90017
Tel: 310 578 4400
www.arup.com

#	DESCRIPTION	DATE

HOLOCAUST MUSEUM LA EXPANSION

100 THE GROVE DRIVE
LOS ANGELES, CA 90036

MECHANICAL SCHEDULES

PROJECT NUMBER: 17009

M011

08/09/21 19:12:27

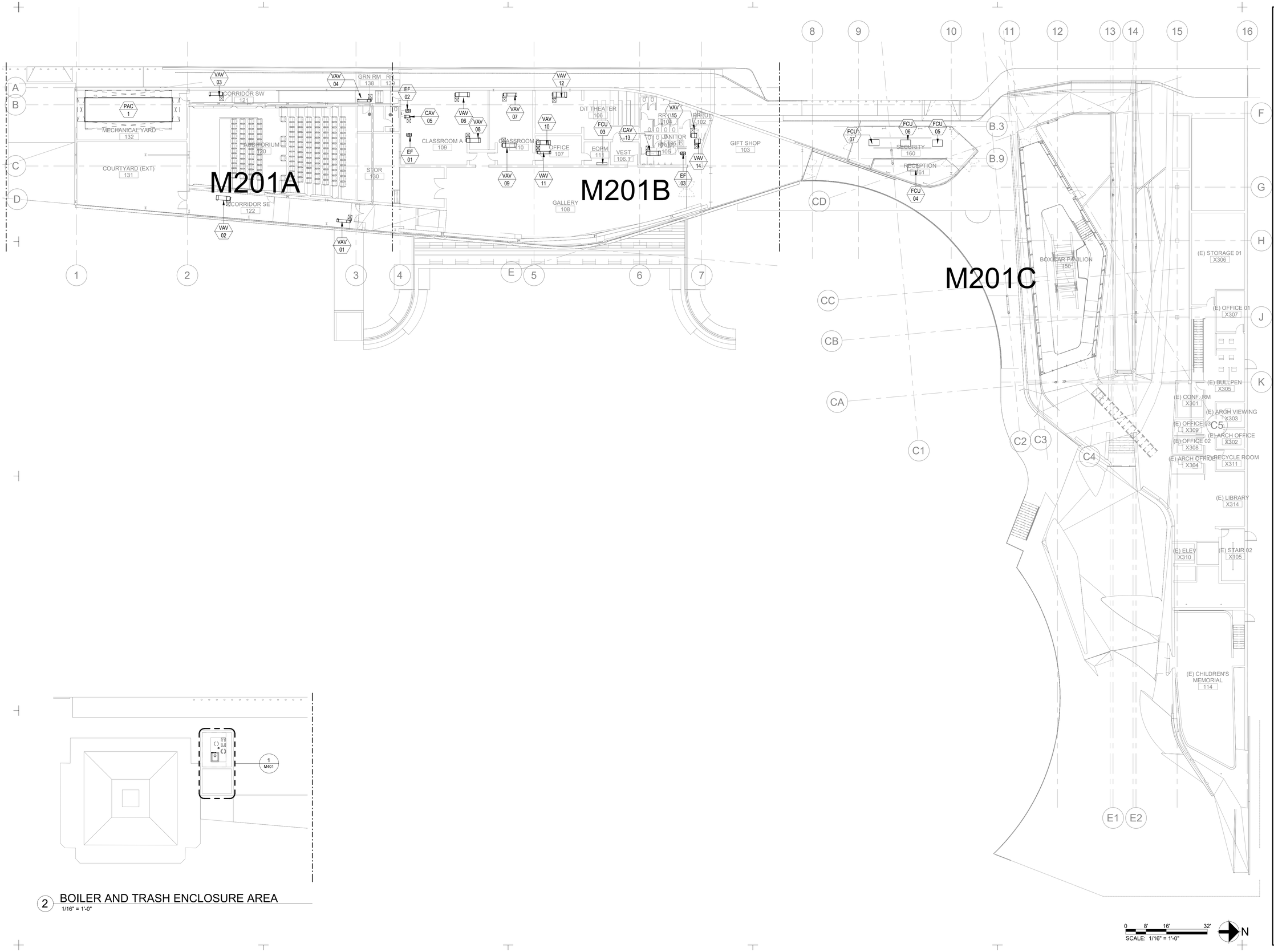

2 BOILER AND TRASH ENCLOSURE AREA
1/16" = 1'-0"

0 8' 16' 32'
SCALE: 1/16" = 1'-0"
N

NOT FOR CONSTRUCTION

09.AUG.2021

ba
belzberg architects
2321 MAIN STREET
SANTA MONICA, CA 90405
310.453.9611
www.belzbergarchitects.com

ARUP
Arup North America Ltd.
900 Wilshire Boulevard,
19th Floor
Los Angeles CA 90017
Tel: 310 578 4400
www.arup.com

#	DESCRIPTION	DATE

HOLOCAUST MUSEUM LA EXPANSION

100 THE GROVE DRIVE
LOS ANGELES, CA 90036

MECHANICAL GROUND FLOOR PLAN - OVERALL

PROJECT NUMBER: 17009

M201

08/09/21 19:12:37

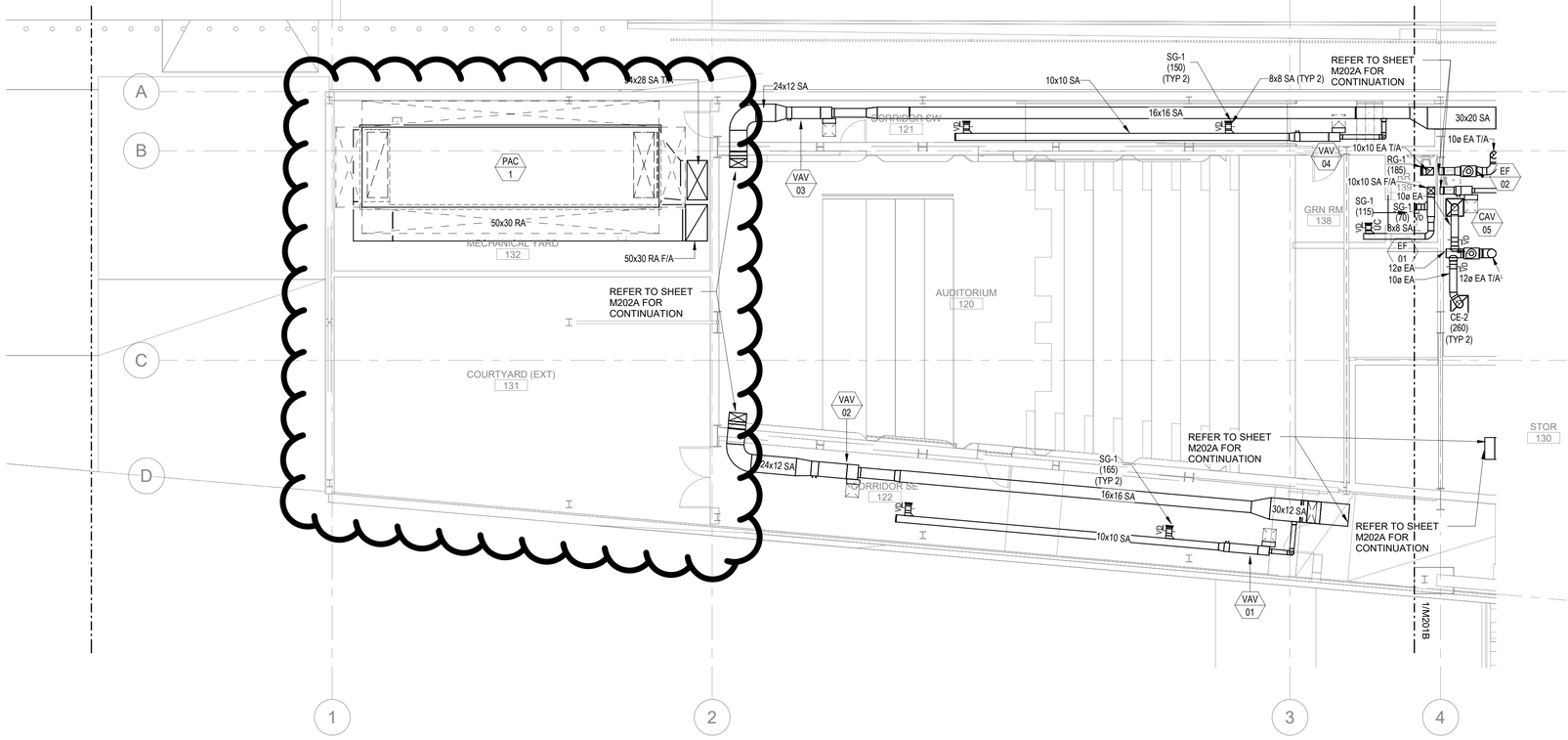

0 4' 8' 16'
SCALE: 1/8" = 1'-0"

N

NOT FOR CONSTRUCTION

09.AUG.2021

belzberg architects
2321 MAIN STREET
SANTA MONICA, CA 90405
310.453.9611
www.belzbergarchitects.com

ARUP
Arup North America Ltd.
900 Wilshire Boulevard,
19th Floor
Los Angeles CA 90017
Tel: 310 578 4400
www.arup.com

#	DESCRIPTION	DATE

HOLOCAUST MUSEUM LA EXPANSION

100 THE GROVE DRIVE
LOS ANGELES, CA 90036

MECHANICAL
LEARNING CENTER
GROUND FLOOR PLAN
- SOUTH

PROJECT NUMBER: 17009

M201A

08/09/21 19:12:43

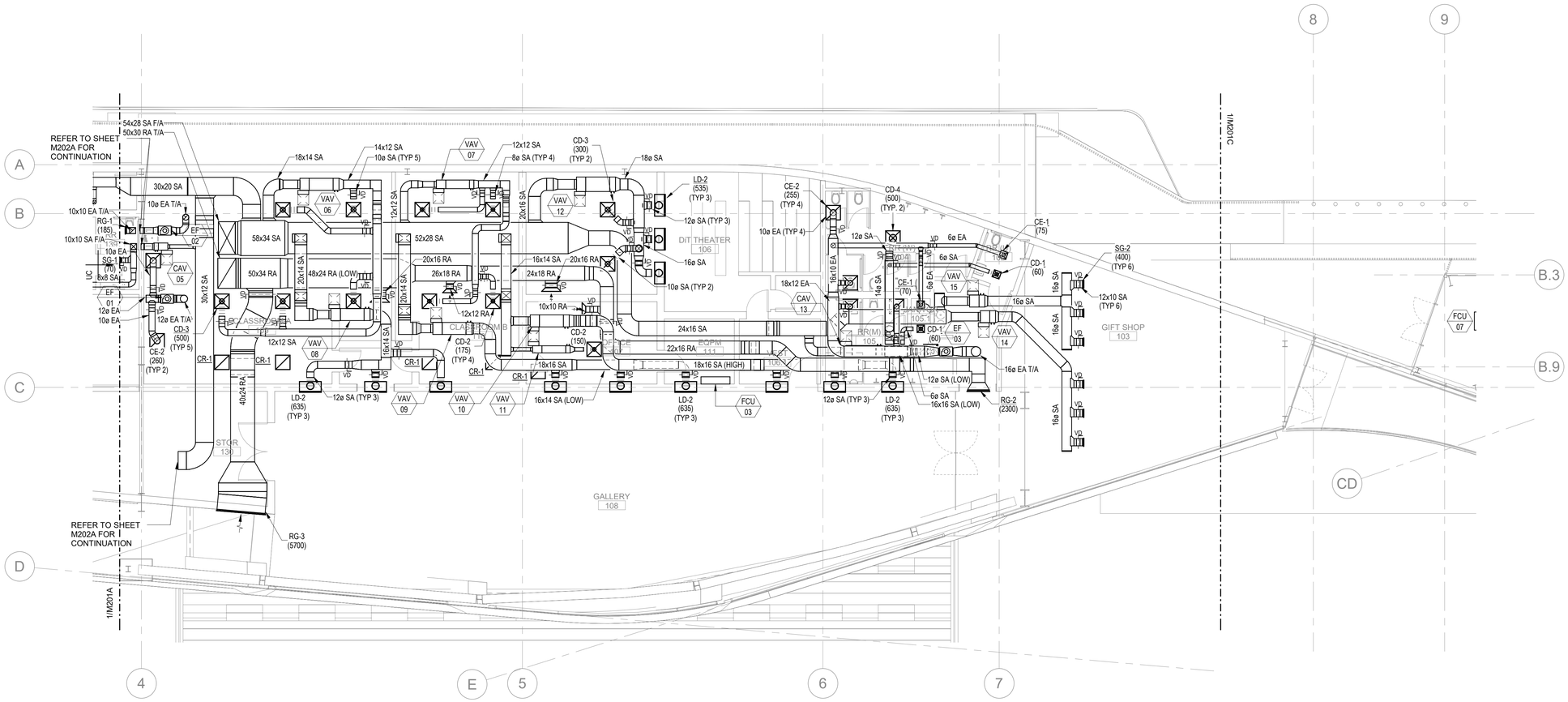

0 4' 8' 16'

SCALE: 1/8" = 1'-0"

N

NOT FOR CONSTRUCTION

09.AUG.2021

belzberg architects

2321 MAIN STREET
SANTA MONICA, CA 90405
310.453.9611

www.belzbergarchitects.com

ARUP

Arup North America Ltd.
900 Wilshire Boulevard,
19th Floor
Los Angeles CA 90017
Tel: 310 578 4400
www.arup.com

#	DESCRIPTION	DATE

HOLOCAUST MUSEUM LA EXPANSION

100 THE GROVE DRIVE
LOS ANGELES, CA 90036

MECHANICAL
LEARNING CENTER
GROUND FLOOR PLAN
- NORTH

PROJECT NUMBER: 17009

M201B

08/09/21 19:12:32

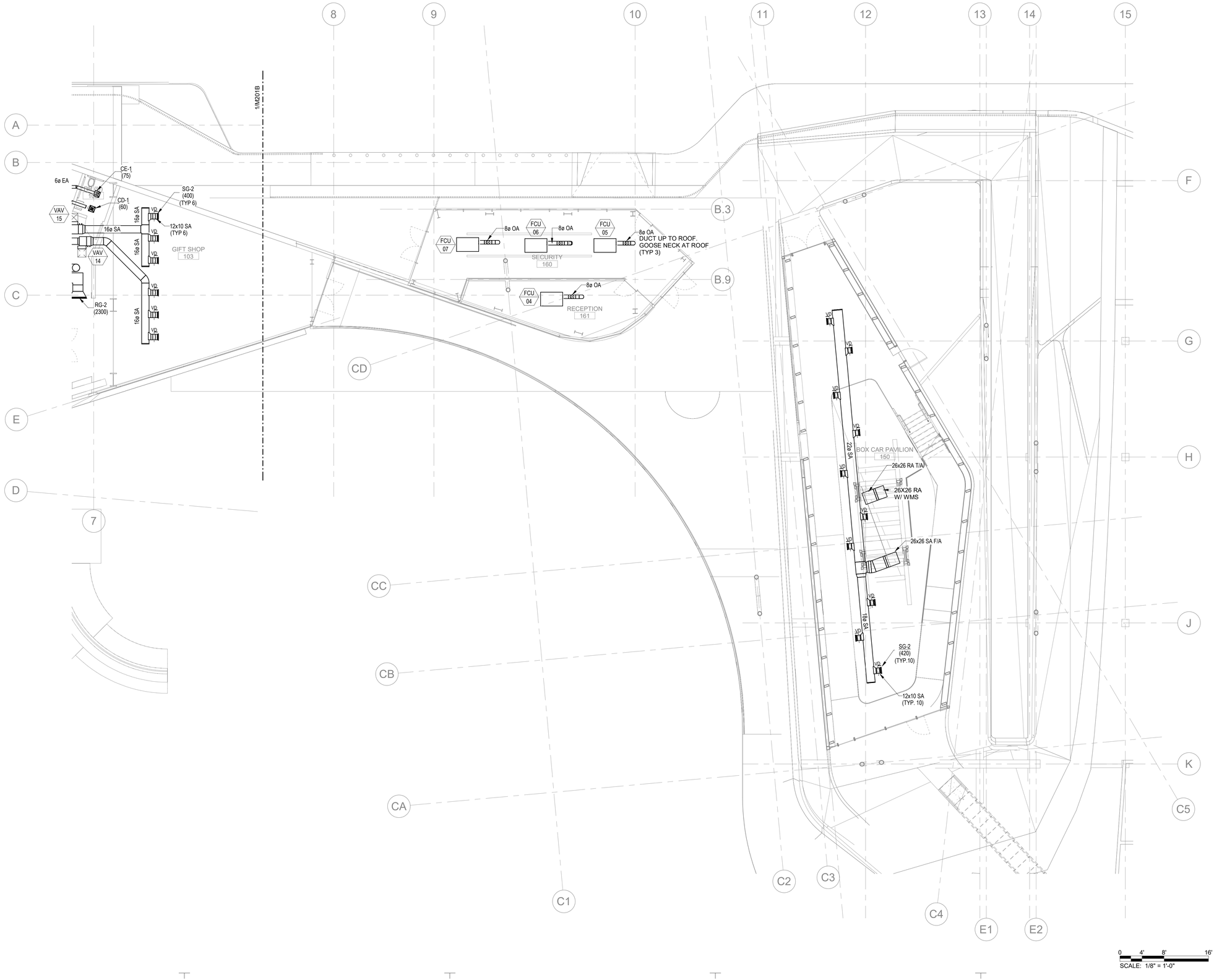

0 4' 8' 16'
SCALE: 1/8" = 1'-0"

N

NOT FOR CONSTRUCTION

09.AUG.2021

ba
belzberg architects
2321 MAIN STREET
SANTA MONICA, CA 90405
310.453.9611
www.belzbergarchitects.com

ARUP
Arup North America Ltd.
900 Wilshire Boulevard,
19th Floor
Los Angeles CA 90017
Tel: 310 578 4400
www.arup.com

#	DESCRIPTION	DATE

HOLOCAUST
MUSEUM LA
EXPANSION

100 THE GROVE DRIVE
LOS ANGELES, CA 90036

MECHANICAL BOXCAR
GROUND FLOOR PLAN

PROJECT NUMBER: 17009

M201C

08/09/21 19:13:01

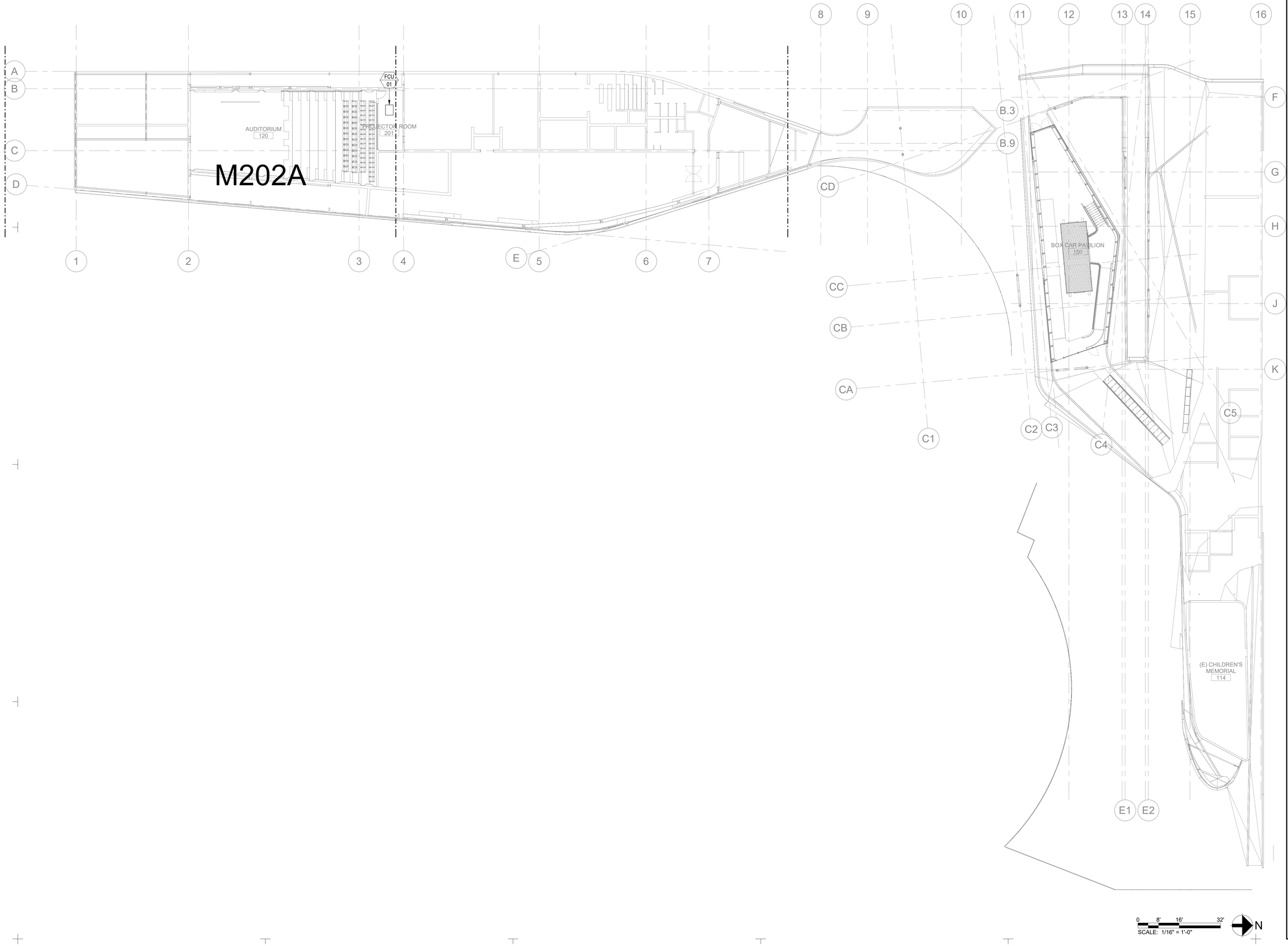

0 8' 16' 32'
SCALE: 1/16" = 1'-0"

N

NOT FOR CONSTRUCTION

09.AUG.2021

belzberg architects
2321 MAIN STREET
SANTA MONICA, CA 90405
310.453.9611
www.belzbergarchitects.com

ARUP
Arup North America Ltd.
900 Wilshire Boulevard,
19th Floor
Los Angeles CA 90017
Tel: 310 578 4400
www.arup.com

#	DESCRIPTION	DATE

HOLOCAUST
MUSEUM LA
EXPANSION

100 THE GROVE DRIVE
LOS ANGELES, CA 90036

MECHANICAL
MEZZANINE FLOOR
PLAN - OVERALL

PROJECT NUMBER: 17009

M202

08/09/21 19:13:08

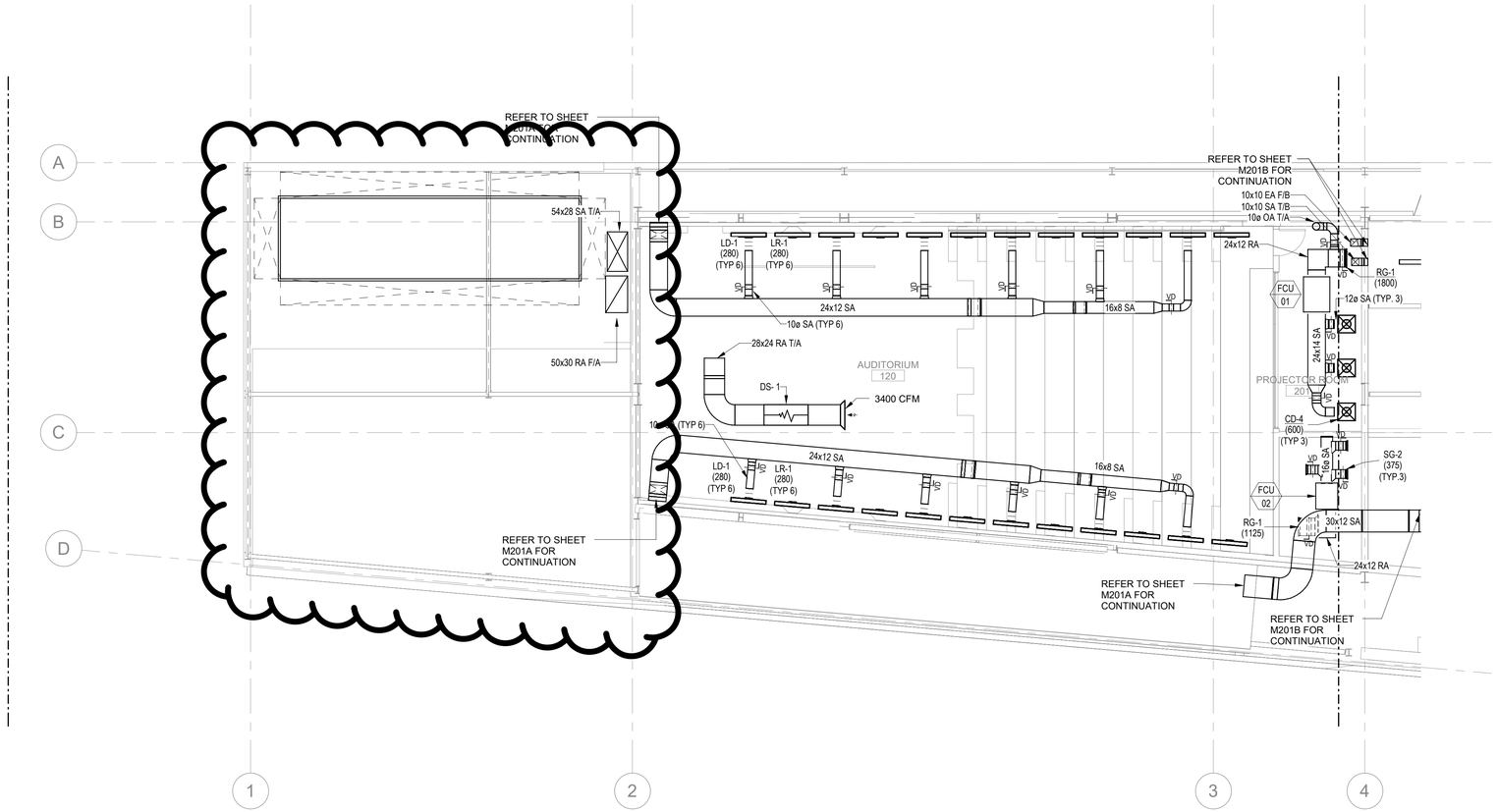

0 8' 16' 32'

SCALE: 1/16" = 1'-0"

N

NOT FOR CONSTRUCTION

09.AUG.2021

belzberg architects

2321 MAIN STREET
SANTA MONICA, CA 90405
310.453.9611

www.belzbergarchitects.com

ARUP

Arup North America Ltd.
900 Wilshire Boulevard,
19th Floor
Los Angeles CA 90017
Tel: 310 578 4400
www.arup.com

#	DESCRIPTION	DATE

HOLOCAUST MUSEUM LA EXPANSION

100 THE GROVE DRIVE
LOS ANGELES, CA 90036

MECHANICAL LEARNING CENTER MEZZ FLOOR PLAN - SOUTH

PROJECT NUMBER: 17009

M202A

08/09/21 19:13:14

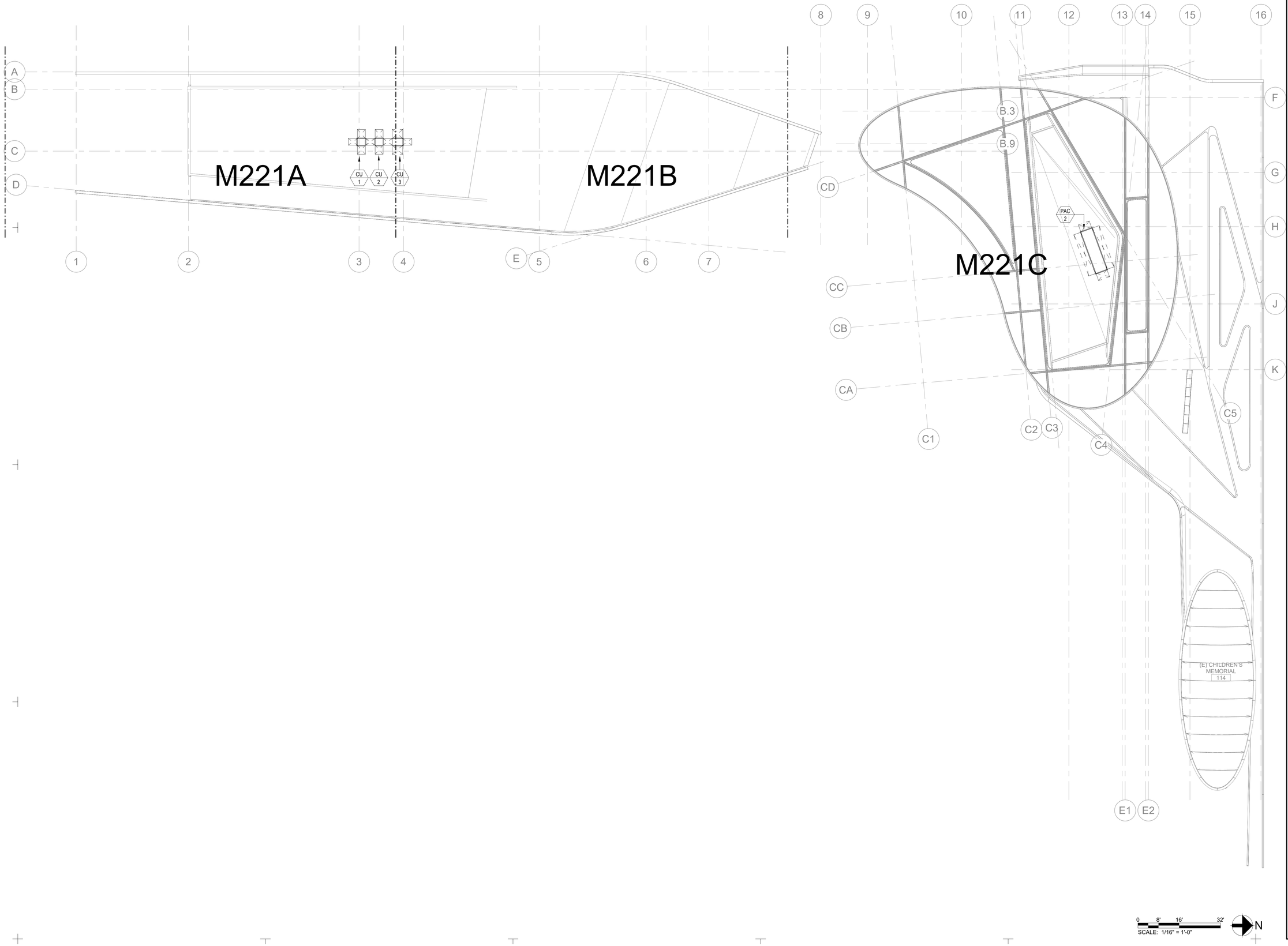

NOT FOR CONSTRUCTION

09.AUG.2021

ba
belzberg architects
2321 MAIN STREET
SANTA MONICA, CA 90405
310.453.9611
www.belzbergarchitects.com

ARUP
Arup North America Ltd.
900 Wilshire Boulevard,
19th Floor
Los Angeles CA 90017
Tel: 310 578 4400
www.arup.com

#	DESCRIPTION	DATE

HOLOCAUST MUSEUM LA EXPANSION

100 THE GROVE DRIVE
LOS ANGELES, CA 90036

MECHANICAL ROOF LEVEL PLAN - OVERALL

PROJECT NUMBER: 17009

M221

08/09/21 19:13:16

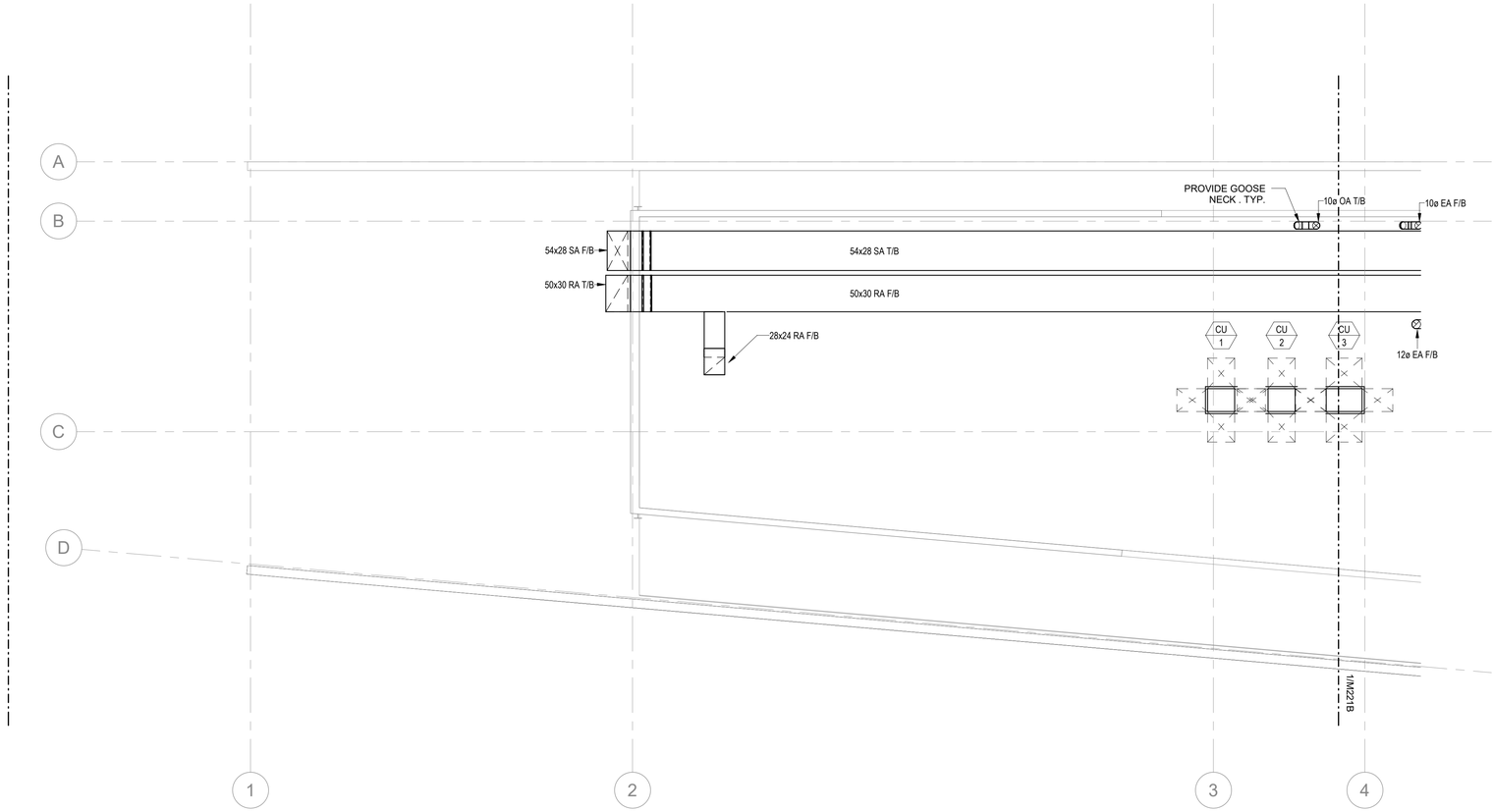

0 4' 8' 16'
SCALE: 1/8" = 1'-0"

N

NOT FOR CONSTRUCTION

09.AUG.2021

ba
belzberg architects
2321 MAIN STREET
SANTA MONICA, CA 90405
310.453.9611
www.belzbergarchitects.com

ARUP
Arup North America Ltd.
900 Wilshire Boulevard,
19th Floor
Los Angeles CA 90017
Tel: 310 578 4400
www.arup.com

#	DESCRIPTION	DATE

HOLOCAUST MUSEUM LA EXPANSION

100 THE GROVE DRIVE
LOS ANGELES, CA 90036

MECHANICAL LEARNING CENTER ROOF LEVEL PLAN - SOUTH

PROJECT NUMBER: 17009

M221A

08/09/21 19:13:16

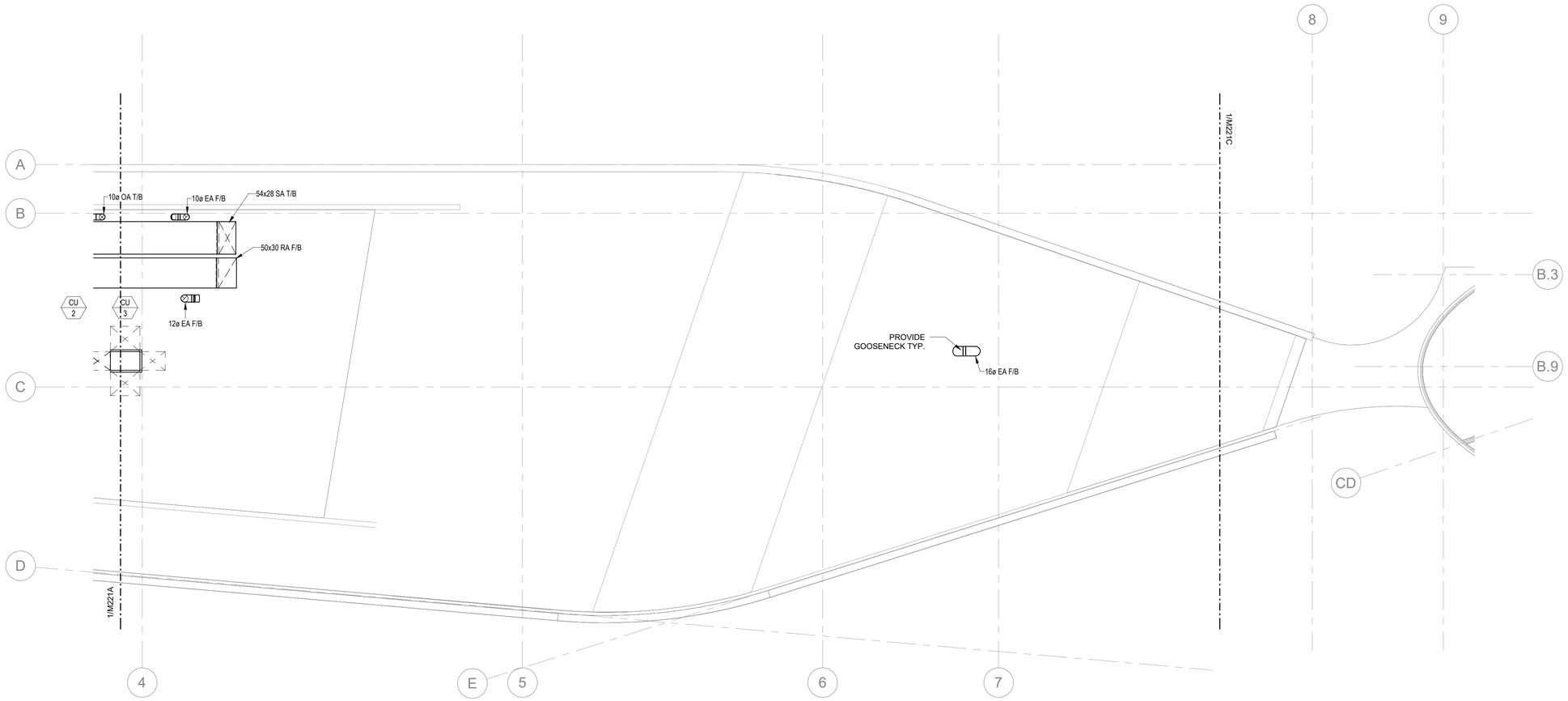

SCALE: 1/8" = 1'-0"

N

NOT FOR CONSTRUCTION

09.AUG.2021

belzberg architects

2321 MAIN STREET
SANTA MONICA, CA 90405
310.453.9611

www.belzbergarchitects.com

ARUP

Arup North America Ltd.
900 Wilshire Boulevard,
19th Floor
Los Angeles CA 90017
Tel: 310 578 4400
www.arup.com

#	DESCRIPTION	DATE

HOLOCAUST MUSEUM LA EXPANSION

100 THE GROVE DRIVE
LOS ANGELES, CA 90036

MECHANICAL LEARNING CENTER ROOF LEVEL PLAN - NORTH

PROJECT NUMBER: 17009

M221B

08/09/21 19:13:19

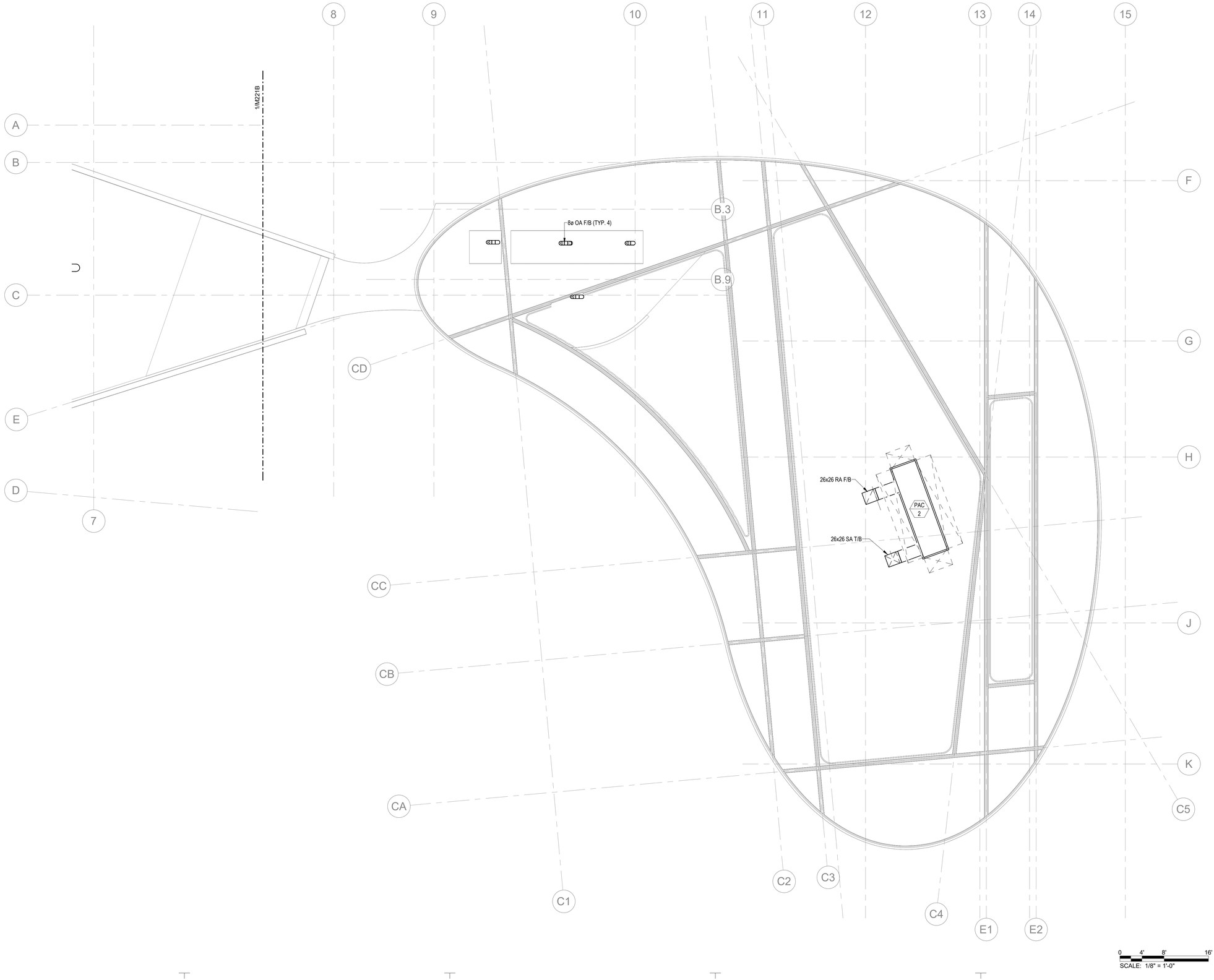

SCALE: 1/8" = 1'-0"

0 4' 8' 16'

N

NOT FOR CONSTRUCTION

09.AUG.2021

belzberg architects

2321 MAIN STREET
SANTA MONICA, CA 90405
310.453.9611

www.belzbergarchitects.com

ARUP

Arup North America Ltd.
900 Wilshire Boulevard,
19th Floor
Los Angeles CA 90017
Tel: 310 578 4400
www.arup.com

#	DESCRIPTION	DATE

HOLOCAUST MUSEUM LA EXPANSION

100 THE GROVE DRIVE
LOS ANGELES, CA 90036

MECHANICAL BOXCAR ROOF LEVEL PLAN

PROJECT NUMBER: 17009

M221C

08/09/21 19:13:21

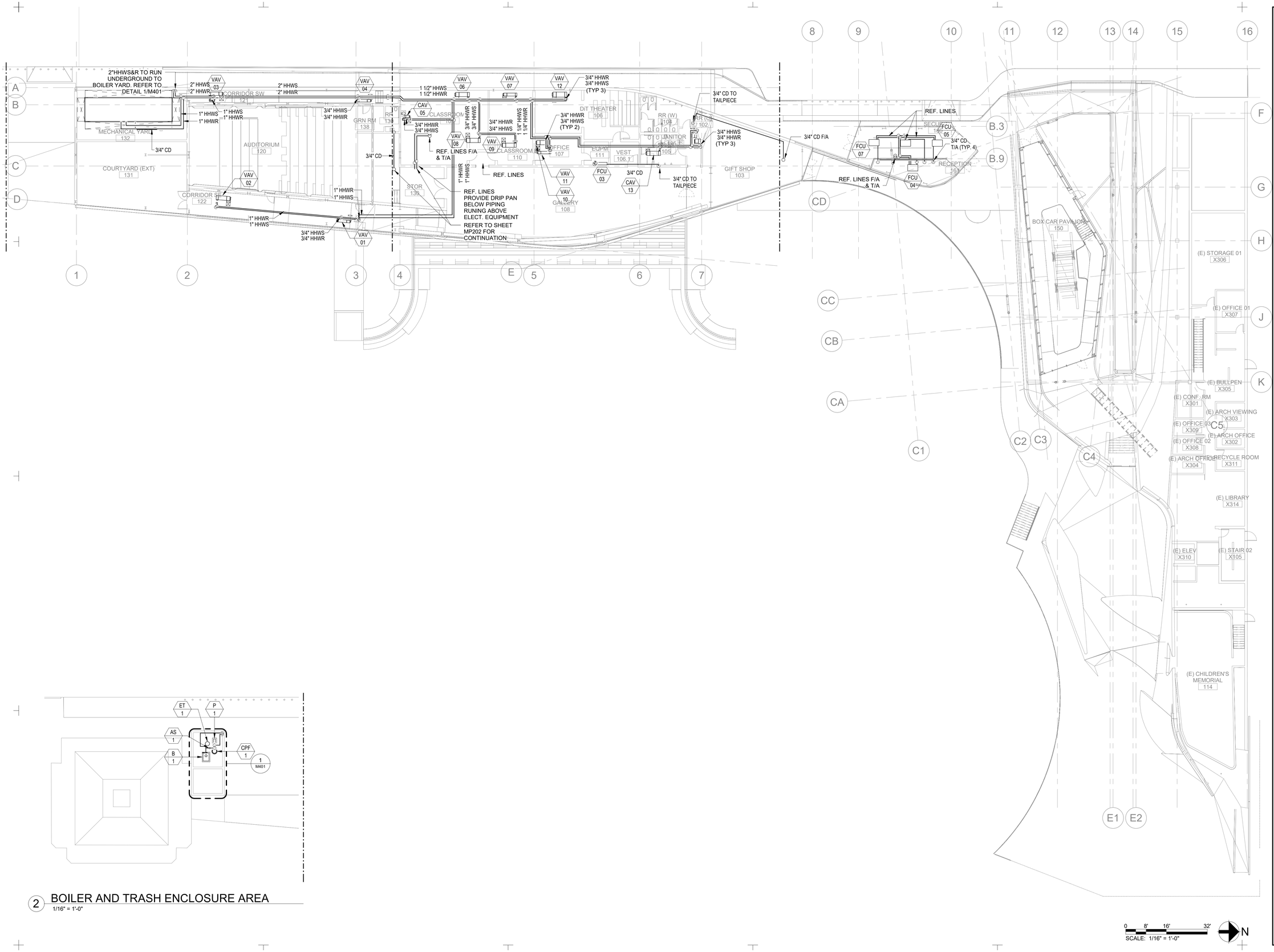

2 BOILER AND TRASH ENCLOSURE AREA
1/16" = 1'-0"

0 8' 16' 32'
SCALE: 1/16" = 1'-0"
N

NOT FOR CONSTRUCTION

09.AUG.2021

belzberg architects
2321 MAIN STREET
SANTA MONICA, CA 90405
310.453.9611
www.belzbergarchitects.com

ARUP
Arup North America Ltd.
900 Wilshire Boulevard,
19th Floor
Los Angeles CA 90017
Tel: 310 578 4400
www.arup.com

#	DESCRIPTION	DATE

HOLOCAUST MUSEUM LA EXPANSION

100 THE GROVE DRIVE
LOS ANGELES, CA 90036

MECHANICAL GROUND FLOOR PIPING PLAN

PROJECT NUMBER: 17009

MP201

08/09/21 19:13:29

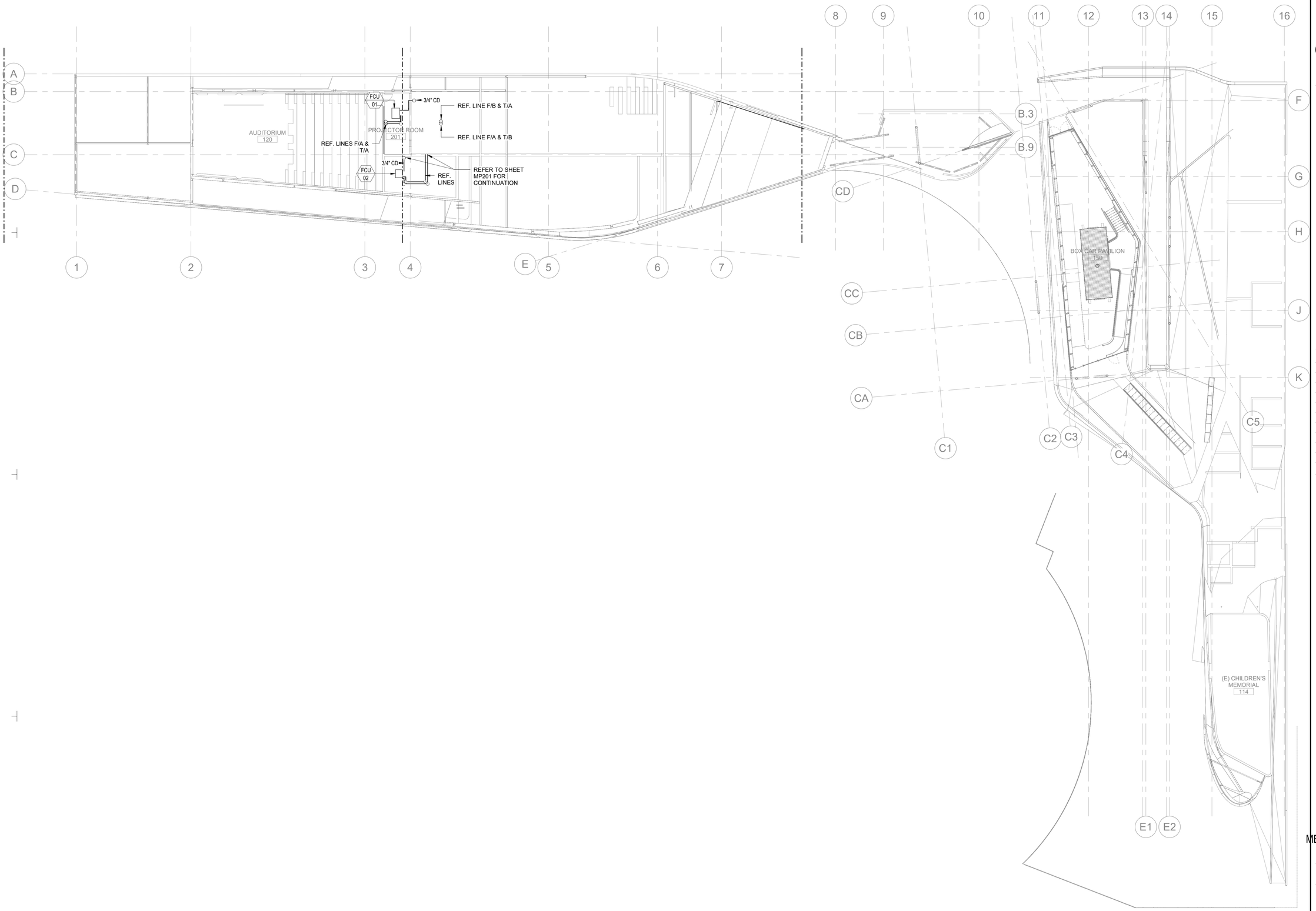

NOT FOR CONSTRUCTION

09.AUG.2021

belzberg architects
2321 MAIN STREET
SANTA MONICA, CA 90405
310.453.9611
www.belzbergarchitects.com

ARUP
Arup North America Ltd.
900 Wilshire Boulevard,
19th Floor
Los Angeles CA 90017
Tel: 310 578 4400
www.arup.com

#	DESCRIPTION	DATE

HOLOCAUST MUSEUM LA EXPANSION

100 THE GROVE DRIVE
LOS ANGELES, CA 90036

MECHANICAL MEZZANINE LEVEL PIPING PLAN

PROJECT NUMBER: 17009

MP202

09/09/21 19:13:36

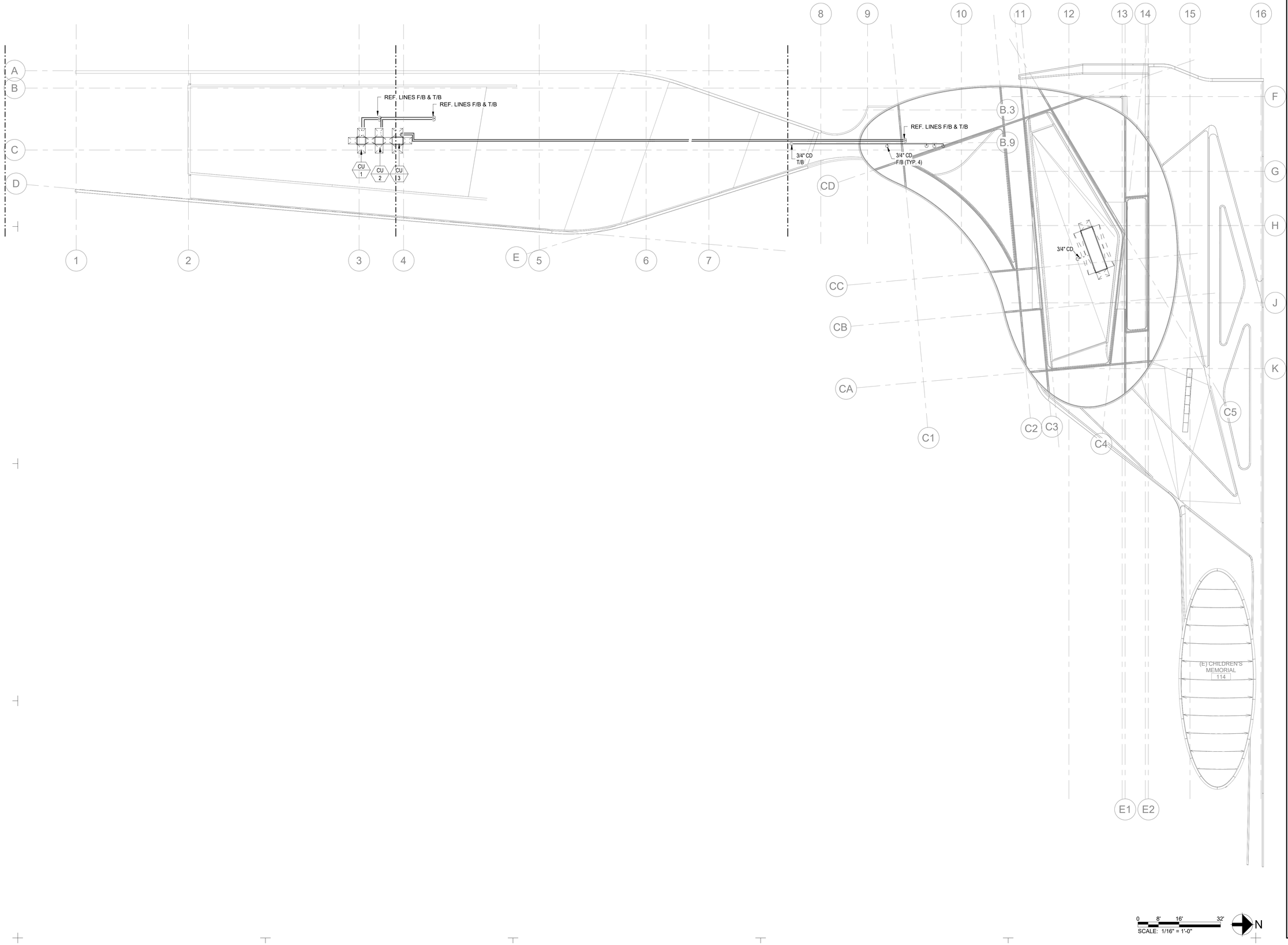

0 8' 16' 32'

SCALE: 1/16" = 1'-0"

N

NOT FOR CONSTRUCTION

09.AUG.2021

belzberg architects
2321 MAIN STREET
SANTA MONICA, CA 90405
310.453.9611
www.belzbergarchitects.com

ARUP
Arup North America Ltd.
900 Wilshire Boulevard,
19th Floor
Los Angeles CA 90017
Tel: 310 578 4400
www.arup.com

#	DESCRIPTION	DATE

HOLOCAUST MUSEUM LA EXPANSION

100 THE GROVE DRIVE
LOS ANGELES, CA 90036

MECHANICAL ROOF LEVEL PIPING PLAN

PROJECT NUMBER: 17009

MP221

08/09/21 19:13:38

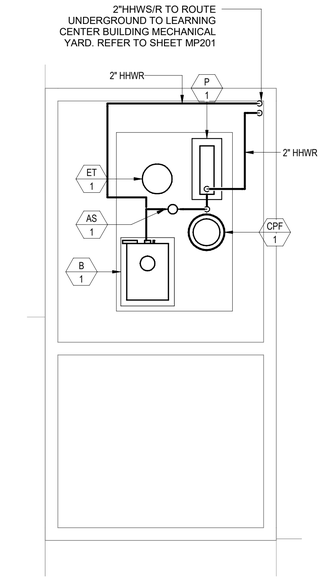

1 MECH_LEVEL 01 - BOILER ROOM
1/4" = 1'-0"

N

NOT FOR CONSTRUCTION

09.AUG.2021

ba
belzberg architects
2321 MAIN STREET
SANTA MONICA, CA 90405
310.453.9611
www.belzbergarchitects.com

ARUP
Arup North America Ltd.
900 Wilshire Boulevard,
19th Floor
Los Angeles CA 90017
Tel: 310 578 4400
www.arup.com

#	DESCRIPTION	DATE

HOLOCAUST MUSEUM LA EXPANSION

100 THE GROVE DRIVE
LOS ANGELES, CA 90036

MECHANICAL ENLARGED PLANS

PROJECT NUMBER: 17009

M401

08/09/21 19:13:21

PLUMBING DRAWING LIST

DWG NO.	DRAWING TITLE
P000	PLUMBING NOTES, SYMBOLS, & ABBREVIATIONS
P010	PLUMBING SCHEDULES
P100	PLUMBING SITE PLAN
P201	PLUMBING GROUND FLOOR PLAN - OVERALL
P201A	PLUMBING LEARNING CENTER GROUND FLOOR PLAN - SOUTH
P201B	PLUMBING LEARNING CENTER GROUND FLOOR PLAN - NORTH
P201U	PLUMBING UNDERGROUND PLAN - OVERALL
P201UA	PLUMBING LEARNING CENTER UNDERGROUND PLAN - SOUTH
P201UB	PLUMBING LEARNING CENTER UNDERGROUND PLAN - NORTH
P221	PLUMBING ROOF LEVEL PLAN - OVERALL
P221A	PLUMBING LEARNING CENTER ROOF LEVEL PLAN - SOUTH
P221B	PLUMBING LEARNING CENTER ROOF LEVEL PLAN - NORTH
P301	PLUMBING RISER DIAGRAMS
P302	PLUMBING RISER DIAGRAMS
P401	PLUMBING ENLARGED PLAN
P601	PLUMBING DETAILS

GENERAL NOTES

1. ENTIRE INSTALLATION SHALL CONFORM TO THE REQUIREMENTS OF CALIFORNIA BUILDING STANDARDS ADMINISTRATIVE CODE 2019, CALIFORNIA BUILDING CODE 2019, CITY OF LOS ANGELES PLUMBING CODE 2019, CITY OF LOS ANGELES FIRE CODE 2019, NATIONAL FIRE PROTECTION ASSOCIATION (NFPA) CODES AND STANDARDS, CITY OF LOS ANGELES FIRE MARSHALL, ALL OTHER APPLICABLE CODES, REGULATIONS AND AUTHORITIES HAVING JURISDICTION.
2. COORDINATE PLUMBING SYSTEMS WITH THE LATEST APPROVED ARCHITECTURAL DRAWINGS. A COPY OF THE GUIDELINES PUBLISHED BY SMACNA SHALL BE PROVIDED BY THE CONTRACTOR AND KEPT ON THE JOB AT ALL TIMES; ALL PLUMBING WORK SHALL COMPLY WITH T24 PART 5 CPC-2019.
3. PLUMBING DRAWINGS ARE GENERALLY DIAGRAMMATIC. VERIFY FIXTURE LOCATIONS AND MOUNTING HEIGHTS WITH ARCHITECTURAL DRAWINGS. VERIFY ROUGH-IN REQUIREMENTS PRIOR TO INSTALLING ANY FIXTURE OR EQUIPMENT FURNISHED BY OWNER.
4. STORM DRAIN SYSTEM SHALL BE SIZED BASED ON 2"/HR RAINFALL INTENSITY.
5. WHERE BRACING DETAILS ARE NOT SHOWN ON THE DRAWINGS OR IN THE GUIDELINES, THE FIELD INSTALLATIONS SHALL BE SUBJECT TO THE APPROVAL OF THE ARCHITECT, AND MECHANICAL ENGINEER.
6. REFER TO ARCHITECTURAL DRAWINGS FOR EXACT LOCATION OF ALL FIXTURES, FLOOR SINKS, AREA DRAINS, FLOOR DRAINS, ROOF AND OVER FLOW DRAINS.
7. PROVIDE SHUT-OFF VALVES AT EACH BRANCH LINE CONNECTING TO A MAIN WHETHER OR NOT SHOWN ON THE PLANS.
8. ELECTRICAL CONTRACTOR SHALL SUPPLY, INSTALL AND TERMINATE ALL 115 VOLT POWER CIRCUIT WIRING AND CONDUIT FOR PLUMBING SYSTEM. CONTROLS CONTRACTOR SHALL SUPPLY, INSTALL AND TERMINATE ALL CONTROL WIRING, EQUIPMENT MOUNTING BOXES, AND ALL ASSOCIATED LOW VOLTAGE CONDUIT.
9. PROVIDE TRAP PRIMER TO ALL FLOOR DRAINS, FLOOR SINKS & COMMON WASTE FLOOR DRAINS. LOCATE ACCESS PANELS CLEAR FROM OBSTRUCTIONS.
10. ALL PIPING SHALL BE LABELED PER SPECIFICATION & NOT LESS THAN 10' -0" INTERVALS.
11. CONTRACTOR SHALL SUBMIT SHOP DRAWINGS COMPLETE WITH SEISMIC CALCULATIONS FOR SUPPORT AND BRACING OF EQUIPMENT AND PIPES.
12. REFER TO STRUCTURAL DRAWINGS FOR HOUSEKEEPING PADS.
13. PROVIDE AND INSTALL WATER HAMMER ARRESTORS ON WATER BRANCH PIPING SERVING FIXTURES WITH FLUSH VALVES OR PRIOR TO ANY QUICK CLOSING WATER DEVICE. PLACEMENT AND SIZING OF ARRESTORS SHALL BE IN ACCORDANCE WITH PDI STANDARD WH-201.
14. REFER TO ARCHITECTURAL SPECIFICATION FOR APPROVED FIRE STOPPING SYSTEM. PIPING PENETRATION THROUGH FIRE RATED WALL AND FLOOR SHALL BE IN ACCORDANCE WITH UL STANDARD.
15. ALL PIPING PASSING THROUGH SEPARATION JOINTS USED AS BUILDING SEISMIC SEPARATIONS SHALL HAVE FLEXIBLE CONNECTIONS TO COMPENSATE FOR SEISMIC MOVEMENT AS REQUIRED. PROVIDE HANGERS ON EACH SIDE OF FLEXIBLE CONNECTION.
16. ALL VENT CONNECTIONS FOR FIXTURES COMPLY WITH PER LAPC 905.3.
17. PROVIDED APPROVED INSULATION WRAP ON ALL EXPOSED WATER SUPPLY AND DRAIN PIPING FOR HANDICAP LAVATORIES AND SINKS.
18. INSTALL SHUT-OFF VALVES AT EACH POC TO EQUIPMENT; PROVIDE VALVES AND OTHER PIPING SPECIALTIES SAME SIZE AS LINE SIZE SHOWN UNLESS OTHERWISE NOTED.
19. ALL CLEAN OUTS TO BE INSTALLED PER SECTION 707 OF THE CITY OF LOS ANGELES PLUMBING CODE.
20. ALL DEVICES AND/OR COMPONENTS THAT COME IN CONTACT WITH POTABLE WATER SERVICE MUST COMPLY W/CA AB1953.
21. ALL FAUCETS IN PUBLIC RESTROOMS SHALL BE SELF-CLOSING SENSOR FAUCETS.
22. PUBLIC LAVATORIES SHALL HAVE CONTROLS TO LIMIT THE WATER TEMPERATURE TO 100° F.
23. SERVICE SINKS SHALL HAVE CONTROLS TO LIMIT THE WATER TEMPERATURE TO 120°F.
24. PIPE IN CONCRETE SHALL BE WRAPPED WITH FLEX WRAP II 1/8" SHEET CLOSED CELL POLYETHYLENE.
25. DOMESTIC POTABLE WATER SYSTEM SHALL BE DISINFECTED PRIOR TO USE ACCORDING TO THE METHOD SET IN SECTION 609.9 OF THE 2020 CITY OF LOS ANGELES PLUMBING CODE.
26. ALL DEVICES AND/OR COMPONENTS THAT COME IN CONTACT WITH POTABLE WATER SERVICE MUST COMPLY W/CA AB1953.
27. NEW PLUMBING FIXTURES AND FITTING SHALL NOT EXCEED THE MAXIMUM ALLOWABLE FLOW RATES SPECIFIED IN SECTION 5.303.2. OF LOS ANGELES PLUMBING CODE.
28. ALL EQUIPMENT, FIXTURES, MATERIALS SHALL BE LISTED.
29. ALL PLUMBING FIXTURES SHALL MEET THE FLOW REQUIREMENTS SPECIFIED IN THE LOS ANGELES PLUMBING CODE.
30. ALL FAUCETS IN PUBLIC RESTROOMS SHALL BE SELF-CLOSING OR SELF-CLOSING METERING FAUCETS.
31. ALL PLUMBING PIPING, VALVES, DEVICES EQUIPMENT AND APPUTERNANCES SHALL BE LISTED BY AN APPROVED THIRD PARTY TESTING AGENCY FOR THE INTENT OF USE.
32. LOCKS SHALL BE INSTALLED ON ALL PUBLICLY ACCESIBLE EXTERIOR FAUCETS AND HOSE BIBS.
33. EXCEPT AS PROVIDED IN THIS SECTION, FOR SITES WITH OVER 500 SQUARE FEET OF LANDSCAPE AREA, ALTERNATE WASTE PIPING SHALL BE INTALLED TO PERMIT DISHCARGE FROM THE CLOTHES WASHER, BATHTUB, SHOWERS, AND BATHROOM/RESTROOMS WASH BASINS TO BE USED FOR A FUTURE GRAYWATER IRRIGATION SYSTEM.
34. EXCEPT AS PROVIDED IN THIS SECTION, WHERE CITY RECYCLED WATER IS AVAILABLE WITHIN 200 FEET OF THE PROPERTY LINE, WATER CLOSETS, URINALS, FLOOR DRAINS, AND PROCESS COOLING AND HEATING IN THE BUILDING SHALL BE SUPPLIED FROM RECYCLED WATER AND SHALL BE INSTALLED IN ACCORDANCE WITH THE LOS ANGELES PLUMBING CODE.
35. PROVIDE A HOT WATER SYSTEM COMPLYING WITH ONE OF THE FOLLOWING: A. THE HOT WATER SYSTEM SHALL NOT ALLOW MORE THAN 0.6 GALLONS OF WATER TO BE DELIVERED TO ANY FIXTURE BEFORE HOT WATER ARRIVES. B. WHERE A HOT WATER RECIRCULATION OR ELECTRIC RESISTANCE HEAT TRACE WIRE SYSTEM IS INSTALLED, THE BRANCH FROM THE RECIRCULATING LOOP OR ELECTRIC RESISTANCE HEAT TRACE WIRE TO THE FIXUTRE SHALL CONTAIN A MAXIMUM OF 0.6 GALLONS.

SYMBOLS

SYMBOL	DESCRIPTION
	SANITARY PIPING BELOW GRADE
	SANITARY PIPING ABOVE GRADE
	VENT PIPING
SD	STORM DRAINAGE PIPING
SD	STORM DRAINAGE PIPING BELOW GRADE
	COLD WATER PIPING
	HOT WATER PIPING
	HOT WATER RETURN PIPING
G	GAS PIPING
	SHUT-OFF VALVE
	CHECK VALVE
	PRESSURE REDUCING VALVE
	BALANCING VALVE ASSEMBLY
	COCK VALVE
	VALVE IN VERTICAL
	CURB VALVE
	MIXING VALVE
	PIPE DROP, RISE OR DOWN
	PIPE CONNECTION, TOP
	PIPE CONNECTION, BOTTOM
	PIPE UP
	"P" TRAP
	CLEANOUT
	CLEANOUT DECK PLATE
	CAPPED OUTLET
	DIELECTRIC UNION
	VENT THROUGH ROOF
	FLOOR DRAIN, AREA DRAIN
	FLOOR SINK
	ROOF DRAIN, OVERFLOW DRAIN
	YARD HYDRANT
	HOSE BIBB
	WALL HYDRANT
VB	VACUUM BREAKER ASSEMBLY
	THERMOMETER
	PRESSURE GAUGE W/VALVE
BFP	BACKFLOW PREVENTER
	FLOOR, AREA DRAIN (RISER)
	ROOF DRAIN (RISER)
	WATER HAMMER ARRESTOR
	FRESH AIR INLET (FAI)
M	METER
F	WATER FILTER
	PUMP
	DIRECTION OF FLOW
	PIPE BREAK
P / #	RISER DESIGNATION
ST / #	LEADER DESIGNATION
* / #	EQUIPMENT DESIGNATION

SYMBOLS

SYMBOL	DESCRIPTION
AV	ACID VENT PIPING
AW	ACID WASTE PIPING
CA	COMPRESSED AIR PIPING (INSTRUMENT GRADE)
GRW	GRAY WATER PIPING
EPD	EJECTOR PUMP DISCHARGE PIPING
FAI	FRESH AIR INLET
GW	GREASE WASTE PIPING
IW	INDIRECT WASTE PIPING
SPD	SUMP PUMP DISCHARGE PIPING
OD	OVERFLOW DRAINAGE PIPING
TF	TANK FILL PIPING
TW	TEPID WATER PIPING
NP	NON-POTABLE WATER PIPING
VAC	VACUUM PIPING
O2	OXYGEN PIPING
N2	NITROGEN PIPING
CO2	CARBON DIOXIDE PIPING
TP	TRAP PRIMER PIPING
	ELECTRIC HEAT TRACING
	EXISTING PIPING TO BE REMOVED
	EXISTING PIPING TO BE ABANDONED
	POINT OF DISCONNECTION FOR EXISTING WORK
	POINT OF CONNECTION NEW PIPE TO EXISTING
	MOTOR VALVE
	SOLENOID VALVE
	DIAPHRAGM VALVE
	BALANCING VALVE
	ANGLE VALVE
	OS & Y VALVE
	OS & Y VALVE IN VERTICAL
	GAS PRESSURE REGULATOR
	AUTOMATIC AIR VENT VALVE
	T & P RELIEF VALVE
	BACKWATER VALVE
TP	TRAP PRIMER
T & P	HOUSE TRAP
	AQUASTAT
EJ	EXPANSION JOINT
	FLEXIBLE CONNECTION
	EXPANSION LOOP
	CONCENTRIC REDUCER
	STRAINER Y-TYPE
	BASKET STRAINER
	STANDPIPE (RISER)
	WATERTIGHT PIPE SLEEVE, BEAM PENETRATION
GD	GUTTER DRAIN (RISER)
	FUNNEL DRAIN (RISER)
FS	FLOOR SINK (RISER)
MS	MOP SINK (RISER)
SH	SHOWER DRAIN (RISER)

ABBREVIATIONS

SYMBOL	DESCRIPTION
AD	AREA DRAIN
ARCH	ARCHITECTURAL
BFP	BACKFLOW PREVENTER
BLDG	BUILDING
CA	COMPRESSED AIR
CLG	CEILING
CO	CLEANOUT
CODP	CLEANOUT DECK PLATE
COWP	CLEANOUT WALL PLATE
CONN	CONNECTION
CONT	CONTINUATION
CW	DOMESTIC COLD WATER
DCV	DOUBLE CHECK VALVE
DET	DETAIL
DFU	DRAINAGE FIXTURE UNIT
DIA	DIAMETER
DIM	DIMENSION
DN	DOWN
DR	DRAIN
DWG	DRAWING
EA	EACH
EJ	EXPANSION JOINT
EL	ELEVATION
EQ	EQUAL
EWC	ELECTRIC WATER COOLER
EWH	ELECTRIC WATER HEATER
EXIST	EXISTING
FAI	FRESH AIR INLET
FCO	FLOOR CLEANOUT
FD	FLOOR DRAIN
FS	FLOOR SINK
F.F.	FINISH FLOOR
FL	FLOOR
G	GAS PIPING
GAL	GALLON
GD	GUTTER DRAIN
GPH	GALLON PER HOUR
GPM	GALLON PER MINUTE
HB	HOSE BIBB
HW	DOMESTIC HOT WATER
HWR	DOMESTIC HOT WATER RETURN
I.E.	INVERT ELEVATION
IW	INDIRECT WASTE
LG	LOW PRESSURE GAS
MAX	MAXIMUM
MECH	MECHANICAL
MG	MEDIUM PRESSURE GAS
MH	MANHOLE
MIN	MINIMUM
NC	NORMALLY CLOSED
NO	NORMALLY OPEN
NTS	NOT TO SCALE
OD	OVERFLOW DRAIN
PRV	PRESSURE REDUCING VALVE
RD	ROOF DRAIN
RPZ	REDUCED PRESSURE ZONE
S	SANITARY WASTE
SF	SQUARE FEET
ST	STORM DRAINAGE
TD	TRENCH DRAIN
TP	TRAP PRIMER
TYP	TYPICAL
V	VENT
UON	UNLESS OTHERWISE NOTED
VIF	VERIFY IN FIELD
VLV	VALVE
VTR	VENT THROUGH ROOF
W	WASTE
W/	WITH
WC	WATER CLOSET
WCO	WALL CLEANOUT
W/O	WITHOUT
WH	WALL HYDRANT
WHA	WATER HAMMER ARRESTOR
YH	YARD HYDRANT

NOT FOR CONSTRUCTION

09.AUG.2021

belzberg architects
2321 MAIN STREET
SANTA MONICA, CA 90405
310.453.9611
www.belzbergarchitects.com

ARUP
Arup North America Ltd.
900 Wilshire Boulevard,
19th Floor
Los Angeles CA 90017
Tel: 310 578 4400
www.arup.com

#	DESCRIPTION	DATE

HOLOCAUST MUSEUM LA EXPANSION

100 THE GROVE DRIVE
LOS ANGELES, CA 90036

PLUMBING NOTES, SYMBOLS, & ABBREVIATIONS

PROJECT NUMBER: 17009

P000

08/09/21 13:40

THERMOSTATIC MIXING VALVE SCHEDULE

SYMBOL	LOCATION	SERVICE	MANUFACTURER & MODEL NO.	TYPE	AREA BEING SERVED	SET TEMP (°F)	FLOW RATE, (GPM)	INLET/OUTLET SIZE (IN)	REMARKS
MV-1	PUBLIC RESTROOMS	DOMESTIC HOT WATER	LEONARD 270-LF	THERMOSTATIC CONTROL	PUBLIC RESTROOMS	105-107	0.25-3	1/2"	SINGLE VALVE SERVING EACH GANG LAVS AT THE PUBLIC RESTROOMS.

BACKFLOW PREVENTER SCHEDULE

SYMBOL	LOCATION	TYPE	SYSTEM	CAPACITY (GPM)	SIZE (IN)	PRESSURE LOSS (PSI)	MANUFACTURER & MODEL NO.	REMARKS
BFP-1	MECHANICAL YARD	REDUCED PRESSURE	DOMESTIC COLD WATER	80	3"	12	WATTS LF909-NRS-S-FDA	-
BFP-2	MECHANICAL YARD	DUAL CHECK	FIRE PROTECTION WATER	450	4"	5	WATTS 744DCDAOSY	-
BFP-3	BOILER YARD	REDUCED PRESSURE	MECHANICAL MAKE UP	10	1 1/4"	11	WATTS LF909-QT-S	BOILER MAKE UP

ELECTRIC WATER HEATER SCHEDULE

SYMBOL	LOCATION	TYPE	STORAGE (GALLONS)	RECOVERY	TANK SIZE		MANUFACTURER & MODEL NO.	ELECTRICAL DATA				REMARKS
					HEIGHT (IN)	DIA. (IN)		KW	VOLT	PHASE	HZ	
EWH 1	JANITOR	TANK	40	20 GPH @ 60°F	32 1/4"	24"	AO SMITH DEL-40	3	480	3	60	DUAL ELEMENT WITH NON-SIMULTANEOUS OPERATION. SEE DETAIL 1/P401
EWH-2	RESTROOM 139	INSTANTANEOUS	-	-	-	-	EEMAX AM004277T	4.1	277	1	60	SEE DETAIL 3/P401
EWH-3	CLASSROOM A 109	INSTANTANEOUS	-	-	-	-	EEMAX AM010277T	10	277	1	60	SEE DETAIL 3/P401

PUMP SCHEDULE

SYMBOL	LOCATION	TYPE	SYSTEM	CAPACITY		MANUFACTURER & MODEL NO.	ELECTRICAL REQUIREMENTS				EMERGENCY POWER	OPERATING WEIGHT (LBS)	REMARKS
				FLOW (GPM)	HEAD (FT)		HP	V	Ø	Hz			
CP-1	JANITOR	IN-LINE CIRCULATOR	120°F DOMESTIC HOT WATER	2.01	5.94	GRUNDFOS UPS 15-35 SFC	0.08	115	1	60	NO	6	AT EWH-1. SEE DETAIL 1/P401

FITNESS DOMESTIC WATER CALCULATION

					COLD WATER
	INFORMATION OBTAINED FROM:	LADWP			
A.	DESIGN BASE PRESSURE:	MAXIMUM			168 PSI
		MINIMUM			140 PSI
		ELEVATION			201
B.	TOTAL FIXTURE UNITS:	FIXTURE TYPE:	MOSTLY FLUSH VALVE		
		FIXTURE UNITS (EXISTING)			0 F.U
		FIXTURE UNITS (NEW)			78.5 F.U.
		TOTAL FIXTURE UNITS			78.5 F.U.
C.	TOTAL WATER DEMAND:	DOMESTIC			62 GPM
		IRRIGATION			0 GPM
		MECHANICAL (HVAC)			10 GPM
		OTHER			0 GPM
		TOTAL			72 GPM

D.	RESIDUAL PRESSURE REQUIRED AT REMOTE OUTLET:				CPC608.1	25.00	PSI
E.	PRESSURE LOSS DUE TO HEIGHT	24	FT*0.433			10.39	PSI
F.	PRESSURE LOSS THRU	3"	METER @	72	GPM	0.90	PSI
G.	PRESSURE LOSS	N/A	PRV DEVICE @	72	GPM	0.00	PSI
H	OTHER PRESSURE LOSSES 4"BFP					11.00	PSI
I.	TOTAL PRESSURE LOSS					47.29	PSI
K.	PRESSURE AVAILABLE FOR FRICTION LOSS					92.71	PSI

L.	DEVELOPED PIPE LENGTH:	BUILDING TO LAST FIXTURE			80 FT
		20	% FOR FITTINGS		16 FT
		TOTAL DEVELOPED LENGTH			96 FT
	ALLOWABLE FRICTION LOSS PER 100' OF PIPE	100(92.71)	/ (	96)	96.57 PSI

COLD WATER: PIPE SIZES BASED ON TYPE "L" COPPER @ 96.50 PSI/100' & 8 FPS MAX.

COLD WATER

PIPE SIZE (IN)	F.T. F.U.	F.V. F.U.	PIPE SIZE (IN)	F.T. F.U.	F.V. F.U.	PIPE SIZE (IN)	F.T. F.U.	F.V. F.U.
1/2	6	#N/A	1 1/2	103	#N/A	3 1/2	1091	430
3/4	16	#N/A	2	254	14	4	1668	811
1	30	#N/A	2 1/2	455	60	6	2200	2200
1 1/4	56	#N/A	3	719	186	8	4480	4480

HOT WATER: PIPE SIZES BASED ON TYPE "L" COPPER @ 96.50 PSI/100' & 5 FPS MAX.

HOT WATER

PIPE SIZE (IN)	F.T. F.U.	PIPE SIZE (IN)	F.T. F.U.	PIPE SIZE (IN)	F.T. F.U.
1/2	3	1 1/2	46	3 1/2	585
3/4	8	2	119	4	840
1	16	2 1/2	245		
1 1/4	28	3	406		

UTILITY LOAD CALCULATION FITNESS

CODE: CALIFORNIA PLUMBING CODE 2019

QTY.	FIXTURE	TYPE	WASTE		WATER		HOT WATER		GAS	
			F.U.	TOTAL	F.U.	TOTAL	F.U.	TOTAL	CFH	TOTAL
11	WATER CLOSET, 1.6 GPF FLUSH VALVE	PUBLIC	4.0	44.0	5.0	55.0	0.0	0.0		
2	URINAL, 1.0 GPF FLUSH VALVE	PUBLIC	2.0	4.0	4.0	8.0	0.0	0.0		
9	LAVATORY (SINGLE)	PUBLIC	1.0	9.0	1.0	9.0	1.0	9.0		
1	DRINKING FOUNTAIN	PUBLIC	0.5	0.5	0.5	0.5	0.0	0.0		
2	SERVICE SINK/MOP BASIN	PUBLIC	3.0	6.0	3.0	6.0	3.0	6.0		
2	FLOOR DRAIN, 2" TRAP	PUBLIC	2.0	4.0	0.0	0.0	0.0	0.0		
2	RECEPTOR, INDIRECT WASTE,<7.5GPM	PUBLIC	1.0	2.0	0.0	0.0	0.0	0.0		
		PUBLIC	0.0	0.0	0.0	0.0	0.0	0.0		
	HVAC EQUIPMENT									0
	DOMESTIC WATER									0
	KITCHEN EQUIPMENT									0
	OTHERS									0
			TOTAL	69.5	TOTAL	78.5	TOTAL	15.0	TOTAL	0

PLUMBING FIXTURE SCHEDULE

SYM.	DESCRIPTION	FIXTURE UNIT		MIN BRANCH SIZE (IN)				TRAP SIZE	TYPE	APPLICATION	MANUFACTURER & MODEL	REMARKS
		W/S	CW	W	V	CW	HW					
WC-1	WATER CLOSET	4	5	4"	2"	1 1/2"	-	INT.	WALL MOUNTED	PUBLIC	_	ELONGATED BOWL,1.28 GPF.
WC-2	WATER CLOSET	4	5	4"	2"	2 1/2"	-	INT.	WALL MOUNTED	ADA PUBLIC	_	MOUNTED PER ADA REQUIREMENTS, ELONGATED BOWL 1.28 GPF.
U-1	URINAL	2	4	2"	1 1/2"	1"	-	INT.	WALL MOUNTED	PUBLIC	_	0.125GPF,
U-2	URINAL	2	4	2"	2 1/2"	1"	-	INT.	WALL MOUNTED	ADA PUBLIC	_	MOUNTED PER ADA REQUIREMENTS, 0.125 GPF.
L-1	LAVATORY	1	1	2"	1 1/2"	3/4"	3/4"	11/2" X 1 1/4"	UNDERCOUNTER MOUNTED	ADA PUBLIC	_	_
L-2	LAVATORY	1	1	2"	2 1/2"	3/4"	3/4"	11/2" X 1 1/4"	WALL MOUNTED	ADA PUBLIC	_	_
SS-1	SERVICE SINK	3	3	3"	2"	3/4"	3/4"	3"	FLOOR MOUNTED	-	CECO871 WITH CHICAGO FAUCET 305-VBRXKRCF	-
S-1	SINK	2	2	2"	1 1/2"	1/2"	1/2"	2"	UNDERCOUNTER MOUNTED	ADA	_	_
IM-1	ICE MAKER BOX	-	0.5	-	-	1/2"	-				SIOUX CHIEF 696-G1000PF	
DF-1	DRINKING FOUNTAIN	0.5	0.5	-	-	1/2"	-				SIOUX CHIEF 696-G1000PF	
TP-1	TRAP PRIMER	-	-	-	-	1/2"	-	-	-	-	PPP MPB-500-115V WITH DISTRIBUTION UNIT	PROVID TRAP PRIMER DISTRIBUTION UNIT (TPDU) FOR 2-4 DRAINS. AS REQUIRED
FD-1	FLOOR DRAIN	-	-	2"	1 1/2"	-	-	-	-	-	J.R. SMITH NO. 2005Y	PUBLIC RESTROOMS-
FD-2	FLOOR DRAIN	-	-	2"	2 1/2"	-	-	-	-	-	J.R. SMITH NO. 2110Y	MECHANICAL ROOM
HD-1	HUB DRAIN	8	-	6"	3"	-	-	6"	-	-	-	SEE DETAIL 4/P4.001.
HB-1	HOSE BIBB	-	2.5	-	-	3/4"	-	-	-	-	ZURN MODEL Z1341-XL	PIPE/WALL MOUNTED HOSE BIBB WITH NONREMOVABLE VACUUM BRAKER.
HB-2	HOSE BIBB	-	1	-	-	3/4"	-	-	-	-	ZURN MODEL Z1350	ENCASED WALL HYDRANT , ALL BRONZE INTERIOR PARTS, KEY OPERATED CONTROL VALVE, ADJUSTABLE STAINLESS STEEL BOX FURNISHED, WITH NONREMOVABLE VACUUM BRAKER.
HB-3	HOSE BIBB	-	1	-	-	3/4"	-	-	-	-	ZURN MODEL Z1388-XL	ENCASED ROOF HYDRANT , ALL BRONZE INTERIOR PARTS, KEY OPERATED CONTROL VALVE, ADJUSTABLE STAINLESS STEEL BOX FURNISHED, WITH NONREMOVABLE VACUUM BRAKER.
FS-1	FLOOR SINK	-	-	2"	2"	-	-	-	-	-	J.R. SMITH NO. 3140Y	PROVIDE WITH TRAP PRIMER CONNECTION, ACID RESISTANT COATED, SQUARE.
RR-1	ROOF RECEPTOR	-	-	-	-	-	-	-	-	-	J.R. SMITH 3970Y	

PLUMBING MATERIAL SCHEDULE

SERVICE	MATERIAL	PVC	COPPER TYPE "L"	COPPER TYPE "K"	BLACK STEEL	CAST IRON SOIL PIPE & FITTINGS	STAINLESS STEEL	REMARKS
DOMESTIC WATER	INSIDE		•					-
	OUTSIDE / UNDERGROUND			•				-
SANITARY WASTE , GRAY WASTE & VENT (SAN, V)	ABOVE GRADE					•		-
	BELOW GRADE					•		-
STORM & OVERFLOW DRAIN (SD, OD)	ABOVE GRADE					•		-
	BELOW GRADE					•		-

PRESSURE REDUCING VALVE ASSEMBLY SCHEDULE

SYMBOL	LOCATION	SYSTEM	CAPACITY (GPM)	SIZE (IN)	PRESSURE LOSS (PSI)	PRESSURE SET (PSI)	MANUFACTURER & MODEL NO.	DIMENSION (IN)		REMARKS
								LENGTH	WIDTH	
PRV-1	MECHANICAL YARD	DOMESTIC WATER	80	_	7	75	WILLKINS 500XLYSBR	10"	7 1/2"	LEAD FREE. SEE DETAIL 2/P401.

NOT FOR CONSTRUCTION

09.AUG.2021

belzberg architects
2321 MAIN STREET
SANTA MONICA, CA 90405
310.453.9611
www.belzbergarchitects.com

ARUP
Arup North America Ltd.
900 Wilshire Boulevard,
19th Floor
Los Angeles CA 90017
Tel: 310 578 4400
www.arup.com

#	DESCRIPTION	DATE

HOLOCAUST MUSEUM LA EXPANSION

100 THE GROVE DRIVE
LOS ANGELES, CA 90036

PLUMBING SCHEDULES

PROJECT NUMBER: 17009

P010

08/09/21 19:13:42

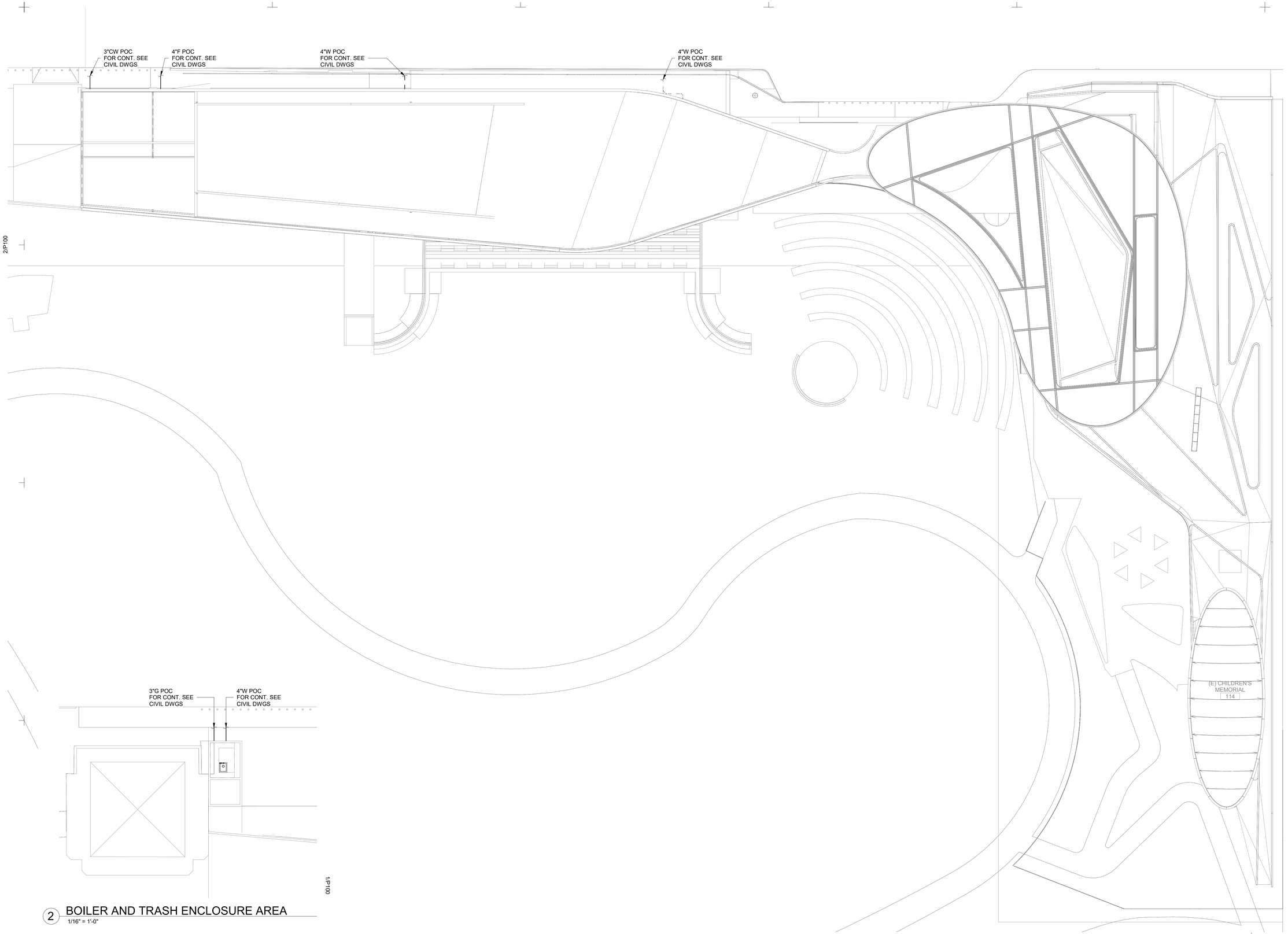

2 BOILER AND TRASH ENCLOSURE AREA
1/16" = 1'-0"

NOT FOR CONSTRUCTION

09.AUG.2021

ba
belzberg architects
2321 MAIN STREET
SANTA MONICA, CA 90405
310.453.9611
www.belzbergarchitects.com

ARUP
Arup North America Ltd.
900 Wilshire Boulevard,
19th Floor
Los Angeles CA 90017
Tel: 310 578 4400
www.arup.com

#	DESCRIPTION	DATE

HOLOCAUST
MUSEUM LA
EXPANSION

100 THE GROVE DRIVE
LOS ANGELES, CA 90036

PLUMBING SITE PLAN

PROJECT NUMBER: 17009

P100

08/09/21 19:13:47

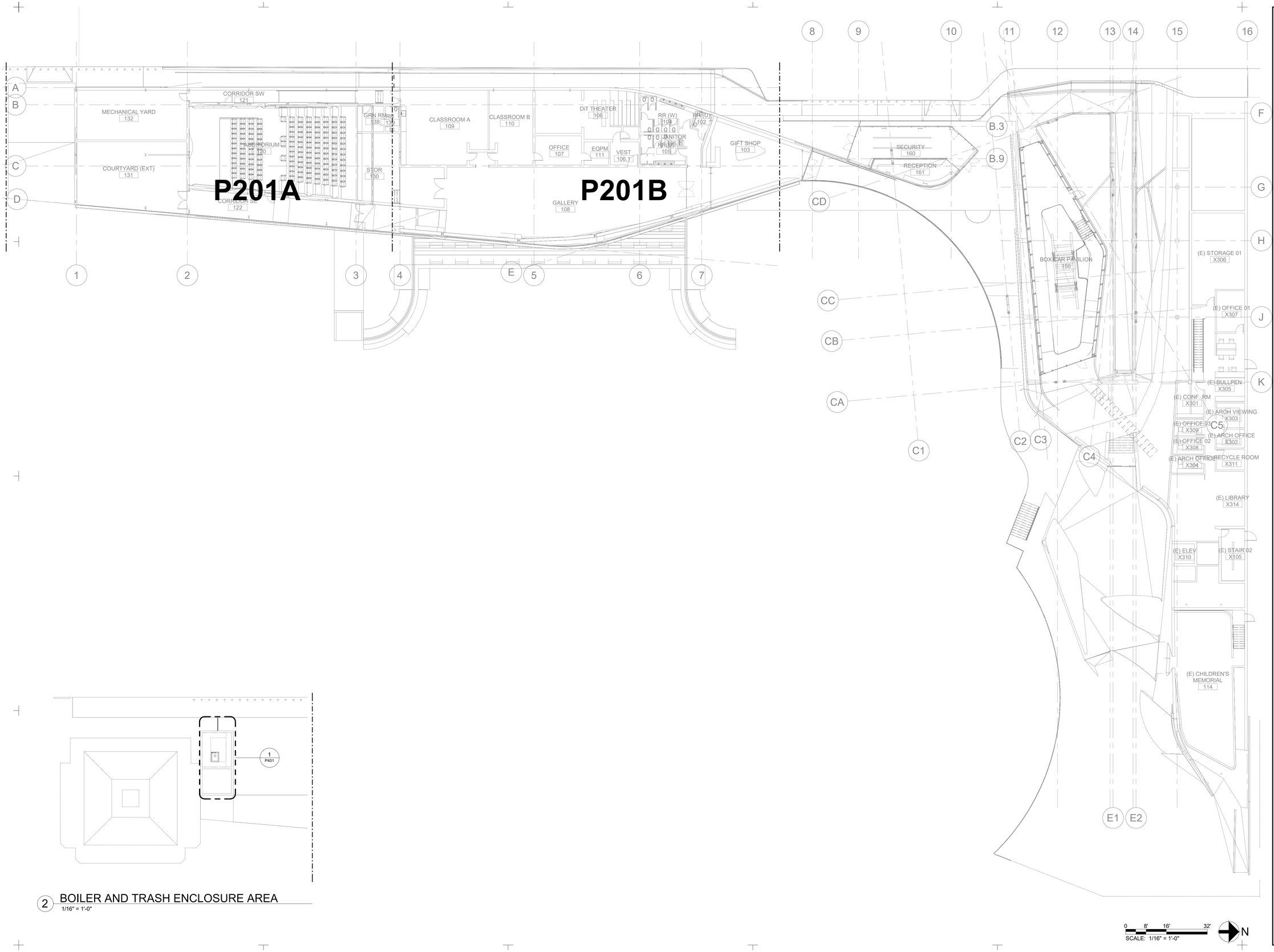

2 BOILER AND TRASH ENCLOSURE AREA
1/16" = 1'-0"

0 8' 16' 32'
SCALE: 1/16" = 1'-0"

N

NOT FOR CONSTRUCTION

09.AUG.2021

belzberg architects
2321 MAIN STREET
SANTA MONICA, CA 90405
310.453.9611
www.belzbergarchitects.com

ARUP
Arup North America Ltd.
900 Wilshire Boulevard,
19th Floor
Los Angeles CA 90017
Tel: 310 578 4400
www.arup.com

#	DESCRIPTION	DATE

HOLOCAUST MUSEUM LA EXPANSION

100 THE GROVE DRIVE
LOS ANGELES, CA 90036

PLUMBING GROUND FLOOR PLAN - OVERALL

PROJECT NUMBER: 17009

P201

08/09/21 19:13:54

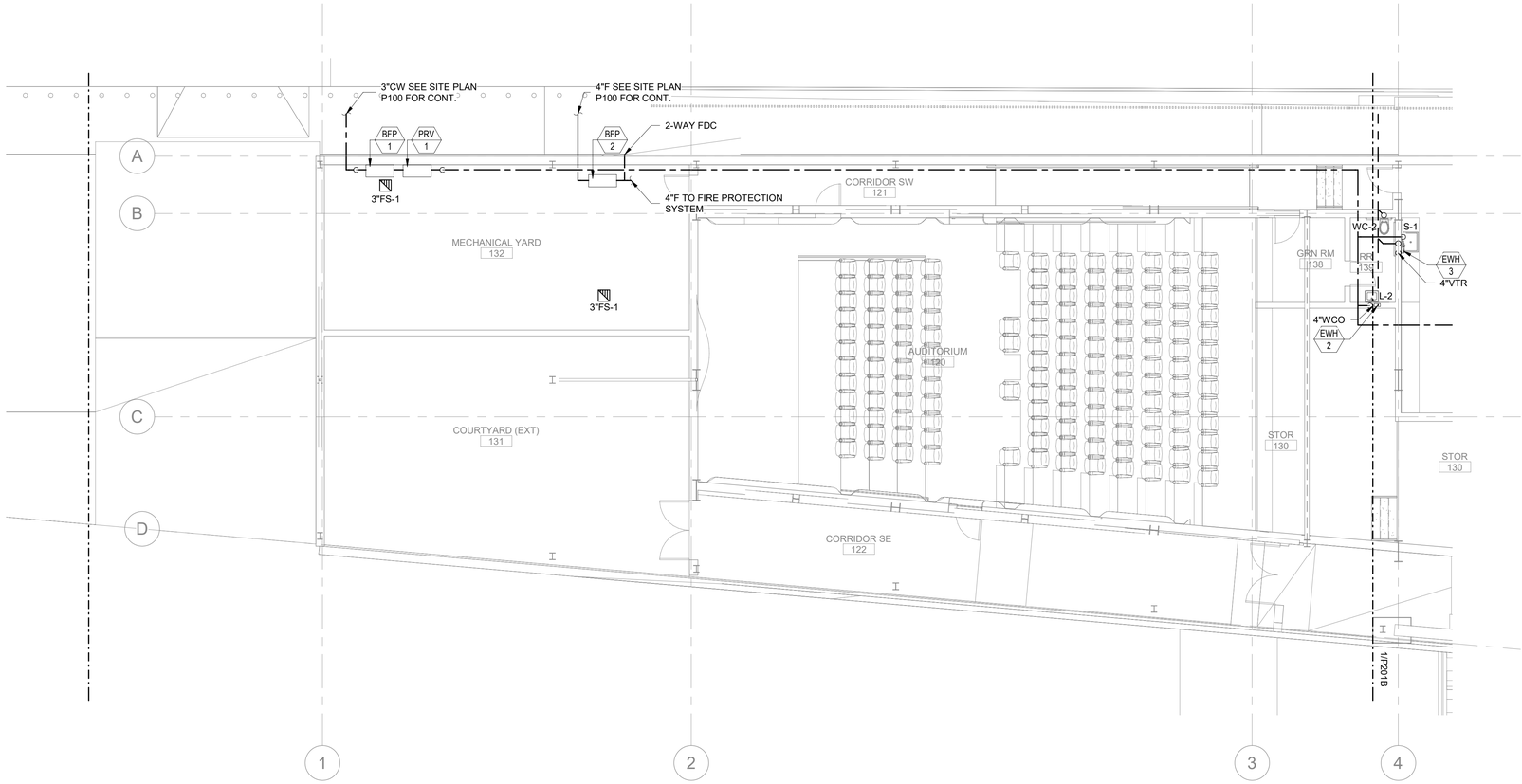

0 4' 8' 16'
SCALE: 1/8" = 1'-0"

N

NOT FOR CONSTRUCTION

09.AUG.2021

ba
belzberg architects
2321 MAIN STREET
SANTA MONICA, CA 90405
310.453.9611
www.belzbergarchitects.com

ARUP
Arup North America Ltd.
900 Wilshire Boulevard,
19th Floor
Los Angeles CA 90017
Tel: 310 578 4400
www.arup.com

#	DESCRIPTION	DATE

HOLOCAUST MUSEUM LA EXPANSION

100 THE GROVE DRIVE
LOS ANGELES, CA 90036

PLUMBING LEARNING CENTER GROUND FLOOR PLAN - SOUTH

PROJECT NUMBER: 17009

P201A

08/09/21 19:13:58

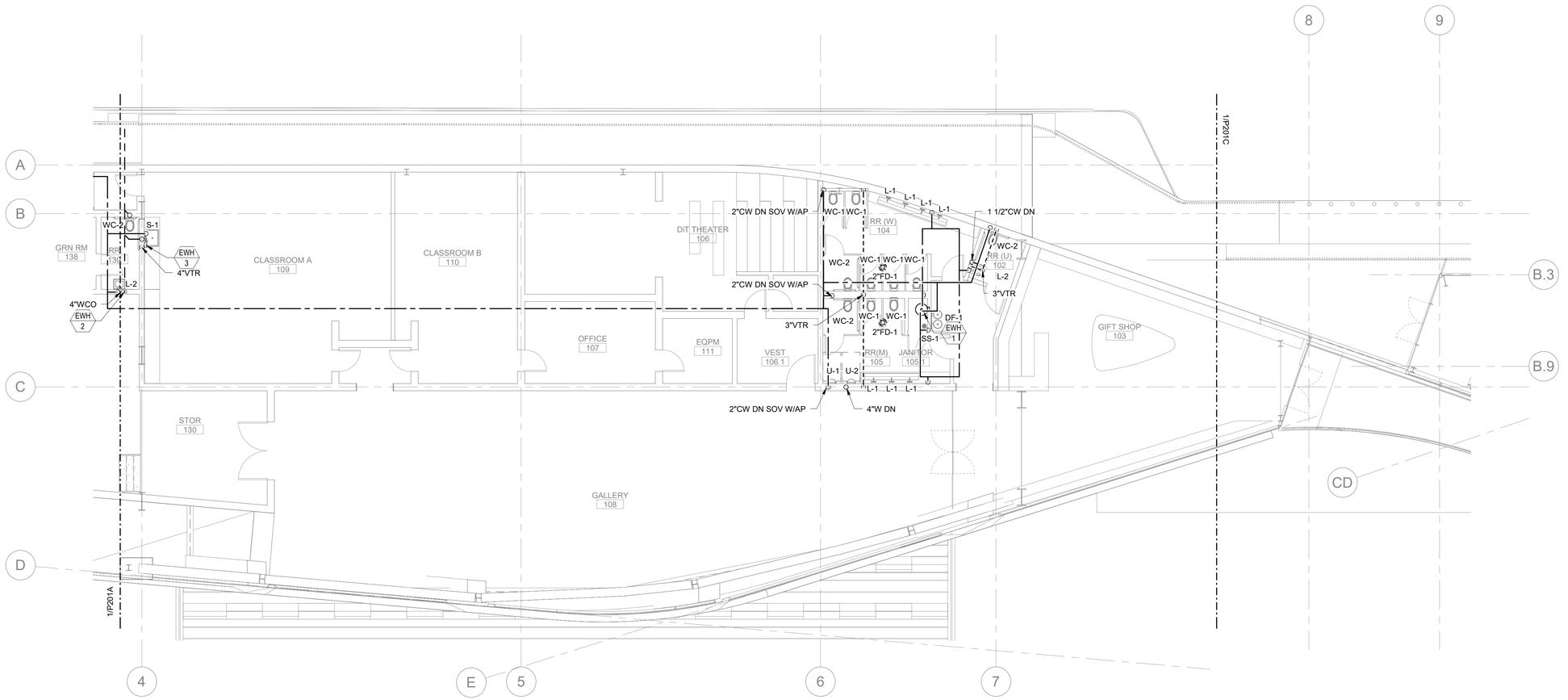

0 4' 8' 16'
SCALE: 1/8" = 1'-0"

N

NOT FOR CONSTRUCTION

09.AUG.2021

ba
belzberg architects
2321 MAIN STREET
SANTA MONICA, CA 90405
310.453.9611
www.belzbergarchitects.com

ARUP
Arup North America Ltd.
900 Wilshire Boulevard,
19th Floor
Los Angeles CA 90017
Tel: 310 578 4400
www.arup.com

#	DESCRIPTION	DATE

HOLOCAUST MUSEUM LA EXPANSION

100 THE GROVE DRIVE
LOS ANGELES, CA 90036

PLUMBING LEARNING CENTER GROUND FLOOR PLAN - NORTH

PROJECT NUMBER: 17009

P201B

08/09/21 19:14:01

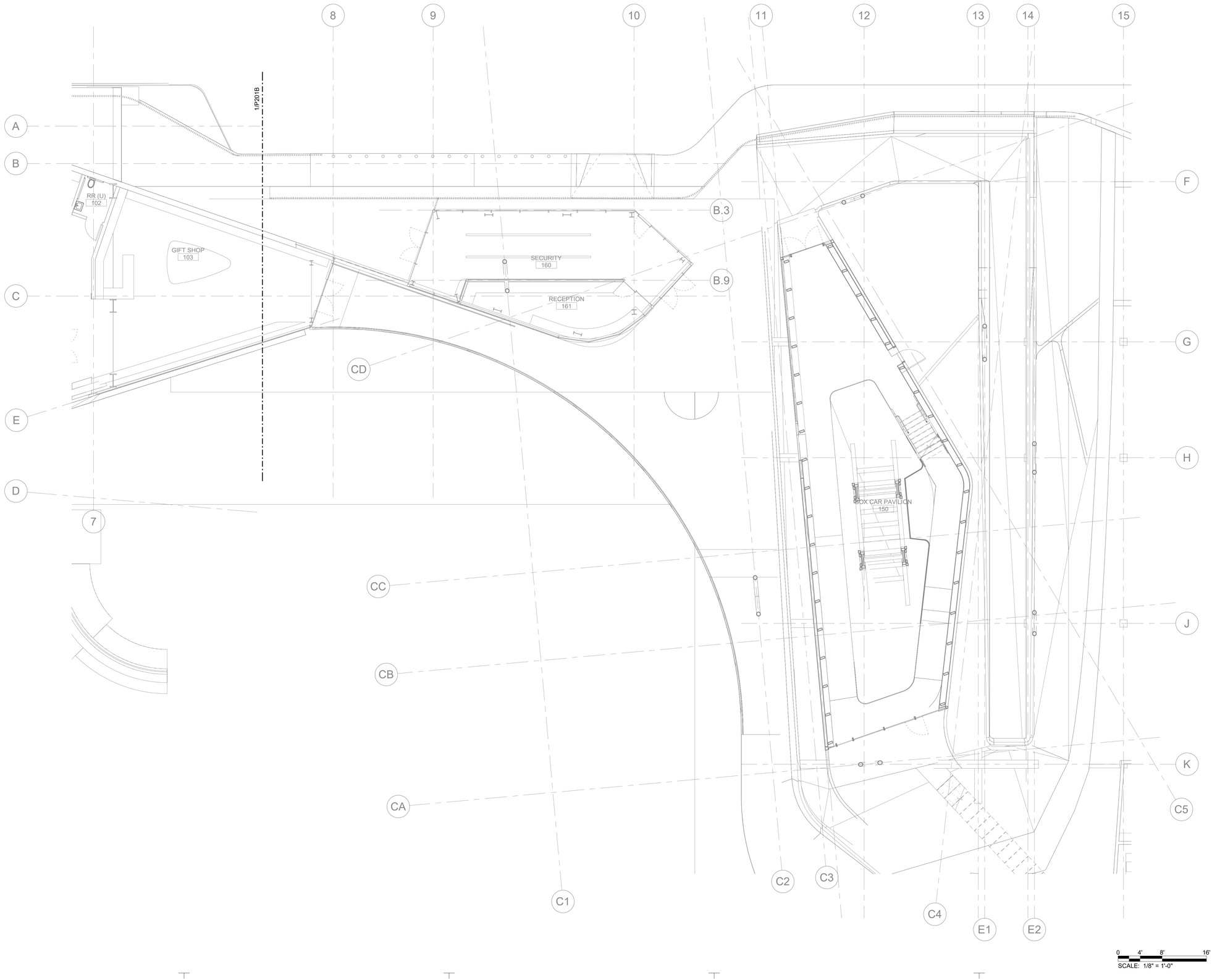

NOT FOR CONSTRUCTION

09.AUG.2021

ba
belzberg architects
2321 MAIN STREET
SANTA MONICA, CA 90405
310.453.9611
www.belzbergarchitects.com

ARUP
Arup North America Ltd.
900 Wilshire Boulevard,
19th Floor
Los Angeles CA 90017
Tel: 310 578 4400
www.arup.com

#	DESCRIPTION	DATE

HOLOCAUST
MUSEUM LA
EXPANSION

100 THE GROVE DRIVE
LOS ANGELES, CA 90036

PLUMBING BOXCAR
GROUND FLOOR PLAN

PROJECT NUMBER: 17009

P201C

08/09/21 19:14:05

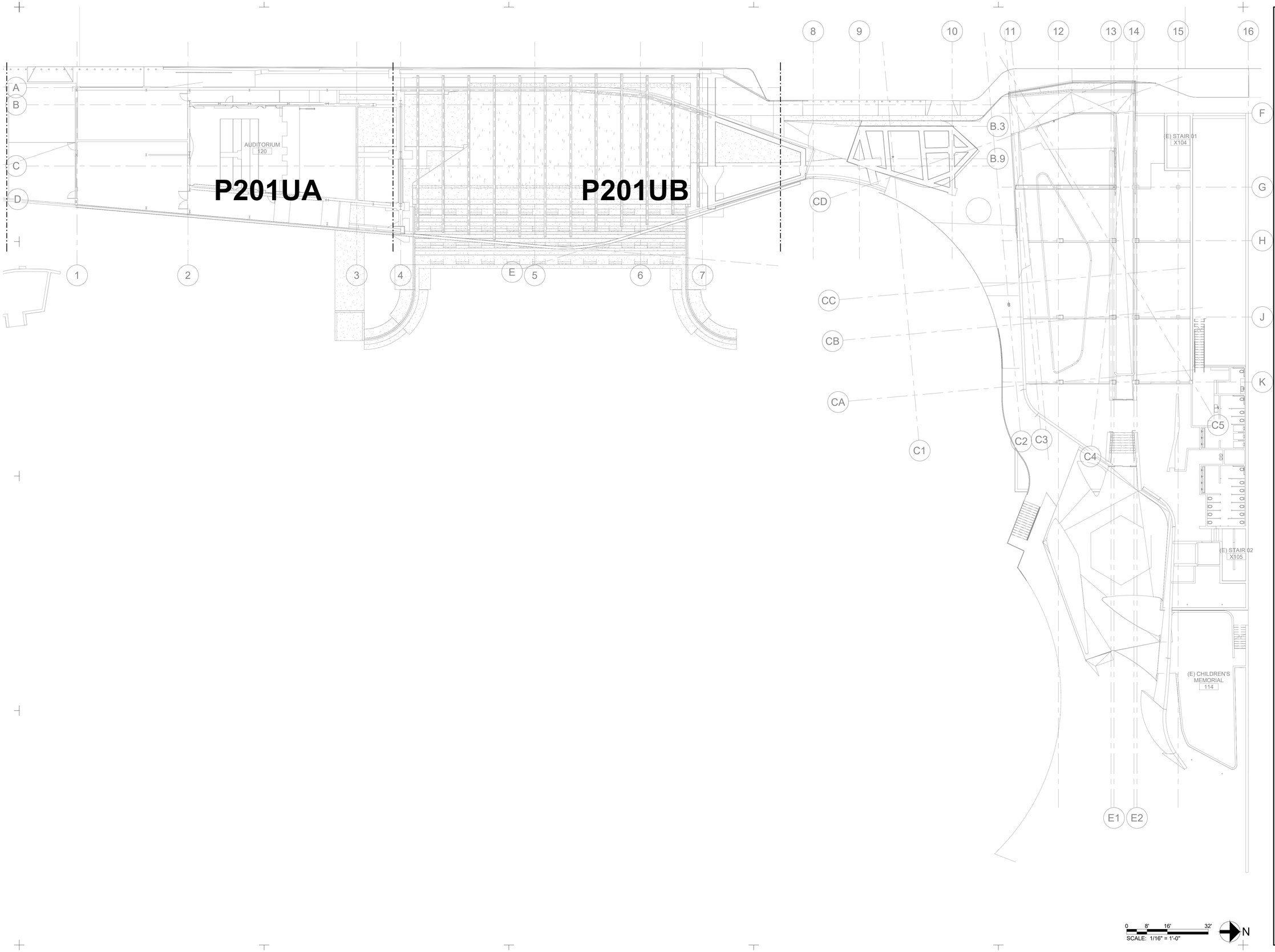

0 8' 16' 32'
SCALE: 1/16" = 1'-0"

N

NOT FOR CONSTRUCTION

09.AUG.2021

belzberg architects
2321 MAIN STREET
SANTA MONICA, CA 90405
310.453.9611
www.belzbergarchitects.com

ARUP
Arup North America Ltd.
900 Wilshire Boulevard,
19th Floor
Los Angeles CA 90017
Tel: 310 578 4400
www.arup.com

#	DESCRIPTION	DATE

HOLOCAUST MUSEUM LA EXPANSION

100 THE GROVE DRIVE
LOS ANGELES, CA 90036

PLUMBING UNDERGROUND PLAN - OVERALL

PROJECT NUMBER: 17009

P201U

08/09/21 19:14:09

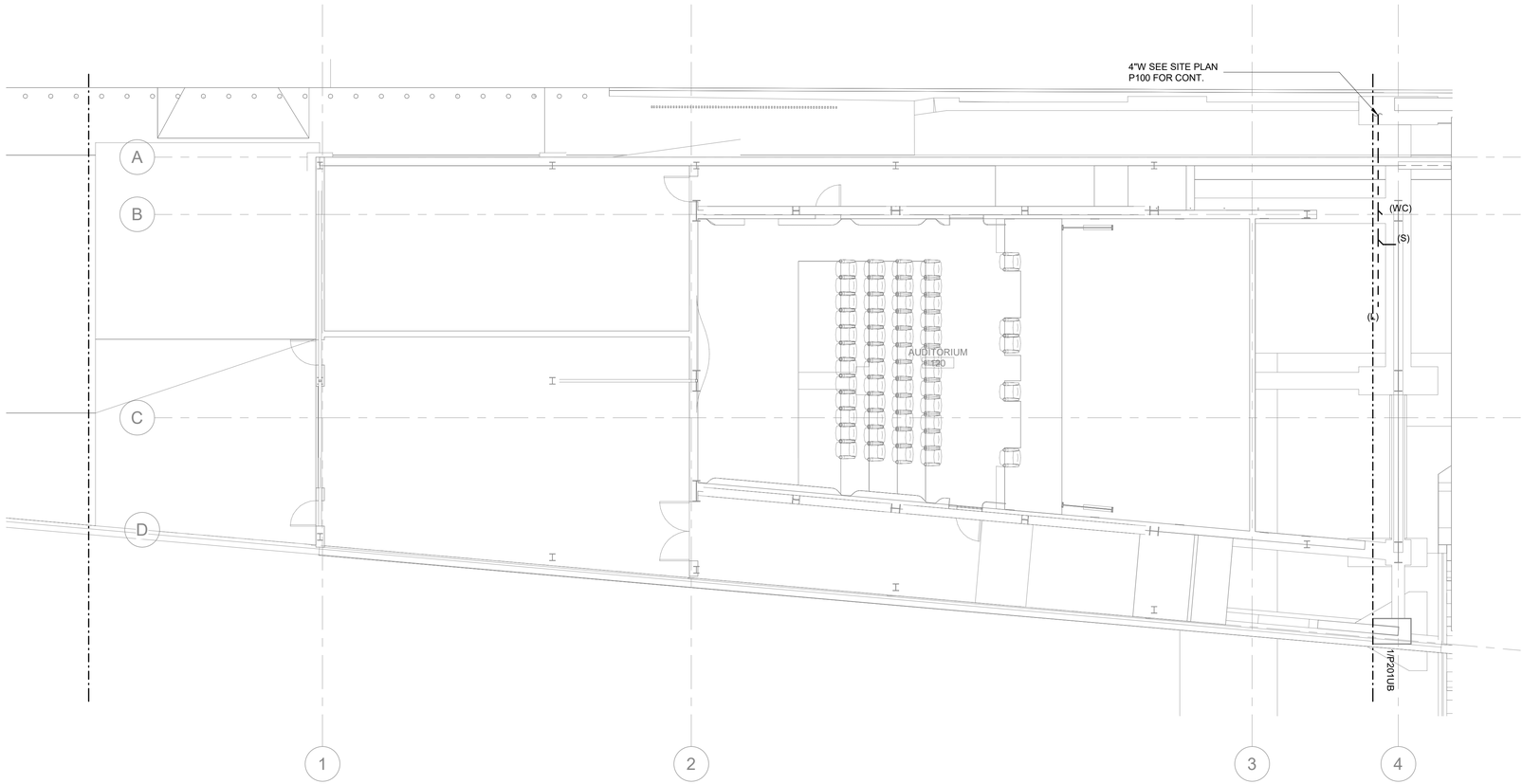

0 4' 8' 16'
SCALE: 1/8" = 1'-0"

N

NOT FOR CONSTRUCTION

09.AUG.2021

ba
belzberg architects
2321 MAIN STREET
SANTA MONICA, CA 90405
310.453.9611
www.belzbergarchitects.com

ARUP
Arup North America Ltd.
900 Wilshire Boulevard,
19th Floor
Los Angeles CA 90017
Tel: 310 578 4400
www.arup.com

#	DESCRIPTION	DATE

HOLOCAUST MUSEUM LA EXPANSION

100 THE GROVE DRIVE
LOS ANGELES, CA 90036

PLUMBING LEARNING CENTER UNDERGROUND PLAN - SOUTH

PROJECT NUMBER: 17009

P201UA

08/09/21 11:41:12

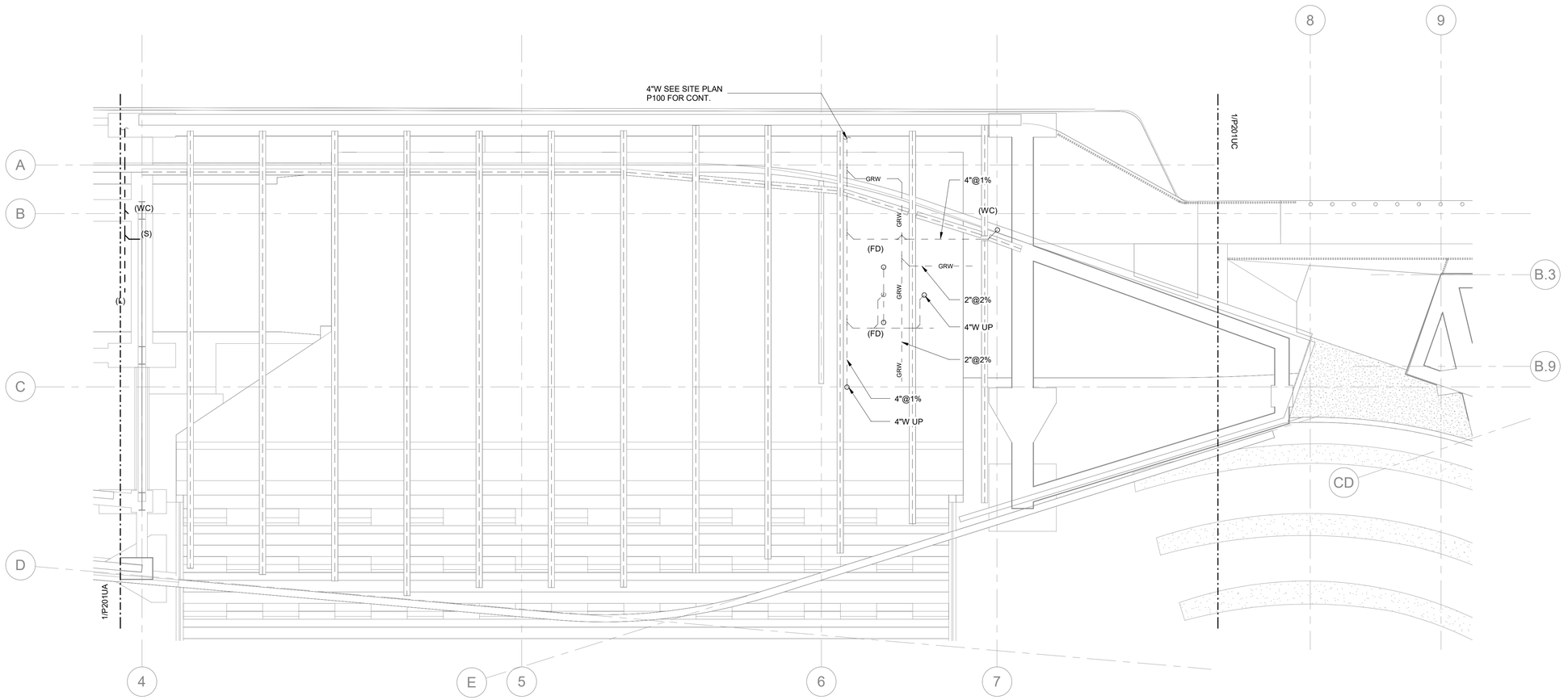

0 4' 8' 16'
SCALE: 1/8" = 1'-0"

N

NOT FOR CONSTRUCTION

09.AUG.2021

belzberg architects
2321 MAIN STREET
SANTA MONICA, CA 90405
310.453.9611
www.belzbergarchitects.com

ARUP
Arup North America Ltd.
900 Wilshire Boulevard,
19th Floor
Los Angeles CA 90017
Tel: 310 578 4400
www.arup.com

#	DESCRIPTION	DATE

HOLOCAUST MUSEUM LA EXPANSION

100 THE GROVE DRIVE
LOS ANGELES, CA 90036

PLUMBING LEARNING CENTER UNDERGROUND PLAN - NORTH

PROJECT NUMBER: 17009

P201UB

08/09/21 19:44:15

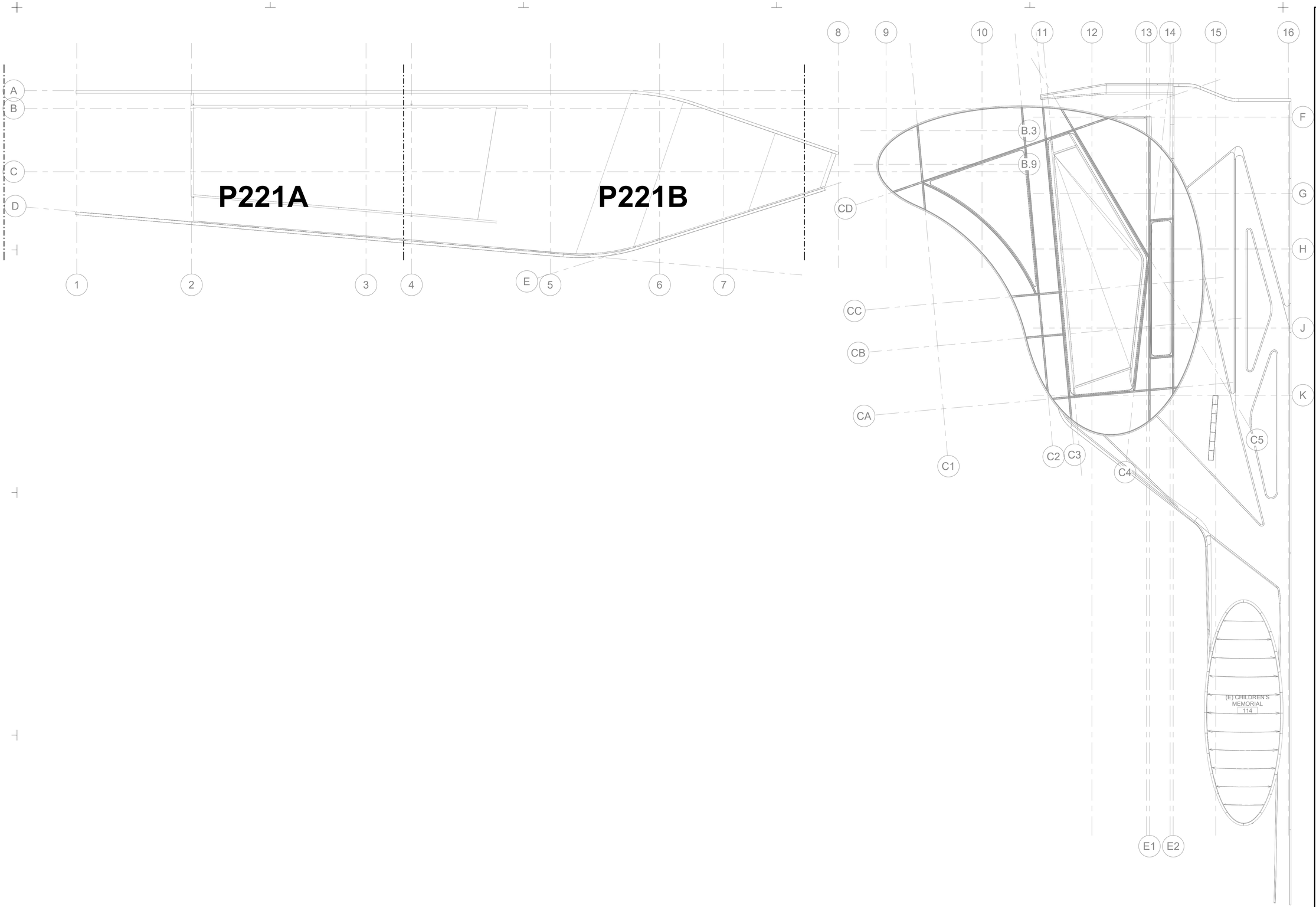

NOT FOR CONSTRUCTION

09.AUG.2021

ba
belzberg architects
2321 MAIN STREET
SANTA MONICA, CA 90405
310.453.9611
www.belzbergarchitects.com

ARUP
Arup North America Ltd.
900 Wilshire Boulevard,
19th Floor
Los Angeles CA 90017
Tel: 310 578 4400
www.arup.com

#	DESCRIPTION	DATE

HOLOCAUST MUSEUM LA EXPANSION

100 THE GROVE DRIVE
LOS ANGELES, CA 90036

PLUMBING ROOF LEVEL PLAN - OVERALL

PROJECT NUMBER: 17009

P221

08/09/21 19:14:18

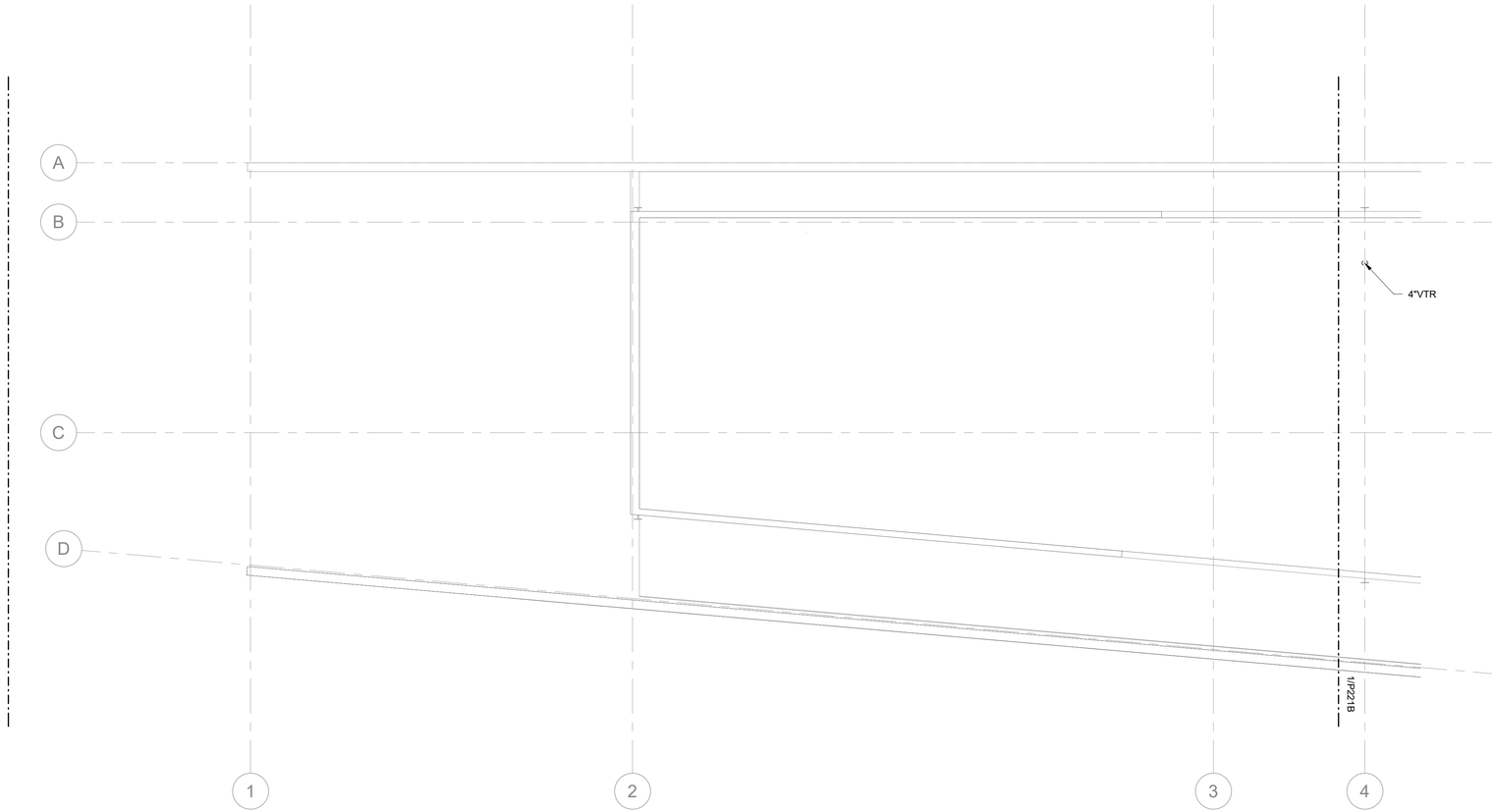

0 4' 8' 16'
SCALE: 1/8" = 1'-0"

N

NOT FOR CONSTRUCTION

09.AUG.2021

ba
belzberg architects
2321 MAIN STREET
SANTA MONICA, CA 90405
310.453.9611
www.belzbergarchitects.com

ARUP
Arup North America Ltd.
900 Wilshire Boulevard,
19th Floor
Los Angeles CA 90017
Tel: 310 578 4400
www.arup.com

#	DESCRIPTION	DATE

HOLOCAUST MUSEUM LA EXPANSION

100 THE GROVE DRIVE
LOS ANGELES, CA 90036

PLUMBING LEARNING CENTER ROOF LEVEL PLAN - SOUTH

PROJECT NUMBER: 17009

P221A

08/09/21 19:14:19

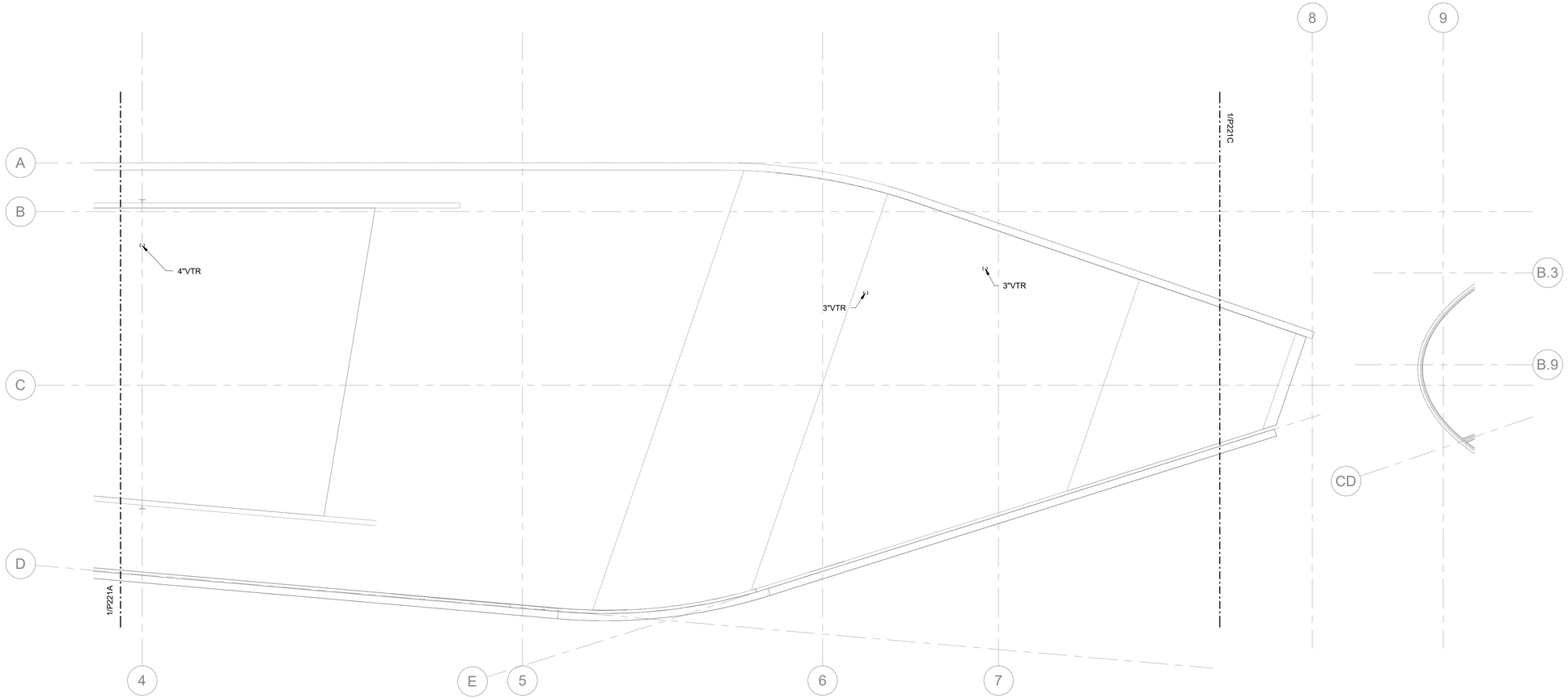

0 4' 8' 16'
SCALE: 1/8" = 1'-0"

N

NOT FOR CONSTRUCTION

09.AUG.2021

ba
belzberg architects
2321 MAIN STREET
SANTA MONICA, CA 90405
310.453.9611
www.belzbergarchitects.com

ARUP
Arup North America Ltd.
900 Wilshire Boulevard,
19th Floor
Los Angeles CA 90017
Tel: 310 578 4400
www.arup.com

#	DESCRIPTION	DATE

HOLOCAUST MUSEUM LA EXPANSION

100 THE GROVE DRIVE
LOS ANGELES, CA 90036

PLUMBING LEARNING CENTER ROOF LEVEL PLAN - NORTH

PROJECT NUMBER: 17009

P221B

08/09/21 19:14:20

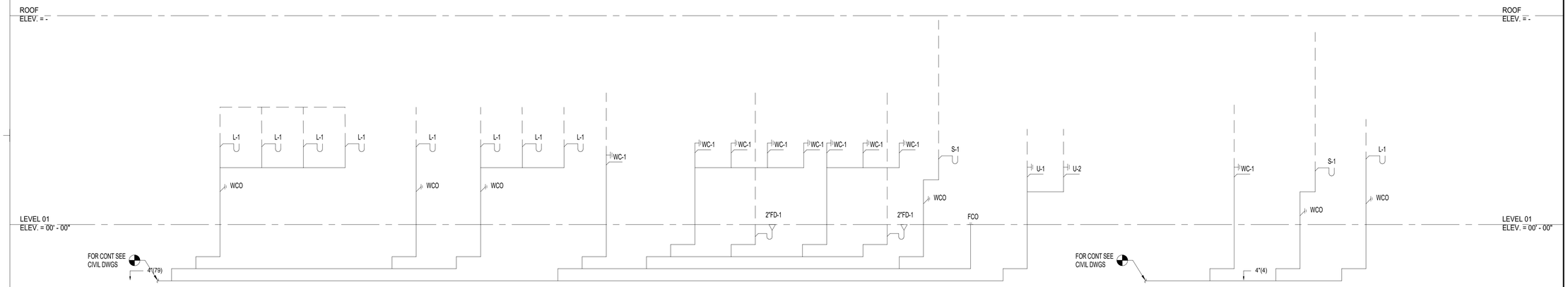

1 WASTE AND VENT RISER DIAGRAM

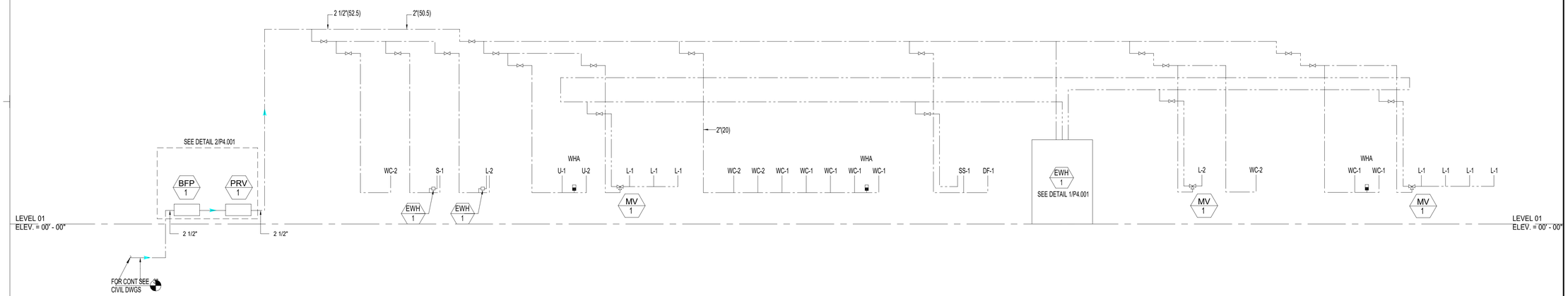

2 COLD AND HOT WATER RISER DIAGRAM

NOT FOR CONSTRUCTION

09.AUG.2021

belzberg architects

2321 MAIN STREET
SANTA MONICA, CA 90405
310.453.9611

www.belzbergarchitects.com

ARUP

Arup North America Ltd.
900 Wilshire Boulevard,
19th Floor
Los Angeles CA 90017
Tel: 310 578 4400
www.arup.com

#	DESCRIPTION	DATE

HOLOCAUST MUSEUM LA EXPANSION

100 THE GROVE DRIVE
LOS ANGELES, CA 90036

PLUMBING RISER DIAGRAMS

PROJECT NUMBER: 17009

P301

08/09/21 19:14:20

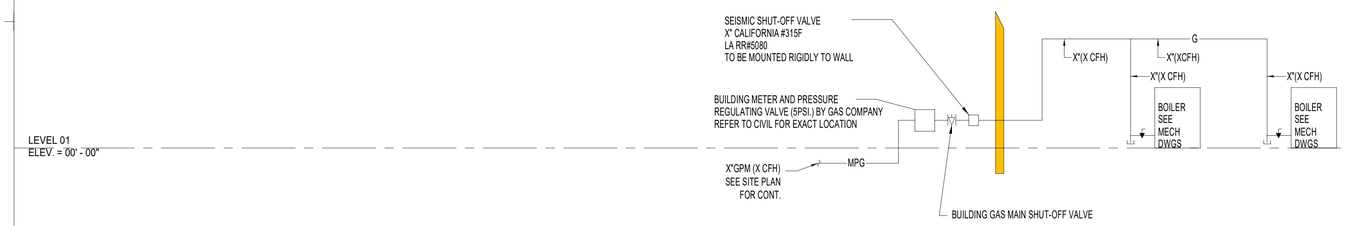

1 NATURAL GAS RISER DIAGRAM

TABLE 1216.2(1) CPC 2019 SCHEDULE 40 METALLIC PIPE (NFPA 54: TABLE 6.2(B))									GAS:	NATURAL		
									INLET PRESSURE:	LESS THAN 2 psi		
									PRESSURE DROP:	0.5 in. w.c.		
									SPECIFIC GRAVITY:	0.60		
NOMINAL (inch)	1/2	3/4	1	1 1/4	1 1/2	2	2 1/2	3	4	5	6	8
LENGHT (feet)	CAPACITY IN CUBIC FEET OF GAS PER HOUR (CFH)											
X	-	-	-	-	-	-	-	-	-	-	-	-

TDL FROM MAIN GAS REGULATOR TO FARTHEST BOILER - XX'

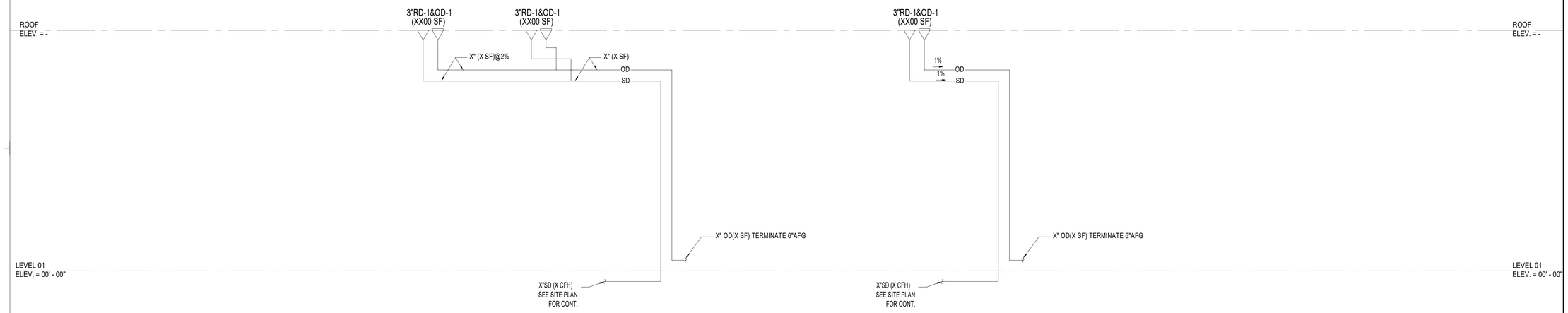

2 STORM AND OVERFLOW DRAIN RISER DIAGRAM

NOT FOR CONSTRUCTION

09.AUG.2021

ba
belzberg architects
2321 MAIN STREET
SANTA MONICA, CA 90405
310.453.9611
www.belzbergarchitects.com

ARUP
Arup North America Ltd.
900 Wilshire Boulevard,
19th Floor
Los Angeles CA 90017
Tel: 310 578 4400
www.arup.com

#	DESCRIPTION	DATE

HOLOCAUST
MUSEUM LA
EXPANSION

100 THE GROVE DRIVE
LOS ANGELES, CA 90036

PLUMBING RISER
DIAGRAMS

PROJECT NUMBER: 17009

P302

08/09/21 19:14:21

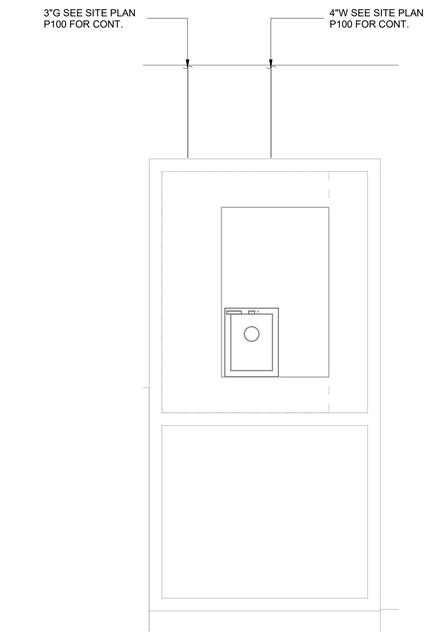

1 LEVEL 01 - BOILER ROOM
1/4" = 1'-0"

NOT FOR CONSTRUCTION

09.AUG.2021

ba
belzberg architects
2321 MAIN STREET
SANTA MONICA, CA 90405
310.453.9611
www.belzbergarchitects.com

ARUP
Arup North America Ltd.
900 Wilshire Boulevard,
19th Floor
Los Angeles CA 90017
Tel: 310 578 4400
www.arup.com

#	DESCRIPTION	DATE

HOLOCAUST MUSEUM LA EXPANSION

100 THE GROVE DRIVE
LOS ANGELES, CA 90036

PLUMBING ENLARGED PLAN

PROJECT NUMBER: 17009

P401

09/09/21 19:14:21

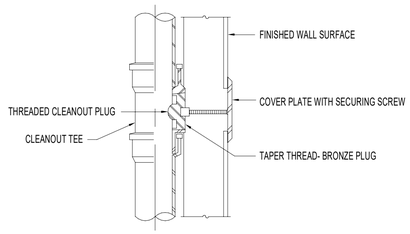

6 P401 WALL CLEANOUT DETAIL

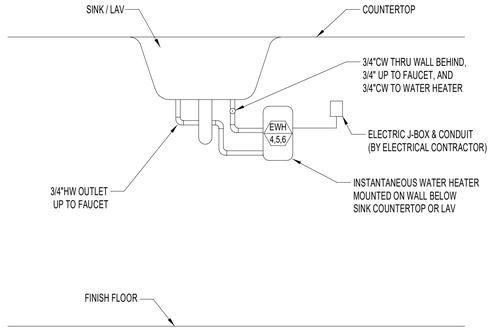

3 P401 INSTANTANEOUS WATER HEATER DETAIL (DUAL SUPPLY)

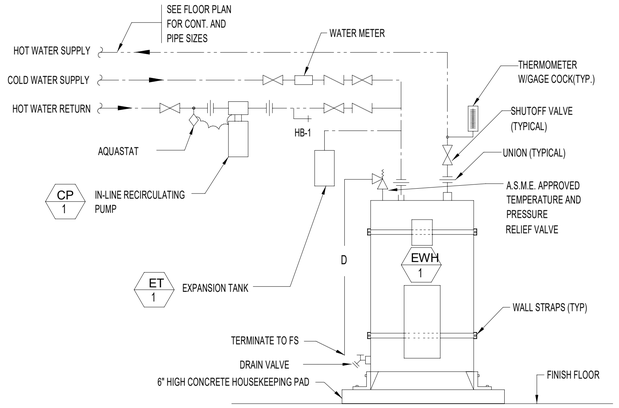

1 P401 ELECTRIC WATER HEATER DETAIL EWH-1

7 P401 CONDENSATE CONNECTION TO SINK TAILPIPE DETAIL

4 P401 INSTANTANEOUS WATER HEATER DETAIL (SINGLE SUPPLY)

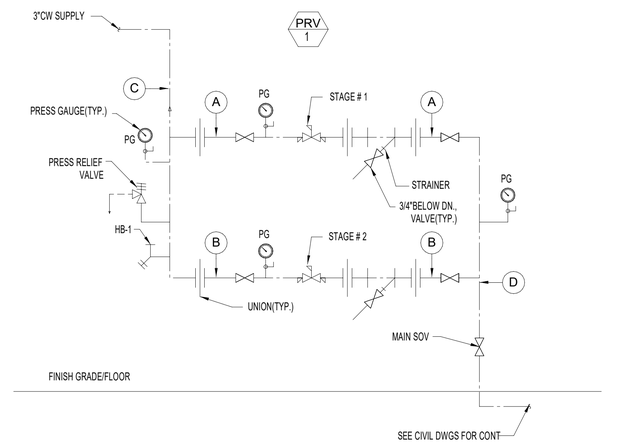

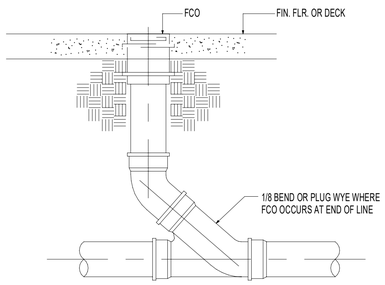

5 P401 FLOOR CLEANOUT DETAIL

2 P401 PRESSURE REDUCING VALVE PRV-1 DETAIL

PRV SCHEDULE

SYMBOL	SERVICE	LOCATION	STAGE	PRV SIZE	GPM	SET PRESS. PSI	PRESS. LOSS PSI	PIPE SIZES A	B	C	D	REMARKS
PRV	DOMESTIC WATER	OUTSIDE	# 1	1"	15	77	6	1"	-	3"	3"	WILKINS 510XLYSBR
			# 2	2"	65	75	7	-	2"			

8 P401 -

NOT FOR CONSTRUCTION

09.AUG.2021

belzberg architects
2321 MAIN STREET
SANTA MONICA, CA 90405
310.453.9611
www.belzbergarchitects.com

ARUP
Arup North America Ltd.
900 Wilshire Boulevard,
19th Floor
Los Angeles CA 90017
Tel: 310 578 4400
www.arup.com

#	DESCRIPTION	DATE

HOLOCAUST MUSEUM LA EXPANSION

100 THE GROVE DRIVE
LOS ANGELES, CA 90036

PLUMBING DETAILS

PROJECT NUMBER: 17009

P601

08/09/21 19:14:22

LIGHTING

SYMBOL	DESCRIPTION
	CEILING MOUNTED LIGHTING FIXTURE AND OUTLET BOX. - SHADED AREA FIXTURE ON EMERGENCY CIRCUIT
	WALL MOUNTED LIGHTING FIXTURE AND OUTLET BOX. - SHADED AREA FIXTURE ON EMERGENCY CIRCUIT
	CEILING/WALL EXIT LIGHT AND OUTLET BOX, LED TYPE, SELF CONTAINED, WITH BATTERY PACK. - SHADED AREA INDICATED ILLUMINATED FACE(S) - ARROW INDICATES DIRECTION
	EMERGENCY UNIT EQUIPMENT, 90 MINUTE BATTERY PACK, CHARGER AND TEST SWITCH

NOTE: SEE LIGHT FIXTURE SCHEDULE AND SPECIFICATIONS FOR COMPLETE FIXTURE DESCRIPTION.

WIRING DEVICES

SYMBOL	DESCRIPTION
$S^{T}_{a,b}$	LINE VOLTAGE SWITCH - LOWER CASE LETTER DENOTES SWITCHING ZONES - "T" DENOTES SWITCH TYPE: MC - MOMENTARY CONTACT D - DIMMER WP - WEATHER PROOF XP - EXPLOSION PROOF
$S_{a,b}$	LOW VOLTAGE SWITCH
DT	DUAL TECHNOLOGY OCCUPANCY SENSOR, CEILING MOUNTED
DT	DUAL TECHNOLOGY WALL SWITCH WITH INTEGRAL OCCUPANCY SENSOR
	PHOTOCELL CONTROLLER, CEILING MOUNTED
	PHOTOCELL CONTROLLER, WALL MOUNTED
LC	LIGHTING CONTACTOR
TC	TIME CLOCK
RC	REMOTE CONTROL SWITCH
	PUSH BUTTON
X +X"	LETTER DESIGNATION ON RECEPTACLES: A = ARC FAULT CIRCUIT INTERRUPTER G = GROUND FAULT CIRCUIT INTERRUPTER IG = ISOLATED GROUND WP = WEATHER PROOF WITH 'GFCI' S = SAFETY CT = ATOVE COUNTER CR = CRITICAL EQ = EQUIPMENT LS = LIFE SAFETY +X" = INDICATES MOUNTING HEIGHT SHADING = INDICATES RECEPTACLE ON EMERGENCY
	SIMPLEX RECEPTACLE WALL MOUNTED, +18" AFF, UON
	DUPLEX RECEPTACLE WALL MOUNTED, +18" AFF, UON
	QUAD RECEPTACLE WALL MOUNTED, +18" AFF, UON
	SPECIAL RECEPTACLE WALL MOUNTED, +18" AFF, UON
	SIMPLEX RECEPTACLE CEILING MOUNTED
	DUPLEX RECEPTACLE CEILING MOUNTED
	QUAD RECEPTACLE CEILING MOUNTED
	SPECIAL RECEPTACLE CEILING MOUNTED
	SIMPLEX RECEPTACLE FLUSH FLOOR MOUNTED
	DUPLEX RECEPTACLE FLUSH FLOOR MOUNTED
	QUAD RECEPTACLE FLUSH FLOOR MOUNTED
	SPECIAL RECEPTACLE FLUSH FLOOR MOUNTED
	POKE THROUGH FLOOR BOX WITH OUTLETS AS SPECIFIED
	ACCESS FLOOR BOX WITH OUTLETS AS SPECIFIED
	JUNCTION BOX RECESSED WALL MOUNTED
J	JUNCTION BOX RECESSED CEILING MOUNTED
J	JUNCTION BOX RECESSED FLUSH FLOOR MOUNTED

POWER

SYMBOL	DESCRIPTION
4x AF	SAFETY DISCONNECT SWITCH, 3 POLE UON A: 30A UNFUSED AF: 30A FUSED B: 60A UNFUSED BF: 60A FUSED C: 100A UNFUSED CF: 100A FUSED D: 200A UNFUSED DF: 200A FUSED E: 400A UNFUSED EF: 400A FUSED - '4x' DENOTES NEMA ENCLOSURE IF INDICATED
4x CB 225	DISCONNECT SWITCH - NUMERICAL DENOTES TRIP SIZE - '4x' DENOTES NEMA ENCLOSURE IF INDICATED
	MOTOR CONTROL EQUIPMENT AND CONNECTION TO CONTROLLED MOTOR(S). CONTROLLER IS MOUNTED AGAINST AN ADJACENT WALL OR OTHERWISE REMOTE FROM THE MOTOR. SEE MOTOR EQUIPMENT SCHEDULE(S) FOR CIRCUITING, TYPE OF CONTROL EQUIPMENT, QUANTITY OF MOTORS CONNECTED TO CONTROLLER, AND OTHER DETAILS. CONDUCTOR SIZE BETWEEN CONTROLLER AND MOTOR SHALL MATCH THE UPSTREAM OF THE CONTROLLER UNLESS NOTED OTHERWISE ON THE SCHEDULE.
	MOTOR CONTROL EQUIPMENT AND CONNECTION TO CONTROLLED MOTOR(S). CONTROLLER IS EITHER INTEGRAL TO THE EQUIPMENT OR MOUNTED DIRECTLY ONTO THE EQUIPMENT. SEE MOTOR EQUIPMENT SCHEDULE(S) FOR CIRCUITING, TYPE OF CONTROL EQUIPMENT, QUANTITY OF MOTORS CONNECTED TO CONTROLLER, AND OTHER DETAILS. CONDUCTOR SIZE BETWEEN CONTROLLER AND MOTOR SHALL MATCH THE UPSTREAM OF THE CONTROLLER UNLESS NOTED OTHERWISE ON THE SCHEDULE.
PB	PULLBOX
T4	TRANSFORMER, SEE SCHEDULE FOR RATING
ATS	AUTOMATIC TRANSFER SWITCH, SEE RISER DIAGRAM FOR RATING
R 6	RELAY - NUMERAL DENOTES NUMBER OF POLES
	SURFACE MOUNTED PANELBOARD
	FLUSH MOUNTED PANELBOARD
	FLOOR MOUNTED DISTRIBUTION/SWITCHBOARD

RACEWAYS

	CONDUIT AND WIRE, HASH MARKS INDICATE NUMBER OF WIRES. # HASH MARKS INDICATES 3#12+1#10N+ 1#12G IN 3/4" CONDUIT UON.
	CONDUIT AND WIRE HOMERUN. CONTINUOUS RUN TO MCC, PANELBOARD, SWITCHBOARD OR EQUIPMENT CABINET.
	CONDUIT AND WIRE RUN IN WALL OR CEILING SPACE, OR RUN EXPOSED IN UNFINISHED SPACE.
	CONDUIT AND WIRE RUN CONCEALED IN SLAB, UNDER SLAB OR UNDERGROUND
	CONDUIT AND WIRE RUN EXPOSED ON WALL OR CEILING IN FINISHED SPACE.
	FLEXIBLE CONNECTION
	CONDUIT TURNING UP
	CONDUIT TURNING DOWN
	CONDUIT CAPPED

MISCELLANEOUS

SYMBOL	DESCRIPTION
P380D	FEEDER SIZE, SEE FEEDER SCHEDULE
#	REFERENCE NOTE
E-3 A	DETAIL REFERENCE: - DETAIL DESIGNATION - SHEET NUMBER REFERENCE
EF 1	EQUIPMENT REFERENCE. COORDINATE EQUIPMENT WITH MECHANICAL/PLUMBING TRADES. SEE MECHANICAL/PLUMBING DRAWINGS FOR LOCATIONS.

SINGLE LINE DIAGRAM

SYMBOL	DESCRIPTION
PANEL	PANELBOARD, SEE PANEL SCHEDULE FOR RATING.
	FEEDER
BW	BUSWAY
LSI TRIP	MOLDED CASE CIRCUIT BREAKER: - 'TEXT' DENOTES CB ACCESSORIES ST, ET. GFP, EO, LSI TRIP FUNCTIONS - NUMERICAL DENOTES TRIP SIZE
GFP TRIP	LOW VOLTAGE DRAW OUT CIRCUIT BREAKER: - 'TEXT' DENOTES CB ACCESSORIES - NUMERICAL DENOTES TRIP SIZE
GFP FUSE	LOW VOLTAGE FUSE/SWITCH UNIT - 'TEXT' DENOTES FUSE ACCESSORIES ST, GFR, EO, LO, LOCK OUT PROVISIONS - NUMERICAL DENOTES FUSE SIZE
GFP FUSE	MEDIUM VOLTAGE DRAWOUT FUSE/SWITCH UNIT - 'TEXT' DENOTES FUSE ACCESSORIES - NUMERICAL DENOTES FUSE SIZE
52	MEDIUM VOLTAGE DRAW OUT CIRCUIT BREAKER WITH INTEGRAL TRIP UNIT
SA 12KV	INTERMEDIATE CLASS MOV SURGE ARRESTER - NUMERICAL DENOTES ARRESTOR RATING
ST TRIP	ENCLOSED CIRCUIT BREAKER - 'TEXT' DENOTES CB ACCESSORIES - NUMERICAL DENOTES TRIP SIZE
ST TRIP	ENCLOSED SAFETY DISCONNECT SWITCH - 'TEXT' DENOTES FUSE ACCESSORIES - NUMERICAL DENOTES SWITCH SIZE
	ENCLOSED FUSED DISCONNECT SWITCH - 'TEXT' DENOTES FUSE ACCESSORIES - NUMERICAL DENOTES SWITCH SIZE
N E ATS-# CONN AMPS L	AUTOMATIC TRANSFER SWITCH
ATS-# CONN AMPS	AUTOMATIC TRANSFER SWITCH W/BYPASS ISOLATION
G	GENERATOR
	MOTOR
KI	KEY INTERLOCK
51	RELAY NUMERICAL INDICATES TYPE
M	UTILITY METER
M V A	DIGITAL MULTIFUNCTION METER WITH CURRENT/POTENTIAL TRANSFORMER AS REQUIRED
M	DIGITAL ENERGY METER
200/5	CURRENT TRANSFORMER: - '200/5' DENOTES CT RATIO IF INDICATED
1	POTENTIAL TRANSFORMER: - NUMERICAL DENOTES QUANTITY OF FUSES
	INVERTER
	RECTIFIER
	BATTERY
	GROUND CONNECTION
	TRANSFORMER WITH PRIMARY AND SECONDARY CONNECTIONS AS INDICATED ON RISER DIAGRAM.

ABBREVIATIONS

SYMBOL	DESCRIPTION
A, AMP	AMPERE
AIC	AMPS INTERRUPTING CAPACITY
AC	ALTERNATING CURRENT
AFCI	ARC FAULT CIRCUIT INTERRUPTER
AFF	ABOVE FINISHED FLOOR
ATC	AUTOMATIC TEMPERATURE CONTROL
ATS	AUTOMATIC TRANSFER SWITCH
BAS	BUILDING AUTOMATION SYSTEM
BMS	BUILDING MANAGEMENT SYSTEM
BFG	BELOW FINISHED GRADE
C, CDT	CONDUIT
CB	CIRCUIT BREAKER
CH	CABINET HEIGHT
CKT	CIRCUIT
C.O., CO	CONDUIT ONLY
CONFIG.	CONFIGURATION
C	CENTERLINE
CONV	CONVENIENCE
CM	CONSTRUCTION MANAGER
DDC	DIGITAL DATA CONTROL
DWG	DRAWING
E.C.	ELECTRICAL CONTRACTOR
ELEC	ELECTRICAL
EM	EMERGENCY
EMT	ELECTRICAL METALLIC TUBING
E.O.	ELECTRICALLY OPERATED 'ON-OFF'
EQ	EQUAL
EWC	ELECTRIC WATER COOLER
FA	FIRE ALARM
FAI	FURNISH AND INSTALL
FBO	FURNISHED BY OTHERS
FS	FIRE SHUTTER/DOOR
FLA	FULL LOAD AMPS
FSD	FIRE SMOKE DAMPER
G, GND	GROUND
GEN	GENERATOR
GFCI	GROUND FAULT CIRCUIT INTERRUPTER
HC	HUNG CEILING
HID	HIGH INTENSITY DISCHARGE
HOA	HAND-OFF-AUTOMATIC
HP	HORSE POWER
IBEC	INSTALLED BY ELECTRICAL CONTRACTOR
IG	ISOLATED GROUND
JB,J	JUNCTION BOX
KVA	KILO VOLT- AMPERE
KW	KILO WATT
KWH	KILO WATT HOUR
LC	LOCK & COVER
LCP	LIGHTING CONTROL PANEL
LTG	LIGHTING
LV	LOW VOLTAGE
LVR	LOW VOLTAGE RELAY
MCC	MOTOR CONTROL CENTER
MCP	MOTOR CONTROL PANEL
MER	MECHANICAL EQUIPMENT ROOM
MFRR	MANUFACTURER
MIN	MINIMUM
MLO	MAIN LUGS ONLY
MSB	MAIN SWITCHBOARD
MTD	MOUNTED
N	NEUTRAL
NA, N/A	NOT APPLICABLE
NEMA	NATIONAL ELECTRICAL MANUFACTURERS ASSOCIATION
N.C.	NORMALLY CLOSED
NIC	NOT IN CONTRACT
#	NUMBER
N.O.	NORMALLY OPEN
NTS	NOT TO SCALE
OC	ON CENTER
P	POLES
PB	PULL BOX
PFC	POWER FACTOR CORRECTION
PH, ø	PHASE
PNL	PANEL
PVC	POLYVINYL CHLORIDE
PWR	POWER
RC	REHEAT COIL
RECPT, REC	RECEPTACLE
RM	ROOM
SG	SIGNAGE
SHT	SHEET
SPEC	SPECIFICATIONS
SPDT	SINGLE POLE DOUBLE THROW
SPST	SINGLE POLE SINGLE THROW
SS	SURGE SUPPRESSION
SW	SWITCH
SWBD	SWITCHBOARD
SWGR	SWITCHGEAR
TC	TIME CLOCK
TYP	TYPICAL
UG	UNDERGROUND
UON, U.O.N.	UNLESS OTHERWISE NOTED
UPS	UNINTERRUPTIBLE POWER SUPPLY
UNF	UNFUSED
V	VOLT
VA	VOLT-AMPERES
VPI	VACUUM PRESSURE IMPREGNATION
VT	VAPOR TIGHT
W	WATT
WP	WEATHER PROOF
XFMR	TRANSFORMER
XP	EXPLOSION PROOF

GENERAL NOTES

1. ALL MATERIALS AND WORKMANSHIP SHALL CONFORM TO THE CALIFORNIA CODE OF REGULATIONS (CCR) AND THE ELECTRICAL CODE BASED ON 2019 CALIFORNIA ELECTRICAL CODE (BASED ON 2017 NATIONAL ELECTRICAL CODE) WITH LA CITY AMENDMENTS, AND 2018 UCLA MEP CAMPUS STANDARDS.
2. ALL PANELS, SWITCHES, ETC. SHALL HAVE SUFFICIENT GUTTER SPACE AND LUGS IN COMPLIANCE WITH UL AND ELECTRICAL CODE REQUIREMENTS TO ACCOMMODATE CONDUCTORS SHOWN.
3. WHERE WIRE SIZES ARE INDICATED ON PLANS FOR INDIVIDUAL HOMERUNS, THE WIRE SIZE INDICATED SHALL APPLY TO THE COMPLETE CIRCUIT, UNLESS OTHERWISE NOTED.
4. CONTRACTOR SHALL VERIFY THE EXACT LOCATION OF MECHANICAL, PLUMBING AND ALL OTHER EQUIPMENT REQUIRING ELECTRICAL CONNECTION PRIOR TO ANY WORK, FIELD VERIFYING ALL CABLE LENGTHS PRIOR TO ORDER AND INSTALLATION.
5. CONTRACTOR SHALL EXTEND WIRING FROM ALL JUNCTION BOXES, SWITCHES, ETC. AND MAKE FINAL CONNECTION AS REQUIRED TO ALL BUILDING EQUIPMENT REQUIRING ELECTRICAL CONNECTIONS.
6. ALL MOUNTING HEIGHTS SHOWN ARE TO CENTER LINE OF OUTLET OR DEVICE AND SHALL APPLY UNLESS INDICATED OTHERWISE. REFER TO ARCHITECTURAL DOCUMENTS FOR FINAL SETTING OUT OF DEVICES.
7. DRAWINGS ARE DIAGRAMMATIC AND INDICATE GENERAL ARRANGEMENT OF SYSTEMS AND WORK INCLUDED. FOLLOW DRAWINGS IN LAYING OUT WORK AND CHECK DRAWINGS OF OTHER TRADES RELATING TO WORK TO VERIFY SPACE IN WHICH WORK WILL BE INSTALLED. MAINTAIN HEADROOM AND MINIMUM CODE REQUIRED WORKING CLEARANCES AT ALL TIMES.
8. LOCATION OF LOCAL WALL SWITCHES ARE SUBJECT TO MODIFICATIONS. AT OR NEAR DOORS INSTALL SWITCHES ON SIDE OPPOSITE TO DOOR HINGES. VERIFY FINAL HINGE LOCATION IN FIELD PRIOR TO ANY WORK.
9. CONTRACTOR SHALL COORDINATE THE LOCATION OF ALL WALL OUTLET BOXES FOR SWITCHES, STROBE/HORNS, STROBES, FIRE ALARM PULL STATIONS, RECEPTACLES ETC. WITH TACK BOARDS, CABINETS, FURNITURE, EQUIPMENT AND ETC. TO AVOID CONFLICT.
10. WHERE ELECTRIC MOTORS OR HEATERS ARE INSTALLED IN HUNG CEILING, PROVIDE DISCONNECT SWITCH IN HUNG CEILING WITHIN REACH FROM ACCESS POINT AND WITHIN SIGHT OF THE MOTOR.
11. PROVIDE APPROVED EXPANSION FITTINGS AND/OR LIQUID TIGHT FLEXIBLE CONDUITS WHERE RACEWAY CROSSES BUILDING EXPANSION/SEISMIC JOINTS.
12. PROVIDE PULL WIRE IN EACH RACEWAY RUN OVER 10 FEET IN LENGTH, IN WHICH PERMANENT WIRING IS NOT INSTALLED.
13. ELECTRICAL ROOMS HAVING A TRANSFORMER(S) RATED 112.5KVA OR ABOVE SHALL BE PROVIDED WITH 1-HOUR FIRE-RATED ENCLOSURE.
14. SEE MECHANICAL AND PLUMBING DRAWINGS AND SPECIFICATIONS FOR ADDITIONAL CONNECTION REQUIREMENTS TO CONTROL PANELS AND TRANSFORMERS, 120V FOR CONTROL SYSTEM, EP AND PE SWITCHES, TIME CLOCK, VALVES, STATS, RELAYS, VAV'S, FIRE SMOKE DAMPERS (FSD), DUCT SMOKE DETECTOR LOCATIONS, ETC. CONTRACTOR SHALL VERIFY FINAL CONTROL WIRING REQUIREMENTS WITH DIVISIONS 23 AND 25 PRIOR TO ANY WORK AND PROVIDE ALL NECESSARY WIRING, DEVICES AND CONNECTIONS AS REQUIRED.
15. ALL EXTERIOR ELECTRICAL DEVICES AND EQUIPMENT EXPOSED TO OUTSIDE ENVIRONMENT SHALL BE WEATHERPROOF TYPE, NEMA 3R.
16. LIGHTING, POWER, TELEPHONE AND COMMUNICATIONS OUTLETS SHALL NOT BE PLACED BACK-TO-BACK. OUTLET BOXES ON OPPOSITE SIDES OF THE WALL SHALL BE SEPARATED BY A MINIMUM HORIZONTAL DISTANCE OF 18" FOR NON-FIRE RATED WALLS AND 24" FOR FIRE RATED WALLS.
17. NO CONDUIT RUNS WILL BE ALLOWED IN CONCRETE SLAB UNLESS SPECIFICALLY NOTED. CONDUITS SHALL BE RUN ABOVE SUSPENDED CEILINGS WHERE POSSIBLE. EXPOSED CONDUIT (WHERE NO CEILING IS PROVIDED) RUNNING IN PUBLIC AREAS SHALL EXACTLY FOLLOW BUILDING LINES AND SHALL BE GROUPED TOGETHER AS MUCH AS POSSIBLE.
18. PROVIDE PULLBOXES WHEREVER NECESSARY TO FACILITATE PULLING OF CONDUCTORS. COORDINATE LOCATIONS OF BOXES WITH OTHER TRADES TO AVOID CONFLICT. PULLBOXES SHALL BE ACCESSIBLE. THE SIZE OF PULLBOX SHALL COMPLY WITH NEC REQUIREMENT.
19. FOR FIXTURES RECESSED IN HUNG CEILING, OUTLET BOXES SHALL BE ACCESSIBLE THROUGH OPENING THAT IS OPERATED BY REMOVAL OF FIXTURES.
20. WHERE MORE THAN ONE LIGHT SWITCH OCCURS AT SAME LOCATION, SWITCHES SHALL BE MOUNTED IN A MULTIPLE GANG BOX UNDER A SINGLE COVER PLATE. PLATES WITH MORE THAN (3) LIGHT SWITCHES SHALL BE LABELED TO INDICATE THE LIGHT FIXTURES CONTROLLED. SWITCH(ES) CONTROLLING LIGHTS IN EMERGENCY CIRCUIT SHALL BE IN A SEPARATE BOX OR GANGED BOXES UNDER THE SAME COVER PLATE AS THE OTHER SWITCHES.
21. DISCONNECT SWITCHES SHALL BE MOUNTED ON INDIVIDUAL SUPPORTS, OR OTHERWISE DIRECTLY ON EQUIPMENT, PROVIDED NO MODIFICATION TO EQUIPMENT IS NECESSARY.
22. ALL ELECTRIC MATERIAL SHALL BE LISTED BY "UL" FOR THE TYPE OF APPLICATION AND "UL" LABEL SHALL APPEAR ON ALL ELECTRICAL EQUIPMENT.
23. PROVIDE GREEN GROUNDING CONDUCTOR IN EACH RACEWAY INCLUDING CONDUITS, PLUG STRIPS, WIREMOLD. SIZE OF GROUNDING CONDUCTOR SHALL BE IN ACCORDANCE WITH NATIONAL ELECTRIC CODE ARTICLE 250.122.
24. PROVIDE 4" HIGH CONCRETE HOUSE KEEPING PAD UNDER EVERY FLOOR MOUNTED ELECTRICAL EQUIPMENT.
25. REFER TO ARCHITECTURAL DRAWINGS FOR ALL CEILING HEIGHTS.
26. NO EQUIPMENT, J-BOX, ETC. REQUIRING ACCESS SHALL BE LOCATED IN HARD CEILING UNLESS ACCESS PANEL IS PROVIDED. COORDINATE WITH ARCHITECT UNDER THIS EXEMPTION.
27. QUANTITY OF CONDUCTORS ARE SHOWN ON THE HOMERUNS ONLY. CONTRACTOR IS RESPONSIBLE FOR PROVIDING THE REQUIRED NUMBER OF CONDUCTORS TO EQUIPMENT, DEVICES, ETC.
28. THE CONTRACTOR SHALL COORDINATE THEIR WORK WITH OTHER TRADES AT THE SITE. ANY COSTS TO INSTALL WORK TO ACCOMPLISH SAID COORDINATION WHICH DIFFERS FROM THE WORK AS SHOWN ON THE DRAWINGS SHALL BE INCURRED BY THE CONTRACTOR. ANY DISCREPANCIES, AMBIGUITIES OR CONFLICTS SHALL BE BROUGHT TO THE ATTENTION OF THE ENGINEER PRIOR TO PROCUREMENT. ANY SUCH CONFLICTS NOT CLARIFIED PRIOR TO PROCUREMENT SHALL BE SUBJECT TO INTERPRETATION OF THE ENGINEER AT NO ADDITIONAL COST TO THE OWNER.
29. CONTRACTOR SHALL THOROUGHLY REVIEW ALL ENGINEERING DRAWINGS TO FULLY UNDERSTAND THE IMPLICATIONS OF THE WORK OF OTHERS AND TO COORDINATE THE INSTALLATION AND SEQUENCING OF WORKS.
30. REFER TO SINGLE LINE DIAGRAM AND FEEDER SCHEDULES FOR CONDUIT AND CONDUCTOR SIZE TO PANELS, ETC. CONDUIT RUNS MAY NOT BE SHOWN ON DRAWINGS, BUT ARE PART OF THIS CONTRACT.
31. PROVIDE ADDITIONAL GROUND WIRE CONNECTED TO THE ISOLATED GROUND BUS WITHIN THE 120/208V PANELBOARD FEEDING THE CIRCUIT FOR ALL I.G. CIRCUITS. THE ISOLATED GROUND SYSTEM CONDUCTOR SHALL BE ORIGINATED AT EACH STEP-DOWN TRANSFORMER GROUNDING LUG AND EXTENDED THROUGH DEDICATED I.G. BUSES WITHIN DISTRIBUTION BOARDS, PANELBOARDS AND UP TO I.G. TERMINATION POINT AT I.G. TYPE RECEPTACLES. REFER TO FEEDER SCHEDULE FOOTNOTES ON SHEET E500 FOR ADDITIONAL INFORMATION.
32. ALL ELECTRICAL POWER, LIGHTING AND SIGNAL CONTROL WIRING RUN ABOVE GROUND SHALL BE IN METALLIC CONDUIT UNLESS NOTED OTHERWISE.
33. FUSES SHALL BE PROVIDED WITH REJECTION TYPE FUSE HOLDERS.
34. ALL SWITCHBOARDS, PANELBOARDS, BREAKERS AND FUSES SHALL BE FULLY RATED. SERIES RATING IS NOT PERMITTED.
35. ALL TERMINATIONS SHALL BE 75°C.
36. SEE SECURITY DRAWING FOR ALL CONDUITS, CABINETS, J-BOXES, 120V EMERGENCY POWER AND OTHER REQUIREMENTS.
37. ALL CONDUCTORS BOTH LOW AND LINE VOLTAGE FOR POWER AND SIGNAL SHALL BE INSTALLED IN CODE APPROVED RACEWAY.
38. WHERE MULTIPLE HOMERUNS ARE SHOWN FOR THE SAME CIRCUIT, CONDUCTORS MAY BE COMBINED (IN JUNCTION BOX) WHERE CONVENIENT DUE TO ROUTING ARRANGEMENTS, THEN RUN TO PANELBOARD.
39. CONTRACTOR SHALL PROVIDE DETAILED SHOP DRAWINGS OF ALL OVERHEAD AND UNDERGROUND CONDUIT ROUTING PRIOR TO INSTALLATION. SHOP DRAWINGS SHALL BE FULLY COORDINATED WITH ALL TRADES AND SHALL BE ISSUED ONLY AFTER ALL TRADES HAVE SIGNED OFF. PROVIDE DESIGNATED ROUTING ZONES FOR BRANCH CIRCUIT CONDUITS.
40. CONTRACTOR SHALL SUBMIT CALCULATIONS FOR EQUIPMENT SUPPORTS, ANCHORAGE AND VIBRATION ISOLATORS FOR APPROVAL. ALL CALCULATIONS SHALL BE PREPARED, STAMPED AND SIGNED BY A PROFESSIONAL STRUCTURAL ENGINEER REGISTERED IN THE STATE.
41. ELECTRICAL CONTRACTOR SHALL COORDINATE WITH STRUCTURAL CONTRACTOR FOR ALL CONCRETE WALL OR FLOOR PENETRATIONS. HOLES FOR CONDUIT IN CONCRETE WALLS OR FLOORS SHALL BE PLACED IN SLEEVES. IF SLEEVES ARE NOT PLACED, CUTTING HOLES IN STRUCTURAL ELEMENTS SHALL BE DRILLED WITH CORE DRILLING EQUIPMENT ONLY AFTER THE REINFORCEMENT INSIDE THE WALL HAS BEEN LOCATED. PROVIDE DETAILED INFORMATION TO THE STRUCTURAL ENGINEER PRIOR TO EXECUTION INCLUDING PROPOSED LOCATION AND DIMENSIONED LOCATION OF REINFORCEMENT OF THE WALLS OR FLOORS. CORE DRILLING MAY NOT BE PERMISSIBLE IN CERTAIN CIRCUMSTANCES OR COULD REQUIRE STRENGTHENING OF STRUCTURAL ELEMENTS.
42. ALL ELECTRICAL EQUIPMENT SHALL BE LOCATED IN DEDICATED SPACES AND PROTECTED FROM DAMAGE AS REQUIRED BY CEC 110.26(F). NO PIPING, DUCTS OR EQUIPMENT FOREIGN TO ELECTRICAL EQUIPMENT SHALL BE PERMITTED TO BE LOCATED WITHIN THE DEDICATED SPACE ABOVE THE ELECTRICAL EQUIPMENT.
43. TYPE OF CONDUITS USED SHALL BE AS STATED IN THE SPECIFICATIONS AND AS FOLLOWS:
    A. RIGID STEEL CONDUIT SHALL BE USED WHERE EXPOSED TO WEATHER OR PHYSICAL DAMAGE, REQUIRED BY CODE, IN CORROSIVE AREAS.
    B. EMT CONDUIT SHALL BE CONCEALED IN DRY LOCATIONS AS IN STUD PARTITIONS AND FURRED CEILING SPACES. EXPOSED INSTALLATION IS ACCEPTABLE IN ELECTRICAL ROOMS ONLY, AREAS NOT EXPOSED TO WEATHER/CORROSION AND PHYSICAL DAMAGE, AND FOR 7'-6" MOUNTING ABOVE FINISHED FLOOR.
    C. FLEXIBLE STEEL CONDUIT SHALL BE USED IN DRY LOCATIONS, WHERE REQUIRED BY CODE, FOR CONNECTION TO RECESSED LIGHT FIXTURES, MOTORS, TRANSFORMERS, AND VIBRATING EQUIPMENT.
    D. LIQUID TIGHT FLEXIBLE CONDUIT SHALL BE INSTALLED IN LIEU OF THE FLEXIBLE STEEL WHERE REQUIRED BY CODE, EXPOSED TO WEATHER, AND IN DAMP OR WET LOCATIONS.
44. RIGID NONMETALLIC CONDUITS, PVC SCHEDULE 40 SHALL BE USED WHERE IT IS ROUTED UNDERGROUND OR IN CONCRETE SLAB.
45. PVC COATED STEEL CONDUITS SHALL BE USED IN LIEU OF RIGID NONMETALLIC CONDUIT FOR ALL CONDUIT PENETRATIONS THROUGH THE EXTERIOR WALL AND BENDS IN CONDUITS 2" AND LARGER.
46. METAL-CLAD (MC) CABLES SHALL BE USED IN LIEU OF CONDUIT AND WIRE FOR FINAL CONNECTION TO LIGHT FIXTURES AND RECEPTACLES IN AREAS/ROOMS WITH DROP CEILING (ACOUSTICAL CEILING TILE). ALL WIRING FOR BRANCH CIRCUITS DISTRIBUTED THROUGHOUT THE BUILDING SHALL BE RUN IN CONDUIT EXCEPT FOR FINAL TERMINATIONS TO FIXTURES AND RECEPTACLES OUTLETS WHERE AN MC CABLE MAY BE USED TO EXTEND CONNECTION FROM J-BOX TO OUTLETS AS DESCRIBED ABOVE.
47. OUTDOOR LIGHTING SYSTEMS SHALL BE DESIGNED AND INSTALLED TO COMPLY WITH ALL OF THE FOLLOWING:
    A. THE MINIMUM REQUIREMENTS IN CALIFORNIA ENERGY CODE FOR LIGHTING ZONES 1-4,
    B. BACKLIGHT, UPLIGHT AND GLARE (BUG) RATINGS AS DEFINED IN IESNA TM-15-11,
    C. ALLOWABLE BUG RATINGS NOT EXCEEDING THOSE SHOWN IN ON CALGREEN TABLE 5.106.8.
48. REFER TO OTHER CONSULTANT DRAWINGS FOR SCOPE OF WORK.

ELECTRICAL DRAWING LIST

DWG NO.	DRAWING TITLE
E000	ELECTRICAL NOTES, SYMBOLS, & ABBREVIATIONS
E100	ELECTRICAL SITE PLAN
E201	ELECTRICAL GROUND FLOOR PLAN - OVERALL
E201A	ELECTRICAL LEARNING CENTER GROUND FLOOR PLAN - SOUTH
E201B	ELECTRICAL LEARNING CENTER GROUND FLOOR PLAN - NORTH
E201C	ELECTRICAL BOXCAR GROUND FLOOR PLAN
E202	ELECTRICAL MEZZANINE FLOOR PLAN - OVERALL
E202A	ELECTRICAL LEARNING CENTER MEZZ FLOOR PLAN - SOUTH
E221	ELECTRICAL ROOF LEVEL PLAN - OVERALL
E221A	ELECTRICAL LEARNING CENTER ROOF LEVEL PLAN - SOUTH
E221B	ELECTRICAL LEARNING CENTER ROOF LEVEL PLAN - NORTH
E221C	ELECTRICAL BOXCAR ROOF LEVEL PLAN
E401	ELECTRICAL ENLARGED PLANS
E501	ELECTRICAL SINGLE LINE DIAGRAM
EL301	ELECTRICAL LIGHTING GROUND FLOOR CEILING PLAN - OVERALL
EL301A	ELECTRICAL LIGHTING LEARNING CENTER GROUND FLOOR CEILING PLAN - SOUTH
EL301B	ELECTRICAL LIGHTING LEARNING CENTER GROUND FLOOR CEILING PLAN - NORTH
EL301C	ELECTRICAL LIGHTING BOXCAR GROUND FLOOR CEILING PLAN
EL302	ELECTRICAL LIGHTING MEZZANINE CEILING PLAN - OVERALL
EL302A	ELECTRICAL LIGHTING LEARNING CENTER MEZZANINE CEILING PLAN - SOUTH

NOT FOR CONSTRUCTION

09.AUG.2021

belzberg architects
2321 MAIN STREET
SANTA MONICA, CA 90405
310.453.9611
www.belzbergarchitects.com

ARUP
Arup North America Ltd.
900 Wilshire Boulevard,
19th Floor
Los Angeles CA 90017
Tel: 310 578 4400
www.arup.com

#	DESCRIPTION	DATE

HOLOCAUST MUSEUM LA EXPANSION

100 THE GROVE DRIVE
LOS ANGELES, CA 90036

ELECTRICAL NOTES, SYMBOLS, & ABBREVIATIONS

PROJECT NUMBER: 17009

E000

08/09/21 19:11:12

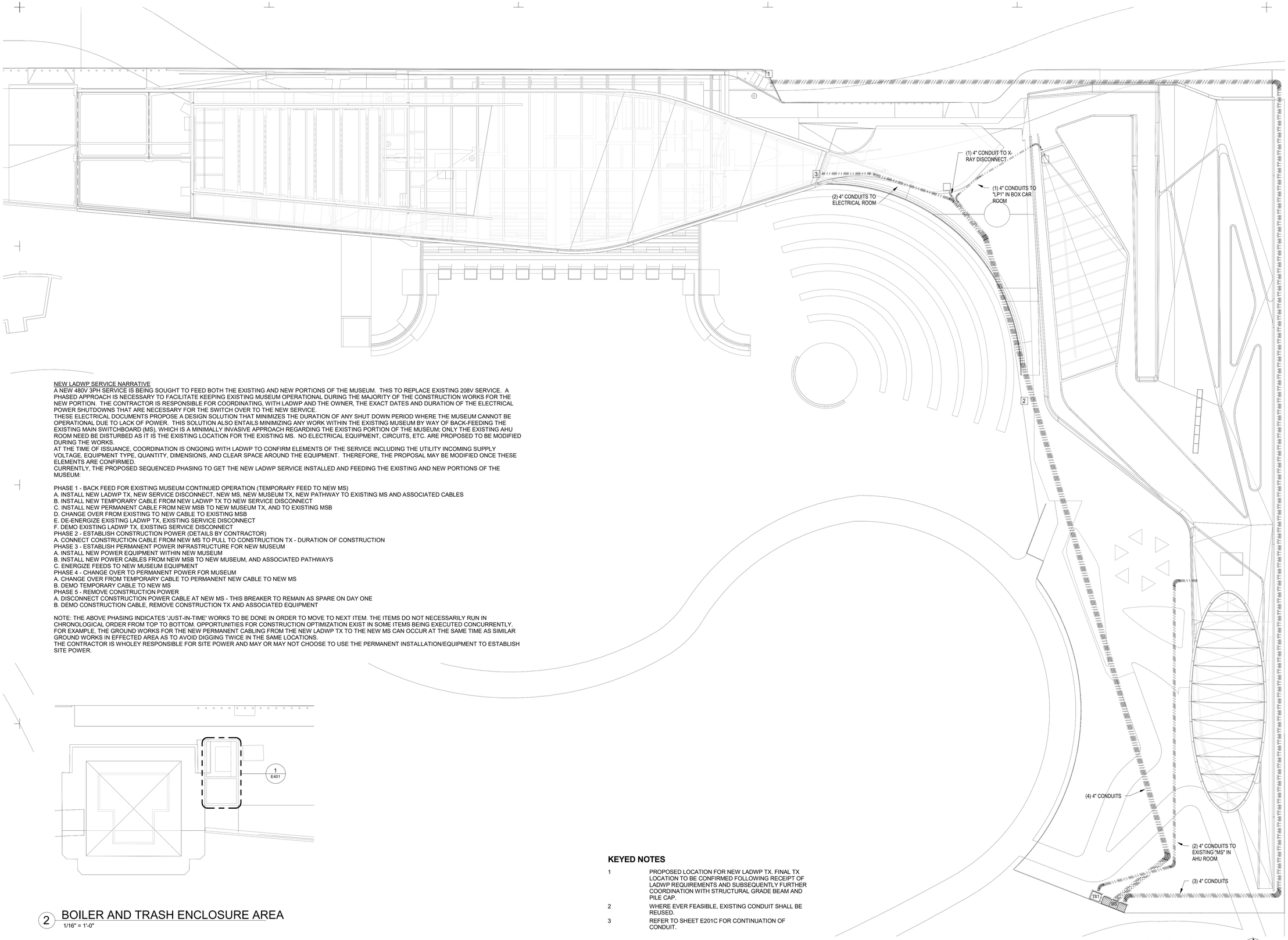

NEW LADWP SERVICE NARRATIVE

A NEW 480V 3PH SERVICE IS BEING SOUGHT TO FEED BOTH THE EXISTING AND NEW PORTIONS OF THE MUSEUM. THIS TO REPLACE EXISTING 208V SERVICE. A PHASED APPROACH IS NECESSARY TO FACILITATE KEEPING EXISTING MUSEUM OPERATIONAL DURING THE MAJORITY OF THE CONSTRUCTION WORKS FOR THE NEW PORTION. THE CONTRACTOR IS RESPONSIBLE FOR COORDINATING, WITH LADWP AND THE OWNER, THE EXACT DATES AND DURATION OF THE ELECTRICAL POWER SHUTDOWNS THAT ARE NECESSARY FOR THE SWITCH OVER TO THE NEW SERVICE.
THESE ELECTRICAL DOCUMENTS PROPOSE A DESIGN SOLUTION THAT MINIMIZES THE DURATION OF ANY SHUT DOWN PERIOD WHERE THE MUSEUM CANNOT BE OPERATIONAL DUE TO LACK OF POWER. THIS SOLUTION ALSO ENTAILS MINIMIZING ANY WORK WITHIN THE EXISTING MUSEUM BY WAY OF BACK-FEEDING THE EXISTING MAIN SWITCHBOARD (MS), WHICH IS A MINIMALLY INVASIVE APPROACH REGARDING THE EXISTING PORTION OF THE MUSEUM; ONLY THE EXISTING AHU ROOM NEED BE DISTURBED AS IT IS THE EXISTING LOCATION FOR THE EXISTING MS. NO ELECTRICAL EQUIPMENT, CIRCUITS, ETC. ARE PROPOSED TO BE MODIFIED DURING THE WORKS.
AT THE TIME OF ISSUANCE, COORDINATION IS ONGOING WITH LADWP TO CONFIRM ELEMENTS OF THE SERVICE INCLUDING THE UTILITY INCOMING SUPPLY VOLTAGE, EQUIPMENT TYPE, QUANTITY, DIMENSIONS, AND CLEAR SPACE AROUND THE EQUIPMENT. THEREFORE, THE PROPOSAL MAY BE MODIFIED ONCE THESE ELEMENTS ARE CONFIRMED.
CURRENTLY, THE PROPOSED SEQUENCED PHASING TO GET THE NEW LADWP SERVICE INSTALLED AND FEEDING THE EXISTING AND NEW PORTIONS OF THE MUSEUM:

PHASE 1 - BACK FEED FOR EXISTING MUSEUM CONTINUED OPERATION (TEMPORARY FEED TO NEW MS)
A. INSTALL NEW LADWP TX, NEW SERVICE DISCONNECT, NEW MS, NEW MUSEUM TX, NEW PATHWAY TO EXISTING MS AND ASSOCIATED CABLES
B. INSTALL NEW TEMPORARY CABLE FROM NEW LADWP TX TO NEW SERVICE DISCONNECT
C. INSTALL NEW PERMANENT CABLE FROM NEW MSB TO NEW MUSEUM TX, AND TO EXISTING MSB
D. CHANGE OVER FROM EXISTING TO NEW CABLE TO EXISTING MSB
E. DE-ENERGIZE EXISTING LADWP TX, EXISTING SERVICE DISCONNECT
F. DEMO EXISTING LADWP TX, EXISTING SERVICE DISCONNECT
PHASE 2 - ESTABLISH CONSTRUCTION POWER (DETAILS BY CONTRACTOR)
A. CONNECT CONSTRUCTION CABLE FROM NEW MS TO PULL TO CONSTRUCTION TX - DURATION OF CONSTRUCTION
PHASE 3 - ESTABLISH PERMANENT POWER INFRASTRUCTURE FOR NEW MUSEUM
A. INSTALL NEW POWER EQUIPMENT WITHIN NEW MUSEUM
B. INSTALL NEW POWER CABLES FROM NEW MSB TO NEW MUSEUM, AND ASSOCIATED PATHWAYS
C. ENERGIZE FEEDS TO NEW MUSEUM EQUIPMENT
PHASE 4 - CHANGE OVER TO PERMANENT POWER FOR MUSEUM
A. CHANGE OVER FROM TEMPORARY CABLE TO PERMANENT NEW CABLE TO NEW MS
B. DEMO TEMPORARY CABLE TO NEW MS
PHASE 5 - REMOVE CONSTRUCTION POWER
A. DISCONNECT CONSTRUCTION POWER CABLE AT NEW MS - THIS BREAKER TO REMAIN AS SPARE ON DAY ONE
B. DEMO CONSTRUCTION CABLE, REMOVE CONSTRUCTION TX AND ASSOCIATED EQUIPMENT

NOTE: THE ABOVE PHASING INDICATES 'JUST-IN-TIME' WORKS TO BE DONE IN ORDER TO MOVE TO NEXT ITEM. THE ITEMS DO NOT NECESSARILY RUN IN CHRONOLOGICAL ORDER FROM TOP TO BOTTOM. OPPORTUNITIES FOR CONSTRUCTION OPTIMIZATION EXIST IN SOME ITEMS BEING EXECUTED CONCURRENTLY. FOR EXAMPLE, THE GROUND WORKS FOR THE NEW PERMANENT CABLING FROM THE NEW LADWP TX TO THE NEW MS CAN OCCUR AT THE SAME TIME AS SIMILAR GROUND WORKS IN EFFECTED AREA AS TO AVOID DIGGING TWICE IN THE SAME LOCATIONS.
THE CONTRACTOR IS WHOLEY RESPONSIBLE FOR SITE POWER AND MAY OR MAY NOT CHOOSE TO USE THE PERMANENT INSTALLATION/EQUIPMENT TO ESTABLISH SITE POWER.

2 BOILER AND TRASH ENCLOSURE AREA
1/16" = 1'-0"

KEYED NOTES

1 PROPOSED LOCATION FOR NEW LADWP TX. FINAL TX LOCATION TO BE CONFIRMED FOLLOWING RECEIPT OF LADWP REQUIREMENTS AND SUBSEQUENTLY FURTHER COORDINATION WITH STRUCTURAL GRADE BEAM AND PILE CAP.

2 WHERE EVER FEASIBLE, EXISTING CONDUIT SHALL BE REUSED.

3 REFER TO SHEET E201C FOR CONTINUATION OF CONDUIT.

NOT FOR CONSTRUCTION

09.AUG.2021

belzberg architects
2321 MAIN STREET
SANTA MONICA, CA 90405
310.453.9611
www.belzbergarchitects.com

ARUP
Arup North America Ltd.
900 Wilshire Boulevard,
19th Floor
Los Angeles CA 90017
Tel: 310 578 4400
www.arup.com

#	DESCRIPTION	DATE

HOLOCAUST MUSEUM LA EXPANSION

100 THE GROVE DRIVE
LOS ANGELES, CA 90036

ELECTRICAL SITE PLAN

PROJECT NUMBER: 17009

E100

08/09/21 19:11:21

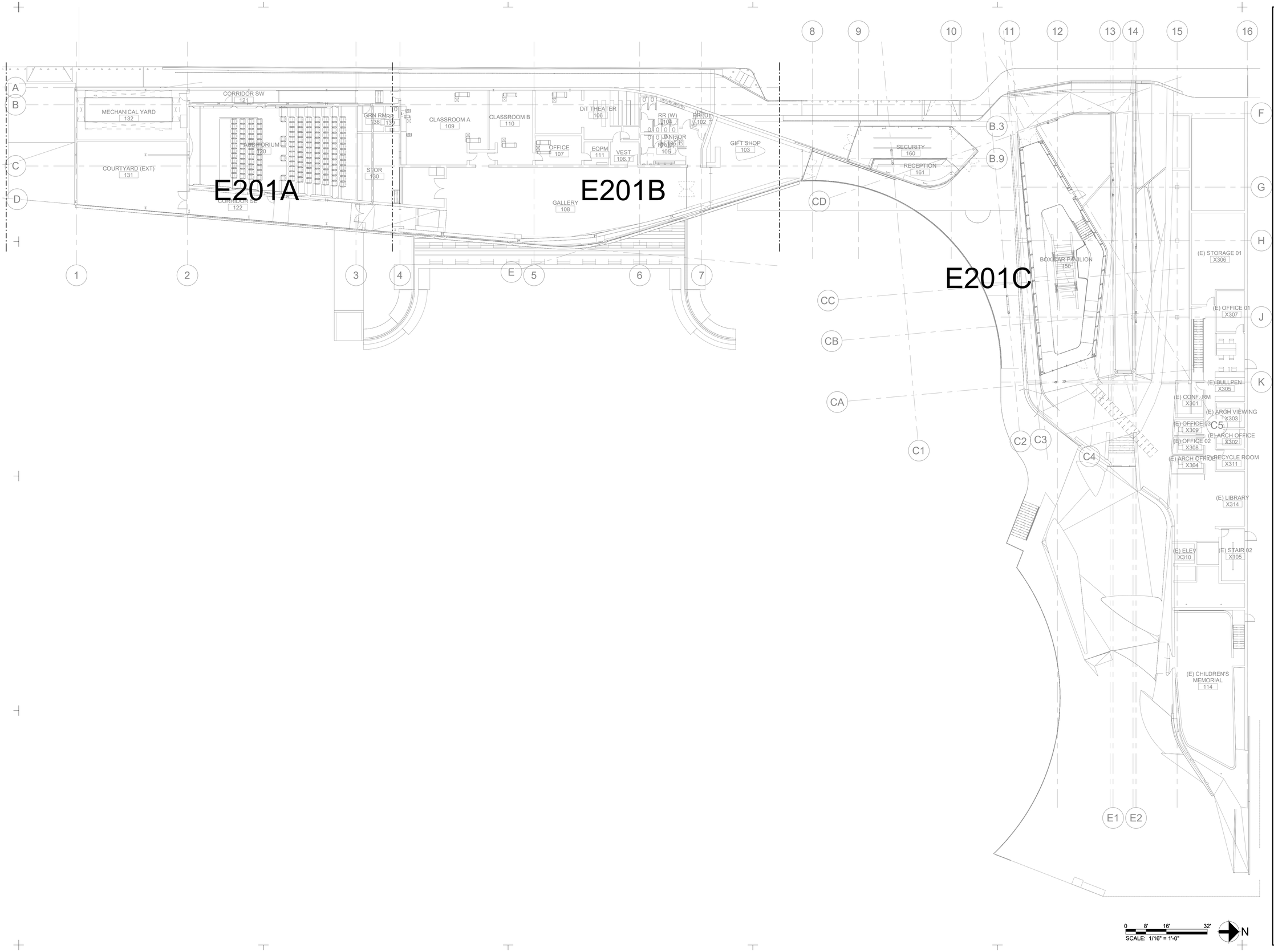

0 8' 16' 32'
SCALE: 1/16" = 1'-0"

N

NOT FOR CONSTRUCTION

09.AUG.2021

belzberg architects
2321 MAIN STREET
SANTA MONICA, CA 90405
310.453.9611
www.belzbergarchitects.com

ARUP
Arup North America Ltd.
900 Wilshire Boulevard,
19th Floor
Los Angeles CA 90017
Tel: 310 578 4400
www.arup.com

#	DESCRIPTION	DATE

HOLOCAUST MUSEUM LA EXPANSION

100 THE GROVE DRIVE
LOS ANGELES, CA 90036

ELECTRICAL GROUND FLOOR PLAN - OVERALL

PROJECT NUMBER: 17009

E201

08/09/21 9:11:28

KEYED NOTES

1 FOR CONNECTION TO HAND DRYER.
2 FOR CONNECTION TO POWER DOOR.
3 COMBINATION POWER AND DATA FLOOR BOX.
4 JUNCTION BOX FOR CONNECTION TO BMS CONTROLS.

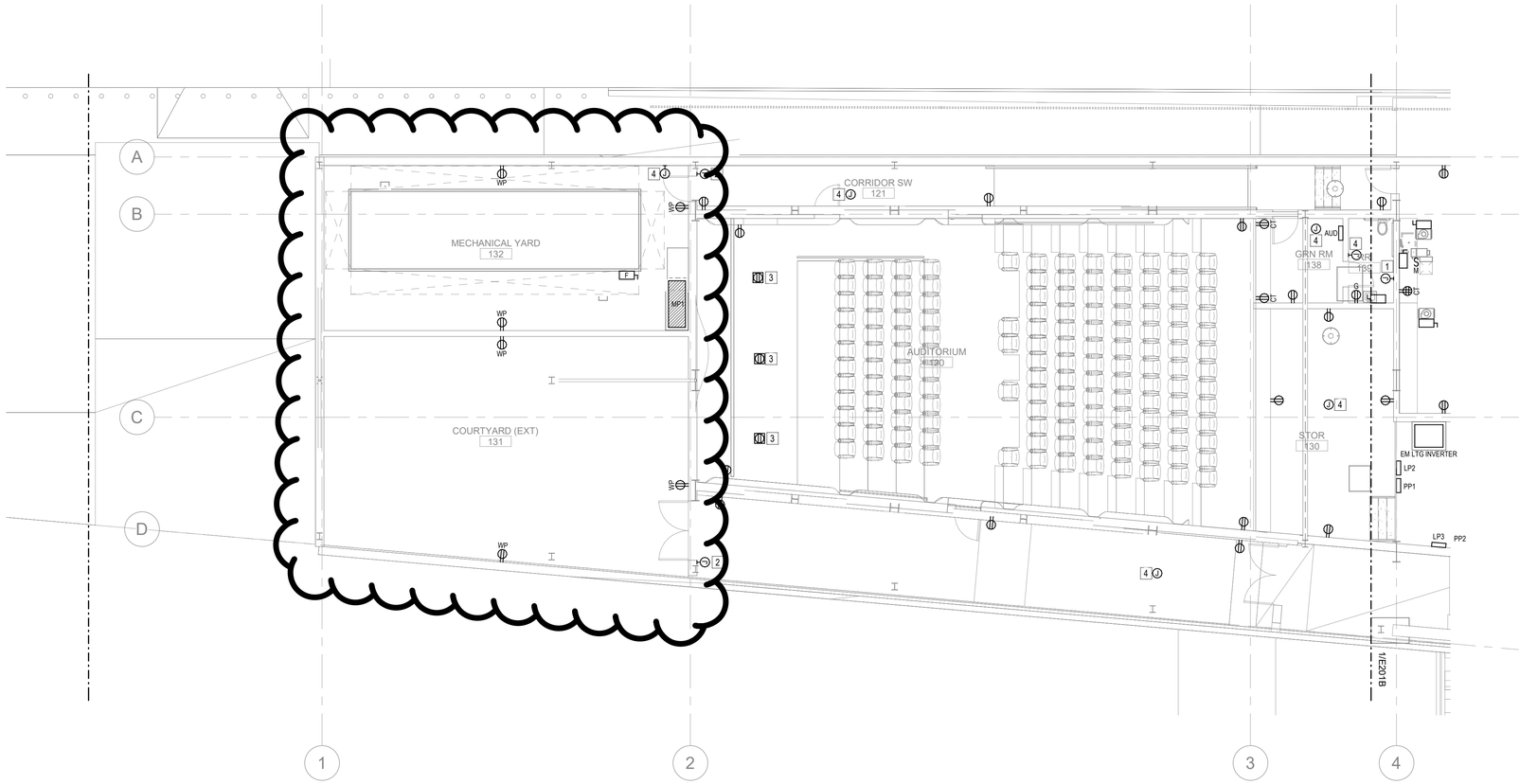

SCALE: 1/8" = 1'-0"

0 4' 8' 16'

N

NOT FOR CONSTRUCTION

09.AUG.2021

ba
belzberg architects
2321 MAIN STREET
SANTA MONICA, CA 90405
310.453.9611
www.belzbergarchitects.com

ARUP
Arup North America Ltd.
900 Wilshire Boulevard,
19th Floor
Los Angeles CA 90017
Tel: 310 578 4400
www.arup.com

#	DESCRIPTION	DATE

HOLOCAUST MUSEUM LA EXPANSION

100 THE GROVE DRIVE
LOS ANGELES, CA 90036

ELECTRICAL LEARNING CENTER GROUND FLOOR PLAN - SOUTH

PROJECT NUMBER: 17009

E201A

08/09/21 19:11:32

KEYED NOTES

1 FOR CONNECTION TO HAND DRYER.
2 FOR CONNECTION TO POWER DOOR.
3 CEILING MOUNTED RECEPTACLE FOR PROJECTOR.
4 FLOOR BOX FOR CONNECTION TO HOLOGRAM PROJECTOR.
5 JUNCTION BOX FOR CONNECTION TO BMS CONTROLS.
6 REFER TO SHEET E100 FOR CONTINUATION OF CONDUIT.

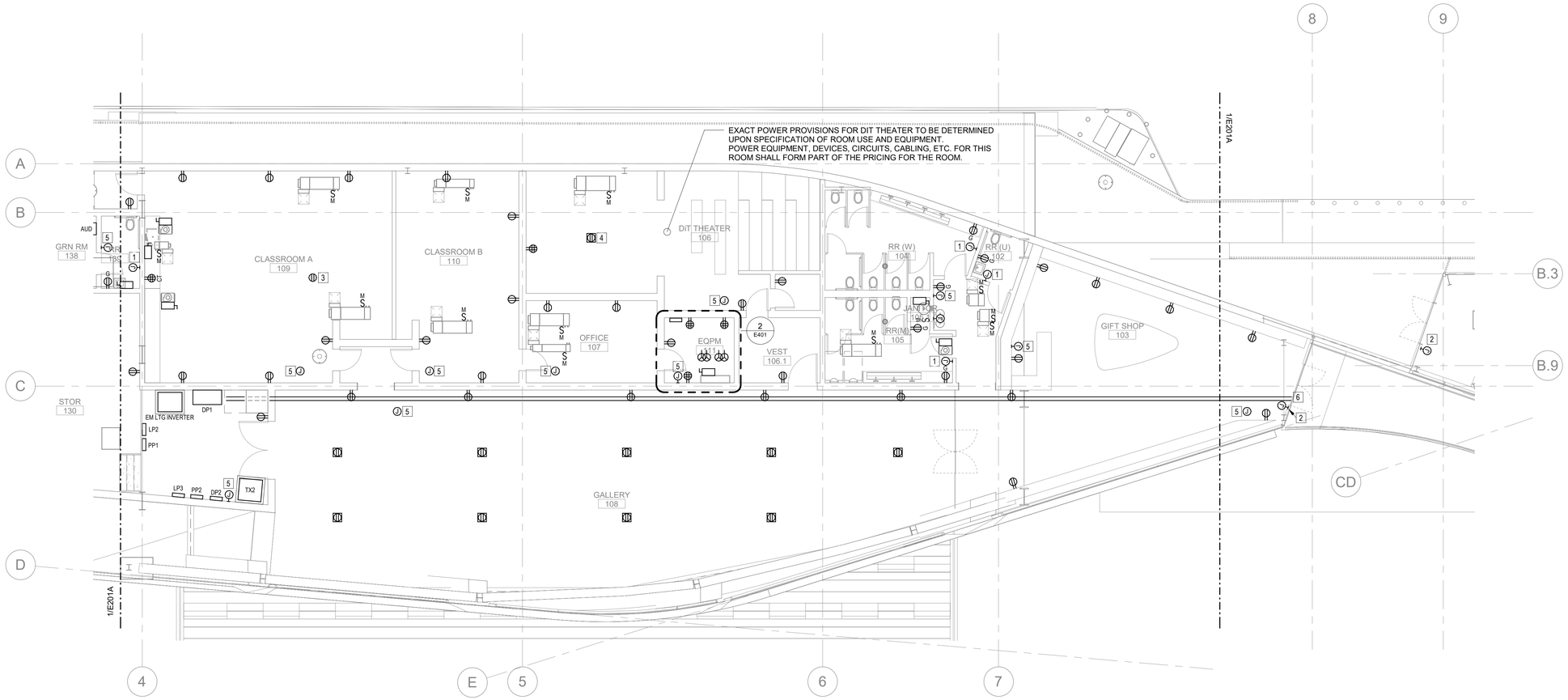

0 4' 8' 16'
SCALE: 1/8" = 1'-0"

N

NOT FOR CONSTRUCTION

09.AUG.2021

belzberg architects
2321 MAIN STREET
SANTA MONICA, CA 90405
310.453.9611
www.belzbergarchitects.com

ARUP
Arup North America Ltd.
900 Wilshire Boulevard,
19th Floor
Los Angeles CA 90017
Tel: 310 578 4400
www.arup.com

#	DESCRIPTION	DATE

HOLOCAUST MUSEUM LA EXPANSION

100 THE GROVE DRIVE
LOS ANGELES, CA 90036

ELECTRICAL LEARNING CENTER GROUND FLOOR PLAN - NORTH

PROJECT NUMBER: 17009

E201B

08/09/21 19:11:36

KEYED NOTES

1 FOR CONNECTION TO HAND DRYER.
2 FOR CONNECTION TO POWER DOOR.
3 JUNCTION BOX FOR CONNECTION TO BMS CONTROLS.
4 REFER TO SHEET E100 FOR CONTINUATION OF CONDUIT.
5 DISCONNECT FOR BAGGAGE SCANNER.

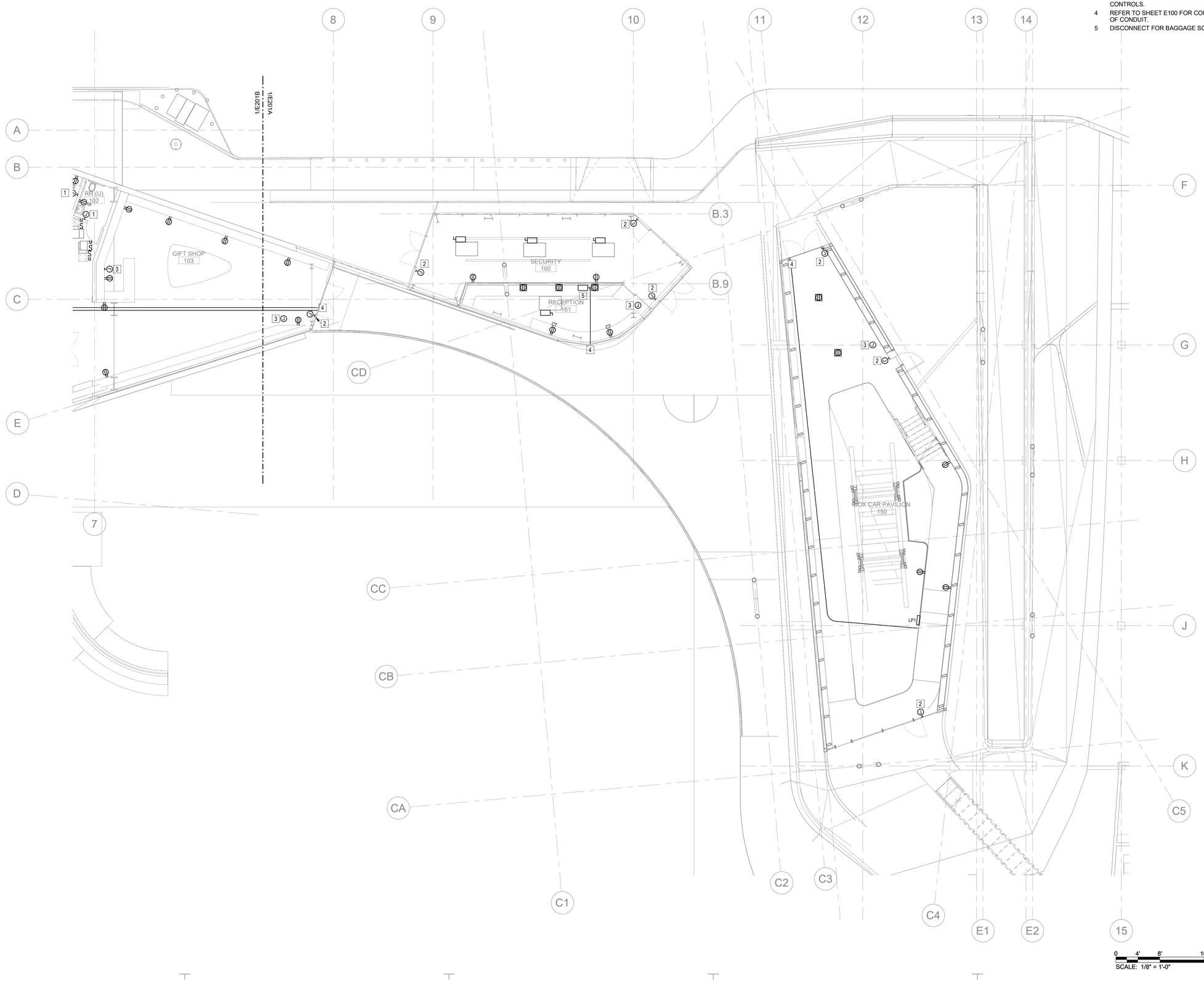

SCALE: 1/8" = 1'-0"

NOT FOR CONSTRUCTION

09.AUG.2021

belzberg architects
2321 MAIN STREET
SANTA MONICA, CA 90405
310.453.9611
www.belzbergarchitects.com

ARUP
Arup North America Ltd.
900 Wilshire Boulevard,
19th Floor
Los Angeles CA 90017
Tel: 310 578 4400
www.arup.com

#	DESCRIPTION	DATE

HOLOCAUST MUSEUM LA EXPANSION

100 THE GROVE DRIVE
LOS ANGELES, CA 90036

ELECTRICAL BOXCAR GROUND FLOOR PLAN

PROJECT NUMBER: 17009

E201C

08/09/21 19:11:40

0 8' 16' 32'
SCALE: 1/16" = 1'-0"

N

NOT FOR CONSTRUCTION

09.AUG.2021

ba
belzberg architects
2321 MAIN STREET
SANTA MONICA, CA 90405
310.453.9611
www.belzbergarchitects.com

ARUP
Arup North America Ltd.
900 Wilshire Boulevard,
19th Floor
Los Angeles CA 90017
Tel: 310 578 4400
www.arup.com

#	DESCRIPTION	DATE

HOLOCAUST MUSEUM LA EXPANSION

100 THE GROVE DRIVE
LOS ANGELES, CA 90036

ELECTRICAL MEZZANINE FLOOR PLAN - OVERALL

PROJECT NUMBER: 17009

E202

08/09/21 19:11:46

KEYED NOTES

1 PROVIDE 20A 208V SINGLE PHASE CIRCUIT FOR CEILING MOUNTED PROJECTOR.

2 JUNCTION BOX FOR CONNECTION TO BMS CONTROLS.

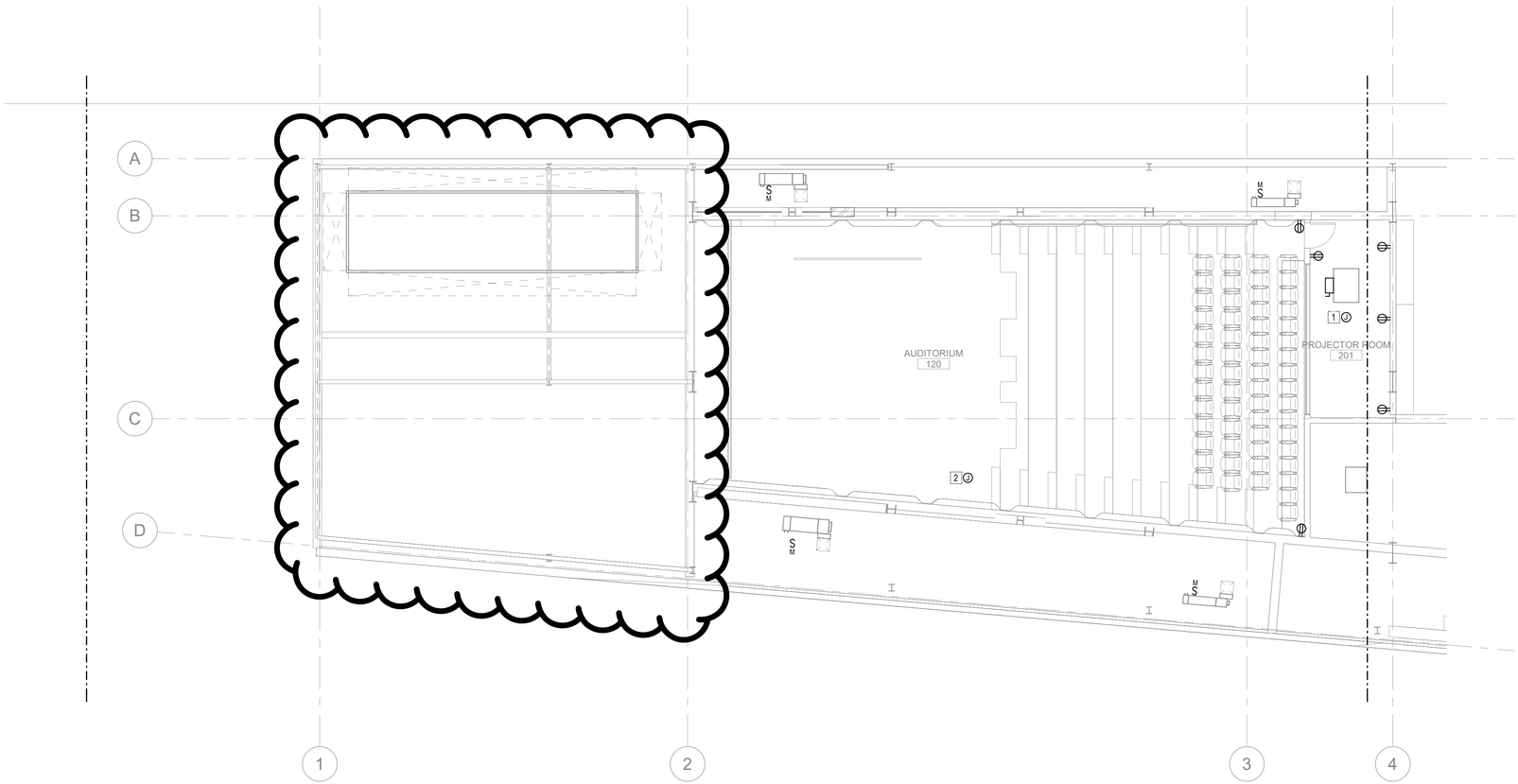

SCALE: 1/8" = 1'-0"

N

NOT FOR CONSTRUCTION

09.AUG.2021

ba
belzberg architects
2321 MAIN STREET
SANTA MONICA, CA 90405
310.453.9611
www.belzbergarchitects.com

ARUP
Arup North America Ltd.
900 Wilshire Boulevard,
19th Floor
Los Angeles CA 90017
Tel: 310 578 4400
www.arup.com

#	DESCRIPTION	DATE

HOLOCAUST MUSEUM LA EXPANSION

100 THE GROVE DRIVE
LOS ANGELES, CA 90036

ELECTRICAL LEARNING CENTER MEZZ FLOOR PLAN - SOUTH

PROJECT NUMBER: 17009

E202A

08/09/21 19:11:49

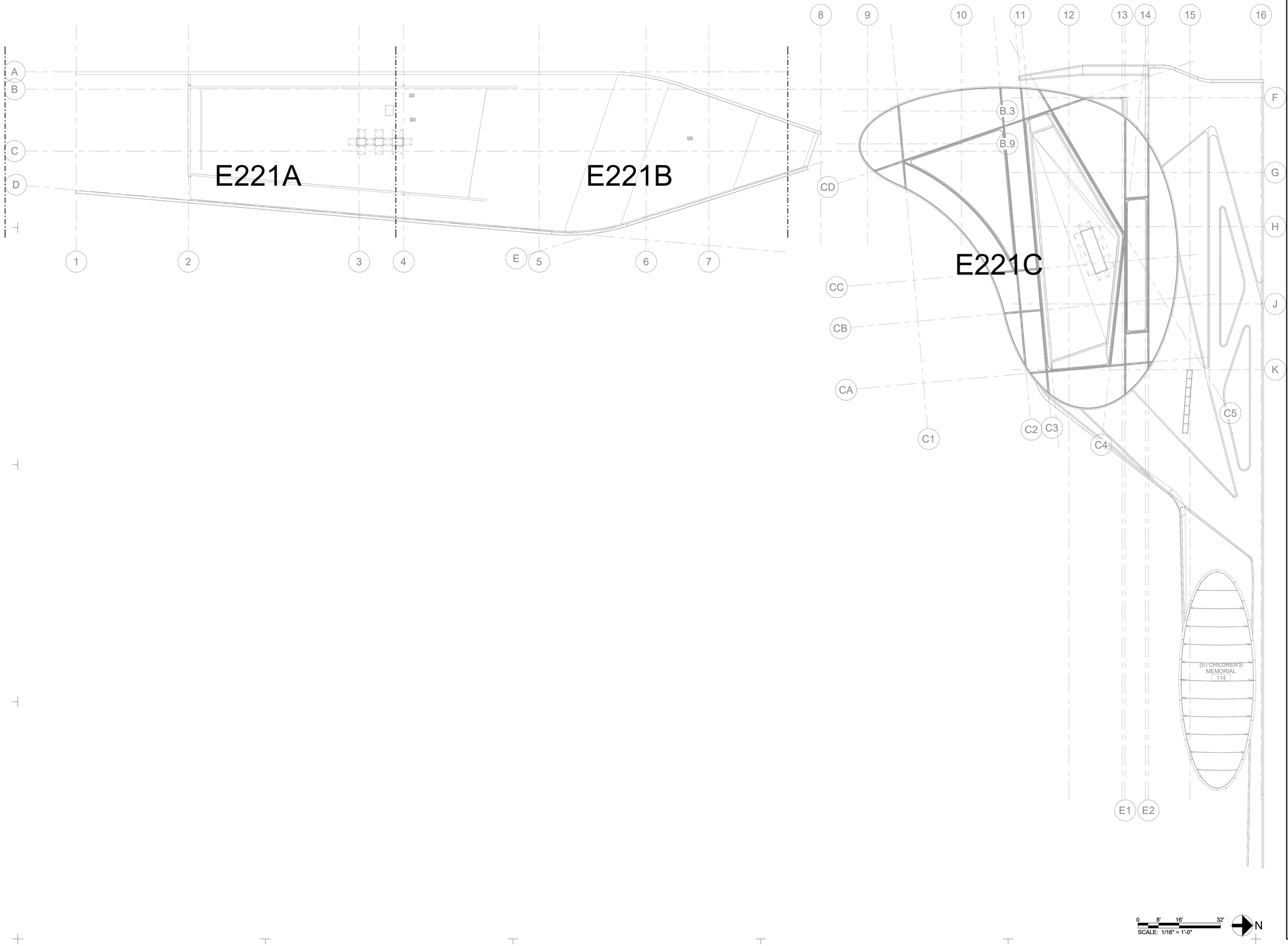

NOT FOR CONSTRUCTION

09.AUG.2021

ba
belzberg architects
2321 MAIN STREET
SANTA MONICA, CA 90405
310.453.9611
www.belzbergarchitects.com

ARUP
Arup North America Ltd.
900 Wilshire Boulevard,
19th Floor
Los Angeles CA 90017
Tel: 310 578 4400
www.arup.com

#	DESCRIPTION	DATE

HOLOCAUST MUSEUM LA EXPANSION

100 THE GROVE DRIVE
LOS ANGELES, CA 90036

ELECTRICAL ROOF LEVEL PLAN - OVERALL

PROJECT NUMBER: 17009

E221

08/09/21 19:11:51

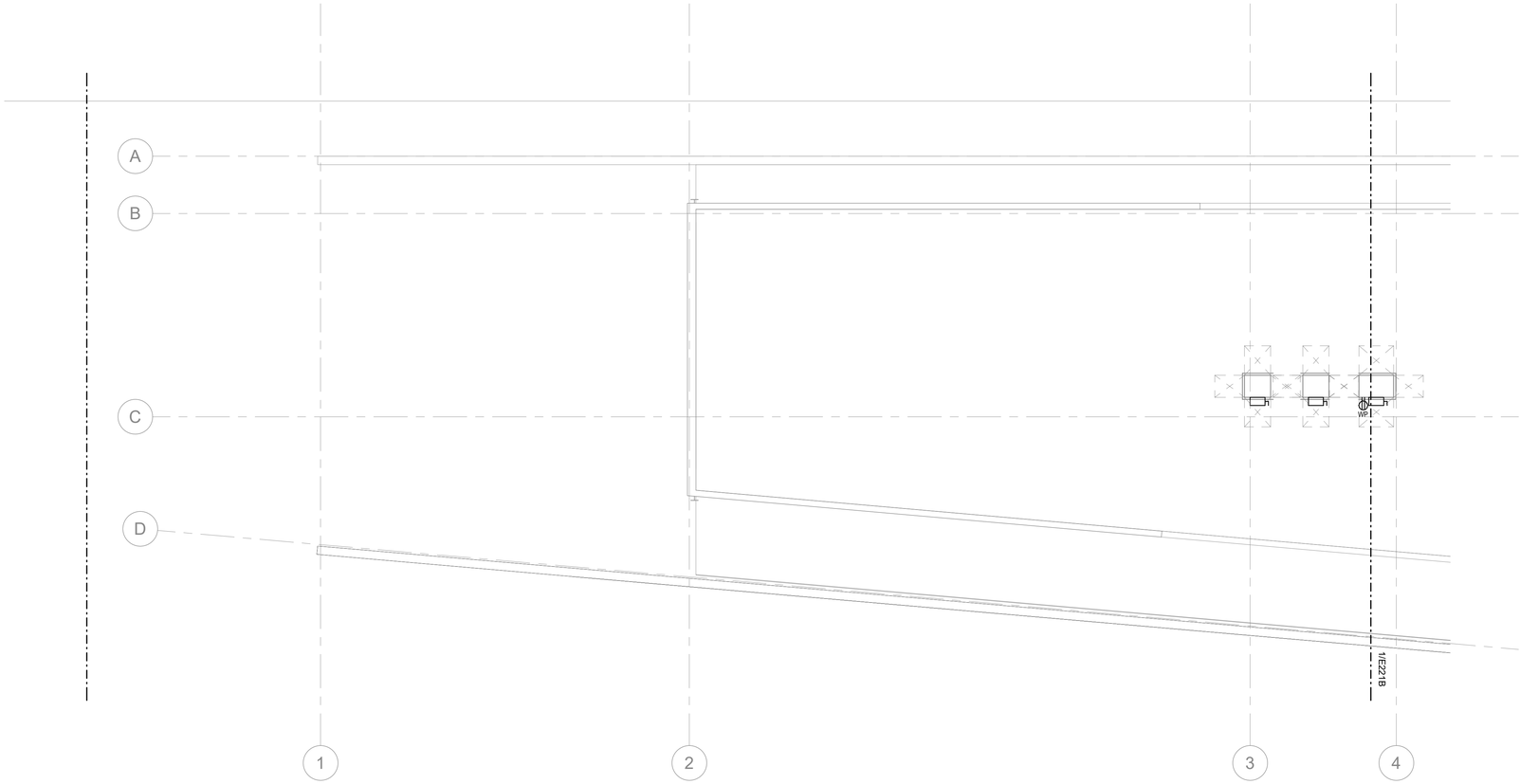

0 4' 8' 16'
SCALE: 1/8" = 1'-0"

N

NOT FOR CONSTRUCTION

09.AUG.2021

ba
belzberg architects
2321 MAIN STREET
SANTA MONICA, CA 90405
310.453.9611
www.belzbergarchitects.com

ARUP
Arup North America Ltd.
900 Wilshire Boulevard,
19th Floor
Los Angeles CA 90017
Tel: 310 578 4400
www.arup.com

#	DESCRIPTION	DATE

HOLOCAUST MUSEUM LA EXPANSION

100 THE GROVE DRIVE
LOS ANGELES, CA 90036

ELECTRICAL LEARNING CENTER ROOF LEVEL PLAN - SOUTH

PROJECT NUMBER: 17009

E221A

08/09/21 9:11:51

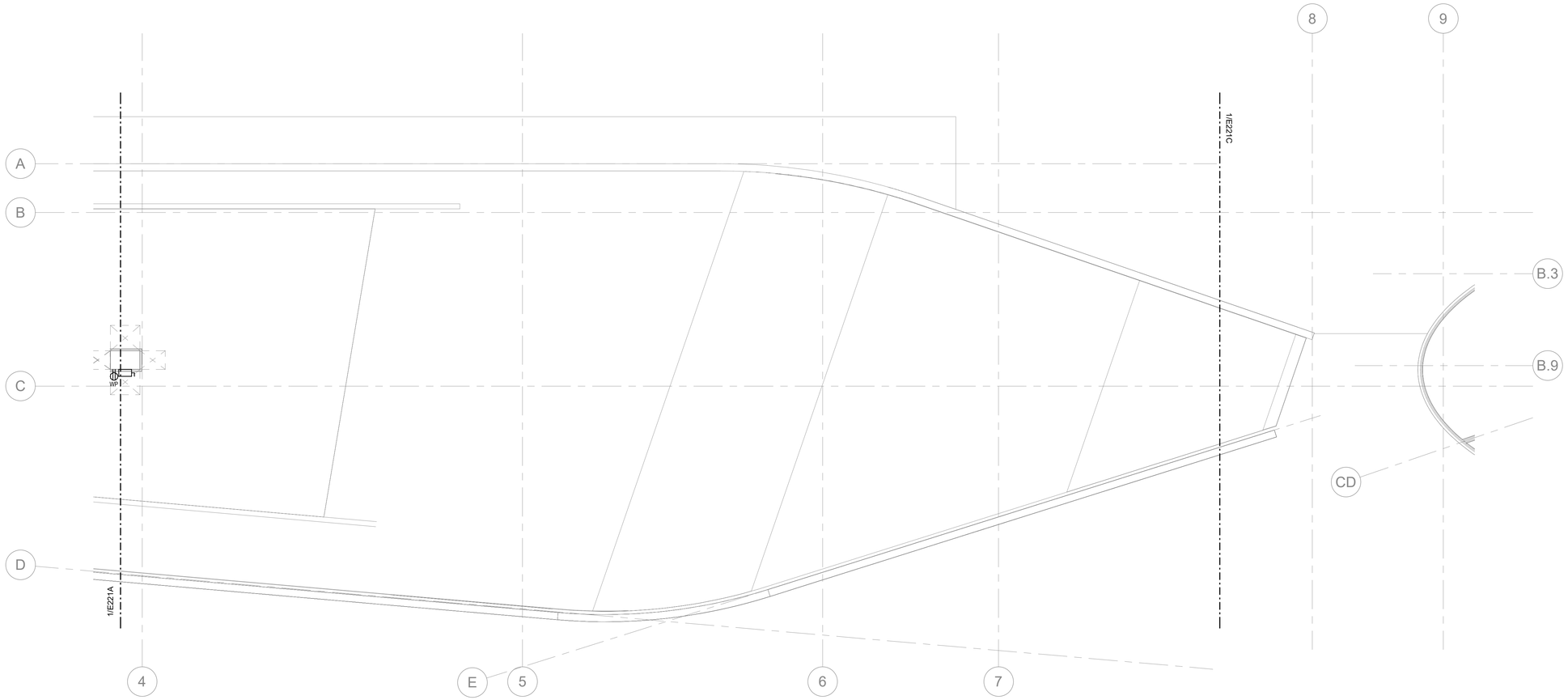

0 4' 8' 16'
SCALE: 1/8" = 1'-0"

N

NOT FOR CONSTRUCTION

09.AUG.2021

ba
belzberg architects
2321 MAIN STREET
SANTA MONICA, CA 90405
310.453.9611
www.belzbergarchitects.com

ARUP
Arup North America Ltd.
900 Wilshire Boulevard,
19th Floor
Los Angeles CA 90017
Tel: 310 578 4400
www.arup.com

#	DESCRIPTION	DATE

HOLOCAUST MUSEUM LA EXPANSION

100 THE GROVE DRIVE
LOS ANGELES, CA 90036

ELECTRICAL LEARNING CENTER ROOF LEVEL PLAN - NORTH

PROJECT NUMBER: 17009

E221B

08/09/21 19:11:52

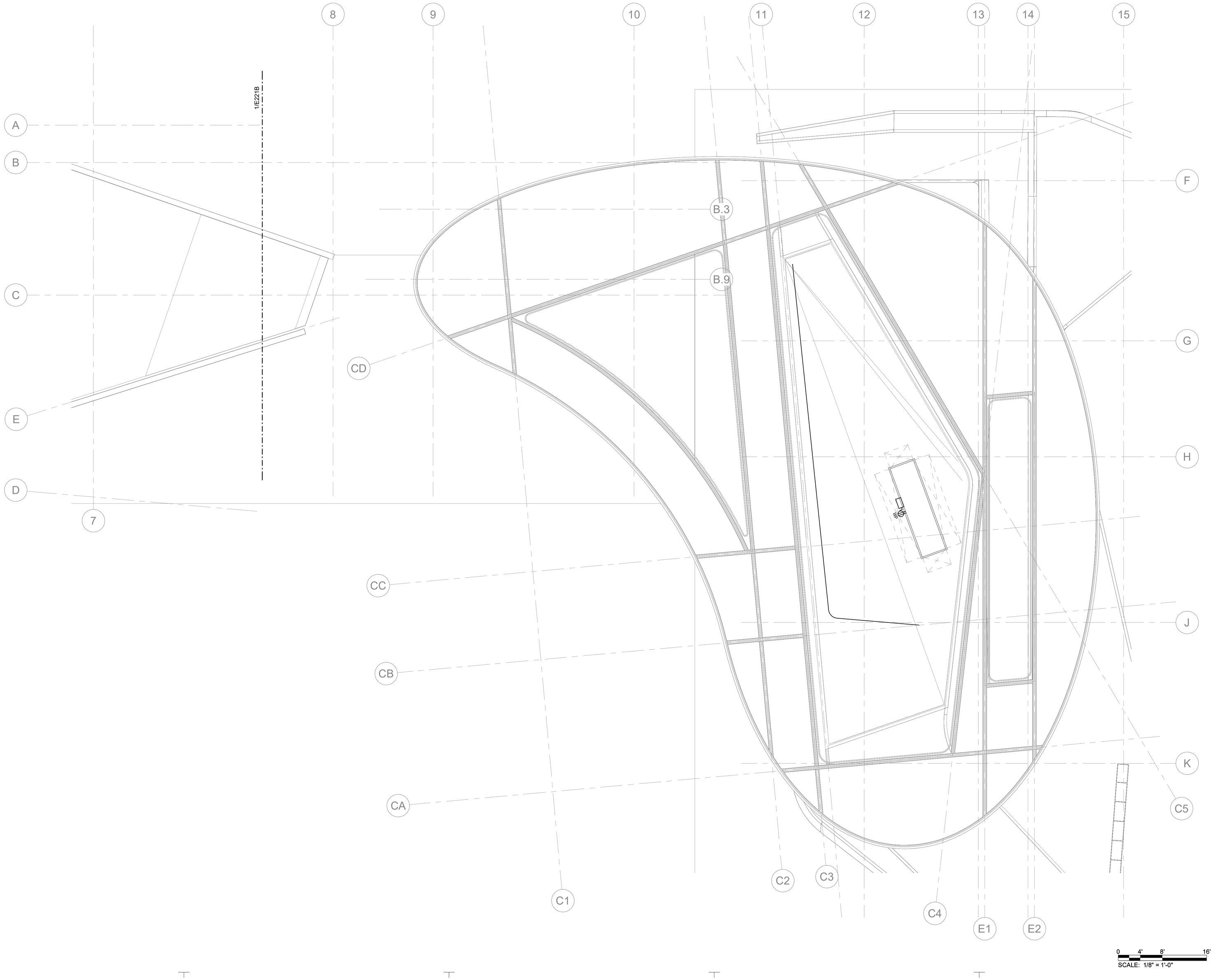

NOT FOR CONSTRUCTION

09.AUG.2021

ba
belzberg architects
2321 MAIN STREET
SANTA MONICA, CA 90405
310.453.9611
www.belzbergarchitects.com

ARUP
Arup North America Ltd.
900 Wilshire Boulevard,
19th Floor
Los Angeles CA 90017
Tel: 310 578 4400
www.arup.com

#	DESCRIPTION	DATE

HOLOCAUST MUSEUM LA EXPANSION

100 THE GROVE DRIVE
LOS ANGELES, CA 90036

ELECTRICAL BOXCAR ROOF LEVEL PLAN

PROJECT NUMBER: 17009

E221C

08/09/21 19:11:53

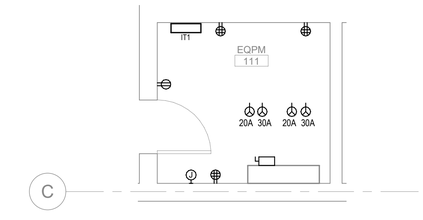

2 LEVEL 1 - EQUIPMENT ROOM 111
1/4" = 1'-0"

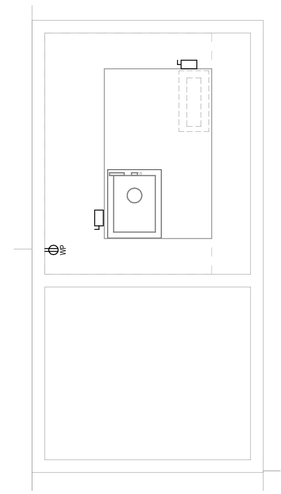

1 BOILER AND TRASH ENCLOSURE AREA
1/4" = 1'-0"

0 2' 4' 8'
SCALE: 1/4" = 1'-0"

N

NOT FOR CONSTRUCTION

09.AUG.2021

ba
belzberg architects
2321 MAIN STREET
SANTA MONICA, CA 90405
310.453.9611
www.belzbergarchitects.com

ARUP
Arup North America Ltd.
900 Wilshire Boulevard,
19th Floor
Los Angeles CA 90017
Tel: 310 578 4400
www.arup.com

#	DESCRIPTION	DATE

HOLOCAUST MUSEUM LA EXPANSION

100 THE GROVE DRIVE
LOS ANGELES, CA 90036

ELECTRICAL ENLARGED PLANS

PROJECT NUMBER: 17009

E401

08/09/21 19:11:55

LEVEL 3
ROOF TOP

LEVEL 02
MEZZANINE

LEVEL 01
GALLERY

LEVEL 00

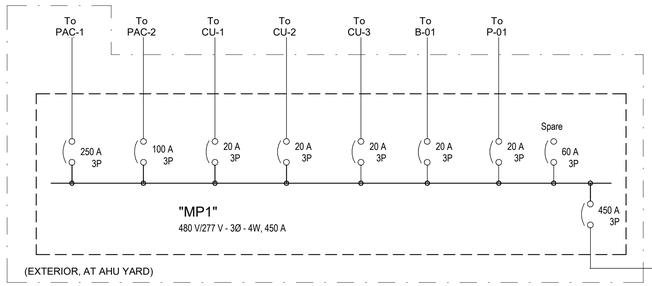

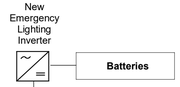

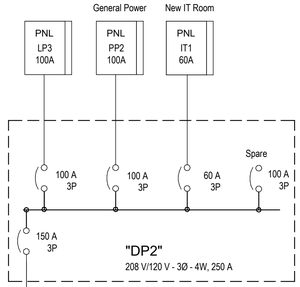

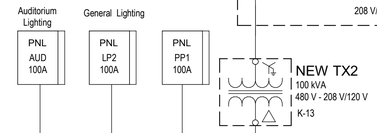

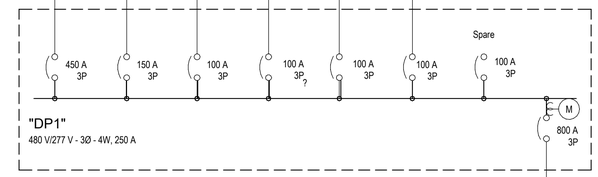

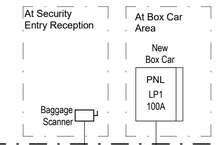

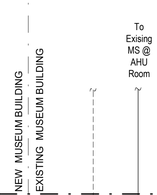

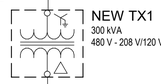

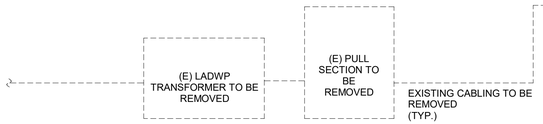

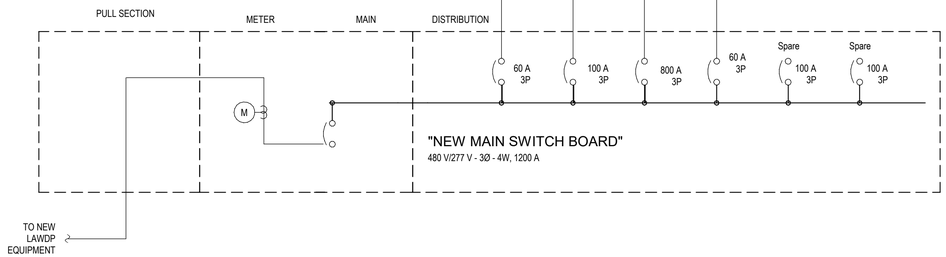

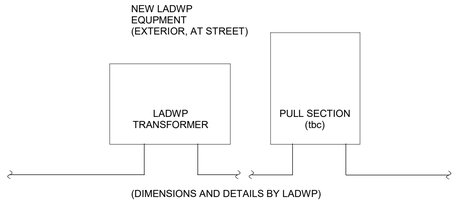

NOTES:

1. LEAVE 6FT HEIGHT OR TO BOTTOM OF STRUCTURE CLEAR OVER TOP OF THE FULL FOOTPRINT OF ALL ELECTRICAL EQUIPMENT PER CEC.
2. BRANCH CIRCUIT PANELS TO BE PROVIDED WITH MAIN INCOMING BREAKER.
3. APPLICATION AND COORDINATION FOR SITE CONSTRUCTION POWER BY GENERAL CONTRACTOR.
4. FINAL PHASING TO ACHIEVE THE CHANGE OVER FROM THE EXISTING LADWP TRANSFORMER FEED TO THE NEW LADWP TRANSFORMER FEED TO BE COORDINATED BY THE GENERAL CONTRACTOR VIA COMMUNICATIONS WITH LADWP ON BEHALF OF OWNER.
5. LADWP TO CONFIRM IF NEW METHANE PULL BOX IS REQUIRED.
6. TIMING AND SHUT DOWN WINDOW FOR THE BACK-FEEDING OF THE NEW CABLING FROM NEW MS TO THE EXISTING MS TO BE COORDINATED BY THE GENERAL CONTRACTOR IN COMMUNICATIONS WITH THE OWNER.
7. PROVIDE DISCONNECTS LOCAL TO M & P EQUIPMENT LOCATIONS.
8. EMERGENCY LIGHTING INVERTER AND BATTERIES TO BE PROCURED AS PACKAGED CENTRAL BATTERY SYSTEM WITH INTEGRAL DISTRIBUTION BOARD FOR BRANCH CIRCUITS TO EMERGENCY LIGHTING (MIN 36 CIRCUITS).

NOT FOR CONSTRUCTION

09.AUG.2021

belzberg architects
2321 MAIN STREET
SANTA MONICA, CA 90405
310.453.9611
www.belzbergarchitects.com

ARUP
Arup North America Ltd.
900 Wilshire Boulevard,
19th Floor
Los Angeles CA 90017
Tel: 310 578 4400
www.arup.com

#	DESCRIPTION	DATE

HOLOCAUST MUSEUM LA EXPANSION

100 THE GROVE DRIVE
LOS ANGELES, CA 90036

ELECTRICAL SINGLE LINE DIAGRAM

PROJECT NUMBER: 17009

E501

08/09/21 19:11:55

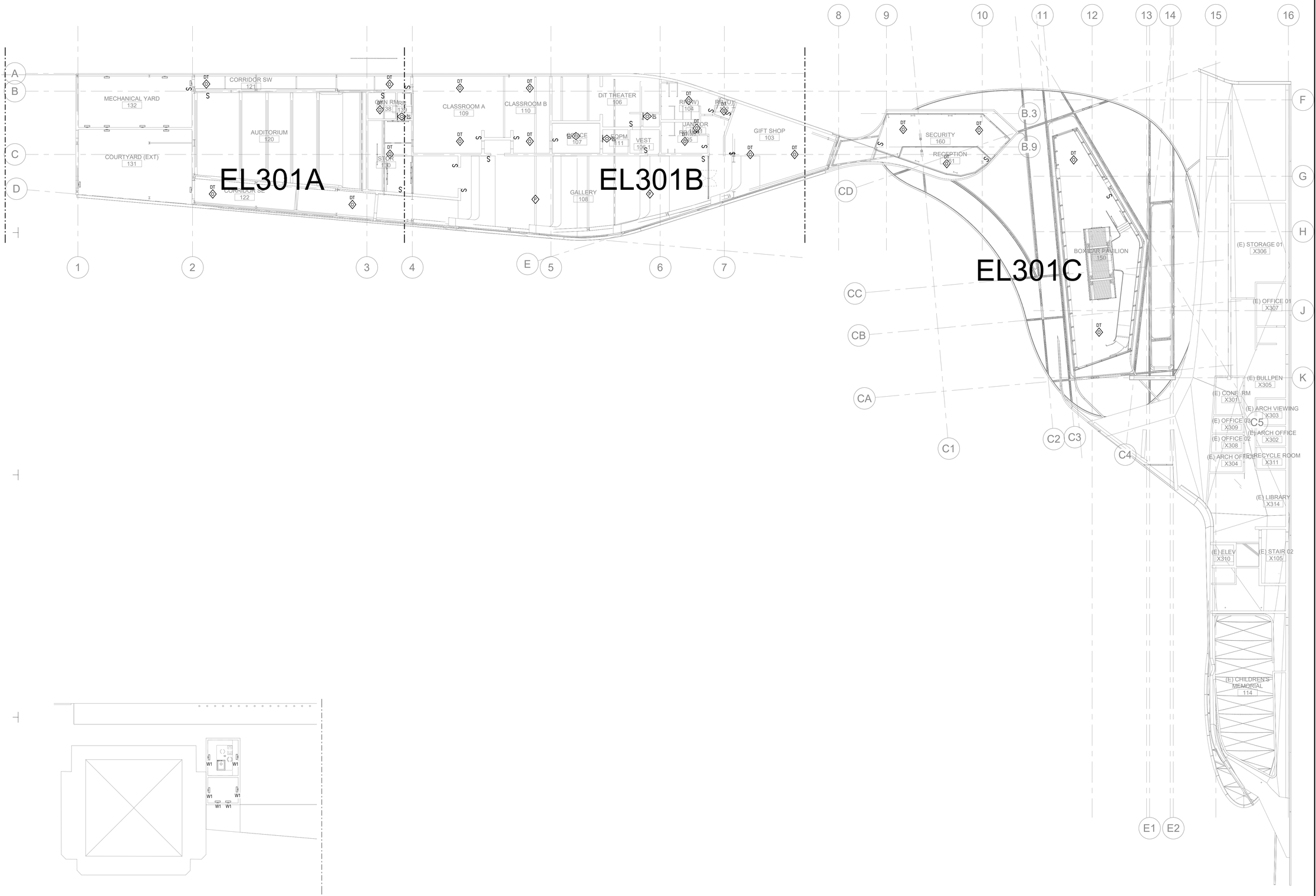

2 BOILER AND TRASH ENCLOSURE AREA
1/16" = 1'-0"

0 8' 16' 32'
SCALE: 1/16" = 1'-0"

N

NOT FOR CONSTRUCTION

09.AUG.2021

belzberg architects
2321 MAIN STREET
SANTA MONICA, CA 90405
310.453.9611
www.belzbergarchitects.com

ARUP
Arup North America Ltd.
900 Wilshire Boulevard,
19th Floor
Los Angeles CA 90017
Tel: 310 578 4400
www.arup.com

#	DESCRIPTION	DATE

HOLOCAUST MUSEUM LA EXPANSION

100 THE GROVE DRIVE
LOS ANGELES, CA 90036

ELECTRICAL LIGHTING GROUND FLOOR CEILING PLAN - OVERALL

PROJECT NUMBER: 17009

EL301

08/09/21 19:11:59

KEYED NOTES

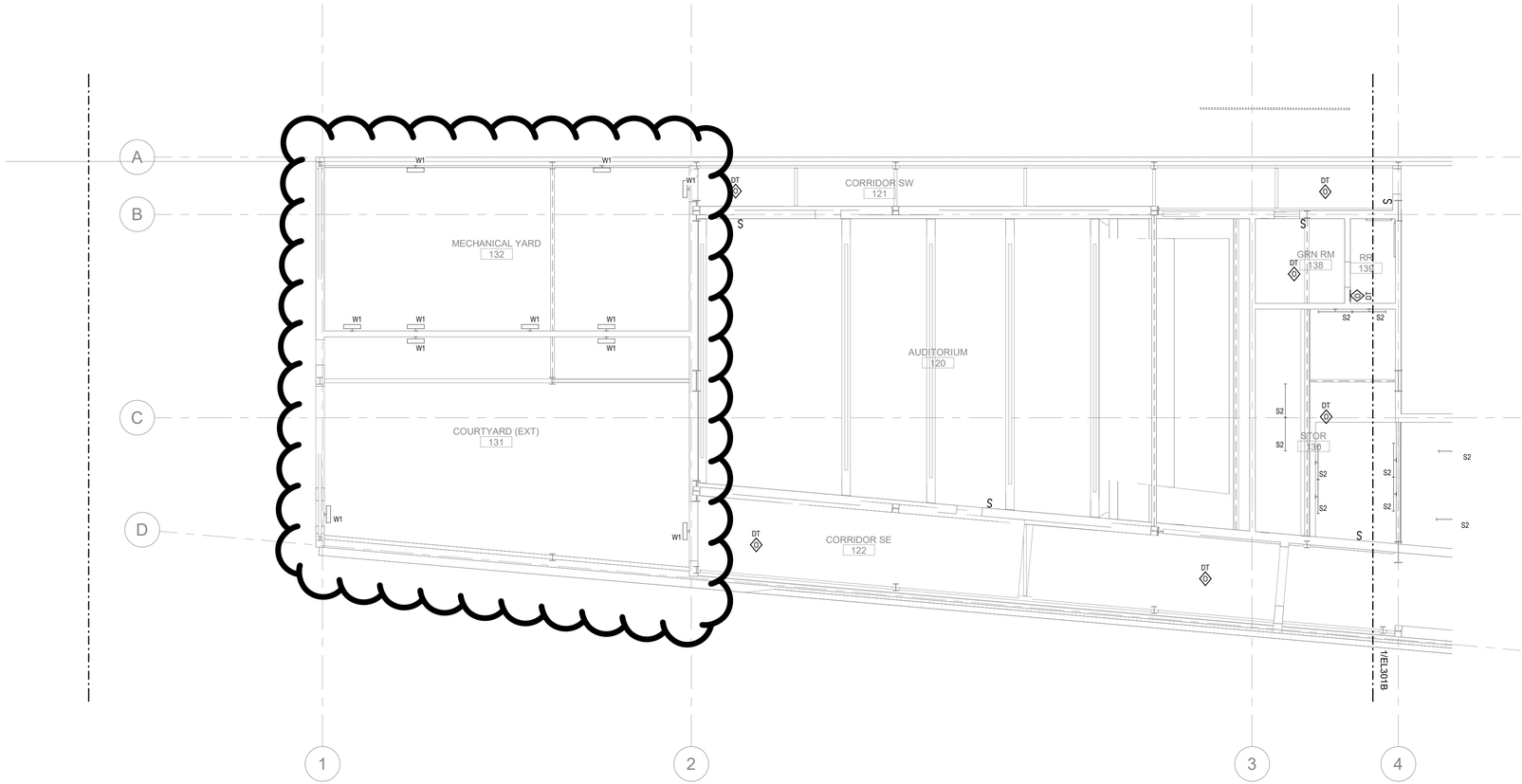

0 4' 8' 16'

SCALE: 1/8" = 1'-0"

N

NOT FOR CONSTRUCTION

09.AUG.2021

belzberg architects

2321 MAIN STREET
SANTA MONICA, CA 90405
310.453.9611

www.belzbergarchitects.com

ARUP

Arup North America Ltd.
900 Wilshire Boulevard,
19th Floor
Los Angeles CA 90017
Tel: 310 578 4400
www.arup.com

#	DESCRIPTION	DATE

HOLOCAUST MUSEUM LA EXPANSION

100 THE GROVE DRIVE
LOS ANGELES, CA 90036

ELECTRICAL LIGHTING
LEARNING CENTER
GROUND FLOOR
CEILING PLAN - SOUTH

PROJECT NUMBER: 17009

EL301A

08/09/21 19:12:03

KEYED NOTES

1 PROVIDE COMBINATION OCCUPANCY SENSOR AND PHOTOCELL IN SINGLE DEVICE.

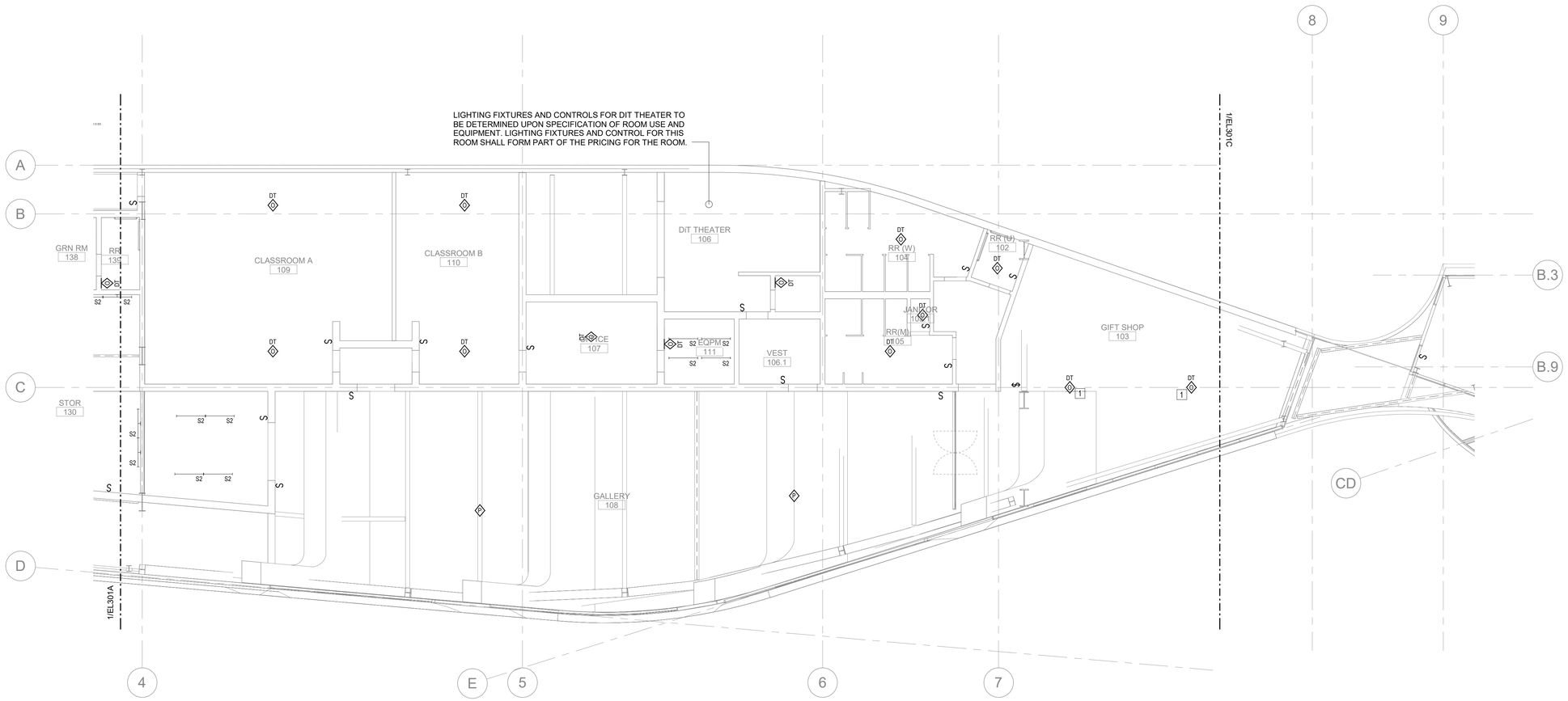

0 4' 8' 16'
SCALE: 1/8" = 1'-0"

N

NOT FOR CONSTRUCTION

09.AUG.2021

belzberg architects
2321 MAIN STREET
SANTA MONICA, CA 90405
310.453.9611
www.belzbergarchitects.com

ARUP
Arup North America Ltd.
900 Wilshire Boulevard,
19th Floor
Los Angeles CA 90017
Tel: 310 578 4400
www.arup.com

#	DESCRIPTION	DATE

HOLOCAUST MUSEUM LA EXPANSION

100 THE GROVE DRIVE
LOS ANGELES, CA 90036

ELECTRICAL LIGHTING
LEARNING CENTER
GROUND FLOOR
CEILING PLAN - NORTH

PROJECT NUMBER: 17009

EL301B

08/09/21 19:12:06

KEYED NOTES

1 PROVIDE COMBINATION OCCUPANCY SENSOR AND PHOTOCELL IN SINGLE DEVICE.

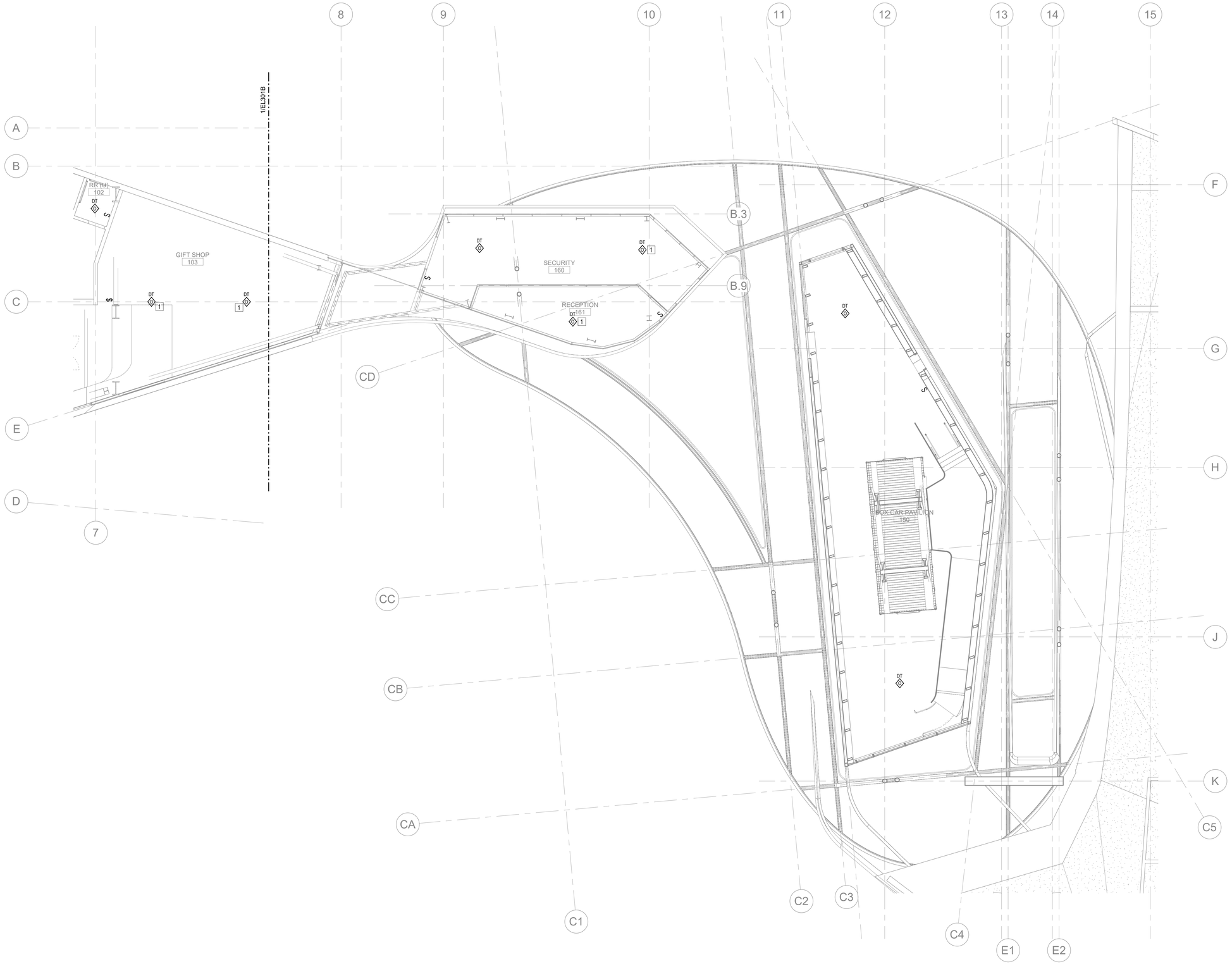

SCALE: 1/8" = 1'-0"

0 4' 8' 16'

N

NOT FOR CONSTRUCTION

09.AUG.2021

ba
belzberg architects

2321 MAIN STREET
SANTA MONICA, CA 90405
310.453.9611

www.belzbergarchitects.com

ARUP

Arup North America Ltd.
900 Wilshire Boulevard,
19th Floor
Los Angeles CA 90017
Tel: 310 578 4400
www.arup.com

#	DESCRIPTION	DATE

HOLOCAUST MUSEUM LA EXPANSION

100 THE GROVE DRIVE
LOS ANGELES, CA 90036

ELECTRICAL LIGHTING BOXCAR GROUND FLOOR CEILING PLAN

PROJECT NUMBER: 17009

EL301C

09/09/21 19:12:11

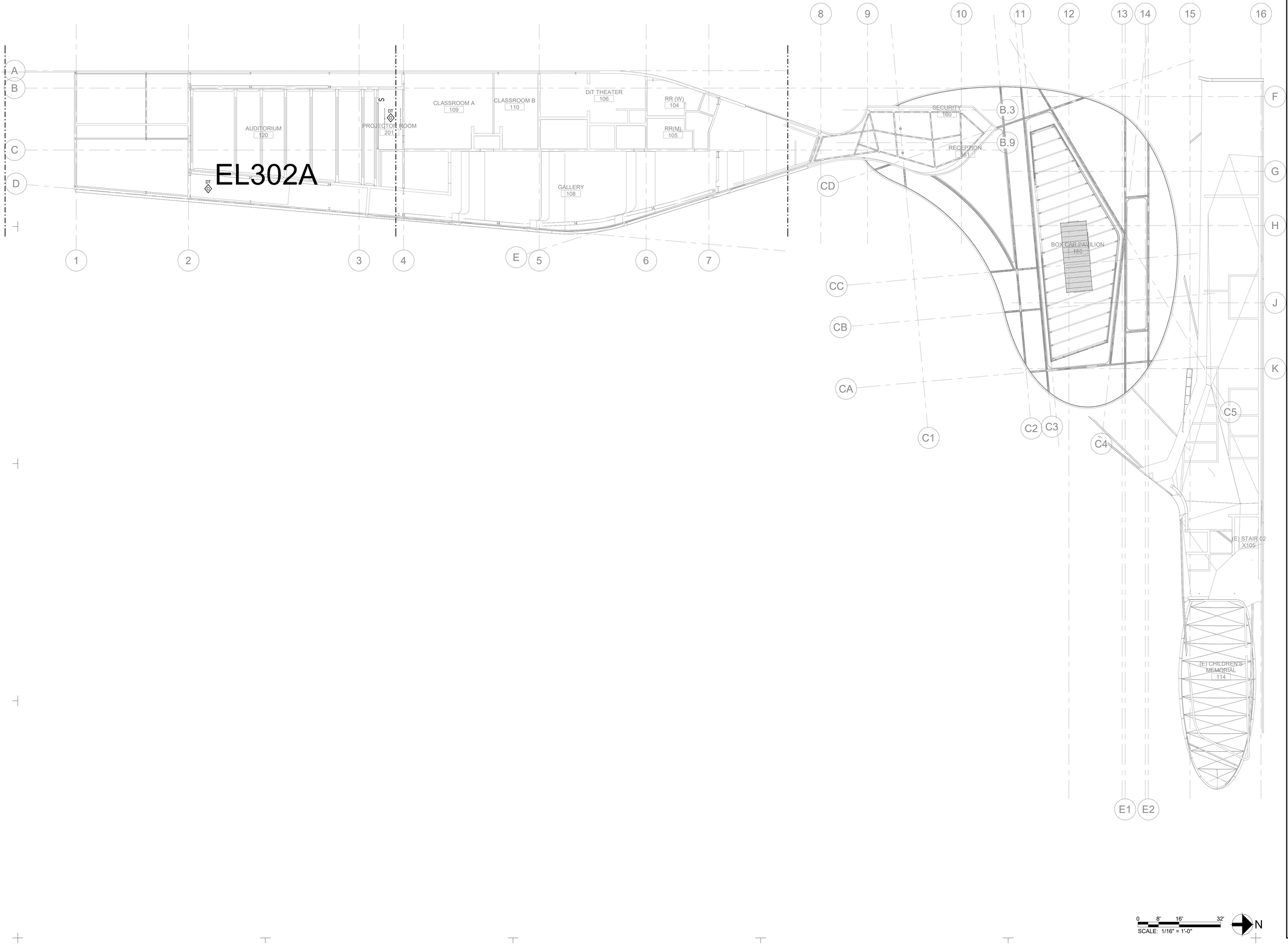

0 8' 16' 32'

SCALE: 1/16" = 1'-0"

N

NOT FOR CONSTRUCTION

09.AUG.2021

ba
belzberg architects
2321 MAIN STREET
SANTA MONICA, CA 90405
310.453.9611
www.belzbergarchitects.com

ARUP
Arup North America Ltd.
900 Wilshire Boulevard,
19th Floor
Los Angeles CA 90017
Tel: 310 578 4400
www.arup.com

#	DESCRIPTION	DATE

HOLOCAUST MUSEUM LA EXPANSION

100 THE GROVE DRIVE
LOS ANGELES, CA 90036

ELECTRICAL LIGHTING MEZZANINE CEILING PLAN - OVERALL

PROJECT NUMBER: 17009

EL302

08/09/21 19:12:16

KEYED NOTES

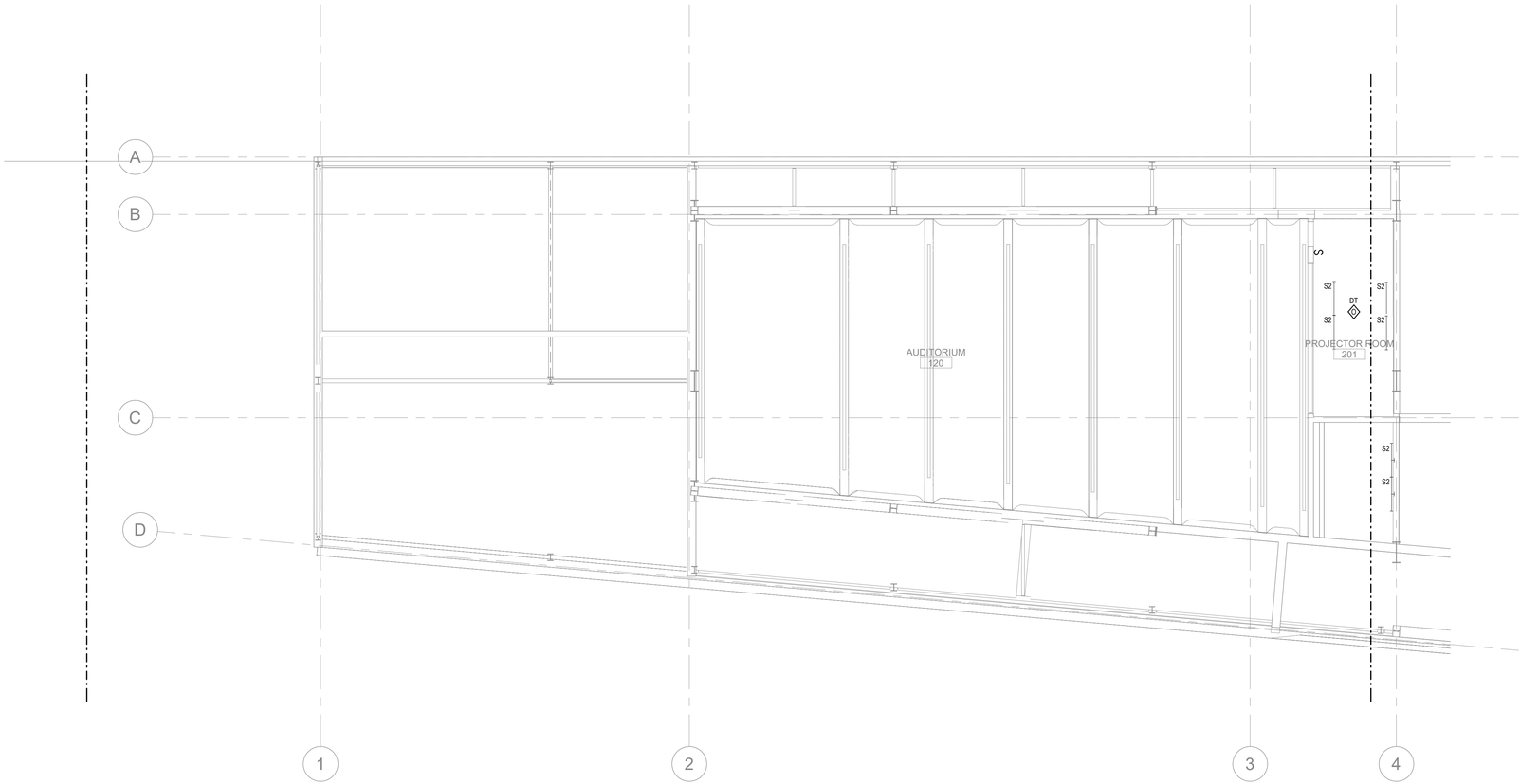

0 4' 8' 16'
SCALE: 1/8" = 1'-0"

N

NOT FOR CONSTRUCTION

09.AUG.2021

ba
belzberg architects
2321 MAIN STREET
SANTA MONICA, CA 90405
310.453.9611
www.belzbergarchitects.com

ARUP
Arup North America Ltd.
900 Wilshire Boulevard,
19th Floor
Los Angeles CA 90017
Tel: 310 578 4400
www.arup.com

#	DESCRIPTION	DATE

HOLOCAUST
MUSEUM LA
EXPANSION

100 THE GROVE DRIVE
LOS ANGELES, CA 90036

ELECTRICAL LIGHTING
LEARNING CENTER
MEZZANINE CEILING
PLAN - SOUTH

PROJECT NUMBER: 17009

EL302A

08/09/21 19:12:19

TELECOMMUNICATIONS GENERAL NOTES

1. NOT ALL SYMBOLS ON THIS SHEET ARE NECESSARILY USED AS PART OF THIS PROJECT. REFER TO THE PLANS, ELEVATIONS, SECTIONS, SCHEDULES, DETAILS AND SPECIFICATIONS TO DETERMINE THE SCOPE OF WORK.
2. THE WORK, INCLUDING MATERIALS, METHODS, ASSEMBLIES, ETC., SHALL COMPLY WITH THE MINIMUM REQUIREMENTS OF THE GOVERNING LAWS, ORDINANCES, AND REGULATIONS OF ALL FEDERAL, STATE, DISTRICT, AND LOCAL AUTHORITIES HAVING JURISDICTION OVER THE PROJECT. NO PART OF THE CONTRACT DOCUMENTS MAY BE CONSTRUED TO REQUIRE OR PERMIT WORK CONTRARY TO A GOVERNING LAW, ORDINANCE, OR REGULATION. IMMEDIATELY UPON RECOGNIZING SUCH, THE CONTRACTOR SHALL REPORT TO THE OWNER ANY WORK THAT IS IN APPARENT CONFLICT WITH APPLICABLE CODES.
3. THE WORK INCLUDES, BUT IS NOT LIMITED TO, THE ITEMS OUTLINED IN THESE CONSTRUCTION DOCUMENTS AS WELL AS ALL INCIDENTAL ITEMS REQUIRED TO PROVIDE COMPLETE AND OPERATIONAL SYSTEMS. WHERE REFERENCE IS MADE TO A REQUIREMENT THAT EXCEEDS MINIMUM CODE/STANDARD REQUIREMENTS, THE CONSTRUCTION DOCUMENT REQUIREMENTS SHALL TAKE PRECEDENCE.
4. THESE DRAWINGS ARE TO BE USED IN CONJUNCTION WITH THE TELECOMMUNICATIONS SPECIFICATIONS AND OWNER'S REQUIREMENTS. ANY DISCREPANCY BETWEEN THE DRAWINGS AND THE SPECIFICATIONS SHALL BE REPORTED FOR RESOLUTION TO THE OWNER OR OWNER'S REPRESENTATIVE PRIOR TO INSTALLATION, WHERE QUANTITIES DIFFER BETWEEN DRAWINGS AND SPECIFICATIONS, THE HIGHER COUNT BETWEEN EACH SHALL PREVAIL.
5. THE TELECOMMUNICATIONS DRAWINGS ARE PART OF A LARGER SET OF DRAWINGS. THE WORK DESCRIBED BY THE DRAWINGS OF ANY ONE DISCIPLINE MAY BE AFFECTED BY THE WORK AND REQUIREMENTS DESCRIBED ON DRAWINGS OF ANOTHER DISCIPLINE AND MAY REQUIRE REFERENCE TO THE DRAWINGS OF ANOTHER DISCIPLINE. CONTRACTOR IS RESPONSIBLE FOR COORDINATING WITH OTHER DISCIPLINES/TRADES WITHIN THE FIELD TO DETERMINE HARMONIOUS ROUTING AND ALIGN CABLING TERMINATION WITH FIT AND FINISHES OF THE CONSTRUCTION.
6. THE ARCHITECTURAL DRAWINGS ESTABLISH AND COORDINATE THE FINISHED APPEARANCE AND EXACT LOCATION OF EXPOSED ELEMENTS OF THE WORK, INCLUDING THAT WORK THAT IS ILLUSTRATED PRIMARILY THROUGH THESE DRAWINGS. CABLING LOCATIONS SHOWN ON THESE DRAWINGS ARE DIAGRAMMATIC. REFER TO ARCHITECTURAL DRAWINGS FOR DIMENSIONED LOCATIONS AND ALIGNMENTS.
7. COORDINATE EXACT MOUNTING LOCATIONS AND HEIGHTS OF ALL DEVICES MOUNTED TO, AS WELL AS PENETRATION POINTS AND DETAILS FOR CABLE ROUTING, WITH THE ARCHITECT. CONTRACTOR SHALL MAKE EFFORT TO RESPECT THE SYMMETRY OF THE STRUCTURE WHEN LOCATING DEVICES. OBTAIN APPROVAL OF EXACT DEVICE LOCATIONS WITH ARCHITECT PRIOR TO ROUGH-IN.
8. CONTRACTOR SHALL NOT NOTCH, CUT OR BORE ANY STRUCTURAL MEMBER WITHOUT PRIOR WRITTEN APPROVAL FROM THE ARCHITECT AND STRUCTURAL ENGINEER.
9. THE CONTRACTOR SHALL MAINTAIN A COPY OF THE SPECIFICATIONS AND DRAWINGS AT THE JOB SITE, SHALL MAINTAIN DAILY MARKUPS OF ACTUAL INSTALLATION TO ACCURATELY RECORD FIELD CONDITIONS, AND SHALL PRESENT FOR REVIEW UPON REQUEST.
10. PRIOR TO PERFORMING WORK, IMMEDIATELY NOTIFY THE OWNER, OWNER'S REPRESENTATIVE, IN WRITING, OF OBSERVATIONS OR CONDITIONS DISCOVERED THAT WOULD PREVENT INSTALLATION ACCORDING TO DRAWINGS AND SPECIFICATIONS.
11. PREPARE A SET OF MARKED UP PLANS FOR OWNER'S OR OWNER'S REPRESENTATIVE'S APPROVAL PRIOR TO PRODUCTION OF AS-BUILT DRAWINGS FOR RECORD DOCUMENTATION.
12. PATHWAYS AND CONDUIT
    - A. INSTALL EQUIPMENT, DEVICES AND PATHWAYS, SUCH THAT CABLE TRAY, RUNWAY, CONDUITS, CABLE HANGERS, AND PULL BOXES, ETC. ADHERE TO STATE AND LOCAL CODES AND REGULATORY REQUIREMENTS FOR SEISMIC BRACING.
    - B. INSTALL CONDUIT PATHWAYS PER TIA/EIA-569-LATEST EDITION AND BICSI (BUILDING INDUSTRY CONSULTING SERVICES INTERNATIONAL) TDMM (TELECOMMUNICATIONS DISTRIBUTION METHODS MANUAL) LATEST EDITION.
    - C. CONDUIT ROUTING, WHERE SHOWN ON DRAWINGS, IS DIAGRAMMATIC IN NATURE. CONTRACTOR TO DETERMINE CONDUIT ROUTES TO SUIT FIELD CONDITIONS WHILE CONFORMING TO SPECIFICATIONS.
    - D. CONTRACTOR TO PREPARE SHOP DRAWINGS SHOWING EXACT CONDUIT ROUTES AND INDICATING PENETRATION TYPES.
    - E. COORDINATE REQUIREMENTS AND ROUTING WITH OTHER TRADES.
    - F. ROUTE CONDUIT, CABLE TRAYS AND OTHER PATHWAYS PERPENDICULAR OR PARALLEL TO BUILDING LINES IN GENERAL.
    - G. ROUTE TELECOMMUNICATIONS CABLES NO LESS THAN 6 INCHES FROM ANY POWER SOURCE OR FLORESCENT LIGHTING FIXTURE AND NO LESS THAN 4 FEET FROM ANY TRANSFORMER OR MOTOR.
    - H. CONDUITS WITH A 2" INSIDE DIAMETER OR LESS WILL HAVE A BEND RADIUS OF 6 TIMES THE INSIDE DIAMETER. CONDUITS WITH LARGER THAN 2" INSIDE DIAMETER WILL HAVE A BEND RADIUS OF 10 TIMES THE INSIDE DIAMETER.
    - I. CONDUIT RUNS SHALL NOT EXCEED 180 DEGREES OR TWO 90 DEGREE BENDS WITHOUT AN APPROPRIATE NEMA RATED PULL BOX OR/AND ADDITIONAL BEND OF UP TO 90 DEGREES, UNLESS LAST BEND IS WITHIN 12 INCHES OF THE CONDUIT END.
    - J. PROPERLY FIRE SEAL CONDUIT AND RACEWAY PENETRATIONS THROUGH FIRE RATED WALLS AND FLOORS TO MAINTAIN THE FIRE SEPARATION RATING. PROVIDE FIRE SEALING ASSEMBLIES THAT ARE UL LISTED FOR THE APPLICATION. COORDINATE REQUIREMENTS WITH LOCAL FIRE MARSHALL PRIOR TO INSTALLATION. DO NOT MIX PRODUCT BETWEEN MANUFACTURED ASSEMBLIES.
    - L. PROVIDE EXPANSION/DEFECTION FITTINGS FOR CONDUITS AT STRUCTURAL EXPANSION JOINT CROSSINGS.
    - M. PROVIDE PLASTIC BUSHING ON EXPOSED END OF ALL CONDUIT AND SLEEVES, WHETHER VISIBLE OR NOT.
    - N. ALL SLEEVES SHALL BE FILED CLEAN, DEBURRED, CAPPED, LABELED AND FURNISHED WITH A MEASURED PULL TAPE BY THE CONTRACTOR.
    - O. ALL CONDUIT STUBS ARE TO BE LOCATED PAST SOFFITS, HARD LID CEILING AND INACCESSIBLE AREAS.
    - P. PROVIDE MINIMUM 1 INCH SIZE CONDUIT FOR HORIZONTAL DISTRIBUTION AND TELECOMMUNICATIONS. CONSOLIDATION OF CONDUITS IS ALLOWED WHEN EQUAL OR GREATER CONSOLIDATED AREA IS PROVIDED. REFERENCE CONDUIT SIZING TABLES ON THE DETAILS SHEET WITHIN THIS DRAWING SET.
    - Q. PROVIDE DEDICATED CONDUIT STUB PER TELECOMMUNICATIONS DEVICE BACK BOX. DAISY-CHAINING DEVICE BOXES IS PROHIBITED UNLESS SPECIFICALLY NOTED ON FLOOR PLANS.
    - R. PROVIDE A PULL STRING IN EMPTY/UNUSED DISTRIBUTION CONDUITS AND CONDUITS SERVING TELECOMMUNICATIONS DEVICES SUITABLE FOR A 200LB PULL TENSION MINIMUM.
    - S. IN AREAS NOT SUPPLIED WITH CONDUIT OR CABLE TRAY, PROVIDE DEDICATED SUPPORT (E.G. J-HOOKS) FOR CABLE SUPPORT HANGERS (OR SIMILAR PATHWAY COMPONENTS) INTENDED FOR TELECOMMUNICATIONS CABLES A MINIMUM OF EVERY 4 FEET.
    - T. DO NOT SHARE SUPPORT WITH OTHER TRADES/SYSTEMS PROVIDE AN INDEPENDENT PATHWAY TO SECURITY PANEL FOR ALL ACCESS CONTROL DEVICES.
    - U. PROVIDE TELECOMMUNICATION CONDUITS FOR CABLING ROUTED THROUGH NON-ACCESSIBLE SPACE (E.G. "HARD LID CEILING). SIZE CONDUITS TO MAINTAIN A FILL CAPACITY OF NO MORE THAN 40% (INCLUDING A 50% SPARE CAPACITY).
    - V. ALL OUTLETS AND DEVICES SHALL BE FLUSH WITH THE WALL, FLOOR FINISHED OR CEILING FINISHED UNLESS OTHERWISE NOTED.
    - W. ALL HORIZONTAL PATHWAYS SHALL BE ROUTED SUCH THAT THE TOTAL HORIZONTAL END TO END CABLE LENGTHS SHALL NOT EXCEED 295 FEET. IF THIS REQUIREMENT CANNOT BE MET NOTIFY THE OWNER OR OWNER'S REPRESENTATIVE PRIOR TO INSTALLATION.
    - X. WHEN PENETRATING THE SLAB, CONDUITS/SLEEVES SHALL BE TERMINATED 3 INCHES ABOVE THE FINISHED SLAB/FLOOR, AT MINIMUM.
    - Y. ALL CABLE PATHWAYS SHALL BE CONCEALED IN WALLS AND FLOOR SPACES WHERE POSSIBLE UNLESS OTHERWISE NOTED.
14. INSTALL TELECOMMUNICATIONS DEVICES AT HEIGHTS NOTED AFTER VERIFYING ALL DETAILS WITH ARCHITECT AND CONTRACTOR THAT IS INSTALLING SUPPORTED DEVICES. MOUNTING HEIGHTS SHOWN ARE FROM FINISHED FLOOR TO THE CENTERLINE OF THE BACK BOX. VERIFY HEIGHTS ARE THE SAME AS ACCOMPANYING POWER RECEPTACLES WHEN APPROPRIATE AND NOTIFY OWNER, OR OWNER'S REPRESENTATIVE OF ANY DISCREPANCY.
15. PROVIDE A 24" MINIMUM SEPARATION BETWEEN "BACK-TO-BACK" TELECOMMUNICATIONS, POWER OR SIGNAL DEVICES IN FRAMED WALLS.
16. CABLES SHALL ONLY SUPPORTED BY APPARATUS MEANT TO DO SO. DO NOT SUPPORT CABLES ON PLUMBING PIPES, ELECTRICAL CONDUITS OR MECHANICAL DUCTWORK. WHEN J-HOOKS CAN NOT BE ATTACHED TO THE WALL OR STRUCTURAL MEMBERS, PROVIDE NEW 12 GAUGE CEILING HANGER WIRES TO SUPPORT J-HOOKS, INDEPENDENT OF T-BAR HANGER WIRES AND LIGHTING HANGER WIRES. DO NOT TIE CABLES TO OTHER STRUCTURES NOT INTENDED FOR THIS SPECIFIC USE.
17. GROUP AND DRESS EXPOSED TELECOMMUNICATIONS CABLES USING REUSABLE 1 /2 INCH MINIMUM WIDTH HOOK AND LOOP TYPE CABLE WRAPS. PLASTIC ZIP TIE WRAPS ARE NOT ALLOWED.
18. ANY POWER RECEPTACLES, SWITCHES AND ETC. SHOWN ON THESE DRAWINGS ARE FOR INFORMATION ONLY. PLEASE REFER TO ELECTRICAL DRAWINGS FOR ACTUAL QUANTITIES, TYPES AND LOCATIONS.
19. MDF/IDF REQUIREMENTS OF ALL TRADES
    - A. COMPONENTS NOT RELATED TO THE SUPPORT OF THE TELECOMMUNICATIONS ROOM(S) FUNCTION (E.G. PIPING, DUCTWORK, PNEUMATIC TUBING, ETC.) SHALL NOT BE INSTALLED IN, PASS THROUGH, OR ENTER THE TELECOMMUNICATIONS ROOM.
    - B. COMPONENTS CONTAINING LIQUID MUST BE LOCATED OUTSIDE THE TELECOMMUNICATION ROOM(S) WHEN POSSIBLE. WHEN NOT POSSIBLE, TUBING CONTAINING LIQUIDS MUST BE ENCLOSED WITH A SPLASH GUARD AND MUST HAVE DRAINAGE THAT PREVENTS THE BUILDUP OF LIQUID WITHIN THE TELECOMMUNICATIONS ROOMS.
20. THESE DRAWINGS DO NOT INCLUDE PROVISIONS FOR OUTSIDE PLANT CABLE, CCTV, OR FULL AV NETWORK REQUIREMENTS.
    - A. OUTSIDE PLANT PATHWAY TO EXISTING ISP TELECOMMUNICATIONS VAULT WILL BE COORDINATED BY CIVIL. OUTSIDE PLANT BACKBONE CABLE NOT SHOWN IN THESE DESIGN DOCUMENTS.
    - B. SECURITY NETWORK OUTLET LOCATIONS WILL BE SHOWN ONLY ON SECURITY DRAWINGS BUT ARE INCLUDED IN THE STRUCTURED CABLING CONTRACTOR'S SCOPE.
    - C. NETWORK REQUIREMENTS FOR AV WILL BE UPDATED WHEN FULL AV DESIGN IS PROVIDED.

ICT AND STRUCTURED CABLING SYMBOLS

NETWORK DROP SYMBOL KEY & NOTES

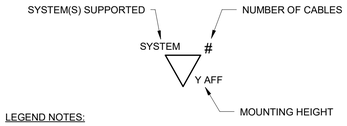

LEGEND NOTES:

1. UNLESS OTHERWISE NOTED ON THE DRAWINGS, ALL DEVICE REQUIREMENTS SHOWN ON THIS SHEET ARE STANDARD FOR ALL STRUCTURED CABLING SYMBOLS SHOWN ON THE DRAWINGS.
2. THE SYMBOL KEY SHOWN APPLIES TO ALL NETWORK DROP LOCATIONS, REGARDLESS OF MOUNTING TYPE.
3. REFER TO ARCHITECTURAL DRAWINGS FOR DIMENSIONAL LOCATION OF NETWORK DROPS. STRUCTURED CABLING DRAWINGS ARE INTENDED TO SHOW DEVICE COUNTS AND DESIGN INTENT.
4. REFER TO SPECIFICATION SHEETS FOR DEVICE REQUIREMENTS.
5. REFER TO DETAIL SHEETS IN THIS DRAWING PACKAGE FOR ADDITIONAL INFORMATION ON MOUNTING.
6. PROVIDE A COMPLEMENT OF 4-PAIR UTP CATEGORY CABLES FOR ALL STRUCTURED CABLING OUTLETS. QUANTITY OF CABLES TO MATCH THE NUMBER OF PORTS SHOWN FOR EACH OUTLET LOCATION.
7. ALL OUTLETS SHALL BE MOUNTED AT 18" AFF UNLESS OTHERWISE NOTED ON THE ARCHITECTURAL DRAWINGS.

SYSTEM LEGEND

TAG	SYSTEM DESCRIPTION
AV	AUDIOVISUAL SYSTEM
AP	WIRELESS ACCESS POINT
SA	ACCESS CONTROL CARD READER
SC	CCTV SECURITY CAMERA
W	WALL PHONE, +42" AFF
WP	WEATHER PROOF, EXTERIOR
X	X-RAY/METAL DETECTOR

SYMBOL	DESCRIPTION	INFRASTRUCTURE BOX
⧖	WALL MOUNTED NETWORK DROP	2-GANG, FLUSH MOUNTED, 2.5" DEEP BOX WITH 1-GANG PLASTER RING
⧄	FLOOR CABLE COVER INSERT	REFER TO ARCHITECTURAL AND ELECTRICAL DRAWINGS FOR FLOOR CABLE COVER DETAILS.
⧀	CEILING MOUNTED NETWORK DROP	REFER TO ICT DETAILS SHEET FOR BOX DETAILS.
▽	RACEWAY/FURNITURE MOUNTED NETWORK DROP	REFER TO ICT DETAILS SHEET FOR BOX DETAILS.
⧖	ELECTRICAL POWER POLE MOUNTED NETWORK DROP	REFER TO ELECTRICAL DETAILS FOR POWER POLE COORDINATION.

PATHWAYS AND MISC SYMBOLS LIST

SYMBOL	DESCRIPTION
TXXX #	DETAIL REFERENCE: # = DETAIL NUMBER; TXXX = DRAWING NUMBER
	CABLE TRAY
	LADDER RACK
	INFLOOR CABLING DUCT
	SLEEVE / CONDUIT END
	CONDUIT OR SLEEVE GOING UP
	CONDUIT OR SLEEVE GOING DOWN
	CONDUIT GOING THROUGH
	ON FLOOR CABLE COVER
	TELECOM SPACES/ROOM OUTLINE
TZ-TR#	TELECOM ZONE SERVED BY EITHER TR OR ER/TR # = TR (OR ER/TR) NUMBER
PB	PULL BOX
	TELECOMMUNICATIONS GROUNDING BUSBAR
TGB	TGB: TELECOM GROUNDING BUS BAR (RISER)

SYMBOL	DESCRIPTION
TMGB	TMGB: TELECOM MAIN GROUNDING BUS BAR
	GROUND
	GEC: GROUND ELECTRODE CONDUCTOR
J J	J-HOOK PATH DESIGNATOR - J-HOOKS TO BE INSTALLED WITH MAXIMUM 4'-0" SEPARATION BETWEEN EACH AND NO MORE THAN 12" OF CABLE . CABLES SHALL ONLY BE SUPPORTED BY APPARATUS MEANT TO DO SO. DO NOT SUPPORT CABLES ON PLUMBING PIPE, ELECTRICAL CONDUIT, OR MECHANICAL DUCTWORK. USE MANUFACTURER'S RECOMMENDATIONS FOR CABLE FILL PER J-HOOK. WHEN J-HOOK CAN NOT BE ATTACHED TO THE ATTIC WALL OR ATTIC STRUCTURAL MEMBERS, PROVIDE NEW 12 GAUGE CEILING HANGER WIRES TO SUPPORT J-HOOK, INDEPENDENT OF T-BAR HANGER WIRES AND LIGHTING HANGER WIRES.
	SLEEVES - 2" EMT CONDUIT UNLESS OTHERWISE NOTED. EXTEND SLEEVES PAST SOFFITS & HARD LID CEILINGS. FIELD CONDITIONS MAY VARY. SEE PATHWAY AND SLEEVES DETAILS.
	CONDUIT CONCEALED IN CEILING OR WALL
	CONDUIT CONCEALED IN FLOOR CONDUIT EXPOSED OR SURFACE MOUNTED
T T	UNDERGROUND TELECOMMUNICATION CONDUIT DUCT BANK (NOT USED)
	FLEXIBLE METALLIC CONDUIT
	LINEAR RING PATHWAY (NOT USED)
	"EZ-PATH" TYPE FIRESTOP DEVICE, NOTES INDICATES SIZE AND QUANTITY.
J	CEILING MOUNTED JUNCTION BOX

ABBREVIATIONS

SYMBOL	DESCRIPTION
AFC	ABOVE FINISHED CEILING
AFF	ABOVE FINISHED FLOOR
AP	ACCESS POINT (WIRELESS)
AV	AUDIOVISUAL
AWG	AMERICAN WIRE GAUGE
BEP	BUILDING ENTRANCE PROTECTOR
BFC	BELOW FINISHED CEILING
BLDG	BUILDING
BMS	BUILDING MANAGEMENT SYSTEM
C	CONDUIT
CAT	CATEGORY
CRAC	COMPUTER ROOM AIR CONDITIONING (UNIT)
CP	CONSOLIDATION POINT
CPP	COPPER PATCH PANEL
DAS	DISTRIBUTED ANTENNA SYSTEM
DEMARC	DEMARCATION POINT
DWG	DRAWING
EDA	EQUIPMENT DISTRIBUTION AREA
EF	ENTRANCE FACILITY
EO	EQUIPMENT OUTLET
ER	EQUIPMENT ROOM
FAS	FIRE ALARM SYSTEM
FO	FIBER OPTIC
FOPP	FIBER OPTIC PATCH PANEL
FT	FEET
HDA	HORIZONTAL DISTRIBUTION AREA
HVAC	HEATING, VENTILATION AND AIR-CONDITIONING
HWM	HORIZONTAL WIRE MANAGER
IDF	INTERMEDIATE DISTRIBUTION FRAME
IP	INTERNET PROTOCOL
IN	INCHES
KVA	KILOVOLT- AMPERE
KW	KILOWATT
LAN	LOCAL AREA NETWORK
MAX	MAXIMUM
MDA	MAIN DISTRIBUTION AREA
MDF	MAIN DISTRIBUTION FRAME
MIN	MINIMUM
MMFO	MULTIMODE FIBER OPTIC
MTD	MOUNTED
MPOE	MAIN POINT OF ENTRY
N/A	NOT APPLICABLE
NIC	NOT IN CONTRACT
NO, #	NUMBER
NTS	NOT TO SCALE

SYMBOL	DESCRIPTION
OD	OUTSIDE DIAMETER
OSP	OUTSIDE PLANT
PB	PULL BOX
PoE	POWER OVER ETHERNET
PT	POKE THRU
PVC	POLYVINYL CHLORIDE
RF	RADIO FREQUENCY
RM	ROOM
RU	RACK MOUNT UNIT
SCS	STRUCTURED CABLING SYSTEM
SMF	SINGLE-MODE FIBER OPTIC
SPEC	SPECIFICATION
STP	SHIELDED TWISTED PAIR
TBD	TO BE DETERMINED
TE	TELECOMMUNICATIONS ENCLOSURE
TGB	TELECOMMUNICATIONS GROUNDING BUSBAR
TMGB	TELECOMMUNICATIONS MAIN GROUNDING BUSBAR
TPM	TECHNICAL PROJECT MANAGER
TR	TELECOMMUNICATIONS ROOM
TV	TELEVISION
TYP	TYPICAL
UL	UNDERWRITERS LABORATORIES INCORPORATED
UON	UNLESS OTHERWISE NOTED
UPS	UNINTERRUPTIBLE POWER SUPPLY
UTP	UNSHIELDED TWISTED PAIR
VWM	VERTICAL WIRE MANAGER
WAN	WIDE AREA NETWORK
WAP	WIRELESS ACCESS POINT
WAO	WORK AREA OUTLET
WLAN	WIRELESS LOCAL AREA NETWORK
WP	WEATHER PROOF
XPP	COAXIAL PATCH PANEL

DRAWING LIST

IT DRAWING LIST

DWG NO.	DRAWING TITLE
T000	TELECOMMUNICATIONS NOTES, SYMBOLS, & ABBREVIATIONS
T201	TELECOMMUNICATIONS GROUND FLOOR PLAN - OVERALL
T201A	TELECOMMUNICATIONS LEARNING CENTER GROUND FLOOR PLAN - SOUTH
T201B	TELECOMMUNICATIONS LEARNING CENTER GROUND FLOOR PLAN - NORTH
T201C	TELECOMMUNICATIONS BOXCAR GROUND FLOOR PLAN
T202	TELECOMMUNICATIONS MEZZANINE FLOOR PLAN - OVERALL
T202A	TELECOMMUNICATIONS LEARNING CENTER MEZZ FLOOR PLAN - SOUTH
T301	TELECOMMUNICATIONS GROUND FLOOR CEILING PLAN - OVERALL
T301A	TELECOMMUNICATIONS LEARNING CENTER GROUND FLOOR CEILING PLAN - SOUTH
T301B	TELECOMMUNICATIONS LEARNING CENTER GROUND FLOOR CEILING PLAN - NORTH
T301C	TELECOMMUNICATIONS BOXCAR GROUND FLOOR CEILING PLAN
T302	TELECOMMUNICATIONS LEARNING CENTER MEZZ CEILING PLAN - OVERALL
T302A	TELECOMMUNICATIONS LEARNING CENTER MEZZ CEILING PLAN - SOUTH
T401	TELECOMMUNICATIONS ENLARGED TELECOM ROOM PLAN

NOT FOR CONSTRUCTION

09.AUG.2021

belzberg architects
2321 MAIN STREET
SANTA MONICA, CA 90405
310.453.9611
www.belzbergarchitects.com

ARUP
Arup North America Ltd.
900 Wilshire Boulevard,
19th Floor
Los Angeles CA 90017
Tel: 310 578 4400
www.arup.com

#	DESCRIPTION	DATE

HOLOCAUST MUSEUM LA EXPANSION

100 THE GROVE DRIVE
LOS ANGELES, CA 90036

TELECOMMUNICATIONS NOTES, SYMBOLS, & ABBREVIATIONS

PROJECT NUMBER: 17009

T000

08/09/21 19:14:24

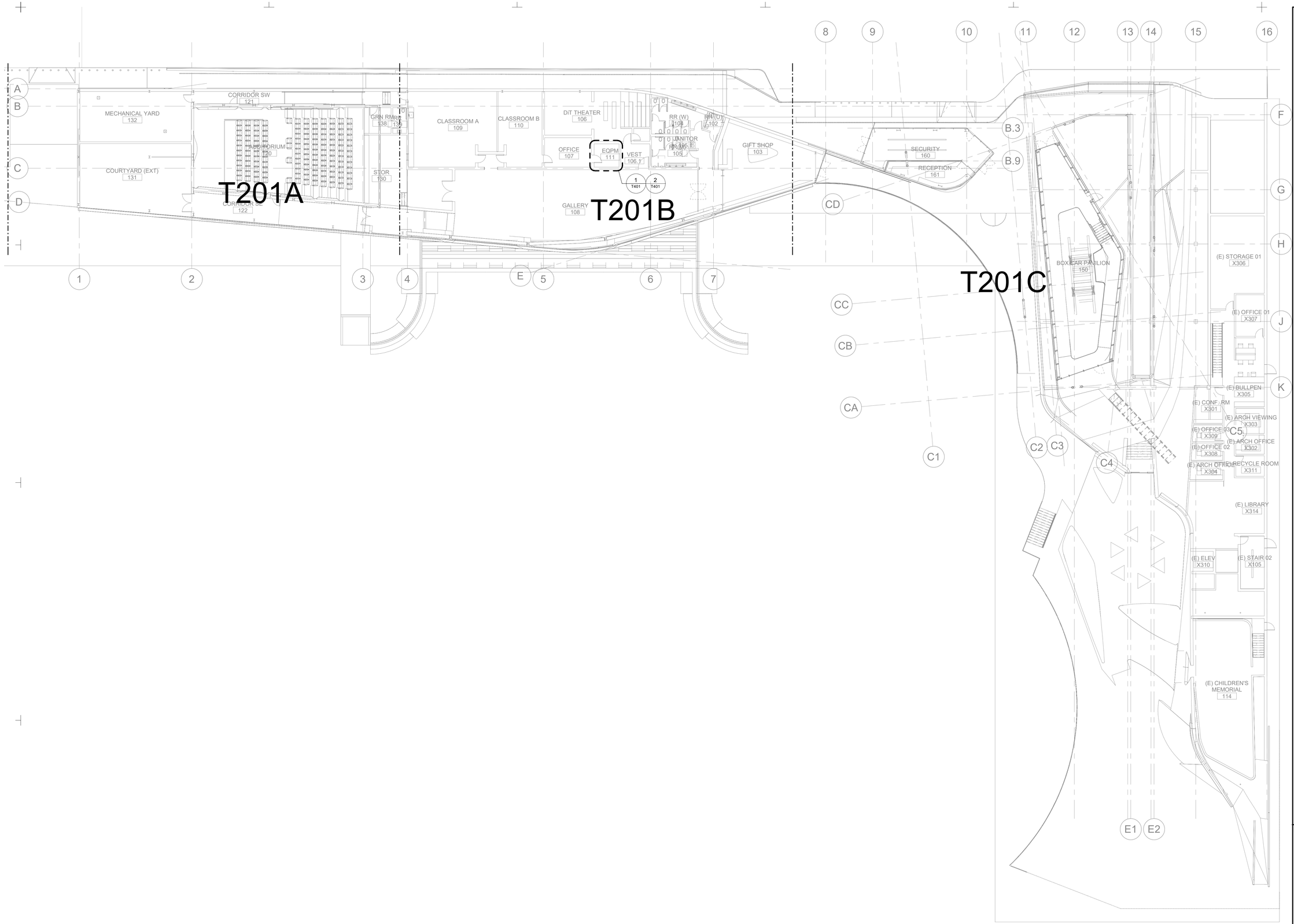

0 8' 16' 32'

SCALE: 1/16" = 1'-0"

N

NOT FOR CONSTRUCTION

09.AUG.2021

ba
belzberg architects
2321 MAIN STREET
SANTA MONICA, CA 90405
310.453.9611
www.belzbergarchitects.com

ARUP
Arup North America Ltd.
900 Wilshire Boulevard,
19th Floor
Los Angeles CA 90017
Tel: 310 578 4400
www.arup.com

#	DESCRIPTION	DATE

HOLOCAUST
MUSEUM LA
EXPANSION

100 THE GROVE DRIVE
LOS ANGELES, CA 90036

TELECOMMUNICATIONS
GROUND FLOOR PLAN
- OVERALL

PROJECT NUMBER: 17009

T201

08/09/21 19:14:34

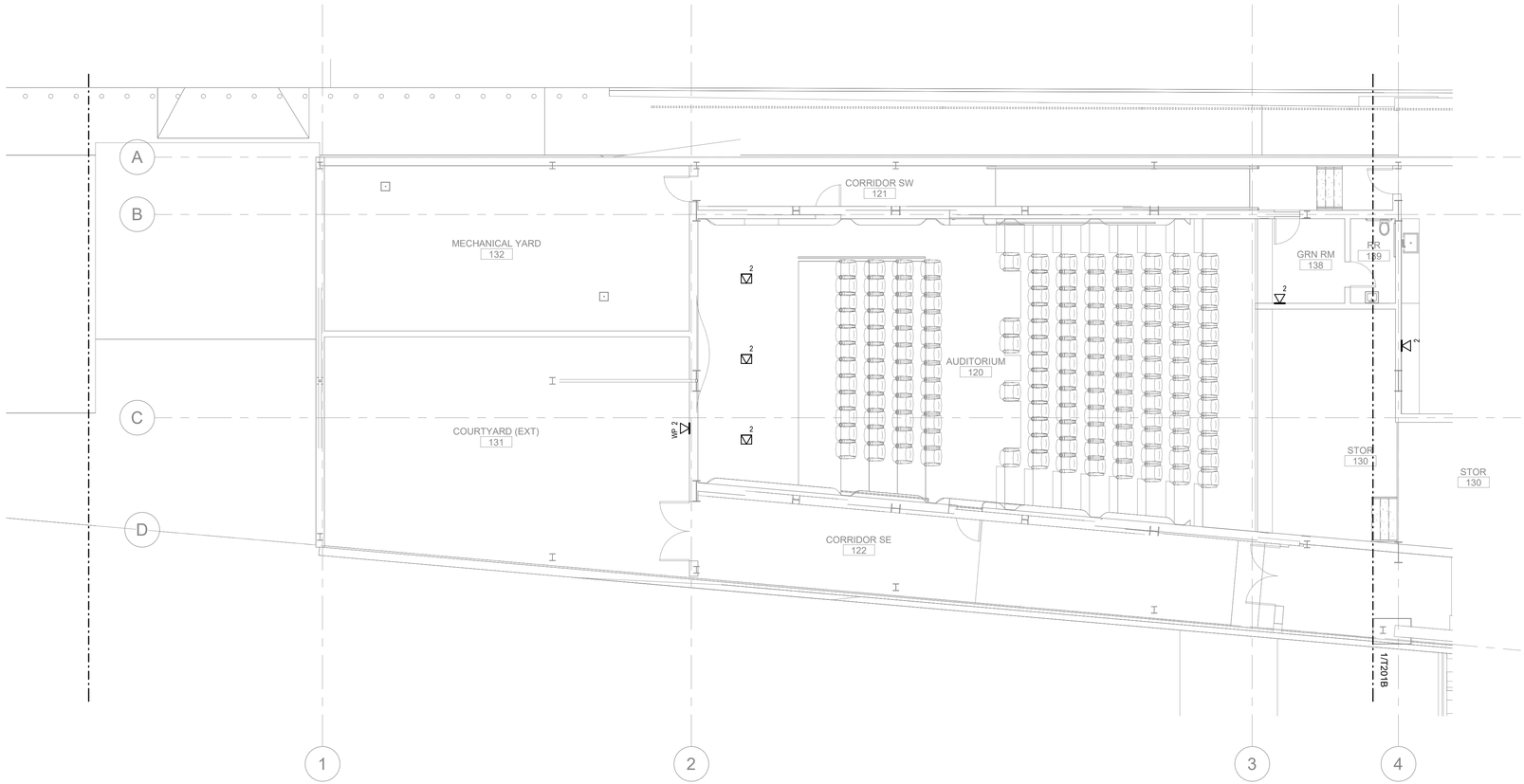

0 4' 8' 16'
SCALE: 1/8" = 1'-0"

N

NOT FOR CONSTRUCTION

09.AUG.2021

ba
belzberg architects
2321 MAIN STREET
SANTA MONICA, CA 90405
310.453.9611
www.belzbergarchitects.com

ARUP
Arup North America Ltd.
900 Wilshire Boulevard,
19th Floor
Los Angeles CA 90017
Tel: 310 578 4400
www.arup.com

#	DESCRIPTION	DATE

HOLOCAUST MUSEUM LA EXPANSION

100 THE GROVE DRIVE
LOS ANGELES, CA 90036

TELECOMMUNICATIONS LEARNING CENTER GROUND FLOOR PLAN - SOUTH

PROJECT NUMBER: 17009

T201A

08/09/21 19:14:40

SHEET NOTES:

1. OUTSIDE PLANT PATHWAY ROUTES TO EQUIPMENT ROOM (TO BE COORDINATED BY CIVIL):
   A. (2) 4" CONDUIT FROM EQUIPMENT ROOM TO EXISTING ISP TELECOMMUNICATIONS VAULT (SHOWN)
      a. FIBER AND COPPER CONNECTIONS TO BE FURNISHED AND INSTALLED BY ISP
   B. (2) 4" CONDUIT FROM EQUIPMENT ROOM TO EXISTING MDF (NOT SHOWN):
      a. INCLUDES BACKBONE CABLING (NOT SHOWN)
         - 48-STRAND OS2 (LC-LC UPC) INDOOR/OUTDOOR ARMOURED FIBER CABLE
         - 100-PAIR CAT3 UTP OUTDOOR COPPER CABLE

2. OUTSIDE PLANT REQUIREMENTS:
   A. SCHEDULE 40/80 PVC CONDUIT ENCASED IN CONCRETE
   B. MIN. 6" HORIZONTAL CLEARANCE ABOVE ANY CROSSED CONDUIT
   C. MIN. 12" VERTICAL CLEARANCE FROM ADJACENT CONDUIT
   D. DRAIN SLOPE OF 0.125" PER FOOT AWAY FROM BUILDING
   E. 40" SWEEPING BEND RADIUS

3. TELECOMMUNICATIONS VAULT REQUIREMENTS:
   A. MIN. 60" (L) X 36" (W) X 36 (D)
   B. TRAFFIC RATED, TILT-UP LID
   C. VAULTS ARE REQUIRED AT THE FOLLOWING CONDITIONS:
      a. WITHIN 50' CONDUIT LENGTH OF THE POINT OF ENTRY
      b. CONDUIT EXCEEDS 180-DEREE OF COMBINED HORIZONTAL AND VERTICAL BENDS
      c. CONDUIT EXCEEDS 300' LENGTH

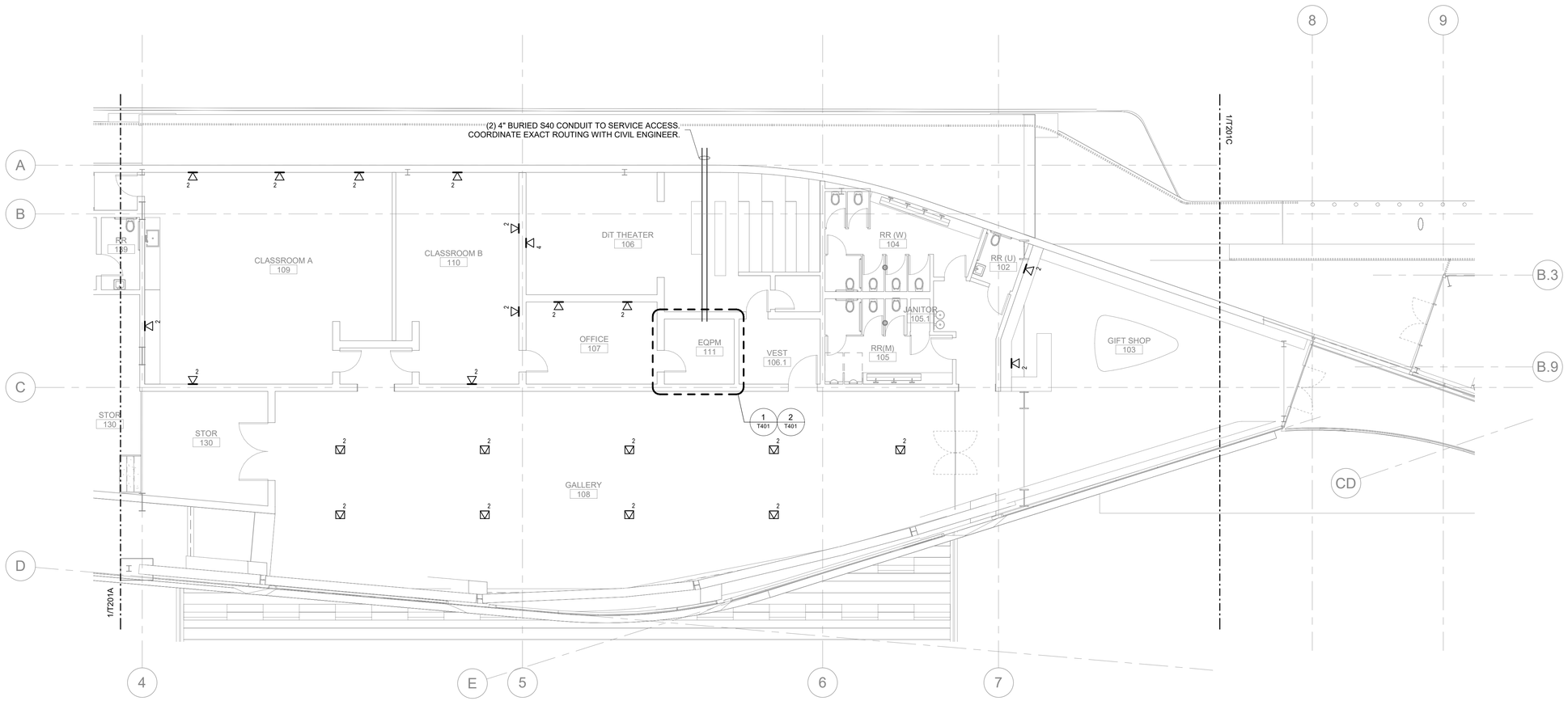

0 4' 8' 16'
SCALE: 1/8" = 1'-0"

N

NOT FOR CONSTRUCTION

09.AUG.2021

belzberg architects
2321 MAIN STREET
SANTA MONICA, CA 90405
310.453.9611
www.belzbergarchitects.com

ARUP
Arup North America Ltd.
900 Wilshire Boulevard,
19th Floor
Los Angeles CA 90017
Tel: 310 578 4400
www.arup.com

#	DESCRIPTION	DATE

HOLOCAUST MUSEUM LA EXPANSION

100 THE GROVE DRIVE
LOS ANGELES, CA 90036

TELECOMMUNICATIONS LEARNING CENTER GROUND FLOOR PLAN - NORTH

PROJECT NUMBER: 17009

T201B

08/09/21 19:14:47

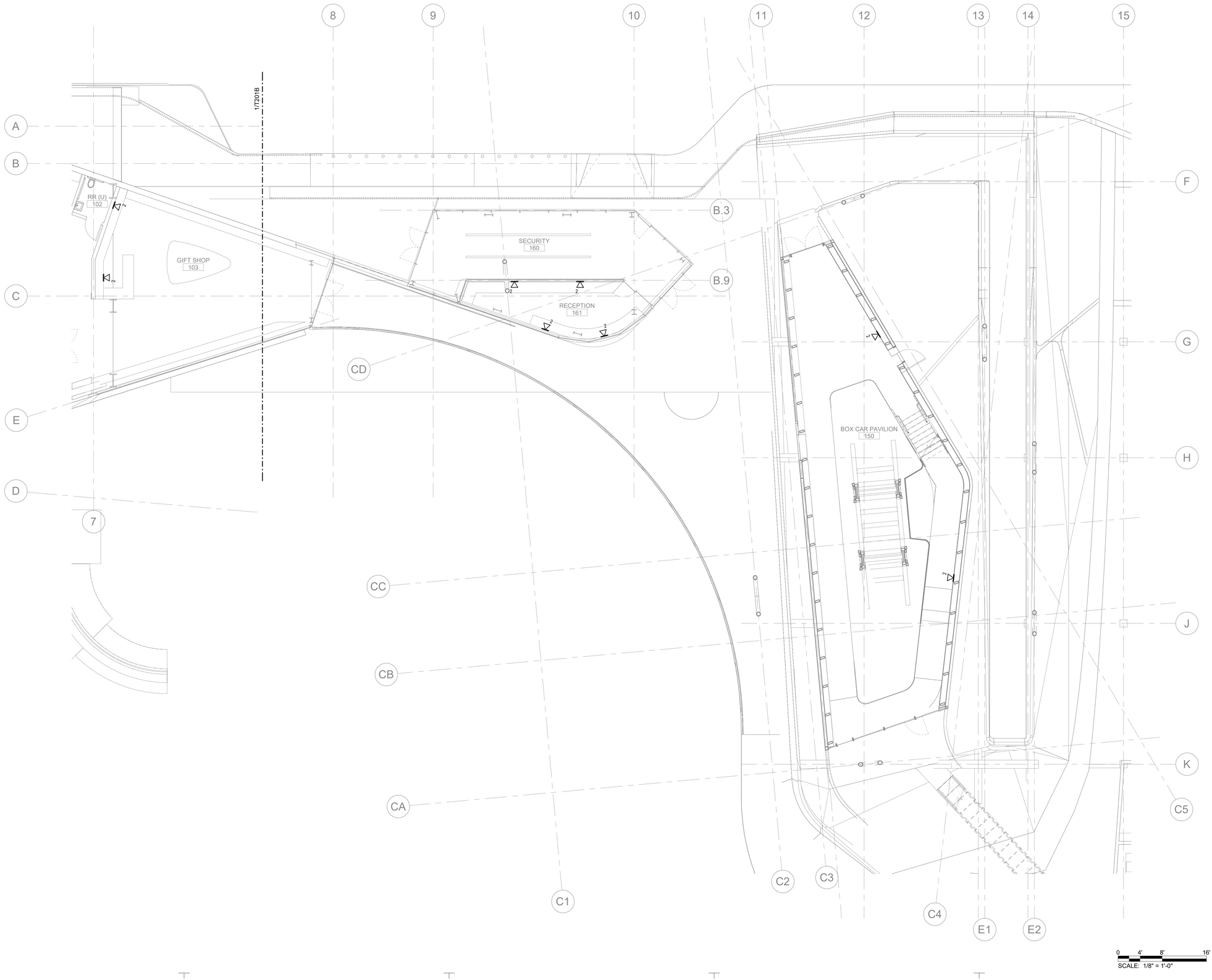

NOT FOR CONSTRUCTION

09.AUG.2021

ba
belzberg architects
2321 MAIN STREET
SANTA MONICA, CA 90405
310.453.9611
www.belzbergarchitects.com

ARUP
Arup North America Ltd.
900 Wilshire Boulevard,
19th Floor
Los Angeles CA 90017
Tel: 310 578 4400
www.arup.com

#	DESCRIPTION	DATE

HOLOCAUST MUSEUM LA EXPANSION

100 THE GROVE DRIVE
LOS ANGELES, CA 90036

TELECOMMUNICATIONS BOXCAR GROUND FLOOR PLAN

PROJECT NUMBER: 17009

T201C

08/09/21 19:14:52

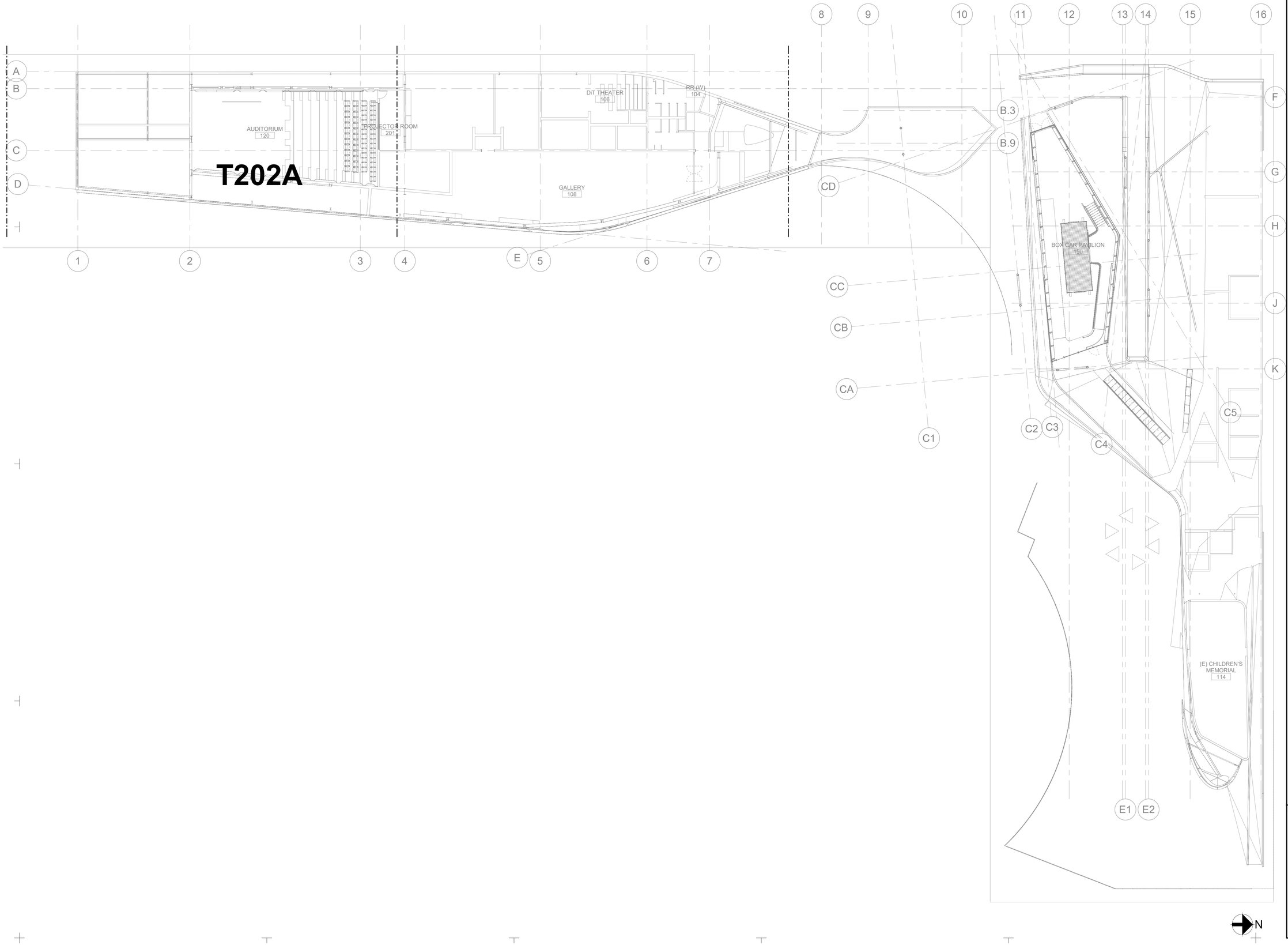

NOT FOR CONSTRUCTION

09.AUG.2021

belzberg architects
2321 MAIN STREET
SANTA MONICA, CA 90405
310.453.9611
www.belzbergarchitects.com

ARUP
Arup North America Ltd.
900 Wilshire Boulevard,
19th Floor
Los Angeles CA 90017
Tel: 310 578 4400
www.arup.com

#	DESCRIPTION	DATE

HOLOCAUST
MUSEUM LA
EXPANSION

100 THE GROVE DRIVE
LOS ANGELES, CA 90036

TELECOMMUNICATIONS
MEZZANINE FLOOR
PLAN - OVERALL

PROJECT NUMBER: 17009

T202

08/09/21 19:14:59

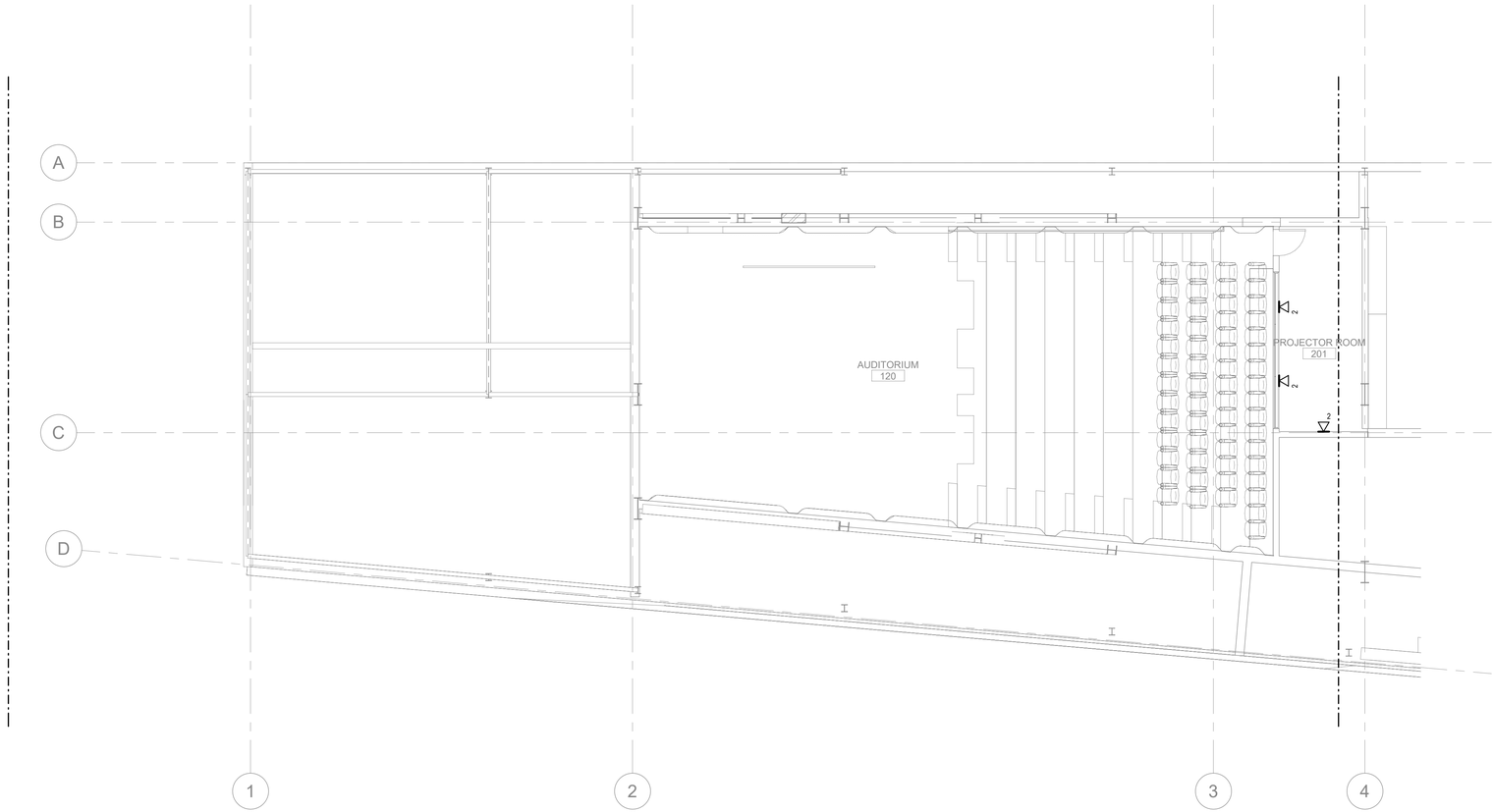

NOT FOR CONSTRUCTION

09.AUG.2021

ba
belzberg architects
2321 MAIN STREET
SANTA MONICA, CA 90405
310.453.9611
www.belzbergarchitects.com

ARUP
Arup North America Ltd.
900 Wilshire Boulevard,
19th Floor
Los Angeles CA 90017
Tel: 310 578 4400
www.arup.com

#	DESCRIPTION	DATE

HOLOCAUST MUSEUM LA EXPANSION

100 THE GROVE DRIVE
LOS ANGELES, CA 90036

TELECOMMUNICATIONS LEARNING CENTER MEZZ FLOOR PLAN - SOUTH

PROJECT NUMBER: 17009

T202A

08/09/21 19:15:03

N

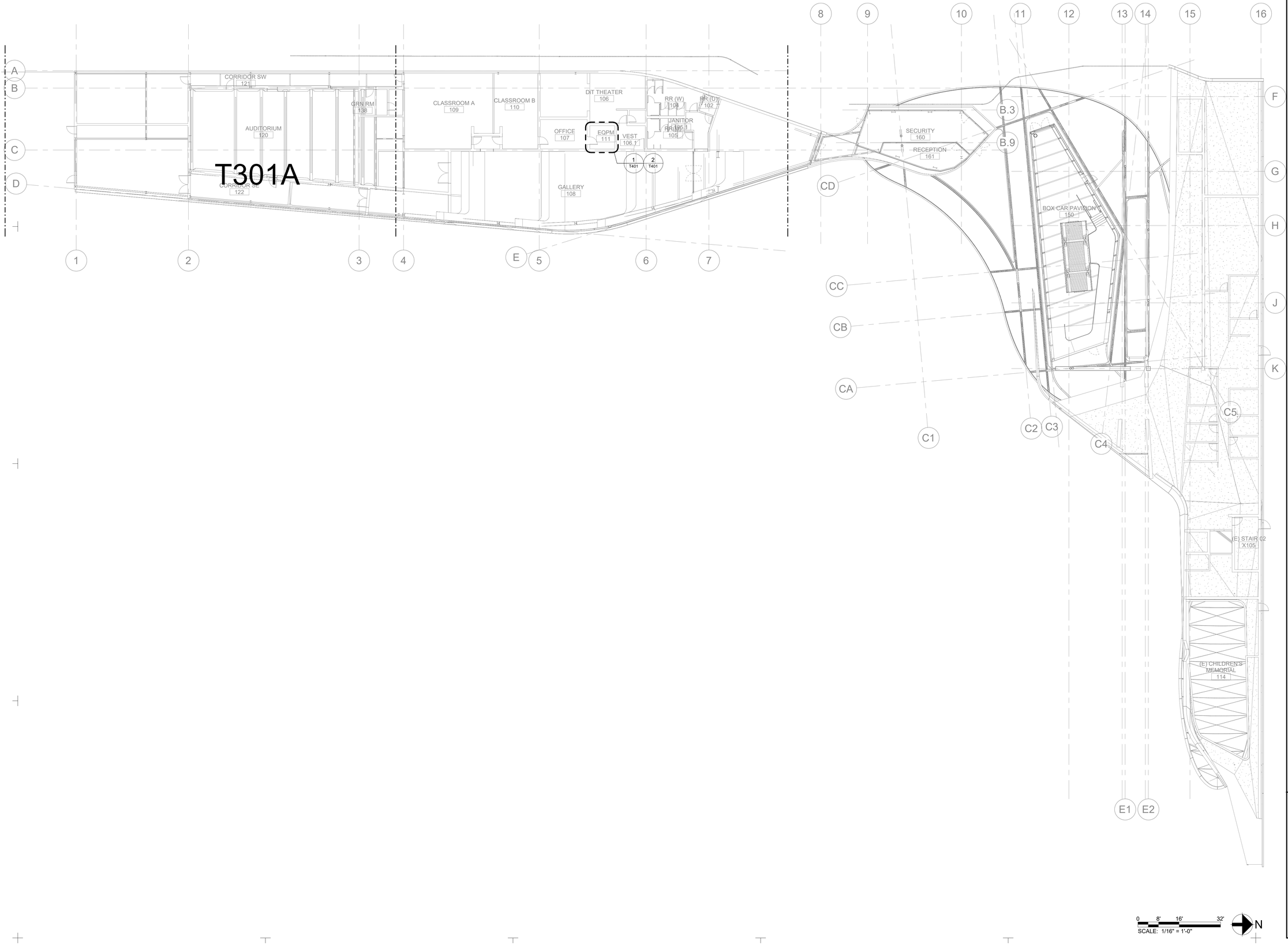

0 8' 16' 32'

SCALE: 1/16" = 1'-0"

N

NOT FOR CONSTRUCTION

09.AUG.2021

ba
belzberg architects
2321 MAIN STREET
SANTA MONICA, CA 90405
310.453.9611
www.belzbergarchitects.com

ARUP
Arup North America Ltd.
900 Wilshire Boulevard,
19th Floor
Los Angeles CA 90017
Tel: 310 578 4400
www.arup.com

#	DESCRIPTION	DATE

HOLOCAUST MUSEUM LA EXPANSION

100 THE GROVE DRIVE
LOS ANGELES, CA 90036

TELECOMMUNICATIONS GROUND FLOOR CEILING PLAN - OVERALL

PROJECT NUMBER: 17009

T301

08/09/21 19:15:10

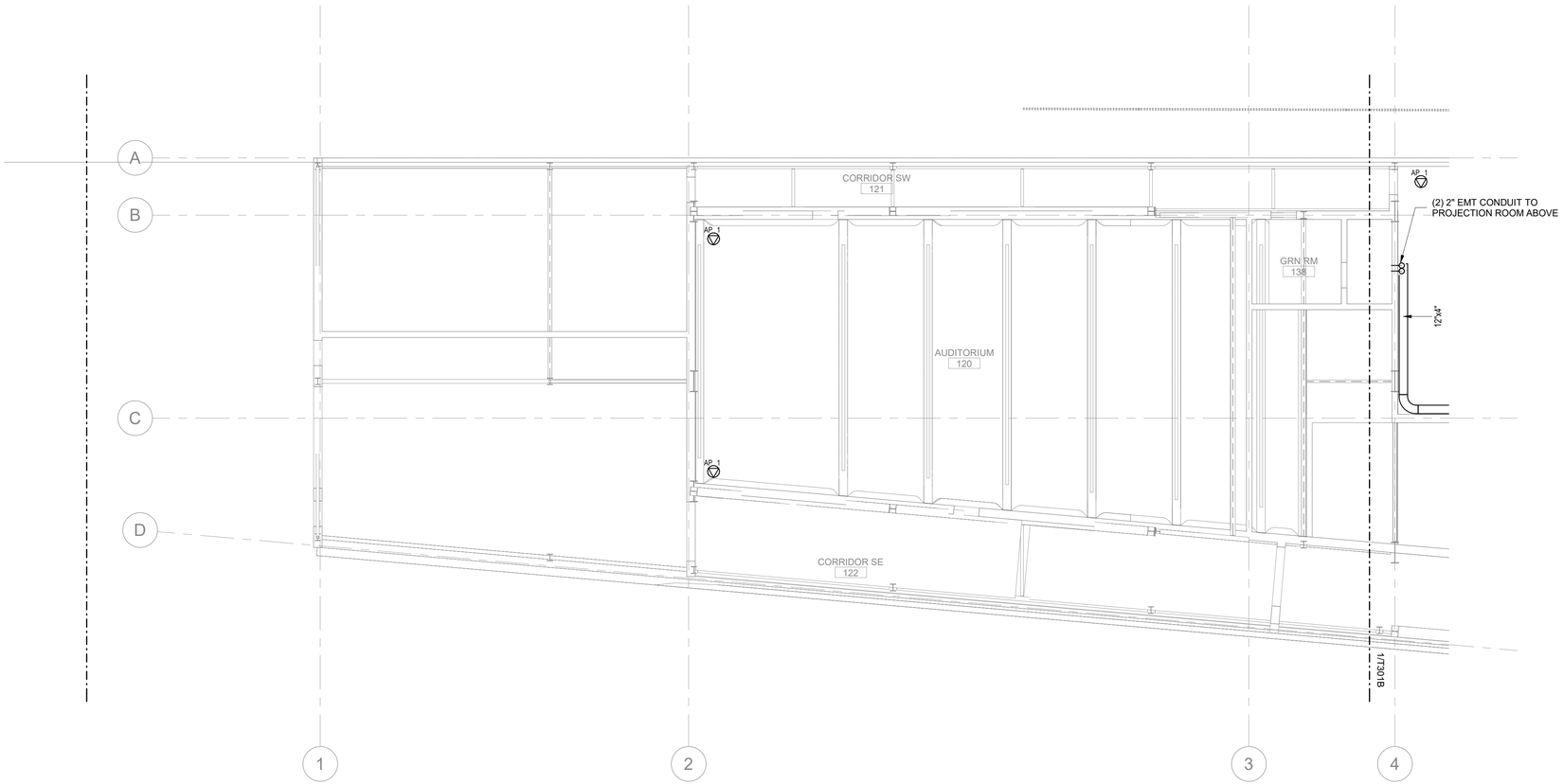

0 4' 8' 16'
SCALE: 1/8" = 1'-0"

N

NOT FOR CONSTRUCTION

09.AUG.2021

belzberg architects
2321 MAIN STREET
SANTA MONICA, CA 90405
310.453.9611

www.belzbergarchitects.com

ARUP

Arup North America Ltd.
900 Wilshire Boulevard,
19th Floor
Los Angeles CA 90017
Tel: 310 578 4400
www.arup.com

#	DESCRIPTION	DATE

HOLOCAUST MUSEUM LA EXPANSION

100 THE GROVE DRIVE
LOS ANGELES, CA 90036

TELECOMMUNICATIONS LEARNING CENTER GROUND FLOOR CEILING PLAN - SOUTH

PROJECT NUMBER: 17009

T301A

08/09/21 19:15:14

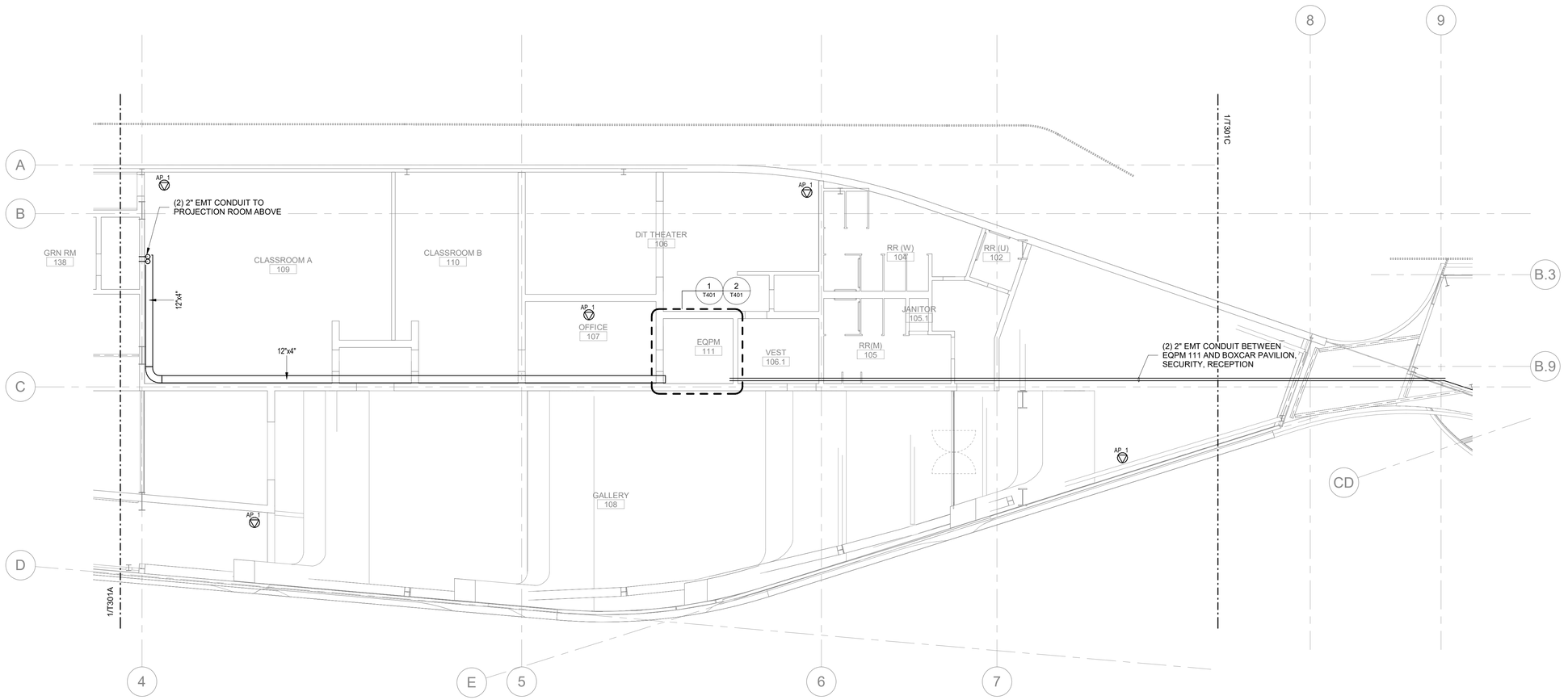

0 4' 8' 16'
SCALE: 1/8" = 1'-0"

N

NOT FOR CONSTRUCTION

09.AUG.2021

belzberg architects
2321 MAIN STREET
SANTA MONICA, CA 90405
310.453.9611
www.belzbergarchitects.com

ARUP
Arup North America Ltd.
900 Wilshire Boulevard,
19th Floor
Los Angeles CA 90017
Tel: 310 578 4400
www.arup.com

#	DESCRIPTION	DATE

HOLOCAUST MUSEUM LA EXPANSION

100 THE GROVE DRIVE
LOS ANGELES, CA 90036

TELECOMMUNICATIONS LEARNING CENTER GROUND FLOOR CEILING PLAN - NORTH

PROJECT NUMBER: 17009

T301B

08/09/21 19:15:19

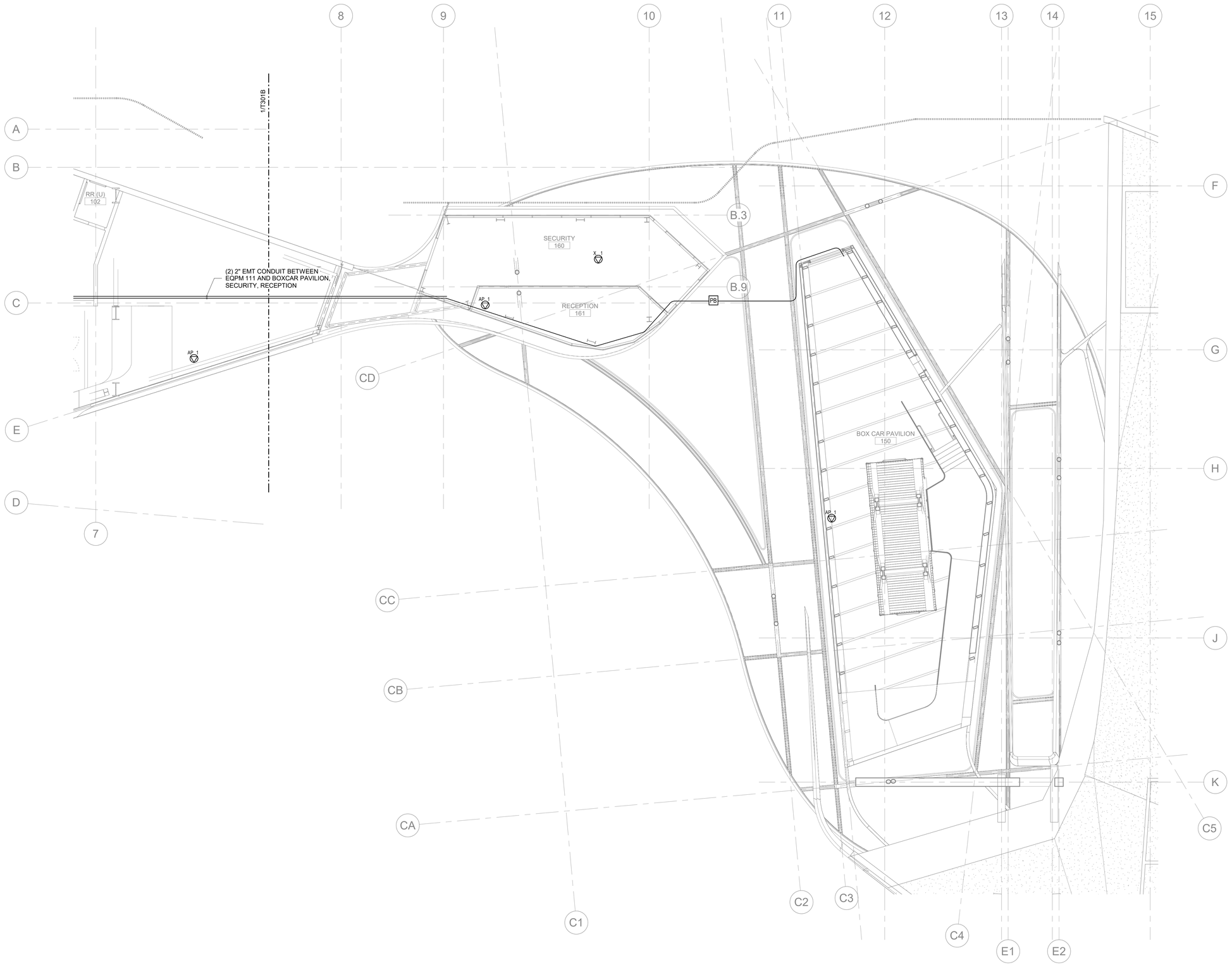

NOT FOR CONSTRUCTION

09.AUG.2021

ba
belzberg architects
2321 MAIN STREET
SANTA MONICA, CA 90405
310.453.9611
www.belzbergarchitects.com

ARUP
Arup North America Ltd.
900 Wilshire Boulevard,
19th Floor
Los Angeles CA 90017
Tel: 310 578 4400
www.arup.com

#	DESCRIPTION	DATE

HOLOCAUST MUSEUM LA EXPANSION

100 THE GROVE DRIVE
LOS ANGELES, CA 90036

TELECOMMUNICATIONS BOXCAR GROUND FLOOR CEILING PLAN

PROJECT NUMBER: 17009

T301C

08/09/21 19:15:24

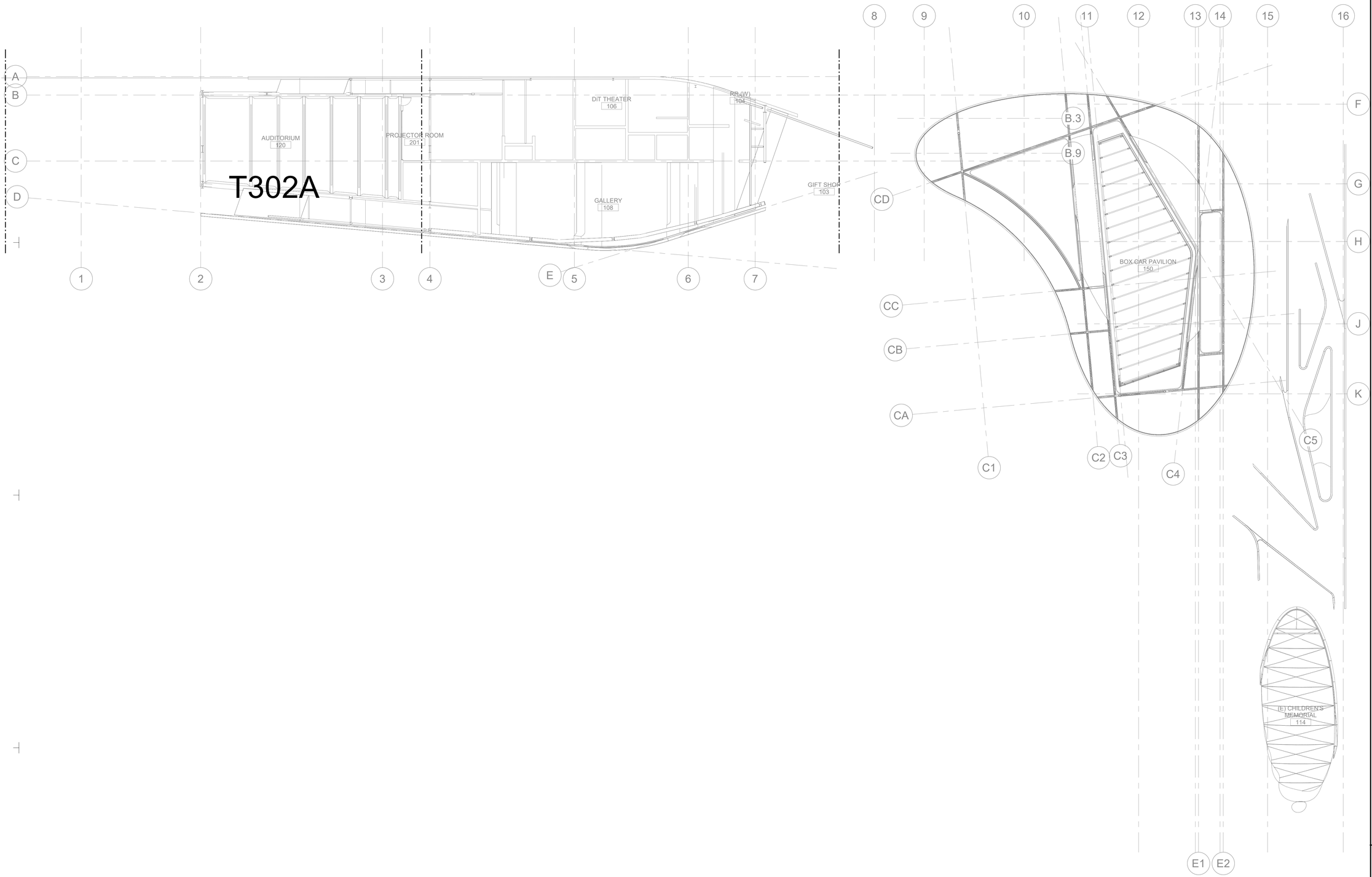

0 8' 16' 32'

SCALE: 1/16" = 1'-0"

N

NOT FOR CONSTRUCTION

09.AUG.2021

ba
belzberg architects
2321 MAIN STREET
SANTA MONICA, CA 90405
310.453.9611
www.belzbergarchitects.com

ARUP
Arup North America Ltd.
900 Wilshire Boulevard,
19th Floor
Los Angeles CA 90017
Tel: 310 578 4400
www.arup.com

#	DESCRIPTION	DATE

HOLOCAUST MUSEUM LA EXPANSION

100 THE GROVE DRIVE
LOS ANGELES, CA 90036

TELECOMMUNICATIONS LEARNING CENTER MEZZ CEILING PLAN - OVERALL

PROJECT NUMBER: 17009

T302

08/09/21 19:15:30

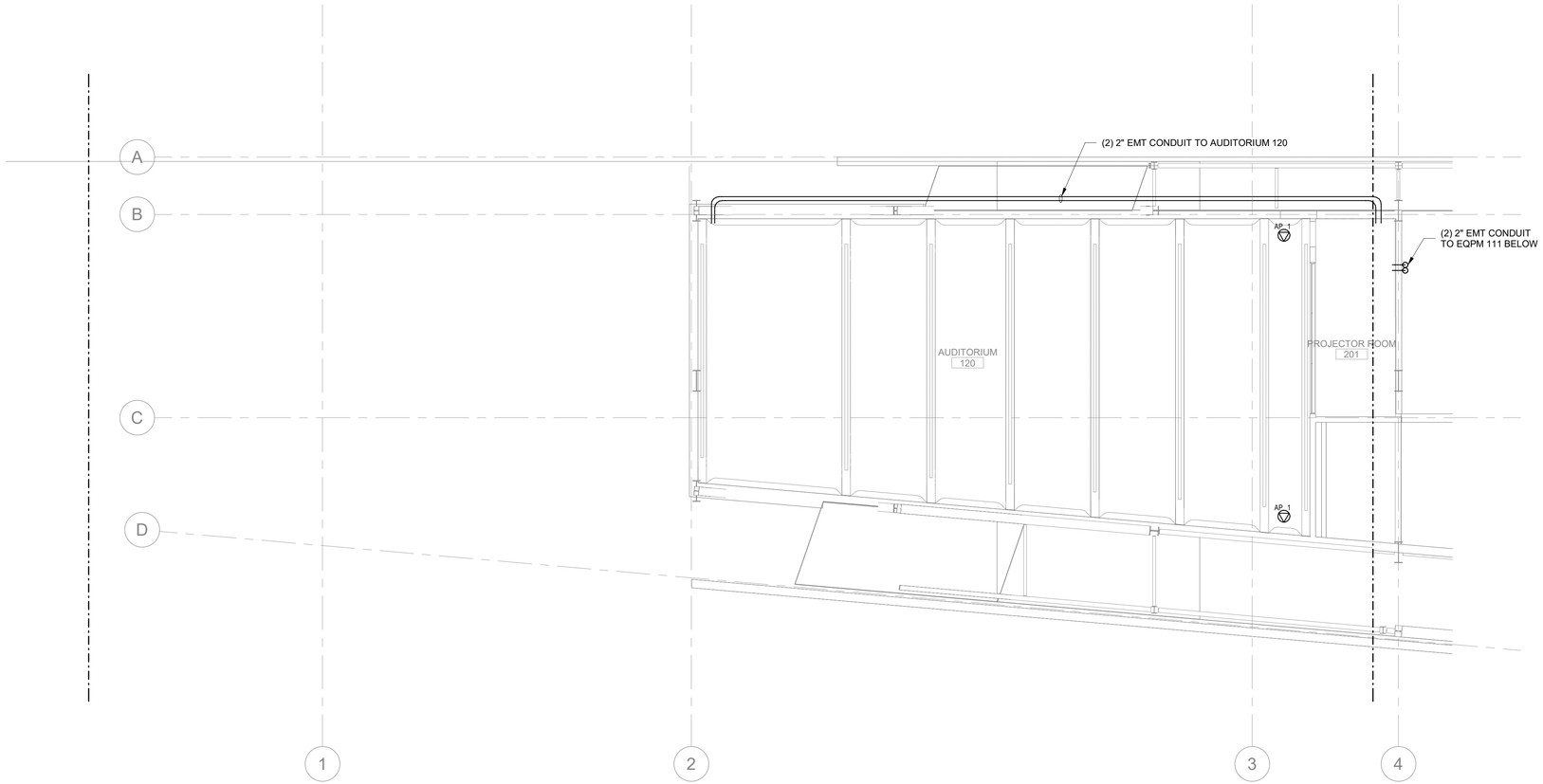

0 4' 8' 16'
SCALE: 1/8" = 1'-0"

N

NOT FOR CONSTRUCTION

09.AUG.2021

belzberg architects
2321 MAIN STREET
SANTA MONICA, CA 90405
310.453.9611
www.belzbergarchitects.com

ARUP
Arup North America Ltd.
900 Wilshire Boulevard,
19th Floor
Los Angeles CA 90017
Tel: 310 578 4400
www.arup.com

#	DESCRIPTION	DATE

HOLOCAUST MUSEUM LA EXPANSION

100 THE GROVE DRIVE
LOS ANGELES, CA 90036

TELECOMMUNICATIONS LEARNING CENTER MEZZ CEILING PLAN - SOUTH

PROJECT NUMBER: 17009

T302A

08/09/21 19:15:34

OUTLET DESIGN SCHEDULE

Outlet Type	System ID	Count	Number of Ports	Cable Counts Category 6A	Mounting Type	Level	To Closet
WIRELESS ACCESS POINT OUTLET	AP	9	9	9	Ceiling Mount	01 GALLERY	EQPM 111
X-RAY/DETECTOR OUTLET	X	1	1	1	Ceiling Mount	01 GALLERY	EQPM 111
STANDARD DATA OUTLET		12	24	24	Floor Mount	01 GALLERY	EQPM 111
STANDARD DATA OUTLET		20	40	40	Wall Mount	01 GALLERY	EQPM 111
EXTERIOR WEATHERPROOF DATA OUTLET	WP	1	2	2	Wall Mount	01 GALLERY	EQPM 111
STANDARD DATA OUTLET		1	4	4	Wall Mount	01 GALLERY	EQPM 111
STANDARD DATA OUTLET		3	6	6	Wall Mount	02 MEZZANINE	EQPM 111
Grand total: 47		47	86	86			

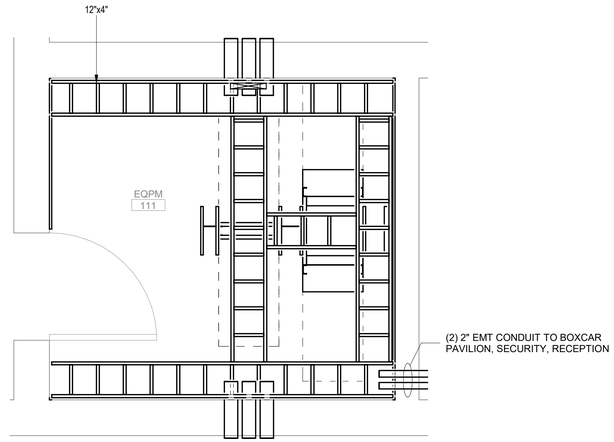

2 EQPM ROOM 111 - ENLARGED OVERHEAD PLAN
1/2" = 1'-0"

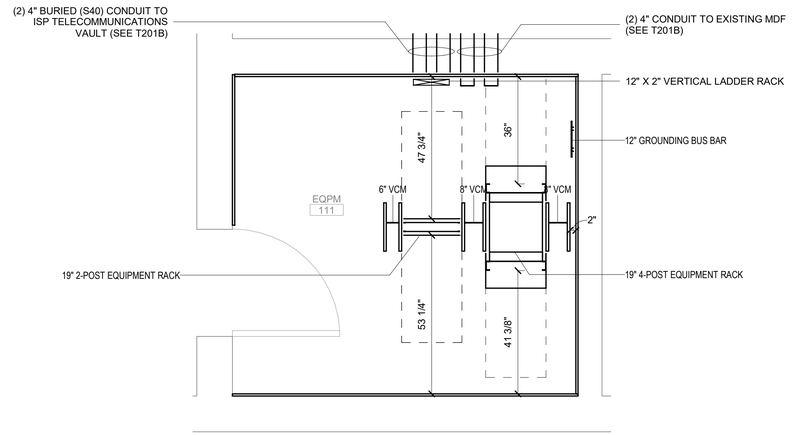

1 EQPM ROOM 111 - ENLARGED PLAN
1/2" = 1'-0"

0 1' 2' 4'
SCALE: 1/2" = 1'-0"

N

NOT FOR CONSTRUCTION

09.AUG.2021

belzberg architects
2321 MAIN STREET
SANTA MONICA, CA 90405
310.453.9611
www.belzbergarchitects.com

ARUP
Arup North America Ltd.
900 Wilshire Boulevard,
19th Floor
Los Angeles CA 90017
Tel: 310 578 4400
www.arup.com

#	DESCRIPTION	DATE

HOLOCAUST MUSEUM LA EXPANSION

100 THE GROVE DRIVE
LOS ANGELES, CA 90036

TELECOMMUNICATIONS ENLARGED TELECOM ROOM PLAN

PROJECT NUMBER: 17009

T401

08/09/21 19:15:37

REPORT OF GENERAL MANAGER APPROVED MAY 16 2007 NO. 07-111

DATE May 16, 2007 BOARD OF RECREATION and PARK COMMISSIONERS C.D. 4

BOARD OF RECREATION AND PARK COMMISSIONERS

SUBJECT: PAN PACIFIC PARK – LEASE AGREEMENT WITH THE LOS ANGELES MUSEUM OF THE HOLOCAUST FOR THE USE OF A PORTION OF PAN PACIFIC PARK FOR THE CONSTRUCTION AND OPERATION OF A HOLOCAUST MUSEUM

R. Adams	_____	J. Kolb	_____
J. Combs	_____	F. Mok	_____
H. Fujita	_____	K. Regan	_____
S. Huntley	_____	*M. Shull	_____

General Manager

Approved ✓ Disapproved _____ Withdrawn _____

RECOMMENDATION:

That the Board:

1. Review and consider the Initial Study and Mitigated Negative Declaration (IS/MND) and the associated Mitigation Monitoring Reporting Plan (MMRP)(Section VII) for the Los Angeles Museum of the Holocaust (Holocaust Museum) at Pan Pacific Park, finding that on the basis of the whole record, including the IS/MND and all comments received, there is no substantial evidence that the project will have a significant environmental effect on the environment, and that all potentially significant environmental effects of the project have been properly disclosed and evaluated in the IS/MND in compliance with the California Environmental Quality Act (CEQA) and the State and City CEQA Guidelines and reflects the Department of Recreation and Parks' independent judgment and analysis;

2. Recommend that the City Council review, consider and adopt the IS/MND and MMRP (Section VII), with Council making the same findings as the Board, and that Department staff file a Notice of Determination with the Los Angeles City Clerk and the Los Angeles County Clerk within five days of Council's adoption;

3. Approve the proposed relocation of the Los Angeles Museum of the Holocaust (Holocaust Museum) to a portion of Pan Pacific Park adjacent to the Los Angeles Holocaust Monument;

4. Approve, subject to approval of the City Council, the Lease Agreement with the Los Angeles Museum of the Holocaust (Museum), substantially in the form on file in the Board Office, for the use of a portion of Pan Pacific Park for the construction and operation of a Holocaust Museum, subject to the transfer of title to Pan Pacific Park to the City by the State of California;

5. Direct the Board Secretary to forward the Lease Agreement to the Mayor's Office for review pursuant to Executive Directive No. 3, and to the City Attorney's Office for approval as to form; and,

6. Authorize the Board President and Secretary to execute the Lease Agreement upon receipt of the necessary approvals.

SUMMARY:

At the November 17, 2004, Board Meeting, the General Manager, through a memorandum, informed the Board of Recreation and Park Commissioners (Board) of a proposal to relocate the Holocaust Museum to a portion of the Department's Pan Pacific Park adjacent to the Los Angeles Holocaust Monument.

On February 16, 2005, the Board approved (Board Report No. 05-51) the consideration of the proposal to relocate the Holocaust Museum (see Attachment A) and instructed staff to negotiate the terms and conditions for a long-term lease of park property for the proposed Holocaust Museum and to return to the Board for final consideration of the proposed lease upon fulfillment of all CEQA requirements.

After significant discussion and negotiations, Museum and Department staff have come to an agreement on the terms and conditions of the proposed Lease Agreement. Several of the major lease provisions are as follows:

- Effective Date - The Effective Date of the Lease will be the date the City Clerk attests the Lease, or the date which the State of California transfers title to Pan Pacific Park to the City, whichever is later;
- Term - The term shall be for fifty years with early termination for the following reasons: The Museum fails to raise the necessary $6.0 million for the project within one year of the Effective Date of the Lease, the Museum fails to commence construction on the project within thirty six months of the Effective Date of the Lease, the Museum fails to commence Holocaust Museum operations within sixty months of the Effective Date of the Lease;
- Parking - The Museum will provide subterranean parking, per City Code, for its membership, staff, and visitors;

- Sidewalk – The Museum will rehabilitate the existing sidewalk, beginning at the Pan Pacific gear station in the northwest corner, and ending at the designated Federal property line near the fence line at the United States Post Office at the corner of Grove Drive and Beverly Boulevard;
- Bus Drop Off - The Museum will provide a bus drop off on the east side of Grove Drive to ensure the safety of the students and Holocaust Museum visitors that arrive at the Holocaust Museum by bus;
- Restrooms - The Museum shall provide public restroom facilities that will be accessible from the park side;
- Soil Studies - Once construction is underway, the Museum will assume all costs and responsibilities for removing any contaminated soil that may be discovered in the Methane Studies that must be conducted by the Museum on the leased property;
- Landscaping - The Museum will assume the landscaping costs of the museum/lease area;
- Maintenance - The Museum will assume the cost of maintaining the Los Angeles Holocaust Monument, upon the Effective Date of the Lease.

It should be noted that Pan Pacific Park is still owned by the State of California. In 1993, the County of Los Angeles, who had been operating the park since 1978, assigned their operating agreement to the City. In 2000, the City and County entered into a Project Cooperative Agreement that essentially transferred operational responsibility for the park to the City and allowed the Department to design, construct, and operate park facilities on the State-owned park. As Department staff finalized negotiations with the Museum, the City Attorney's Office advised that the City of Los Angeles could not lease the property to the Museum prior to receiving fee title to the property from the State. Department staff is currently working with representatives of the State's General Services Department on this transfer. It is anticipated that the transfer should be complete within approximately two months.

Due to the situation with property ownership, the Lease Agreement is subject to the final transfer of the property to the City of Los Angeles.

At this time, the final design for the Holocaust Museum is not complete. The final design, when completed, will be presented to the Board for final approval prior to any construction taking place at the site.

In accordance with the requirements of the CEQA, a MND was prepared based on an Initial Study, which determined that all potentially significant environmental effects would be mitigated to a level less than significant. The MND was circulated to all interested parties and responsible agencies, and filed with the State clearing house for a thirty-day review and comment period from August 24, 2006 to September 25, 2006. In addition, a Public Hearing was held at the Pan Pacific Recreation Center on September 6, 2006, to receive public comments on the proposed project. In total, seventeen written comment letters were received during the public review period, which included agency

comments from the California Department of Toxic Substance Control and the City of Los Angeles Department of Transportation. Issues raised in the comments included traffic and parking, private use of public parkland, methane gas, and drainage. All comments have been incorporated into the final MND, copies of which have been provided to the Board for its review and consideration. A Mitigation Monitoring and Reporting Program has been prepared that specifies all the mitigation measures identified in the MND, which will either reduce or eliminate the potentially significant environmental impact of the project, in accordance with Section 15097 of the State CEQA Guidelines.

FISCAL IMPACT STATEMENT:

Approval of the relocation of the Holocaust Museum to a portion of Pan Pacific Park and the long-term lease agreement will not have a significant impact on the General Fund. All costs for the design construction, operation, and maintenance of the Holocaust Museum are the responsibility of the Museum. It should be noted that the City has the right to terminate the lease if $6.0 million in funds are not raised within a year of the effective date of the lease, if construction has not commenced within thirty-six months of the effective date of the lease, or the Museum is not operating within sixty months of the effective date of the lease. The Museum may be required to remove or demolish anything built on the property upon termination and restore the premises to its previous condition.

This report prepared by Cid Macaraeg, Sr. Management Analyst II, Real Estate and Asset Management, Planning and Development.

Attachment A

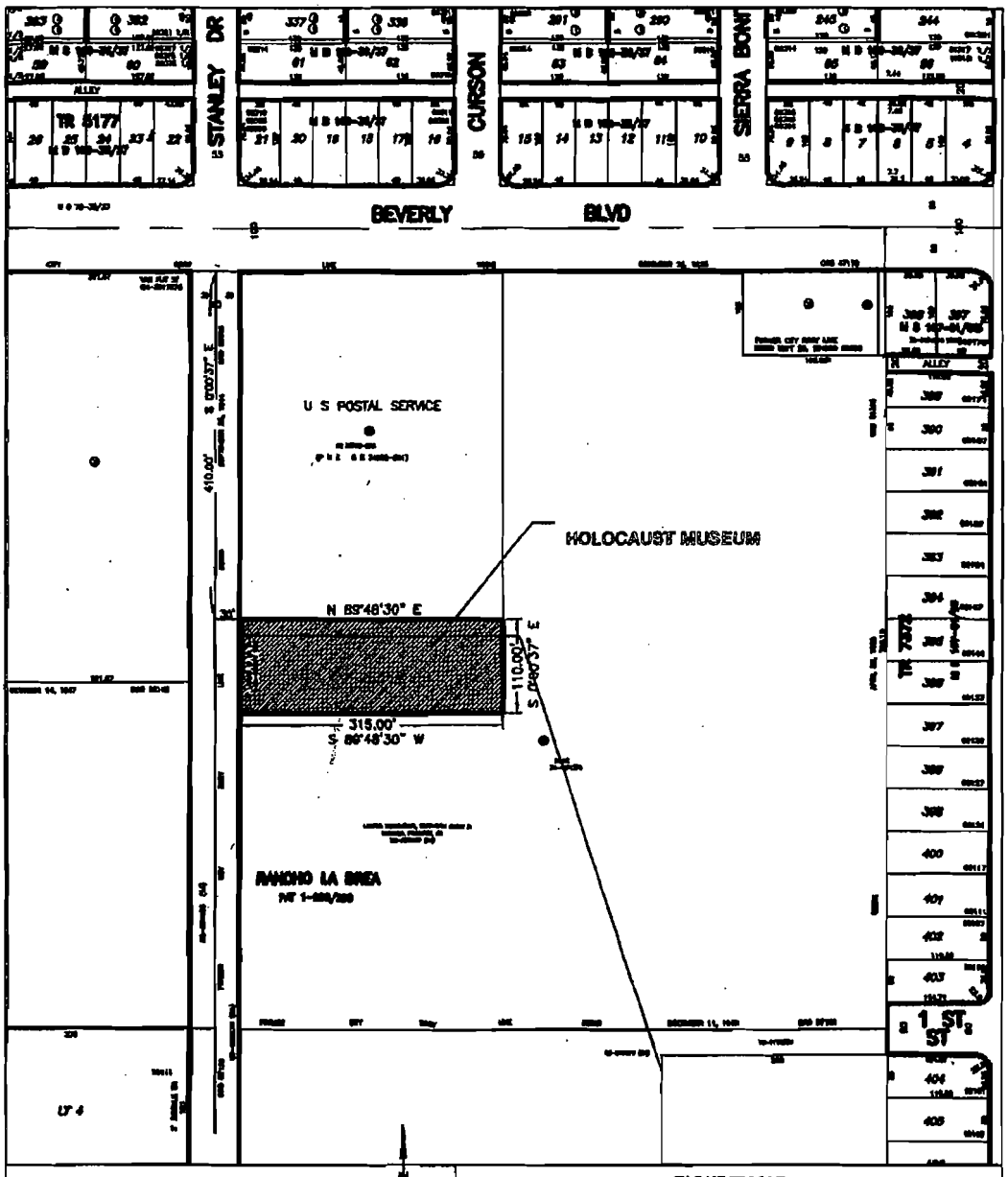

PROJ. Holocaust Museum
R/W
W.O. E1800476
D.M. 138B177

NTS

EXHIBIT MAP

DEPARTMENT OF PUBLIC WORKS
BUREAU OF ENGINEERING
SURVEY DIVISION
Gary Lee Moore, P.E., City Engineer

APPROVED
DEC 18 2019
BOARD OF RECREATION
AND PARK COMMISSIONERS

BOARD REPORT NO. 19-254

DATE December 18, 2019 C.D. 4

BOARD OF RECREATION AND PARK COMMISSIONERS

SUBJECT: PAN PACIFIC PARK – CONCEPTUAL APPROVAL FOR THE EXPANSION OF THE LOS ANGELES MUSEUM OF THE HOLOCAUST

AP Diaz	____	S. Piña-Cortez	____
H. Fujita	____	C. Santo Domingo	DF
V. Israel	____	N. Williams	____

M. Shull
General Manager

Approved X Disapproved ____ Withdrawn ____

RECOMMENDATIONS

1. Grant conceptual approval for the proposed expansion of the Los Angeles Museum of the Holocaust (LAMH) located on a portion of Pan Pacific Park as described in the body of this report and in the exhibits to this Report; and,

2. Authorize the Department of Recreation and Parks' (RAP) General Manager or designee to negotiate and draft an amendment to the lease agreement with LAMH for the use of additional land at Pan Pacific Park for the proposed expansion under terms and conditions indicated in the body of this Report, such amendment to be presented to the Board of Recreation and Park Commissioners (Board) for approval at a future date.

SUMMARY

On May 16, 2007, the Board, through Report No. 07-111, approved the relocation of the LAMH to a portion of Pan Pacific Park (see Exhibit A). This approval also included a 50-year Lease Agreement for the use of a portion of Pan Pacific Park for the construction, operation and maintenance of the museum building at LAMH's sole cost. Construction was completed in October 2010.

LAMH, which was founded in 1961, is the oldest survivor founded Holocaust Museum in the nation. Its mission is to commemorate those who perished in the Holocaust, honor those who survived, and house precious artifacts that weathered the Holocaust. It provides free education to students and visitors about the Holocaust.

The museum building, when opened in 2010, was designed to accommodate 15,000 visitors annually. In 2018, the museum welcomed over 63,000 visitors and is expected to exceed this number in 2019. In order to accommodate the increasing number of visitors, LAMH is proposing to construct an additional structure and modify its existing structure (see Exhibit B1-B3).

The additional structure will house a new pavilion adjacent to the existing museum building. It will accommodate more visitors, temporary exhibits, and special events. The showcase of the proposed expansion will be a permanent installation of the University of Southern California's (USC) Shoah Foundation's "Dimensions in Testimony" project, which captures survivor testimony and uses Artificial Intelligence (AI) and Virtual Reality (VR) to allow visitors to engage in real-time dialogue with those who witnessed the genocide firsthand. The new pavilion will measure approximately 14,750 square feet and consist of a 200-seat lecture hall with a state of the art A/V system for visiting lecturers, survivors, movies, etc.; a 24-seat witness testimony full immersion experience (in association with the Shoah Foundation); 3 classrooms for a children's learning center; a temporary exhibit hall for travelling exhibits; a small grab-and-go for beverages and snacks; administration offices and dedicated bathrooms.

The modification to the existing museum structure will measure approximately 9,900 square feet. It will be used to house a rare and authentic, full-scale German transport box-car and alleviate visitor entry lines and provide highly needed secured queuing and improved circulation to both buildings.

LAMH estimates that the design and construction of the proposed expansion will cost approximately $20,000,000. LAMH proposed to raise another $10,000,000 to $15,000,000 for an endowment to operate the building in perpetuity. At this time, LAMH has already raised $7,000,000 which includes a $6,000,000 line item in the 2019/2020 California State budget and another approximately $1,000,0000 in additional private commitments to date.

On October 23, 2019, this proposed expansion was presented to RAP's Facility Repair and Maintenance Commission Task Force (Task Force). The Task Force recommended that this proposal be forwarded to the full Board for consideration.

LAMH has recently presented the proposed expansion to the Mid-City West Neighborhood Council and the Pan Pacific Park Advisory Board. Both organizations indicated their support for the project. The Mid-City West Community Council (MCWCC) has provided a letter of support for the project (see Exhibit C).

ENVIRONMENTAL IMPACT

All requirements under the California Environmental Quality Act will be considered when the amendment to the lease agreement and the proposed project plans will be brought back to the Board for approval.

FISCAL IMPACT

Conceptual approval of the proposed expansion will have no impact to RAP's General Fund. All costs associated with the proposed expansion is the responsibility of LAMH.

STRATEGIC PLAN INITIATIVES AND GOALS

Not applicable at this time

This Report was prepared by Cid Macaraeg, Sr. Management Analyst II, Planning, Maintenance and Construction Branch.

LIST OF ATTACHMENTS/EXHIBITS

1) LAMH Premise Area
2) LAMH Proposed Expansion
3) MCWCC Letter of Support

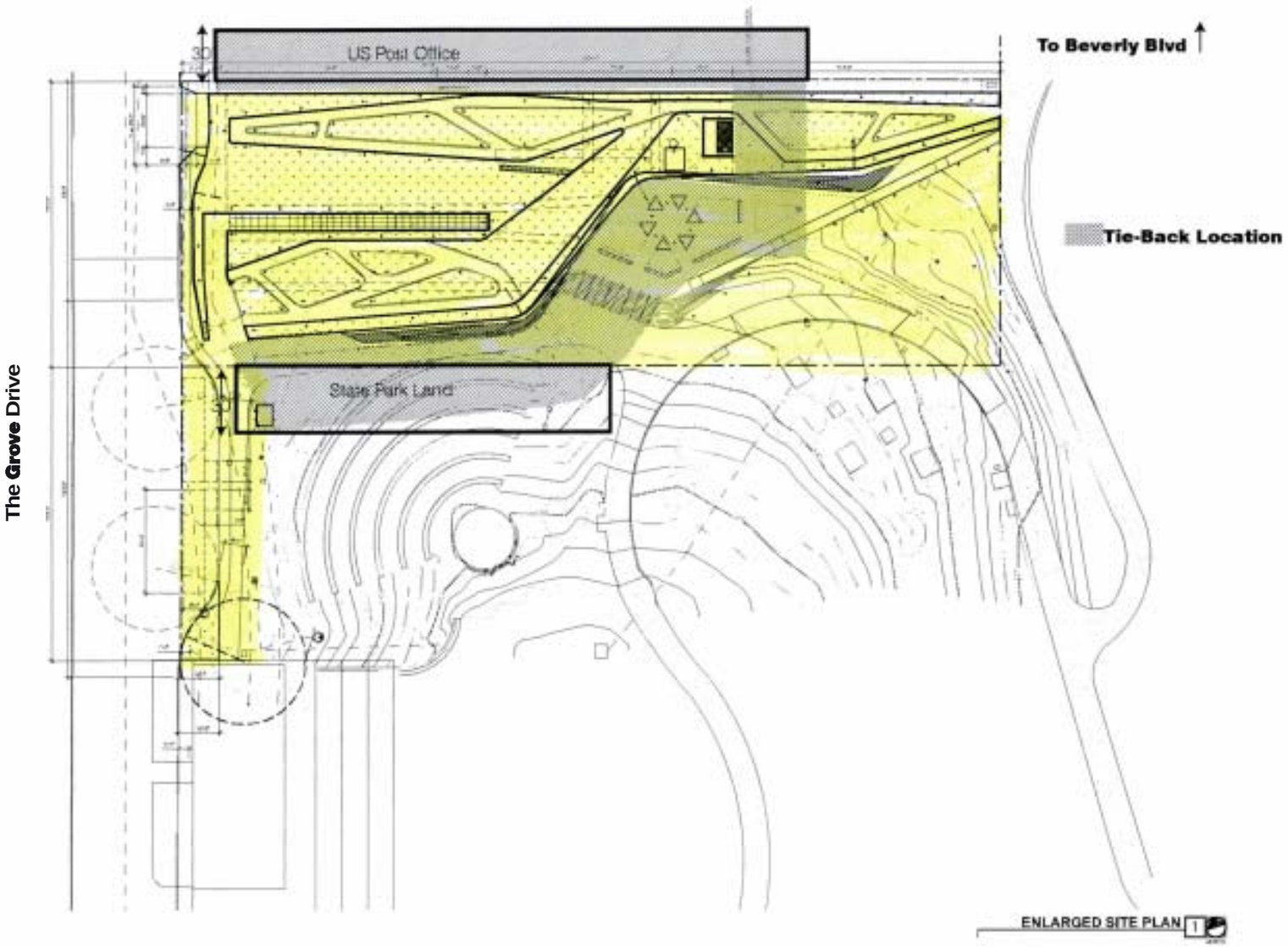
US Post Office
State Park Land
To Beverly Blvd
Tie-Back Location
The Grove Drive
ENLARGED SITE PLAN 1

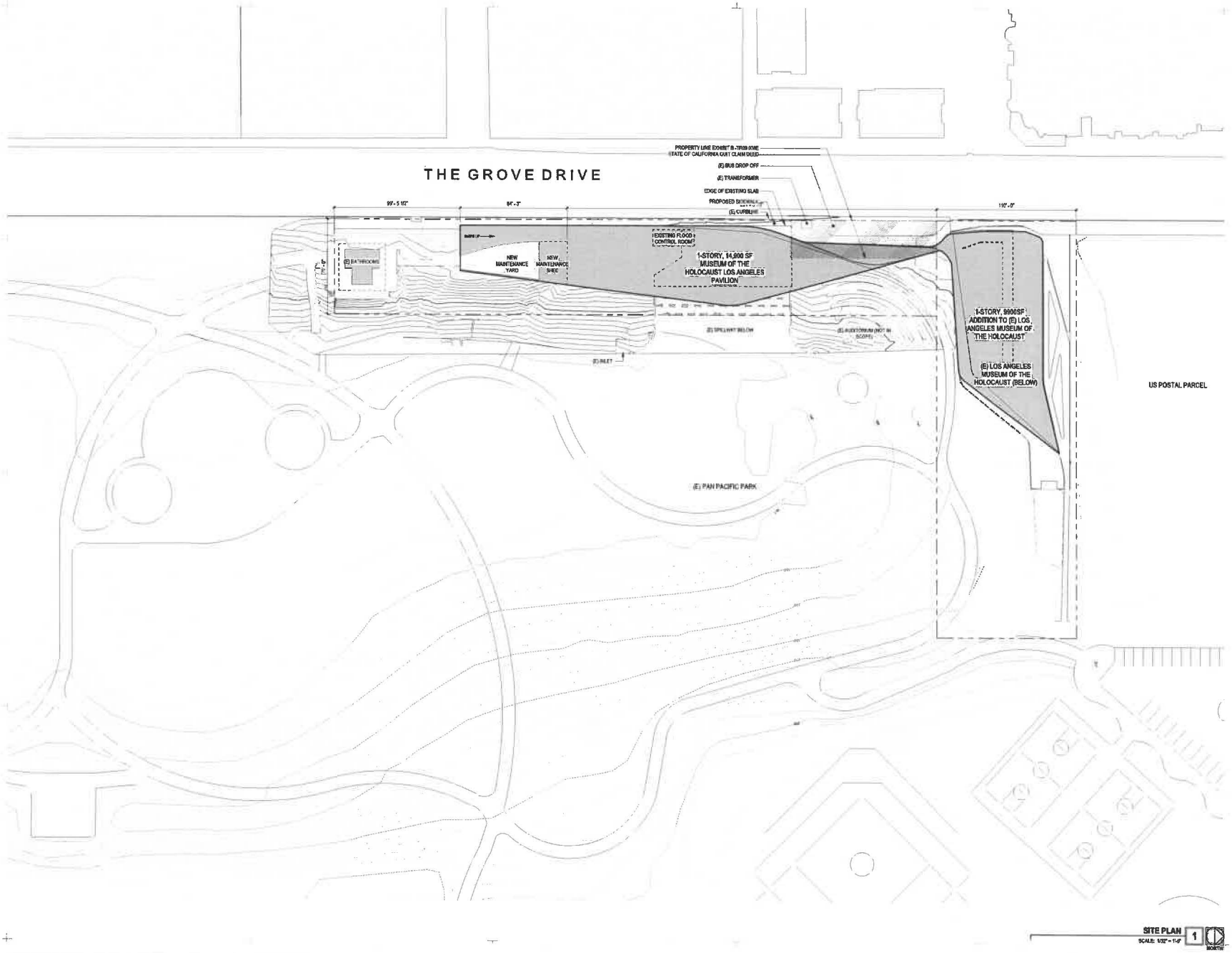

NOT FOR CONSTRUCTION

02.OCT.2019

ba
belzberg architects
2321 MAIN STREET
SANTA MONICA, CA 90405
310.453.9611
www.belzbergarchitects.com

#	DESCRIPTION	DATE

LAMH PAVILION

100 THE GROVE DRIVE
LOS ANGELES, CA 90036

SITE PLAN

PROJECT NUMBER: 17009

A110

10/2/2019 4:39:37 PM

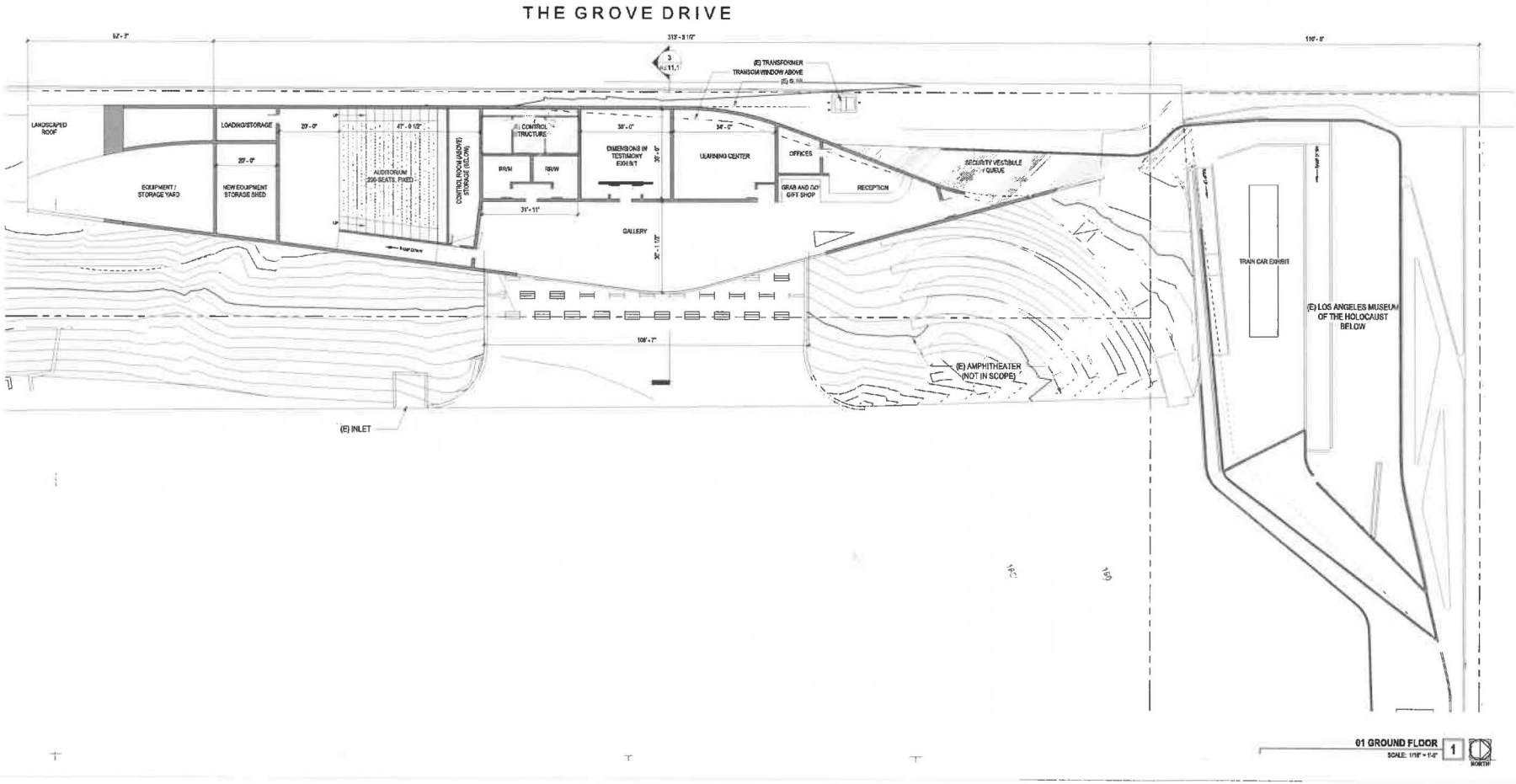

NOT FOR CONSTRUCTION

02.OCT.2019

ba
belzberg architects
2321 MAIN STREET
SANTA MONICA, CA 90405
310.453.9511
www.belzbergarchitects.com

#	DESCRIPTION	DATE

LAMH PAVILION

100 THE GROVE DRIVE
LOS ANGELES, CA 90036

GROUND FLOOR PLAN

PROJECT NUMBER: 17009

A211

10/2/2019 4:29:39 PM

VIEW FROM EAST PARK 2
SCALE: 12" = 1'-0"

VIEW FROM LOWER BASIN 1
SCALE: 12" = 1'-0"

NOT FOR CONSTRUCTION

02.OCT.2019

ba
belzberg architects
2321 MAIN STREET
SANTA MONICA, CA 90405
310.453.9511
www.belzbergarchitects.com

#	DESCRIPTION	DATE

LAMH PAVILION

100 THE GROVE DRIVE
LOS ANGELES, CA 90036

PROJECT PROGRESS RENDERINGS

PROJECT NUMBER: 17009

A900

10/2/2019 1:29:39 PM

MID CITY WEST
COMMUNITY COUNCIL

543 N. Fairfax Avenue, Suite 106
Los Angeles, California 90036
Telephone (323) 651-3512
www.midcitywest.org

Board of Directors
2019-2021

Scott Epstein
Chair

Andrew Jhun
First Vice Chair

Henry Van Moyland
Second Vice Chair

Marisa Glucoft
Secretary

Ivan Salas-Orono
Treasurer

Thomas Bailey
Judith Benezra
Mehmet Berker
Cindy Bitterman
Shem Bitterman
Lauren Borchard
Montrese Chandler
Lindsey Chase
Isack Fadlon
Joshua Fogelson
Barbara Gallen
Amy Goldenberg
Will Hackner
Taylor Holland
Vilma Hurtado
Tyler Lambert-Perkins
Charles Lindenblatt
David Mann
Elicica Morris
Dee Murthy
Terence Mylonas
Lauren Nichols
Taylor Nichols
Arnali Ray
Michael Schneider
David Sobel
Thao Tran
Don Whitehead
Roque Wicker

October 18, 2019

Department of Recreation and Parks
Board of Recreation and Park Commissioners;
Facility Repair and Maintenance Commission Task Force
Lynn Alvarez, Chair

Re: Letter of Support for Los Angeles Museum of the Holocaust Renovation Plans
Meeting Date: October 23, 2019
Agenda Item: 2A

To whom it may concern:

Greetings from Mid City West Community Council, a certified neighborhood council of the City of Los Angeles.

The Los Angeles Museum of the Holocaust's ("LAMOTH") is located at 100 The Grove Drive, which is situated in Pan Pacific Park since 2010 providing educational and other various programming to the general public and students to commemorate those who perished in the Holocaust and honor those who survived. The oldest Survivor-founded Holocaust museum in the United States, the museum is planning an expansion and addition to its current museum space to include additional museum space, amenities and restrooms.

Representatives of LAMOTH attended our duly noticed regular board meeting on October 10, 2019 and presented plans for the museum's proposed renovations and expansion. Our board discussed and considered LAMOTH's proposal.

I certify that at our duly noticed regular board meeting on October 10, 2019, a quorum of Mid City West Community Council **unanimously voted in support** of LAMOTH's plans to remodel and expand the current museum space located at Pan Pacific Park by a vote of 20 yeas, zero nays, and zero abstentions.

Please kindly ensure that this letter is reflected in your minutes and/or file on the matter. Thank you for the opportunity to provide our neighborhood council's position on the matter.

Sincerely,

Andrew C. Jhun
First Vice Chair
Mid City West Community Council
Email: ajhun@midcitywest.org

Cc:
Pan Pacific Park Advisory Board
Eric Calhoun

NEIGHBOR (STORAGE)

NEIGHBOR (TELEVISION CITY)

NEIGHBOR (TELEVISION CITY)

THE GROVE DRIVE

(E) LOADING AREA

(E) LADWP TRANSFORMER (TO BE REMOVED)

EDGE OF EXISTING SLAB

PROPOSED SECURITY FENCE

(E) CROSSWALK

68' - 11"
SY SETBACK

(E) CURB CUT

292' - 11"

PROPOSED SIDEWALK

(E) CURBLINE

(E) BATHROOM

MECHANICAL YARD

COURTYARD

LEARNING CENTER AT HOLOCAUST MUSEUM LA

(E) PULL SECTION

(E) MANHOLE

(E) INLET

(E) SPILLWAY

AMPHITHEATER (NOT IN SCOPE)

PROPOSED SECURITY FENCE

(E) PAN PACIFIC PARK

PROPOSED TEMPORARY SERVICE DISCONNECT

PROPOSED NEW PULL SECTION

(E) MUSEUM BELOW GREEN ROOF

BOXCAR EXHIBIT ADDITION TO (E) HOLOCAUST MUSEUM LA

NEW ROOF CANOPY ABOVE

(E) ENTRY FOR MUSEUM @ BOTTOM OF RAMP

NEIGHBOR (US POSTAL PARCEL)

(E) EXIT FOR MUSEUM (BELOW GREEN ROOF)

(E) MARTYR'S MEMORIAL

(E) MSB W/ UTILITY METER AT EXISTING AHU ROOM

(E) EXTERIOR CHILDREN'S MEMORIAL

PROPOSED OWNER TX LOCATION

PROPOSED LADWP 'MSB' W/ UTILITY METER LOCATION

PROPOSED LADWP TX LOCATION

PROPOSED LADWP SWITCH LOCATION

APPROXIMATE LOCATION OF (E) GAS SERVICE AND PIPING

PROPOSED LADWP STAGING AREA CLEARANCE

18' - 0"

30' - 0"

APPROX CL OF (E) UTILITY EASEMENT

15' - 0"

PROPOSED LADWP SERVICE ACCESS PATH

12' - 0"

BEVERLY DRIVE

SITE PLAN (LADWP)
SCALE: 1/32" = 1'-0"

NORTH

NOT FOR CONSTRUCTION

28.DEC.2021
PERMIT REVIEW SET

belzberg architects
2740 MAIN STREET
SANTA MONICA, CA 90405
310.453.9611
www.belzbergarchitects.com

#	DESCRIPTION	DATE

HOLOCAUST MUSEUM LA EXPANSION

100 THE GROVE DRIVE
LOS ANGELES, CA 90036

SITE PLAN (LADWP)

PROJECT NUMBER: 17009

E000

12/28/2021 7:25:15 PM

THIRD AMENDMENT TO LEASE AGREEMENT BETWEEN CITY OF LOS ANGELES AND HOLOCAUST MUSEUM LA FOR THE CONSTRUCTION AND OPERATION OF HOLOCAUST MUSEUM LA

This Third Amendment to Lease Agreement ("Amendment") is entered into this __ day of _____ 20__, by and between the CITY OF LOS ANGELES ("CITY"), a municipal corporation, acting by and through its Board of Recreation and Park Commissioners, as Landlord ("CITY"), and HOLOCAUST MUSEUM LA (previously named The Los Angeles Museum of the Holocaust), a California public benefit 501(c)(3) non-profit corporation ("MUSEUM"), with a principal mailing address of 100 South The Grove Drive, Los Angeles, California 90036, at Tenant, and amends that certain Lease Agreement, as previously amended, by and between CITY and MUSEUM entered into October 31, 2007 ("Agreement") as described below. Capitalized terms not defined herein shall have the meaning set forth for those terms in the Agreement, as amended.

1. **Paragraph 1.1.** Paragraph 1.1 of the Agreement is hereby amended and restated with the following, which adds the updated name and address of MUSEUM:

1.1. Parties. This Lease Agreement ("Lease") is entered into this ____ day of 20___, by and between the CITY OF LOS ANGELES, a municipal corporation, acting by and through its Board of Recreation and Parks Commissioners, as Landlord ("CITY"), and HOLOCAUST MUSEUM LA, a California public benefit 501(c)(3) non-profit corporation ("MUSEUM"), with a principal mailing address at 100 The Grove Dr. Los Angeles, CA 90036

2, **Paragraph 4.1.1.** Paragraph 4.1.1. is hereby added to the Agreement as follows:

4.1.1. The "Premises" shall also include the land further described in Exhibit A of that certain Third Amendment to this Lease, which has been added to the Premises leased to MUSEUM under such Third Amendment in contemplation of the MUSEUM's expansion project as approved by the Board on _____ (Board Report # _____) and as depicted in Exhibit B of such Third Amendment ("Expansion Project"). The provisions of Article 13 of this Lease, and the obligations of the MUSEUM thereto, shall apply to the design and construction of the Expansion Project, and the term Holocaust Museum as used in this Lease shall mean the Holocaust Museum which includes the facilities added in connection with the Expansion Project.

4. **Paragraph 5.1.2.** Paragraph 5.1.2 of the Agreement is hereby amended and restated with the following, which removes language regarding direct access to the meeting hall from the outside of the Premises:

5.1.2. Meeting Hall. The meeting hall which shall be constructed on the Premises as set forth in the Expansion Project (Exhibit B) will be available for use by CITY during non-peak hours for such activities as, but not limited to, a gathering place for group lectures and seminars and for use as a community meeting room. Hours of use (which shall include use after operating hours of the Holocaust Museum) and access to such facilities shall be coordinated with MUSEUM in advance. CITY shall have the right to use the meeting hall for CITY events at least twelve (12) times per year. There shall be no cost to CITY for the use of the meeting hall.

5. **Paragraph 5.1.4**. Paragraph 5.1.4 of the Agreement is hereby amended and restated with the following, which removes language regarding direct access to the entry/foyer from the outside of the Premises:

5.1.4. Entry/Foyer. The entry/foyer area which shall be constructed on the Premises as set forth in the Expansion Project (Exhibit B) will be available for use by CITY after normal hours of operation for such activities as, but not limited to, a gathering place for group meetings, lectures and seminars and for use as a community meeting area. Hours of use and access to such facilities (which shall include use after operating hours of the Holocaust Museum) shall be coordinated with MUSEUM in advance. CITY shall have the right to use the entry/foyer for CITY events at least twelve (12) times per year. There shall be no cost to CITY for the use of the entry/foyer.

6. **Paragraph 5.1.9** Paragraph 5.1.9 is hereby added to the Agreement in order to provide language for the addition of a Gift Shop on the Premises.

5.1.9. Gift Shop. MUSEUM may include a gift shop within the facility subject to the prior approval of the General Manager. The operation of any such approved gift shop shall be in compliance with all applicable laws and shall conform to all policies and regulations of the DEPARTMENT for the sale of goods and merchandise on DEPARTMENT property.

7. **Paragraph 5.1.10** Paragraph 5.1.10 is hereby added to the Agreement in order to provide language for the addition of a Grab and Go/Marketplace on the premises.

5.1.10 Grab and Go/Marketplace. Subject to the prior approval of the General Manager, MUSEUM may include a grab and go/marketplace for the purpose of selling food and beverages including but not limited to prepared foods, prepackaged foods, snacks, and beverages as well as allow for preparation and staging for catering for special events. The Grab and Go shall not consist of a fully functioning kitchen. The operation of any such approved gift grab and go/marketplace shall be in compliance with all applicable laws and shall conform to all policies, standards and regulations of the DEPARTMENT for the sale of food and beverages on DEPARTMENT property.

8. **Paragraph 5.5** Paragraph 5.5 is hereby amended and restated with the following which provides language for an updated fee schedule:

5.5. Admission Fees. MUSEUM is open to the public and free to all residents of California with valid ID, all students showing student ID or participating in school visits. All other adults will be subject to a $15.00 admission fee and all other seniors 65 or older shall be subject to a $10.00 admission fee. MUSEUM reserves the right to charge a small admission fee and reasonably adjust the stated fees in this section at any time in the future, should it be deemed necessary by the Board of Trustees of Holocaust Museum LA, subject to the written approval of the General Manager. MUSEUM shall submit to the General Manager any proposed changes in admission fees. MUSUEM will be notified in writing within thirty (30) days of the General Manager's approval or disapproval of any or all of the proposed changes in admission fees. In the event of disapproval of any changes in admission fees, the General Manager shall specify the reasons therefore, along with the amount or range of admission fees which would be approved.

9. **Paragraph 13.2.1.** Paragraph 13.2.1 of the Agreement is hereby amended and restated with the following, which removes language regarding direct access to the meeting hall from the outside of the Premises:

13.2.1. Meeting Hall. The meeting hall which shall be constructed on the Premises as

set forth in the Expansion Project (Exhibit B) will be available for use by CITY during non-peak hours for such activities as, but not limited to, a gathering place for group lectures and seminars and for use as a community meeting room. Hours of use (which shall include use after operating hours of the Holocaust Museum) and access to such facilities shall be coordinated with MUSEUM in advance. CITY shall have the right to use the meeting hall for CITY events at least twelve (12) times per year. There shall be no cost to CITY for the use of the meeting hall.

10. **Paragraph 13.2.2** Paragraph 13.2.2 of the Agreement is hereby amended and restated with the following, which removes language regarding direct access to the entry/foyer from the outside of the Premises:

13.2.2. Entry/Foyer. The entry/foyer area which shall be constructed on the Premises as set forth in the Expansion Project (Exhibit B) will be available for use by CITY after normal hours of operation for such activities as, but not limited to, a gathering place for group meetings, lectures and seminars and for use as a community meeting area. Hours of use and access to such facilities (which shall include use after operating hours of the Holocaust Museum) shall be coordinated with MUSEUM in advance. CITY shall have the right to use the entry/foyer for CITY events at least twelve (12) times per year. There shall be no cost to CITY for the use of the entry/foyer.

11. **Paragraph 13.2.6** Paragraph 13.2.6 is hereby added to the Agreement in order to provide language for the relocation of the existing DEPARTMENT Maintenance Yard.

13.2.6 Maintenance Yard. MUSEUM shall relocate the existing DEPARTMENT Maintenance Yard located on Grove Drive (“New Maintenance Yard”). MUSEUM will fund, design, and construct the New Maintenance Yard to DEPARTMENT standards. New Maintenance Yard will be located within Pan Pacific Park, not on the Premises, and its location and design shall be approved by DEPARTMENT prior to its construction. New Maintenance Yard shall be equal or greater in size and configuration to the existing maintenance yard. New Maintenance Yard shall be completed within one year of the execution of the Third Amendment to Lease Agreement, unless otherwise agreed to in writing by DEPARTMENT.

If existing DEPARTMENT Maintenance Yard is proposed to be demolished prior to completion of New Maintenance Yard, then MUSEUM shall provide the DEPARTMENT with a temporary maintenance yard ("Temporary Maintenance Yard") on the Premises until such time that a New Maintenance Yard is provided by MUSEUM. MUSEUM will fund, design, and construct the Temporary Maintenance Yard to DEPARTMENT standards. The size, configuration, and location of the Temporary Maintenance Yard shall be approved by DEPARTMENT prior to its construction.

12. **Paragraph 13.2.7** Paragraph 13.2.7 is hereby added to the Agreement in order to provide language for the rehabilitation of the existing Restroom Building along Grove Drive.

13.2.7 Grove Drive Restroom Building. MUSEUM shall, at its sole cost and expense, perform a one time rehabilitation to the existing Restroom Building located within Pan Pacific Park, along Grove Drive, not on the Premises, to DEPARTMENT standards. Such rehabilitation shall include, interior and exterior improvements including, American with Disabilities Act compliant upgrades if required by applicable building code, fixture replacement, lighting improvements, plumbing improvements, and improvements to existing storage/office space. The rehabilitation scope work is detailed in Exhibit C of that certain Third Amendment to this Lease.

13. **Paragraph 21.17** Paragraph 21.17 is hereby added to the Agreement as follows:

21.17 COVID-19. Employees of MUSEUM and/or persons working on its behalf, including, but not limited to, subcontractors (collectively, "Contractor Personnel"), while performing services under this Lease and prior to interacting in person with City employees, contractors, volunteers, or members of the public (collectively, "In-Person Services") must be fully vaccinated against the novel coronavirus 2019 ("COVID-19"). "Fully vaccinated" means that 14 or more days have passed since Contractor Personnel have received the final dose of a two-dose COVID-19 vaccine series (Moderna or Pfizer-BioNTech) or a single dose of a one-dose COVID-19 vaccine (Johnson & Johnson/Janssen) and all booster doses recommended by the Centers for Disease Control and Prevention. Prior to assigning Contractor Personnel to perform In-Person Services, Museum shall obtain proof that such Contractor Personnel have been fully vaccinated. Museum shall retain such proof for the document retention period set forth in this Lease in Article 8. Museum shall grant medical or religious exemptions ("Exemptions") to Contractor Personnel as required by law. If Museum wishes to assign Contractor Personnel with Exemptions to perform In-Person Services, Museum shall require such Contractor Personnel to undergo weekly COVID-19 testing, with the full cost of testing to be borne by Museum. If Contractor Personnel test positive, they shall not be assigned to perform In-Person Services or, to the extent they have already been performing In-Person Services, shall be immediately removed from those assignments. Furthermore, Museum shall immediately notify City if Contractor Personnel performing In-Person Services (1) have tested positive for or have been diagnosed with COVID-19, (2) have been informed by a medical professional that they are likely to have COVID-19, or (3) meet the criteria for isolation under applicable government orders.

IN WITNESS WHEREOF, the CITY OF LOS ANGELES, a municipal corporation, acting by and through its Board of Recreation and Park Commissioners, Landlord herein, and HOLOCAUST MUSEUM LA, a California nonprofit public benefit corporation, Tenant herein, have caused this Amendment to be executed as of the date first set forth above.

Executed this _____ day
of _____, 2014

CITY:
CITY OF LOS ANGELES, a municipal corporation, acting by and through its BOARD OF RECREATION AND PARK COMMISSIONERS:

By _____
President

By _____
Secretary

Executed this _____ day
of _____, 2014

TENANT:
HOLOCAUST MUSEUM LA, a California nonprofit public benefit corporation

By _____
Guy Lipa, Chairman of the Board

Approved as to Form:
DATE: _____

MICHAEL N. FEUER
City Attorney

By _____
Deputy City Attorney

EXHIBITS

Exhibit A – Additional Real Property Description
Exhibit B – Expansion Project
Exhibit C - Grove Drive Restroom Building

EXHIBIT A

LEGAL DESCRIPTION

Being a portion of the Rancho La Brea, in the City of Los Angeles, County of Los Angeles, State of California, as shown on map recorded in Book 1, pages 289 and 290, of Patents in the office of the County Recorder of said County, the horizontal limits being described as follows.

Commencing at the intersection of the southerly line of Beverly Boulevard, 100 feet wide, as shown on Tract No. 45628, in said City, as per map filed in Book 1265, pages 33 through 39, inclusive, of Maps with the easterly line of The Grove Drive, 60 feet wide; thence southerly along said easterly line, South 00º00'37" East, 520.00 feet to the southerly line of the land described in Quitclaim Deed recorded January 2, 2008 as Instrument No. 20080000476 of Official Record of said County and the Point of Beginning; thence continuing along said easterly line, South 00º00'37" East 426.75 feet; thence leaving said easterly line, North 89º59'23" East 75.00 feet to a line parallel with and lying 75.00 feet easterly of the easterly line of said The Grove Drive; thence northerly along said parallel line; North 00º00'37" West 418.98 feet to the beginning of a non-tangent curve, concave southeasterly, having a radius of 71.67 feet and to which beginning a radial line bears North 35º33'48" West; thence northeasterly along said curve, through a central angle of 13º20'30", an arc distance of 16.69 feet to the southerly line of the land per said Quitclaim Deed; thence westerly along said southerly line, South 89º48'30" West 89.58 feet to the Point of Beginning.

Except therefrom that portion lying within the land described in Quitclaim Deed recorded October 21, 2011 as Instrument No. 20111431667 of Official Records of said County.

This legal description is delineated on the accompanying "Exhibit B" and is made a part hereof for reference purposes and is not to be used in conveyance of land in violation of the Subdivision Map Act of the State of California.

Prepared under the direction of

10/21/2021

Douglas R. Howard, PLS 6169 Date

PSOMAS

PROFESSIONAL LAND SURVEYOR
DOUGLAS R. HOWARD
No. 6169
STATE OF CALIFORNIA

W:\1HOL010100\SURVEY\LEGALS\LEGAL_MUSEUM_2021-1021.doc
10/21/2021
DRH;tmcd

EXHIBIT B

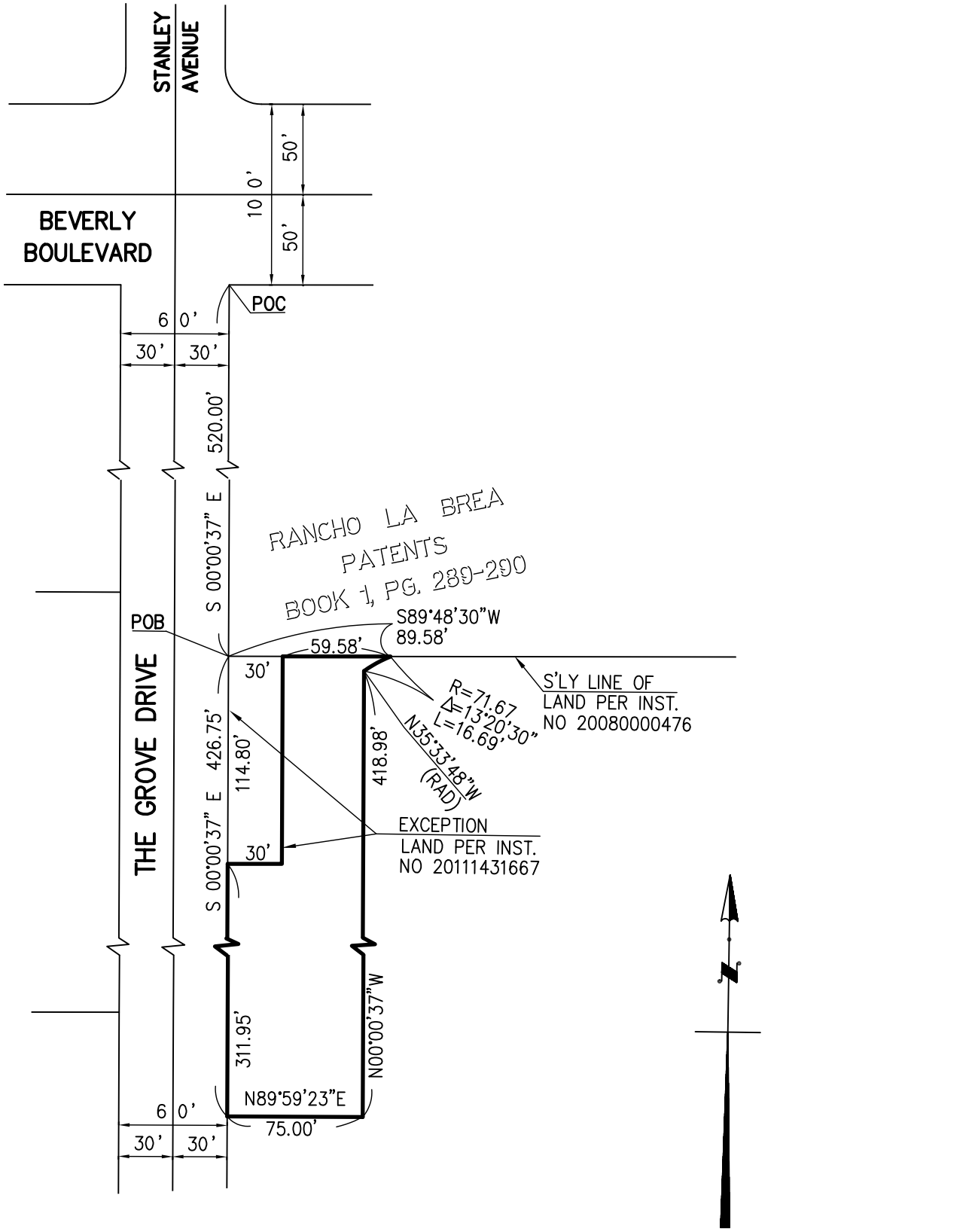

PSOMAS
555 South Flower Street, Suite 4300
Los Angeles, CA 90071
(213) 223-1400 (213) 223-1444 (FAX)
www.psomas.com

1HOL010100 10/21/2021

Oct. 21, 2021 - 09:47:04 DWG Name: W:\1HOL010100\SURVEY\LEGALS\PL\PL-EXHIBIT_ESMT_2021-0726.dwg Updated By: dhoward

HOLOCAUST MUSEUM LA EXPANSION

100 THE GROVE DRIVE
LOS ANGELES, CA 90036

BELZBERG ARCHITECTS LLP

100% DESIGN SUBMITTAL

17.NOV.2021

ABBREVIATIONS

ACT	ACOUSTICAL CEILING TILE
AFF	ABOVE FINISH FLOOR
ALQ	ACCESSORY LIVING QUARTERS
ALT	ALTERNATE
AD	AREA DRAIN
BLDG	BUILDING
BOT	BOTTOM
CIP	CAST IN PLACE
CL	CENTER LINE
CLG	CEILING
CLR	CLEAR
COL	COLUMN
CONC	CONCRETE
CONT	CONTINUOUS
CPT	CARPET
CT	CERAMIC TILE
CMU	CONCRETE MASONRY UNIT
DIA	DIAMETER
DIM	DIMENSION
DN	DOWN
DS	DOWN SPOUT
DTL	DETAIL
DWG	DRAWING
E	EAST
(E)	EXISTING
EA	EACH
EL	ELEVATION
ELEC	ELECTRIC(AL)
ELEV	ELEVATOR
EQ	EQUAL
EXP	EXPOSED
FD	FLOOR DRAIN
FG	FINISH GRADE
FL	FLOOR
FOF	FACE OF FINISH
FT	FOOT
GA	GAUGE
GLZ	GLAZING
GWB	GYPSUM WALL BOARD
HB	HOSE BIBB
HC	HOLLOW CORE
HDWR	HARDWARE
HM	HOLLOW METAL
HOR	HORIZONTAL
HR	HOUR
HT	HEIGHT
HVAC	HEATING, VENTILATION AND AIR CONDITIONING
ID	INSIDE DIAMETER
INS	INSULATION
MAT	MATERIAL
MAX	MAXIMUM
MFR	MANUFACTURER
MIN	MINIMUM
MISC	MISCELLANEOUS
MTL	METAL
(N)	NEW
N	NORTH
NIC	NOT IN CONTRACT
No	NUMBER
NTS	NOT TO SCALE
OC	ON CENTER
OD	OUTSIDE DIAMETER
R	RADIUS/RISER
REF	REFERENCE
REQ	REQUIRED
REV	REVISION
ROW	RIGHT OF WAY
S	SOUTH
SC	SOLID CORE
SIM	SIMILAR
SFD	SINGLE FAMILY DWELLING
SPEC	SPECIFICATIONS
STD	SLOPE TO DRAIN
STRUCT	STRUCTURAL
SF	SQUARE FEET
ST	STONE TILE
STC	STUCCO
STL	STEEL
STN	STONE
T	TREAD
TOB	TOP OF BEAM
TOC	TOP OF CONCRETE
TOF	TOP OF FLOOR
TOS	TOP OF SLAB
TOW	TOP OF WALL
TRZ	TERAZZO
TYP	TYPICAL
UNO	UNLESS NOTED OTHERWISE
VERT	VERTICAL
W	WEST
WD	WOOD
WP	WATERPROOF(ING)

SYMBOL LEGEND

NORTH ARROW

FINISH TAG

ROOM TAG — ROOM NAME, ROOM NUMBER, SQUARE FOOTAGE

INTERIOR ELEVATION KEY — ELEVATION DRAWN, DRAWING NUMBER, SHEET REFERENCE

BUILDING SECTION — DIRECTION OF VIEW, DRAWING NUMBER, SHEET REFERENCE

EXTERIOR ELEVATION KEY — DRAWING NUMBER, SHEET REFERENCE

REVISION TAG

ENLARGED PLAN / DETAIL — DRAWING NUMBER, SHEET REFERENCE

DETAIL KEY — DRAWING NUMBER, SHEET REFERENCE

DETAIL KEY — LEVEL NAME, HEIGHT

GRID BUBBLE

WINDOW TAG

DOOR TAG

DIMENSIONS

VIEW NAME — SCALE, DRAWING NUMBER

VICINITY MAP

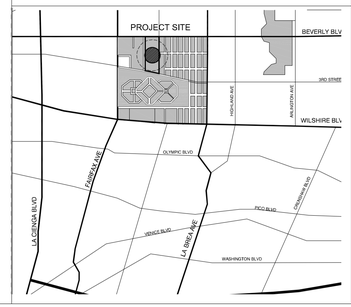

PROJECT DIRECTORY

OWNER: **HOLOCAUST MUSEUM LOS ANGELES**
100 S. THE GROVE DRIVE
LOS ANGELES, CA 90046
CONTACT: BETH KEAN, LISA BARNET
T: 310.453.9611 F:310.453.9166

ARCHITECT: **BELZBERG ARCHITECTS, LLP**
1729 21ST STREET
SANTA MONICA, CA 90404
CONTACT: HAGY BELZBERG
T: 310.453.9611 F:310.453.9166

SMEP ENGINEER: **ARUP**
900 WILSHIRE BLVD, 19TH FLOOR
LOS ANGELES, CA 90017
CONTACT: BRUCE MCKINLEY
T: 310.578.4402

CIVIL ENGINEER: **PSOMAS**
555 FLOWER STREET #4300
LOS ANGELES, CA 90071
CONTACT: DAVID CURTIS
T: 213.223.1524

LANDSCAPE ARCHITECT: **STUDIO-MLA**
251 SOUTH MISSION ROAD
LOS ANGELES, CA 90033
CONTACT: MIA LEHRER
T: 310.828.6373

GEOTECHINCAL ENGINEER: **GROUP DELTA**
370 AMAPOLA AVENUE #212
TORRANCE, CA 90501
CONTACT: MICHAEL READER
T: 310.320.5100

GENERAL CONTRACTOR: **MATT CONSTRUCTION**
261 SOUTH FIGUEROA STREET SUITE 120
LOS ANGELES, CA 90012
CONTACT: SAM RAGSDALE
T: 562.236.2550

APPLICABLE CODES

2020 CITY OF LOS ANGELES BUILDING CODE
-INCL. ALL APPLICABLE AMENDMENTS
2019 CITY OF LOS ANGELES ELECTRICAL CODE
-INCL. ALL APPLICABLE AMENDMENTS
2019 CITY OF LOS ANGELES MECHANICAL CODE
-INCL. ALL APPLICABLE AMENDMENTS
2019 CITY OF LOS ANGELES PLUMBING CODE
-INCL. ALL APPLICABLE AMENDMENTS
2019 CITY OF LOS ANGELES FIRE CODE
-INCL. ALL APPLICABLE AMENDMENTS
2020 CITY OF LOS ANGELES GREEN BUILDING CODE
-INCL. ALL APPLICABLE AMENDMENTS
2019 CALIFORNIA ELECTRICAL CODE
-INCL. ALL APPLICABLE AMENDMENTS
2019 CALIFORNIA MECHANICAL CODE
-INCL. ALL APPLICABLE AMENDMENTS
2019 CALIFORNIA PLUMBING CODE
-INCL. ALL APPLICABLE AMENDMENTS
2019 CALIFORNIA ENERGY CODE
-INCL. ALL APPLICABLE AMENDMENTS
2019 CALIFORNIA GREEN BUILDING STANDARDS CODE
-INCL. ALL APPLICABLE AMENDMENTS
2018 INTERNATIONAL FIRE CODE
-INCL. ALL APPLICABLE AMENDMENTS
LOS ANGELES MUNICIPAL CODE
-2000 EDITION PLANNING / ZONING CODE
-INCL. ALL APPLICABLE AMENDMENTS

LOT LEGAL DESCRIPTION

PROPERTY ADDRESS
100 S. THE GROVE DRIVE
LOS ANGELES, CA 90046

ADDRESS / LEGAL DESCRIPTION

PIN NO.	138B177 452/1158
LOT/PARCEL AREA (CALC.)	55,427.6 SF
THOMAS BROS. GRID	PAGE 633 - GRID C1
ASSESSOR'S PARCEL NO.	5512004905 / 5512004909
TRACT	RANCHO LA BREA
MAP REFERENCE	PAT 1-289/290
BLOCK	NONE
LOT	NONE
ARB (LOT CUT REFERENCE)	25 / 33
MAP SHEET	138B177

JURISDICTIONAL INFORMATION

COMMUNITY PLANNING AREA	WILSHIRE
AREA PLANNING COMMISSION	CENTRAL
NEIGHBORHOOD COUNCIL	MID CITY WEST
COUNCIL DISTRICT	CD 4 - NITHYA RAMAN
CENSUS TRACT #	2145.01
LADBS DISTRICT OFFICE	LOS ANGELES METRO

PLANNING AND ZONING INFORMATION

ZONE	OS-1XL-O
GENERAL PLAN LAND USE	OPEN SPACE
GENERAL PLAN FOOTNOTE(S)	YES

REVISION SCHEDULE

#	DESCRIPTION	DATE

SHEET INDEX

		SD	DD	PC	CD
G000 (PC)	COVER SHEET	●	●	●	
G001	GENERAL NOTES		●	●	
G002	GENERAL NOTES		●	●	
G003	GENERAL NOTES		●	●	
G004	GENERAL NOTES, SYMBOLS & ABBREVIATIONS		●	●	
G010	FORMS AND APPROVALS		●	●	
G011	FORMS AND APPROVALS		●	●	
G012	FORMS AND APPROVALS		●	●	
G030	PLOT PLAN / SITE INFORMATION	○	●	●	
G040	FLOOR AREA PLANS	●	●	●	
G045	PARKING AREA PLANS		●	●	
G050	OCCUPANCY AND EGRESS (EXISTING)		●	●	
G051	OCCUPANCY AND EGRESS (BOXCAR)		●	●	
G052	OCCUPANCY AND EGRESS (NEW)		●	●	
G056	ACCESSIBILITY DIAGRAMS		●	●	
G057	ACCESSIBILITY DIAGRAMS		●	●	
G058	ACCESSIBILITY DIAGRAMS		●	●	
G059	ACCESSIBILITY DIAGRAMS		●	●	
G060	ARCHITECTURAL SURVEY	●	●	●	
G061	ARCHITECTURAL SURVEY	●	●	●	
C100	TITLE SHEET		●	●	
C110	EXISTING CONDITIONS / DEMO PLAN		●	●	
C120	GRADING PLAN		●	●	
C130	UTILITY PLAN		●	●	
C140	HORIZONTAL CONTROL PLAN		●	●	
C150	LID PLAN		●	●	
C160	EROSION CONTROL PLAN		●	●	
L001	GENERAL NOTES & SHEET INDEX		●	●	
L002	CONTEXT PLAN		●	●	
L003	OVERALL REFERENCE PLAN		●	●	
L004	PROJECT KEY PLAN		●	●	
L101	TREE DISPOSITION PLAN		●	●	
L102	TREE DISPOSITION PLAN		●	●	
L200	CONSTRUCTION NOTES & SCHEDULE		●	●	
L201	CONSTRUCTION PLAN		●	●	
L202	CONSTRUCUTION PLAN		●	●	
L203	CONSTRUCTION PLAN		●	●	
L204	CONSTRUCTION PLAN		●	●	
L300	LAYOUT NOTES & SCHEDULE		●	●	
L401	ENLARGEMENT PLAN		●	●	
L501	ELEVATIONS & SECTIONS		●	●	
L502	ELEVATIONS & SECTIONS		●	●	
L503	ELEVATIONS & SECTIONS		●	●	
L504	ELEVATIONS & SECTIONS		●	●	
L601	CONSTRUCTION DETAILS - PAVING & EDGING		●	●	
L610	CONSTRUCTION DETAILS - WALLS		●	●	
L611	CONSTRUCTION DETAILS - WALLS		●	●	
L620	CONSTRUCTION DETAILS - FENCES, GATES, & RAILINGS		●	●	
L621	CONSTRUCTION DETAILS - FENCES, GATES, & RAILINGS		●	●	
L630	CONSTRUCTION DETAILS - AMENITIES		●	●	
L800A	PLANTING NOTES & SCHEDULE		●	●	
L800B	OVERALL PLANTING PLAN		●	●	
L801	PLANTING PLAN		●	●	
L802	PLANTING PLAN		●	●	
L803	PLANTING PLAN		●	●	
L804	PLANTING PLAN		●	●	
A100	DEMO PLAN	●	●	●	
A110	SITE PLAN	●	●	●	
A200	GRID / SLAB PLAN	●	●	●	
A211	FLOOR PLAN - OVERALL	●	●	●	
A212	FLOOR PLANS - EXISTING MUSEUM	●	●	●	
A213	FLOOR PLANS - EXISTING MUSEUM	●	●	●	
A214	FLOOR PLANS - ENTRY PAVILION, BOX CAR PAVILION	●	●	●	
A215	FLOOR PLANS - NORTH	●	●	●	
A216	FLOOR PLANS - SOUTH	●	●	●	
A219	ROOF PLAN	●	●	●	
A220	CANOPY ROOF PLAN		●	●	
A240	ENLARGED STAIR PLANS	○	●	●	
A241	ENLARGED STAIR PLANS		●	●	
A300	EXTERIOR ELEVATIONS - LEARNING CENTER	●	●	●	
A301	EXTERIOR ELEVATIONS - BOXCAR PAVILION		●	●	
A302	EXTERIOR ELEVATIONS - ENTRY PAVILION		●	●	
A400	BUILDING SECTIONS	●	●	●	
A401	BUILDING SECTIONS	●	●	●	
A403	BUILDING SECTIONS - CANOPY		●	●	
A450	WALL SECTIONS	○	●	●	
A451	WALL SECTIONS		●	●	
A452	WALL SECTIONS		●	●	
A453	WALL SECTIONS - ENTRY PAVILION		●	●	
A454	WALL SECTIONS - BOXCAR PAVILION		●	●	
A600	SCHEDULES	○	●	●	
A610	WINDOW WALL ELEVATIONS		●	●	
A611	WINDOW WALL ELEVATIONS		●	●	
A612	WINDOW WALL ELEVATIONS		●	●	
A620	DOOR SCHEDULE		●	●	
A650	WALL AND CEILING TYPES		●	●	
S000	SHEET LIST	○	●	●	
S001	GENERAL NOTES		●	●	
S002	GENERAL NOTES		●	●	
S003	GENERAL NOTES		●	●	
S004	STATEMENT OF SPECIAL INSPECTIONS		●	●	
S005	MOMENT FRAME DETAILS - LADBS QUALITY ASSURANCE SHEET 1 OF 3		●	●	
S006	MOMENT FRAME DETAILS - LADBS QUALITY ASSURANCE SHEET 2 OF 3		●	●	
S007	MOMENT FRAME DETAILS - LADBS QUALITY ASSURANCE SHEET 3 OF 3		●	●	
S008	STRUCTURAL OBSERVATION REQUIREMENTS		●	●	
S201	OVERALL FOUNDATION PLAN		●	●	
S201A	LEARNING CENTER FOUNDATION PLAN - SOUTH		●	●	
S201B	LEARNING CENTER FOUNDATION PLAN - NORTH		●	●	
S201C	ENTRY PAVILION/BOXCAR PAVILION FOUNDATION PLAN		●	●	
S211	OVERALL GROUND FLOOR PLAN		●	●	
S211A	LEARNING CENTER GROUND FLOOR PLAN - SOUTH		●	●	
S211B	LEARNING CENTER GROUND FLOOR PLAN - NORTH		●	●	
S211C	ENTRY PAVILION/BOXCAR PAVILION GROUND FLOOR PLAN		●	●	
S211L	OVERALL GROUND FLOOR PLAN - LOADING		●	●	
S221	OVERALL ROOF PLAN		●	●	
S221A	LEARNING CENTER ROOF PLAN - SOUTH		●	●	
S221B	LEARNING CENTER ROOF PLAN - NORTH		●	●	
S221C	ENTRY PAVILION/BOXCAR PAVILION ROOF PLAN		●	●	
S221L	OVERALL ROOF PLAN - LOADING		●	●	
S227	CANOPY ROOF FRAMING PLAN		●	●	
S301	LEARNING CENTER TRUSS ELEVATION		●	●	
S311	LEARNING CENTER STRUCTURAL MOMENT FRAME ELEVATIONS		●	●	
S312	LEARNING CENTER STRUCTURAL BRACED FRAME ELEVATIONS		●	●	
S313	ENTRY PAVILION STRUCTURAL MOMENT FRAME ELEVATIONS		●	●	
S323	BOX CAR PAVILION SPECIAL MOMENT FRAME ELEVATIONS		●	●	
S331	LEARNING CENTER AUDITORIUM SECTIONS		●	●	
S332	BOX CAR AND CANOPY ELEVATIONS		●	●	
S333	CANOPY ELEVATIONS		●	●	
S610	STRUCTURAL PILE DETAILS		●	●	
S611	STRUCTURAL PILE CAP DETAILS		●	●	
S612	STRUCTURAL PILE CAP DETAILS		●	●	
S620	REINFORCED SCHEDULE LAP AND DEVELOPMENT LENGTH SCHEDULE		●	●	
S621	REINFORCED SCHEDULE LAP AND DEVELOPMENT LENGTH SCHEDULE		●	●	
S622	TYPICAL SLAB ON GRADE DETAILS		●	●	
S623	TYPICAL SLAB ON GRADE DETAILS		●	●	
S624	TYPICAL CONCRETE DETAILS		●	●	
S625	TYPICAL CONCRETE DETAILS		●	●	
S626	TYPICAL CONCRETE DETAILS		●	●	
S630	TYPICAL STEEL DETAILS		●	●	
S631	TYPICAL STEEL DETAILS		●	●	
S632	TYPICAL STEEL DETAILS		●	●	
S633	TYPICAL STEEL DETAILS		●	●	
S634	TYPICAL STEEL DETAILS		●	●	
S635	TYPICAL STEEL DETAILS		●	●	
S636	TYPICAL STEEL DETAILS		●	●	
S637	TYPICAL STEEL DETAILS		●	●	
S638	SPECIAL MOMENT FRAME DETAILS		●	●	
S640	SFRS STEEL SPECIAL CONCENTRIC BRACED FRAME DETAILS		●	●	
S650	TYPICAL METAL DECK DETAILS		●	●	
S651	TYPICAL METAL DECK DETAILS		●	●	
S652	TYPICAL METAL DECK DETAILS		●	●	
S653	TYPICAL METAL DECK DETAILS		●	●	
S654	TYPICAL METAL DECK DETAILS		●	●	
S655	TYPICAL METAL DECK DETAILS		●	●	

GENERAL NOTES

1. THE STRUCTURAL, ELECTRICAL AND MECHANICAL GENERAL NOTES ARE IN ADDITION TO THE FOLLOWING NOTES; IF CONFLICTING NOTES ARE FOUND, THE MORE CONSERVATIVE SHALL TAKE PRECEDENCE.

2. THE GENERAL NATURE OF THESE NOTES SHALL IN NO WAY DIMINISH THE CONTRACTOR AND SUB-CONTRACTORS FROM COMPLETING ALL WORK IN STRICT CONFORMANCE WITH ALL ASPECTS OF THE BUILDING CODES AND WITH OTHER RULES, REGULATIONS AND GOVERNING ORDINANCES. EACH SUB-CONTRACTOR SHALL BECOME FAMILIAR WITH ANY PART OF THE AFOREMENTIONED BUILDING CODES, RULES, ETC. THAT MAY AFFECT HIS WORK. IN THE EVENT THE FOLLOWING CONSTRUCTION DOCUMENTS HAVE NOT INCLUDED DETAILS PERTAINING TO SPECIFIC CONDITIONS, BY ACCEPTING THE CONTRACT, THE CONTRACTOR AND SUBCONTRACTORS AGREE TO INCORPORATE AND BUILD TO THE PREVAILING BUILDING CODES, REGULATIONS AND INDUSTRY STANDARDS.

3. SCOPE OF PERMIT
A. LIMIT OF AUTHORIZATION. THE ISSUANCE OF A PERMIT IS NOT AN APPROVAL OR AN AUTHORIZATION OF THE WORK SPECIFIED THEREIN. A PERMIT IS MERELY AN APPLICATION FOR INSPECTION. THE ISSUANCE OF WHICH ENTITLES THE PERMITTEE TO INSPECTION OF THE WORK, WHICH IS DESCRIBED THEREIN. PERMITS ISSUED UNDER THE REQUIREMENTS OF THIS CODE SHALL NOT RELIEVE THE OWNER OF RESPONSIBILITY FOR SECURING REQUIRED PERMITS FOR WORK TO BE DONE WHICH IS REGULATED BY ANY OTHER CODE, DEPARTMENT OR DIVISION OF THE CITY IN WHICH THE WORK IS PERFORMED.
B. VALIDITY OF OTHER LAWS. NEITHER ISSUANCE OF A PERMIT NOR THE APPROVAL OF THE BUILDING DEPARTMENT OF ANY DOCUMENT SHALL CONSTITUTE AN APPROVAL OF ANY VIOLATION OF ANY PROVISION OF THIS CODE OR OF ANY OTHER LAW OR ORDINANCE, AND A PERMIT OR OTHER DOCUMENT PURPORTING TO GIVE AUTHORITY TO VIOLATE ANY LAW SHALL NOT BE VALID WITH RESPECT THERETO.

4. ALL WORK, CONSTRUCTION AND MATERIALS SHALL COMPLY WITH ALL PROVISIONS OF THE CURRENT EDITION OF THE GOVERNING BUILDING CODE AND WITH OTHER RULES, REGULATIONS, AND GOVERNING ORDINANCES. BUILDING CODE REQUIREMENTS TAKE PRECEDENCE OVER THE DRAWINGS AND IT SHALL BE THE RESPONSIBILITY OF ANYONE SUPPLYING LABOR, MATERIAL OR BOTH TO INSTALL HIS WORK IN CONFORMANCE WITH THE BUILDING CODE AND TO BRING TO THE ATTENTION OF THE ARCHITECT ANY DISCREPANCIES OR CONFLICTS BETWEEN THE REQUIREMENTS OF THE BUILDING CODE AND THE DRAWINGS. THE ABOVE SHALL APPLY TO ALL DIVISIONS.

5. DIMENSION & CONDITIONS AT THE JOB SITE SHALL BE VERIFIED BY THE CONTRACTOR(S). DISCREPANCIES IN THE DRAWINGS OR BETWEEN THE DRAWINGS AND ACTUAL FIELD CONDITIONS SHALL BE REPORTED TO THE ARCHITECT IN WRITING. CORRECTED DRAWINGS AND/OR INSTRUCTIONS SHALL BE ISSUED BY THE ARCHITECT PRIOR TO THE INSTALLATION OF ANY WORK.

6. ELECTRICAL, PLUMBING AND MECHANICAL PLANS SHALL BE SUBMITTED FOR PLAN CHECK AND BE APPROVED PRIOR TO THE BEGINNING OF CONSTRUCTION. ALL WORK IN THESE AREAS SHALL BE IN CONFORMANCE WITH THE APPLICABLE BUILDING CODES. SPECIAL REFERENCE IS HEREBY MADE TO THE SEISMIC BRACING, TIE DOWNS, ETC. & CODE REQUIRED FOR APPLIANCES, EQUIPMENT, ETC.

7. CONSTRUCTION SAFETY:
A. ALL WORK SHALL CONFORM TO THE OSHA CONSTRUCTION SAFETY REQUIREMENTS.
B. PEDESTRIAN PROTECTION SHALL CONFORM TO THE REQUIREMENTS OF THE LOCAL BUILDING CODE.

8. TEMPORARY TOILET: MAINTAIN SANITARY TOILET FACILITIES DURING CONSTRUCTION.

9. SITE COORDINATION: CONTRACTOR TO COORDINATE TRADES & EXISTING CONDITION WITH INSTALLATION & OPERATION FOR EACH SYSTEM. SEE SUBMITTAL SPECIFICATION.

10. STAIRS - SEE ADA GENERAL NOTES

11. RAMP REQUIREMENTS - SEE ADA GENERAL NOTES

12. GUARDRAILS: ALL UNENCLOSED FLOOR AND DOOR OPENINGS, OPEN AND GLAZED SIDES OF LANDINGS AND STAIRS,BALCONIES OR PORCHES WHICH ARE MORE THAN 30" ABOVE GRADE, AND ROOFS USED FOR OTHER THAN SERVICE OF THE BUILDING SHALL BE PROTECTED BY A GUARDRAIL WITH A MINIMUM HEIGHT OF 42". OPEN GUARDRAILS AND STAIR RAILINGS SHALL HAVE INTERMEDIATE RAILS OR AN ORNAMENTAL PATTERN SUCH THAT NO OBJECT 4" IN DIAMETER CAN PASS THROUGH. GUARD RAILS SHALL BE DESIGNED FOR 50. LB/FT. LATERAL LOAD AT EXIT FACILITIES SERVING AN OCCUPANT LOAD > 50, 20.LB/FT. LATERAL LOAD ELSEWHERE. SEE STRUCTURAL CALCULATIONS AND DETAILS.

13. BATHROOMS:
A. REFER TO DIVISION 9, DRYWALL.
B. IN OTHER THAN DWELLING UNITS, (PUBLIC AREAS, TOILETS, SHOWERS, SAUNAS, ETC.) TOILET ROOM FLOORS SHALL HAVE A SMOOTH, HARD, NON-ABSORBENT, MATERIAL SUCH AS PORTLAND CEMENT, CONCRETE, CERAMIC TILE, OR OTHER APPROVED MATERIAL WHICH EXTENDS UPWARD ONTO THE WALLS AT LEAST 5". WALLS WITHIN WATER CLOSET COMPARTMENTS AND WALLS WITHIN 2 FT. OF THE FRONT AND SIDES OF URINALS SHALL BE SIMILARLY FINISHED TO A HEIGHT OF 4 FT. MINIMUM.

14. CEILING PROJECTIONS: THERE WILL BE NO PROJECTIONS, (LIGHT FIXTURES, ETC.) BELOW THE 7'-0" HIGH CEILINGS AT HALLWAYS, CLOSETS, KITCHENS, ETC. IF PROJECTIONS SUCH AS LIGHT FIXTURES ARE BELOW 7'-0" THEN MUST PROJECT NO MORE THAN 4" FROM THE FINISH SURFACE.

15. TRASH ENCLOSURES: SHALL BE OF NON-COMBUSTIBLE CONSTRUCTION.

16. FIRE ASSEMBLIES:
A. ALL FIRE ASSEMBLIES SHALL BE LABELED BY AN APPROVED TESTING AGENCY EXCEPT OVERSIZE FIRE DOORS WHICH SHALL BE PROVIDED WITH A CERTIFICATE OF INSPECTION FURNISHED BY AN APPROVED TESTING AGENCY VERIFYING THAT THE OVERSIZE DOOR COMPLIES WITH THE DESIGN MATERIALS AND CONSTRUCTION REQUIREMENTS.
B. A SIGN SHALL BE DISPLAYED PERMANENTLY NEAR OR ON EACH REQUIRED FIRE DOOR IN LETTERS NOT LESS THAN 1" HIGH TO READ AS FOLLOWS: DO NOT OBSTRUCT ANY FIRE DOOR

17. FIRE RESISTIVE WALLS OR PARTITIONS:
A. SHALL CONFORM TO LOCAL BUILDING CODE.
B. DIVISION OR DRAFT ENCLOSURE WALLS: SHALL NOT BE PIERCED BY ELECTRICAL PANELS, FIRE HOSE CABINETS, STOVE VENTS, OR ANY OTHER ITEM. OPENINGS INTO 1-HOUR SHAFTS SHALL BE PROTECTED BY 1-HOUR FIRE-PROTECTED ASSEMBLIES WITH SELF-CLOSERS.
OPENINGS INTO 2-HOUR SHAFTS SHALL BE PROTECTED WITH 1 ½ HOUR FIRE-PROTECTED ASSEMBLIES WITH SELF-CLOSERS. PROVIDE FIRE DAMPERS RATED FOR OPENINGS WHERE DUCTS PIERCE SHAFT ENCLOSURES. SLEEVES AND INSTALLATION PROCEDURES SHALL BE APPROVED BY BUILDING INSPECTOR PRIOR TO INSTALLATION.
C. BLDG. SEPARATION WALLS: SHALL HAVE A MINIMUM FIRE RESISTANCE OF 1 HOUR WITH ALL OPENINGS WITHIN THE WALL HAVING A 3/4 HOUR FIRE RESISTANCE AND SHALL CONFORM TO THE REQUIREMENTS OF THE LOCAL BUILDING CODE.
D. 3-HOUR SEPARATIONS: 8" CONCRETE BLOCK WITH ALL CELLS GROUTED SOLID.
E. 1-HOUR CONSTRUCTION: BUILDING SHALL BE OF ONE-HOUR FIRE RESISTIVE CONSTRUCTION WHERE NOTED ON DRAWINGS. 1 LAYER 5/8" TYPE X GYP. BD. ON EACH SIDE OF 16 GA. METAL STUD FRAME CONSTITUTES ONE-HOUR CONSTRUCTION.

18. OPENINGS:
A. FLOOR - CEILING OR ROOF - CEILING OPENINGS.
B. OPENINGS IN WALLS AND PARTITIONS SHALL BE PROTECTED. WHERE FIRE-RATED WALLS AND PARTITIONS REQUIRE PROTECTED OPENINGS, THE FOLLOWING PENETRATIONS INTO OR THROUGH SUCH CONSTRUCTION ARE PERMITTED:
1) COPPER OR FERROUS PIPES OR CONDUITS MAY PENETRATE WALLS OR PARTITIONS, IF FIRE STOPPED
AS REQUIRED BY THE BUILDING CODE.
2) STEEL ELECTRICAL OUTLET BOXES NOT EXCEEDING 16 SQ. IN. IN AREA, PROVIDED THAT THE AREA OF SUCH OPENINGS DOES NOT AGGREGATE MORE THAN 100 SQ. IN. FOR ANY 100SQ.FT. OF WALL OR PARTITION AREA. OUTLET BOXES ON OPPOSITE SIDES OF WALLS OR PARTITIONS SHALL BE SEPARATED BY A HORIZONTAL DISTANCE OF 24". THE SPACE BETWEEN THE PENETRATING MATERIALS DESCRIBED IN ITEMS 1 & 2 MOVEMENT OF FLAMES AND GASES.

C. CORRIDOR CONSTRUCTION: WALLS AND CEILINGS OF 5/8" TYPE "X" GYPSUM WALL BOARD INSTALLED PER CHAPTER 43, OF THE BUILDING CODE, FOR 1-HOUR CONSTRUCTION.
1) OPENINGS: WHERE CORRIDOR WALLS ARE REQUIRED TO BE OF 1-HOUR FIRE RESISTIVE CONSTRUCTION, EVERY DOOR SHALL BE PROTECTED BY A TIGHT-FITTING SMOKE AND DRAFT CONTROL DOOR ASSEMBLY HAVING A FIRE-PROTECTION RATING OF NOT LESS THAN 3/4 HOUR. OTHER CORRIDOR INTERIOR OPENINGS SHALL BE FIXED AND PROTECTED BY APPROVED 1/4" THICK WIRE GLASS INSTALLED IN STEEL FRAMES.

D. FLOORS: BUILDING PAPER SHALL BE LAID BETWEEN SUBFLOOR AND FINISHED FLOOR.
E. WALLS: 5/8" APPROVED TYPE "X" GYPSUM WALLBOARD FASTENED METAL STUDS PER BUILDING CODE; JOINTS CEMENTED AND TAPED.
F. CEILINGS: ANY ASSEMBLY SPECIFIED PER LOCAL BUILDING CODE

19. PARTS OR PORTIONS OF STRUCTURES, NON-STRUCTURAL COMPONENTS AND THEIR ANCHORAGE TO THE MAIN STRUCTURAL SYSTEM SHALL BE DESIGNED FOR LATERAL FORCES.

METAL (SEE STRUCTURAL GENERAL NOTES)

CARPENTRY

1. GENERAL: ALL REQUIREMENTS OF THE CALIFORNIA BUILDING CODE SHALL BE MET.

2. STUD WALLS: TYPICAL WALLS SHALL BE FRAMED WITH 20 GAUGE METAL STUDS AT 16" O.C. EXCEPT WHERE NOTED OTHERWISE.
AMERICAN STEEL FRAMING SOLUTIONS. ICC-ESR 2915

3. FIRE STOPS FOR STUD WALLS AND PARTITIONS: ENCLOSED SPACES IN STUD WALLS, PARTITIONS AND FURRED WALLS SHALL BE FIRE-STOPPED AT THE TOP AND BOTTOM AND ALSO AT THE MID-POINT IN WALLS MORE THAN 10 FEET HIGH. THE DISTANCE BETWEEN FIRE-STOPS IN WALLS AND PARTITIONS SHALL NOT EXCEED 10 FEET MEASURED HORIZONTALLY OR VERTICALLY. TOP AND BOTTOM PLATES WHICH FILL ALL SPACES BETWEEN STUDS AND FURRING SHALL BE CONSIDERED FIRE-STOPS.

4. NOTCHING & BORING: AT EXTERIOR WALLS AND BEARING WALLS STUDS SHALL NOT BE NOTCHED MORE THEN 25 % WIDTH OF STUD. AT NON-BEARING PARTITIONS NOT MORE THAN 40% WIDTH OF STUDS. BORED HOLES: MAX DIAMETER 40% ANY STUD AND 60% NON-BEARING STUD PARTITIONS OR IN ANY WALL WHERE EACH BORED STUD IS DOUBLED, PROVIDED NOT MORE THEN 2 SUCH SUCCESSIVE DOUBLED STUDS ARE SO BORED: NO BORED HOLE CLOSER THEN 5 / 8" TO EDGE OF STUD. (SEE DIVISION 15, PLUMBING NOTES WITHIN THESE GENERAL NOTES)

5. PENETRATIONS: PENETRATIONS IN WALLS REQUIRING PROTECTED OPENINGS SHALL BE FIRE-STOPPED. FIRESTOPPING SHALL BE AN APPROVED MATERIAL SECURELY INSTALLED AND CAPABLE OF MAINTAINING ITS INTEGRITY WHEN SUBJECTED TO TEST TEMPERATURES PRESCRIBED IN U.B.C. STANDARD NO. 43-1 FOR THE SPECIFIC WALL OR PARTITION.

6. PROVIDE DRAFT STOPS FOR FLOOR-CEILING ASSEMBLIES. DRAFT STOPS ARE REQUIRED ABOVE AND IN LINE WITH WALLS SEPARATING TENANT SPACES FROM EACH OTHER AND FROM OTHER USES.

7. PROVIDE ACOUSTIC ISOLATION WHERE REQUIRED BY DETAILS AND SPECIFICATIONS

DOORS & WINDOWS

1. EXIT DOORS: EVERY EXIT DOOR SHALL BE OPENABLE FROM THE INSIDE WITHOUT THE USE OF A KEY OR ANY SPECIAL KNOWLEDGE OR EFFORT. SPECIAL LOCKING DEVICES SHALL BE OF AN APPROVED TYPE.. EXIT DOOR MUST OPEN OVER A LANDING NOT MORE THAN 1 / 2" BELOW THE THRESHOLD. (CBC SEC. 1015) EXIT DOORS SERVING 50 OR MORE OCCUPANTS SHALL OPEN IN THE DIRECTION OF EGRESS.

2. FIRE DOORS SHALL BE SELF CLOSING (OR AUTOMATIC CLOSING WHERE REQUIRED) LABELED "FIRE ASSEMBLIES". INCLUDING FRAME AND HARDWARE EQUIPPED WITH METAL THRESHOLD, AND WITHOUT MAIL SLOTS AND VENTS OPENINGS.

3. GLAZING:
A. GLASS THICKNESS, STRENGTH, MATERIALS AND METHOD OF INSTALLATION SHALL CONFORM WITH REQUIREMENTS OF LOCAL BUILDING CODES.
B. GLASS AND GLAZING IN LOCATIONS WHICH MAY BE SUBJECT TO HUMAN IMPACT SUCH AS FRAMELESS GLASS DOORS, GLASS PANELS, GLASS EXIT AND ENTRANCE DOORS, SLIDING GLASS DOORS, SHOWER DOORS, TUB ENCLOSURES, AND STORM DOORS SHALL MEET THE REQUIREMENTS SET FORTH IN THE LOCAL BUILDING CODE.
C. GLASS DOORS, ADJACENT PANELS AND ALL GLAZED OPENINGS WITHIN 18" OF THE ADJACENT FLOOR, WHOSE LEAST DIMENSION IS GREATER THAN 18", SHALL BE OF GLASS APPROVED FOR IMPACT HAZARD.
D. ALL GLASS MUST COMPLY WITH U.S. CONSUMER SAFETY PROTECTION COMMISSION REQUIREMENTS.

4. SMOKE AND DRAFT CONTROL: DOORS REQUIRED TO HAVE SMOKE AND DRAFT CONTROL ASSEMBLIES SHALL BE PROVIDED WITH A GASKET SO INSTALLED AS TO PROVIDE A SEAL WHERE THE DOOR MEETS THE STOP ON BOTH SIDES AND ACROSS THE TOP.

5. SECURITY PROVISIONS: ALL OPENINGS NOTED WITH SYMBOL ARE SECURITY OPENINGS AND THE FOLLOWING NOTES SHALL APPLY: GLAZED OPENINGS SHALL CONFORM TO THE REQUIREMENTS OF SECURITY PROVISION OF LOCAL BUILDING CODE. ENTRY DOORS SHALL BE ARRANGED SO THAT THE OCCUPANT HAS A VIEW OF THE AREA IMMEDIATELY OUTSIDE THE DOOR. SUCH A VIEW MAY BE PROVIDED WITH A DOOR VIEWER.

6. SWINGING DOORS:
A. ALL PIN-TYPES HINGES WHICH ARE ACCESSIBLE FROM OUTSIDE THE SECURED AREA WHEN THE DOOR IS CLOSED SHALL HAVE NON-REMOVABLE HINGE PINS. IN ADDITION THEY SHALL HAVE MINIMUM 1 / 4" DIAMETER STEEL JAMB STUD WITH 1 / 4" MINIMUM PROJECTION UNLESS THE HINGES ARE SHAPED TO PREVENT REMOVAL OF THE DOOR IF THE HINGE PINS ARE REMOVED.
B. THE STRIKE PLATE FOR LATCHES AND THE HOLDING DEVICE FOR PROJECTING DEADBOLTS IN CONSTRUCTION SHALL BE SECURED TO THE JAMB AND THE WALL FRAMING WITH SCREWS OF NOT LESS THAN TWO 1 1/2" LENGTH.
C. DEADBOLTS SHALL CONTAIN HARDENED INSERTS.
D. STRAIGHT DEADBOLTS SHALL HAVE A MINIMUM THROW OF 1" AND EMBEDMENT OF NOT LESS THAN 5/8" INTO THE HOLDING DEVICE RECEIVING THE PROJECTED BOLT.
E. A HOOK-SHAPED OR AN EXPANDING-LUG DEADBOLT SHALL HAVE A MINIMUM THROW OF 3 /4".
F. HOLLOW CORE DOOR OR DOORS LESS THAN 1-3 /8" THICKNESS SHALL BE COVERED ON THE INSIDE FACE WITH 16 GAUGE SHEET METAL ATTACHED WITH SCREWS AT 6" ON CENTER AROUND THE PERIMETER OR EQUIVALENT.
G. GLASS DOORS SHALL HAVE TEMPERED/ LAMINATED GLAZING FULLY COMPLYING WITH THE LOCAL BUILDING CODE.
H. DOORS SHALL BE PROVIDED WITH A KEY-OPERATED LOCKS ON THE EXTERIOR AND SHALL BE OPENABLE FROM THE INTERIOR WITHOUT A KEY, SPECIAL KNOWLEDGE OR SPECIAL EFFORT.
I. GLAZED OPENINGS WITHIN 40" OF THE LOCKING DEVICE OF THE DOOR OR WINDOW SHALL BE FULLY TEMPERED GLASS OR APPROVED BURGLARY RESISTANT MATERIAL, OR SHALL BE PROTECTED BY METAL BARS, SCREENS OR GRILLS HAVING A PATTERN SUCH THAT THE MAX. DIMENSION OF ANY OPENING DOES NOT EXCEED 2"
J. DOOR LOCKING DEVICES SHALL BE A TYPE THAT WILL BE READILY DISTINGUISHABLE AS LOCKED. EXIT DOORS USED IN PAIRS SHALL HAVE APPROVED AUTOMATIC FLUSH BOLTS.
K. ONE-HOUR RATED DOOR ASSEMBLIES SHALL HAVE NON-COMBUSTIBLE STILES EXTENDING THE FULL WIDTH OF THE DOOR FRAME. THE ASSEMBLY SHALL BE CAPABLE OF WITHSTANDING A MAXIMUM 450 F TEMPERATURE RISE ABOVE AMBIENT TEMPERATURE AFTER 30 MINUTES OF FIRE TEST.

7. CYLINDER GUARDS: SHALL BE INSTALLED ON ALL CYLINDER LOCKS WHENEVER THE CYLINDER PROJECTS BEYOND THE FACE OF THE DOOR OR IS OTHERWISE ACCESSIBLE TO GRIPPING TOOLS.

FINISHES

1. INTERIOR FINISHES SHALL COMPLY WITH THE FLAME SPREAD AND SMOKE DENSITY REQUIREMENTS OF THE LOCAL BUILDING CODE. SEE FIRE GENERAL NOTES.

2. PLASTERED SURFACES: ON WALLS, CEILINGS, AND ROOF SOFFITS EXPOSED TO WEATHER SHALL HAVE EXTERIOR LATH AND PLASTER.

3. LATH AND WALLBOARD: IN-PLACE INSPECTION IS REQUIRED FOR ALL INTERIOR AND EXTERIOR LATH AND/OR WALLBOARD BEFORE ANY PLASTERING IS APPLIED OR ANY JOINTS AND FASTENERS HAVE BEEN TAPED AND FINISHED.

4. DRYWALL:
A. DRYWALL SHALL CONFORM TO THE CALIFORNIA BUILDING CODES.
B. DRYWALL LOCATED BEHIND REQUIRED NON-ABSORBENT SURFACES SHALL BE WATER-RESISTANT.
C. ALL DRYWALL SURFACES SHALL BE TAPED, PATCHED, SANDED, PRIMED, AND PAINTED (COLOR BY ARCHITECT) UNLESS NOTED OTHERWISE.
D. PROVIDE CORNER BEAD AND J-MOLD AT ALL EXPOSED DRYWALL EDGES AND TERMINATIONS.

SPECIAL CONSTRUCTION

1. SOUND TRANSMISSION CONTROL: REFER TO DRAWING AND SPECIFICATION STANDARDS FOR SOUND RATED PARTITIONS AND IMPACTED RATED FLOOR/CEILING ASSEMBLIES.
A. WALLS: SHALL HAVE AIRBORNE SOUND CONTROL WITH MINIMUM STC RATING OF 50.
B. FLOORS/CEILINGS: SHALL HAVE AIRBORNE SOUND CONTROL WITH MINIMUM STC RATING OF 50 AND IMPACT SOUND CONTROL WITH MINIMUM LLC RATING OF 50.

2. ADDITIONAL REQUIREMENTS:
A. AN APPROVED PERMANENT, AND RESILIENT ACOUSTICAL SEALANT IS REQUIRED ALONG THE JOINT BETWEEN THE FLOOR AND THE SEPARATION WALLS. SEE ACOUSTICAL SPECIFICATIONS.
B. ALL PENETRATIONS INTO SOUND RATED PARTITIONS OR FLOOR/CEILING ASSEMBLIES WILL BE SEALED WITH APPROVED RESILIENT SEALANT. SEE DRAWINGS AND ACOUSTICAL SPECIFICATIONS.
C. ALL RIGID CONDUIT, DUCTS, PLUMBING PIPES AND APPLIANCE VENTS LOCATED IN SOUND ASSEMBLIES WILL BE ISOLATED FROM THE BUILDING CONSTRUCTION BY MEANS OF RESILIENT SLEEVES, MOUNTS OR MINIMUM 1 /4" THICK APPROVED RESILIENT MATERIAL. (EXCEPTION: GAS PIPING NEED NOT BE ISOLATED).
D. METAL VENTILATING AND CONDITIONED AIR DUCTS LOCATED IN SOUND ASSEMBLIES WILL BE LINED. (EXCEPTION: DUCTS SERVING ONLY KITCHEN COOKING FACILITIES, AND BATHROOMS NEED NOT BE LINED.)
E. WALL MOUNTED LAVATORIES AND TOILETS ARE NOT PERMITTED ON SOUND RATED PARTITIONS.
F. COMBUSTION AIR, KITCHEN AND BATHROOM EXHAUST DUCTS WITHIN SOUND-SEPARATION ASSEMBLIES SHALL BE WRAPPED WITH APPROVED INSULATION.

3. ELECTRICAL REQUIREMENTS: AN OUTLET BOX IS DEFINED AS A BOX USED FOR RECEPTACLES, SWITCHES, SURFACE-MOUNTED LIGHTING FIXTURES, JUNCTION POINTS, TELEPHONE, THERMOSTATS, TELEVISION USES, ETC. NO BOX DIMENSION SHALL EXCEED 6". SEE ELECTRICAL DRAWINGS AND SPECIFICATIONS.

A. ONLY OUTLET BOXES AND A CEILING EXHAUST FAN IN THE BATHROOM WILL BE PERMITTED IN WALLS AND CEILINGS OF SOUND RATED CONSTRUCTION. ALL OTHER EQUIPMENT AND DEVICES WHICH INCLUDE RECESSED FIXTURES, PANEL BOARDS, HEATERS, KITCHEN EXHAUST FAN, SOUND PRODUCING EQUIPMENT, BELLS, INTERCOMS, ETC. SHALL NOT BE INSTALLED IN THESE SOUND RATED WALLS AND CEILINGS UNLESS PRIOR APPROVAL HAS BEEN OBTAINED FROM THE ACOUSTICAL ENGINEER.

B. OUTLET BOXES MAY BE INSTALLED IN THE SOUND RATED WALLS AND CEILINGS AS FOLLOWS:
1) BOXES WHICH PENETRATE THE WALL IN ONE AREA OR OCCUPANCY SHALL NOT BE INSTALLED IN THE SAME SPACE BETWEEN STUDS CONTAINING A BOX WHICH PENETRATES INTO ANOTHER AREA OR OCCUPANCY.
2) THERE SHALL BE ONE SOLID STUD BETWEEN OUTLET BOXES AND MINIMUM 24" SEPARATION FROM CENTER TO CENTER.
3) OUTLET BOXES SHALL HAVE A DEPTH OF NOT MORE THEN 1-1/2", SO AS TO ALLOW THE REQUIRED 2" UNCOMPRESSED INSULATION TO BE INSTALLED IN A STANDARD 2" X 4" WALL. ON WALLS OF DEEPER DIMENSIONS, BOXES OF GREATER DEPTH MAY BE USED.
4) BACK AND SIDES OF BOXES SHALL BE SEALED WITH 1/8" RESILIENT SEALANT AND BACKED WITH 2" MINIMUM MINERAL FIBER INSULATION (TV, TELEPHONE AND INTERCOM OUTLETS MUST BE INSTALLED IN BOXES ACCORDINGLY).
5) CONDUITS OR RACEWAYS (STUBOUTS) MAY PENETRATE THE SOUND RATED WALLS OR CEILINGS, PROVIDED THE CONDUIT IS COVERED AT THE PENETRATION POINT WITH A PERMANENTLY RESILIENT SEALANT.
6) THE REQUIREMENTS FOR OUTLET BOXES INSTALLED FOR TELEVISIONS, TELEPHONES AND THERMOSTATS (ELECTRICAL AND PNEUMATIC) SHALL BE THE SAME AS FOR RECEPTACLES OR SWITCHES. PLASTER RINGS, OPEN BACK BOXES, OR MOUNTING PLATES SHALL NOT BE PERMITTED.
7) WHERE METALLIC RACEWAYS MATERIAL (RIGID METAL CONDUIT, STEEL TUBE) IS INSTALLED IN SOUND RATED FLOOR JOIST WITH A RESILIENT MATERIAL AT THE POINTS OF SUPPORT. AT THE POINT WHERE THE RACEWAYS PASS THROUGH HOLES OR NOTCHES, CARE SHOULD BE TAKEN TO INSURE THAT THE RACEWAY DOES NOT TOUCH THE SURFACE OF THE JOISTS. THE RESILIENT MATERIAL USED MAY BE RUBBER, CARPET PADDING, OR OTHER APPROVED MATERIAL.
8) WHEN RIGID METALLIC RACEWAY IS INSTALLED IN THE FLOOR-CEILING SPACES, THE SPACE SHALL HAVE A MINIMUM OF 2" OF MINERAL INSULATION BELOW. CARE SHOULD BE TAKEN DURING INSTALLATION OF THE RACEWAY TO ALLOW FOR THIS 2" OF NONCOMPRESSED INSULATION BELOW.
C. FLOOR-CEILING ASSEMBLIES BETWEEN RESIDENTIAL AREAS AND EQUIPMENT PENTHOUSES (AC UNITS ETC.) SHALL BE INSTALLED IN ACCORDANCE TO MEET THE SOUND SEPARATION REQUIREMENTS.
D. DOORS TO UNITS FROM INTERIOR CORRIDORS ARE REQUIRED TO HAVE A MINIMUM STC RATING OF 30 (LAMINATED 1 3/4" SOLID-CORE DOORS WITH RESILIENT STOPS AND GASKETS MEET THIS REQUIREMENT).
E. MINERAL FIBER INSULATION SHALL BE INSTALLED IN JOIST SPACES TO A POINT 12" BEYOND THE PIPE OR DUCT, WHENEVER A PLUMBING PIPE, OR DUCT PENETRATES A FLOOR-CEILING ASSEMBLY FROM WITHIN A WALL.
F. SURFACE MATERIAL (INCLUDING CARPETS) ARE PART OF THE FLOOR-CEILING ASSEMBLY AND MUST BE INSTALLED AND INSPECTED BEFORE THE CERTIFICATE OF OCCUPANCY IS ISSUED.
G. OUTLETS IN A 2 HOUR FIRE RESISTIVE SEPARATION WALL MUST TERMINATE IN AN ALL STEEL FLUSH MOUNT BOX.
10. FIRE SPRINKLER SYSTEMS MUST BE APPROVED BY PLUMBING DIVISION PRIOR TO FINAL OCCUPANCY. CONTRACTOR TO PROVIDE DESIGN BUILD OF ENTIRE SYSTEM AND OBTAIN ALL NECESSARY APPROVAL FORM PLUMBING DIVISION, BUILDING DEPARTMENT, AND STATE FIRE MARSHALL.

MISCELLANEOUS NOTES

1. UNPROTECTED OPENINGS ARE PROHIBITIVE IN ENVELOPE PROJECTION TYPE CEILINGS. ALL DUCT OPENINGS REQ. FIRE DAMPERS AND ARE LIMITED TO 100 SQ. IN. OF CEILING ACCESS OPENINGS REQ. 1HR. FIRE RATED ASSEMBLIES W/ CLOSING DEVICES APPROVED BY THE BUILDING DEPARTMENT. SEE MECHANICAL NOTES.

2. SEISMIC REQUIREMENTS: PERIMETER MEMBERS. A MINIMUM WALL ANGLE SIZE OF AT LEAST A 2" (51MM) HORIZONTAL LEG SHALL BE USED AT PERIMETER WALLS & INTERIOR FULL HEIGHT PARTITION. THE FIRST CEILING TILE SHALL MAINTAIN 3/4" (19MM) CLEAR FROM THE FINISH WALL SURFACE. AN EQUIVALENT ALTERNATIVE DETAIL THAT WILL PROVIDE SUFFICIENT MOVEMENT DUE TO ANTICIPATED LATERAL BUILDING DISPLACEMENT MAY BE USED IN LIEU OF THE LONG LEG ANGLE SUBJECT TO THE APPROVAL OF THE SUPERINTENDENT OF BUILDING DEPARTMENT.

FIRE GENERAL NOTES:

CORRIDOR & OPENINGS
1. DOORS OPENING INTO ONE-HOUR FIRE-RESISTIVE CORRIDORS SHALL BE PROTECTED WITH A SMOKE OR DRAFT-STOP FIRE ASSEMBLY HAVING A MINIMUM 20 MINUTE RATING. DOORS MUST BE SELF CLOSING.

2. FIRE BLOCKING MUST BE PROVIDED IN ACCORDANCE WITH SECTION 708.2.1 IN OPENINGS AROUND VENTS, PIPES, DUCTS, CHIMNEYS, FIREPLACES AND SIMILAR OPENINGS WHICH AFFORD A PASSAGE FOR FIRE AT CEILING AND FLOOR LEVELS, WITH NONCOMBUSTIBLE MATERIALS.

3. PROVIDE 2 HOUR FIRE-RATED CAULK BY APPROVED MANUFACTURER AROUND ALL FLOOR PENETRATIONS.

INTERIOR FINISHES & FLAME RETARDANCE:
1. INTERIOR WALL AND CEILING FINISHES FOR LOBBY SPACES SHALL NOT EXCEED A FLAME-SPREAD CLASSIFICATION OF 200 (CLASS III)

2. INTERIOR WALL AND CEILING FINISHES FOR EXIT CORRIDORS SHALL NOT EXCEED A FLAME-SPREAD CLASSIFICATION OF 75 (CLASS II)

3. INTERIOR WALL AND CEILING FINISHES FOR ENCLOSED STAIRWAYS SHALL NOT EXCEED A FLAME-SPREAD CLASSIFICATION OF 25 (I)

EXITS
1. ALL EXITS MUST BE CONTINUOUS AND TERMINATE IN A PUBLIC WAY OR EXIT COURT LEADING TO PUBLIC WAY OR AN APPROVED REFUGE AREA. (TITLE 24)

2. AN EXIT WALKWAY WITH A MINIMUM WIDTH OF 44" SHALL BE MAINTAINED CONTINUOUSLY TO A PUBLIC WAY. EXIT PATHS OR WALKWAYS TO PUBLIC WAY SHALL BE CLEARLY DELINEATED. EXIT PATHS MAY BE DELINEATED BY PAINTED LINES, RAILINGS, BARRIER POSTS, WALKS, OR OTHER APPROVED MEANS.

3. STAIR ENCLOSURES REQUIRED FOR ALL INTERIOR STAIRWAYS SERVING FOUR OR MORE STORIES SHALL EXTEND TO ROOF SURFACE AND BE CONTINUOUS UNTIL EGRESS IS PROVIDED FROM BUILDING TO A PUBLIC WAY WITHOUT OBSTRUCTIONS, SUCH AS INTERVENING DOORS AND GATES.

4. EXIT ENCLOSURE REQUIRED FOR ALL PUBLIC STAIRWAYS ENCLOSURE SHALL BE CONTINUOUS UNTIL EGRESS IS PROVIDED FROM BUILDING. - ALL OPENINGS TO BE PROTECTED BY 1HR. SELF CLOSING FIRE ASSEMBLIES. NO OPENINGS OTHER THAN EXIT DOORWAYS & EXTERIOR WALL OPENINGS ARE PERMITTED.

5. EXIT DOOR SHALL SWING IN THE DIRECTION OF EXIT TRAVEL WHEN SERVING 50 OR MORE PERSONS AND ANY HAZARDOUS OR GROUP H OCCUPANCY.

6. EXIT DOORWAYS SHALL NOT BE LESS THAN 36" IN WIDTH AND NOT LESS THAN 6'-8" IN HEIGHT. PROJECTIONS INCLUDING PANIC HARDWARE, SHALL NOT REDUCE THE OPENING TO LESS THAN 2'-8" CLEAR WIDTH.

7. EXIT DOOR LEAF SHALL NOT EXCEED 4 FEET IN WIDTH AND SHALL SWING IN THE DIRECTION OF EXIT TRAVEL WHEN SERVING MORE THAN 50 PERSONS.

8. DOORS OTHER THAN EXIT DOORS TO BE A MINIMUM OF 2'-8" CLEAR OPENING WIDTH. DOORS ARE TO BE OPENABLE WITH A SINGLE EFFORT

9. DOOR HARDWARE TO BE LEVER-TYPE IN ACCORDANCE WITH CITY AND STATE ACCESSIBILITY REQUIREMENTS. (TITLE 24)

10. EVERY EXIT DOOR SHALL BE OPENABLE FROM THE INSIDE WITHOUT THE USE OF A KEY, TOOL. OR SPECIAL KNOWLEDGE OR EFFORT. SPECIAL LOCKING DEVICES SHALL BE AN APPROVED TYPE.

11. PANIC HARDWARE SHALL BE PROVIDE ON EXIT DOORS SERVING ROOMS, CORRIDORS, OR STAIRWAYS HANDLING A OCCUPANT OF 50 OR MORE PERSONS, FROM ANY GROUP A, E, OR I OCCUPANCY, AND 10 OR MORE PERSONS FOR MOTION PICTURE THEATERS.

12. ONLY PANIC HARDWARE APPROVED BY THE STATE FIRE MARSHALL SHALL BE INSTALLED. AIS

GENERAL NOTES

NOTES ON STRUCTURAL, ELECTRICAL, MECHANICAL AND PLUMBING PLANS ARE IN ADDITION TO THE FOLLOWING NOTES. IF CONFLICTING NOTES ARE FOUND, THE CONTRACTOR SHALL BRING SUCH DISCREPANCY TO THE ATTENTION OF THE ARCHITECT AND RELEVANT CONSULTANTS.

DIVISION 01 - GENERAL REQUIREMENTS

THE CONTRACTOR AND ANY TIER SUBCONTRACTOR SPECIFICALLY REPRESENTS AND WARRANTS TO THE OWNER THAT THE CONTRACT DOCUMENTS ARE SUFFICIENT TO PERMIT CONTRACTOR AND ITS SUBCONTRACTOR(S) TO ESTABLISH THE CONTRACT SUM, TO PREPARE ANY REQUIRED SHOP DRAWINGS, AND TO PERFORM THE WORK. THE CONTRACT DOCUMENTS ARE COMPLEMENTARY, AND WHAT IS REQUIRED BY EACH SHEET, PLAN, ELEVATION, SECTION, INTERIOR ELEVATION, DETAIL, CONSULTANTS' INFORMATION AND SPECIFICATION BOOK CONTENT SHALL BE BINDING TO EACH OTHER AND AS IF REQUIRED BY ALL. THE CONTRACTOR (AND ANY TIER SUBCONTRACTOR UPON EXECUTION OF ANY SUBCONTRACT) FURTHER ACKNOWLEDGES AND DECLARES THAT IT HAS VISITED AND EXAMINED THE SITE, EXAMINED ALL PHYSICAL, LEGAL AND OTHER CONDITIONS AFFECTING THE WORK AND IS FULLY FAMILIAR WITH ALL OF THE CONDITIONS THEREON AND THEREUNDER AFFECTING THE SAME. IN CONNECTION THEREWITH, CONTRACTOR (AND ANY TIER SUBCONTRACTOR UPON EXECUTION OF ANY SUBCONTRACT), SPECIFICALLY REPRESENTS AND WARRANTS TO OWNER THAT IT HAS, BY CAREFUL EXAMINATION, SATISFIED ITSELF AS TO AND SHALL NOT BE ENTITLED TO ANY INCREASE IN THE CONTRACT SUM OR CONTRACT TIME ON THE BASIS OF: (1) THE NATURE, LOCATION, AND CHARACTER OF THE PROJECT AND THE SITE, INCLUDING, WITHOUT LIMITATION, THE SURFACE CONDITIONS OF THE SITE AND ALL STRUCTURES AND OBSTRUCTIONS THEREON AND THEREUNDER, BOTH NATURAL AND MAN-MADE, ALL SURFACE AND SUBSURFACE WATER CONDITIONS OF THE SITE AND THE SURROUNDING AREA; (2) THE NATURE, LOCATION, AND CHARACTER OF THE GENERAL AREA IN WHICH THE PROJECT IS LOCATED, INCLUDING, WITHOUT LIMITATION, ITS CLIMATIC CONDITIONS, AVAILABLE LABOR SUPPLY AND LABOR COST, LOCATION OF STAGING AND LAYDOWN AREAS, PARKING, CONSTRUCTION ACTIVITY ADJACENT TO THE PROJECT, AND AVAILABLE EQUIPMENT SUPPLY AND EQUIPMENT COSTS; (3) THE QUALITY AND QUANTITY OF ALL MATERIALS, SUPPLIES, TOOLS, EQUIPMENT, LABOR, AND PROFESSIONAL SERVICES NECESSARY TO COMPLETE THE WORK IN THE MANNER AND WITHIN THE COST AND TIME FRAME REQUIRED BY THE CONTRACT DOCUMENTS; AND (4) ANY APPLICABLE FEDERAL, STATE AND LOCAL LAWS, ORDINANCES, RULES, REGULATIONS OR ORDERS, INCLUDING, WITHOUT LIMITATION, INSPECTION PROCEDURES AND TIMING.

1A. THE GENERAL NATURE OF THESE NOTES SHALL IN NO WAY DIMINISH THE CONTRACTOR AND SUB-CONTRACTORS FROM COMPLETING ALL WORK IN STRICT CONFORMANCE WITH ALL ASPECTS OF APPLICABLE BUILDING CODES AND WITH OTHER RULES, REGULATIONS AND ORDINANCES GOVERNING THE PLACE OF THE BUILDING. EACH SUB-CONTRACTOR SHALL BECOME FAMILIAR WITH ANY PART OF THE AFOREMENTIONED BUILDING CODES, RULES, ETC. THAT MAY AFFECT HIS WORK. IN THE EVENT THE FOLLOWING CONSTRUCTION DOCUMENTS HAVE NOT INCLUDED DETAILS PERTAINING TO SPECIFIC CONDITIONS, BY ACCEPTING THE CONTRACT, THE CONTRACTOR AND SUBCONTRACTORS AGREE TO INCORPORATE AND BUILD TO THE PREVAILING BUILDING CODES, REGULATIONS AND INDUSTRY STANDARDS.

1B. THE FINAL SPECIFICATIONS MANUAL SHALL BE INCLUDED AS PART OF THE GENERAL CONTRACTOR'S CONTRACT. BY ACCEPTING THIS CONSTRUCTION SET AND THE FINAL SPECIFICATIONS MANUAL, THE CONTRACTOR AGREES THAT ALL INFORMATION CONTAINED IN ONE PAGE SHALL BE INCORPORATED AND COORDINATED WITH INFORMATION CONTAINED ON EACH OF THE OTHER PAGES IN THE CONSTRUCTION SET AND FINAL SPECIFICATIONS MANUAL. THE GENERAL CONTRACTOR IS RESPONSIBLE FOR DISTRIBUTING ALL DOCUMENTS AND INFORMATION AVAILABLE TO ALL SUB-CONTRACTORS. IT IS THE RESPONSIBILITY OF THE GENERAL CONTRACTOR TO ENSURE THAT EACH SUB-CONTRACTOR UNDERSTANDS THE NEEDS OF THEIR TRADE WITH RESPECT TO OTHER TRADES GIVEN THE INTENT OF THE WORK AS DESCRIBED IN THE CONSTRUCTION SET AND FINAL SPECIFICATIONS MANUAL PRIOR TO SIGNING ANY CONTRACTUAL AGREEMENTS FOR THIS PROJECT.

1C. THE OWNER AND ARCHITECT SHALL BE NOTIFIED IF QUESTIONS, DISCREPANCIES OR CONFLICTS ARE FOUND DURING THE REVIEW PERIOD PRIOR TO CONSTRUCTION. ONCE UNDER CONSTRUCTION, SHOULD DISCREPANCIES ARISE BETWEEN INDIVIDUAL DRAWINGS AND/OR SPECIFICATIONS, THE CONTRACTOR SHALL PURCHASE AND/OR BUILD THE SOLUTION WHICH PROVIDES THE GREATEST DEGREE OF BUILDING INTEGRITY WITH REGARD TO SAFETY AND DURABILITY WITHOUT COST TO THE OWNER OR ARCHITECT.

1D. THE SUBCONTRACTORS MUST AGREE AS A CONDITION TO THEIR CONTRACT WITH THE GENERAL CONTRACTOR THAT THEY WILL FULLY INFORM THEMSELVES AND THEIR EMPLOYEES TO THE FULL EXTENT OF THE "CONTRACT DOCUMENTS (INCLUDING THE SPECIFICATION BOOK)" BEYOND THE INFORMATION DESCRIBING THEIR TRADE. AS AN EXAMPLE, THE FRAMER MUST REVIEW THE COMPLETE ARCHITECTURAL, MECHANICAL AND ELECTRICAL SECTION AND NOT ONLY THE STRUCTURAL SECTION. THE INTENT OF THIS REQUIREMENT IS TO PREVENT CRITICAL INFORMATION IN ALL SECTIONS TO BE RECOGNIZED AND MADE RESPONSIBLE BY AND TO ALL SUBCONTRACTORS. IF AT ANY TIME THE GENERAL CONTRACTOR IS MADE AWARE OR INFORMED OF ANY CONFLICTS BETWEEN THE SPECIFICATION BOOK AND THE CONSTRUCTION DOCUMENTS, IT IS THE OBLIGATION OF THE GENERAL CONTRACTOR TO INFORM THE ARCHITECT IN WRITING PRIOR TO ANY WORK PERFORMED.

2. SCOPE OF PERMIT

A. LIMIT OF AUTHORIZATION. THE ISSUANCE OF A PERMIT IS NOT AN APPROVAL OR AN AUTHORIZATION OF THE WORK SPECIFIED THEREIN. A PERMIT IS MERELY AN APPLICATION FOR INSPECTION, THE ISSUANCE OF WHICH ENTITLES THE PERMITTEE TO INSPECTION OF THE WORK, WHICH IS DESCRIBED THEREIN. PERMITS ISSUED UNDER THE REQUIREMENTS OF THIS CODE SHALL NOT RELIEVE THE OWNER OF RESPONSIBILITY FOR SECURING REQUIRED PERMITS FOR WORK TO BE DONE WHICH IS REGULATED BY ANY OTHER CODE, DEPARTMENT OR DIVISION OF THE CITY IN WHICH THE WORK IS PERFORMED.

B. VALIDITY OF OTHER LAWS. NEITHER ISSUANCE OF A PERMIT NOR THE APPROVAL OF THE BUILDING DEPARTMENT OF ANY DOCUMENT SHALL CONSTITUTE AN APPROVAL OF ANY VIOLATION OF ANY PROVISION OF THIS CODE OR OF ANY OTHER LAW OR ORDINANCE, AND A PERMIT OR OTHER DOCUMENT PURPORTING TO GIVE AUTHORITY TO VIOLATE ANY LAW SHALL NOT BE VALID WITH RESPECT THERETO.

3. ALL WORK, CONSTRUCTION AND MATERIALS SHALL COMPLY WITH ALL PROVISIONS OF THE CURRENT EDITION OF THE GOVERNING BUILDING CODE AND WITH OTHER RULES, REGULATIONS, AND ORDINANCES GOVERNING THE PLACE OF THE BUILDING. BUILDING CODE REQUIREMENTS TAKE PRECEDENCE OVER THE DRAWINGS AND IT SHALL BE THE RESPONSIBILITY OF ANYONE SUPPLYING LABOR, MATERIAL OR BOTH TO INSTALL HIS WORK IN CONFORMANCE WITH THE BUILDING CODE AND TO BRING TO THE ATTENTION OF THE ARCHITECT ANY DISCREPANCIES OR CONFLICTS BETWEEN THE REQUIREMENTS OF THE BUILDING CODE AND THE DRAWINGS. THE ABOVE SHALL APPLY TO ALL DIVISIONS.

4. DIMENSION & CONDITIONS AT THE JOB SITE SHALL BE VERIFIED BY THE CONTRACTOR(S). DISCREPANCIES IN THE DRAWINGS OR BETWEEN THE DRAWINGS AND ACTUAL FIELD CONDITIONS SHALL BE REPORTED TO THE ARCHITECT IN WRITING AND DRAWING FORM. CORRECTED DRAWINGS AND/OR INSTRUCTIONS SHALL BE ISSUED BY THE ARCHITECT PRIOR TO THE INSTALLATION OF ANY WORK.

5. SCAFFOLDING OR FALSEWORK: THE CONSTRUCTION AND DEMOLITION OF ANY BUILDING, STRUCTURE, SCAFFOLDING OR FALSE WORK MORE THAN 3 STORIES OR 36' IN HEIGHT, REQUIRES A PERMIT PRIOR TO THE ISSUANCE OF A BUILDING PERMIT.

6. CONSTRUCTION SAFETY:

A. ALL WORK SHALL CONFORM TO THE REQUIREMENTS OF LOCAL CODE.

B. PEDESTRIAN PROTECTION SHALL CONFORM TO THE REQUIREMENTS OF THE CALIFORNIA BUILDING CODE.

7. TEMPORARY TOILET: MAINTAIN SANITARY TOILET FACILITIES DURING CONSTRUCTION.

8. SITE COORDINATION: CONTRACTOR TO COORDINATE TRADES & EXISTING CONDITIONS WITH INSTALLATION & OPERATION FOR EACH SYSTEM.

9. STAIRS

A. ALL STAIRS SHALL CONFORM TO THE LOCAL BUILDING CODE.

B. PRIOR TO INSTALLATION OF ANY STAIR, THE CONTRACTOR SHALL VERIFY THE RISE, RUN, HEADROOM AND THE NUMBERS OF TREADS AND RISERS, AND SHALL NOTIFY THE ARCHITECT OF ANY DISCREPANCIES BETWEEN THE DRAWING AND THE ACTUAL FIELD CONDITIONS IN WRITING. SEE 'DIMENSIONS AND CONDITIONS' ABOVE.

10. GUARDRAILS: ALL UNENCLOSED FLOOR AND DOOR OPENINGS, OPEN AND GLAZED SIDES OF LANDINGS AND STAIRS,BALCONIES OR PORCHES WHICH ARE MORE THAN 30" ABOVE GRADE, AND ROOFS USED FOR OTHER THAN SERVICE OF THE BUILDING SHALL BE PROTECTED BY A GUARDRAIL WITH A MINIMUM HEIGHT OF 42". OPEN GUARDRAILS AND STAIR RAILINGS SHALL HAVE INTERMEDIATE RAILS OR AN ORNAMENTAL PATTERN SUCH THAT NO OBJECT 4" IN DIAMETER CAN PASS THROUGH. GUARD RAILS SHALL BE DESIGNED FOR 50. LB/FT. LATERAL LOAD AT EXIT FACILITIES SERVING AN OCCUPANT LOAD > 50, 20.LB/FT. LATERAL LOAD ELSEWHERE. SEE STRUCTURAL CALCULATIONS AND DETAILS.

11. BATHROOMS:

A. REFER TO SECTION 092900 – GYPSUM BOARD.

B. TOILET ROOM FLOORS SHALL HAVE A SMOOTH, HARD, NON-ABSORBENT, MATERIAL SUCH AS PORTLAND CEMENT, CONCRETE, CERAMIC TILE, OR OTHER APPROVED MATERIAL WHICH EXTENDS UPWARD ONTO THE WALLS AT LEAST 5". WALLS WITHIN WATER CLOSET COMPARTMENTS AND WALLS WITHIN 2 FT. OF THE FRONT AND SIDES OF URINALS SHALL BE SIMILARLY FINISHED TO A HEIGHT OF 4 FT. MINIMUM.

C. PROVIDE TWO-HOUR CONSTRUCTION BEHIND ALL TUBS PLACED ADJACENT TO DIVISION WALLS.

D. SHOWERS: WALLS IN ALL OCCUPANCIES, SHALL BE FINISHED AS SPECIFIED IN SUBSECTION (B) ABOVE TO A HEIGHT OF 70" MINIMUM ABOVE THE DRAIN INLET. SEE ALSO SECTION 092900 – GYPSUM BOARD.

E. GLAZING AT SHOWERS AND TUBS: GLAZING USED IN DOORS AND PANELS OF SHOWER AND BATHTUB ENCLOSURES SHALL BE FULLY TEMPERED / LAMINATED SAFETY GLASS OR APPROVED PLASTIC.

12. CEILING PROJECTIONS: THERE WILL BE NO PROJECTIONS, (LIGHT FIXTURES, ETC.) BELOW THE 7'-0" HIGH CEILINGS AT HALLWAYS, CLOSETS, KITCHENS, ETC. IF PROJECTIONS SUCH AS LIGHT FIXTURES ARE BELOW 7'-0" THEN THEY MUST PROJECT NO MORE THAN 4" FROM THE FINISH SURFACE.

13. TRASH ENCLOSURES: SHALL BE OF NON-COMBUSTIBLE CONSTRUCTION.

THE FOLLOWING SPECIFICATIONS SHALL APPLY UNLESS SHOWN OTHERWISE ON THE DRAWINGS:

14. OPENINGS:

A. FLOOR - CEILING OR ROOF - CEILING OPENINGS.

B. OPENINGS IN WALLS AND PARTITIONS SHALL BE PROTECTED. WHERE FIRE-RATED WALLS AND PARTITIONS REQUIRE PROTECTED OPENINGS, THE FOLLOWING PENETRATIONS INTO OR THROUGH SUCH CONSTRUCTION ARE PERMITTED:

1) COPPER OR FERROUS PIPES OR CONDUITS MAY PENETRATE WALLS OR PARTITIONS, IF FIRE STOPPED AS REQUIRED BY THE BUILDING CODE.

2) STEEL ELECTRICAL OUTLET BOXES NOT EXCEEDING 16 SQ. IN. IN AREA, PROVIDED THAT THE AREA OF SUCH OPENINGS DOES NOT AGGREGATE MORE THAN 100 SQ. IN. FOR ANY 100SQ.FT. OF WALL OR PARTITION AREA. OUTLET BOXES ON OPPOSITE SIDES OF WALLS OR PARTITIONS SHALL BE SEPARATED BY A HORIZONTAL DISTANCE OF 24". THE SPACE BETWEEN THE PENETRATING MATERIALS DESCRIBED IN ITEMS 1 & 2 MOVEMENT OF FLAMES AND GASES.

C. FLOORS: BUILDING PAPER SHALL BE LAID BETWEEN SUBFLOOR AND FINISHED FLOOR.

D. WALLS: 5/8" APPROVED TYPE "X" GYPSUM WALLBOARD FASTENED METAL STUDS PER BUILDING CODE; JOINTS CEMENTED, TAPED, SANDED, PRIMED AND PAINTED.

E. CEILINGS: ANY ASSEMBLY SPECIFIED PER LOCAL BUILDING CODE

16. PARTS OR PORTIONS OF STRUCTURES, NON-STRUCTURAL COMPONENTS AND THEIR ANCHORAGE TO THE MAIN STRUCTURAL SYSTEM SHALL BE DESIGNED FOR LATERAL FORCES.

DIVISION 02 – EXISTING CONDITIONS

1. EXISTING CONDITIONS: ALL DEBRIS, MISCELLANEOUS FORMWORK, OR OTHER REMNANT FROM PREVIOUS CONSTRUCTION OR DEMOLITION IS TO BE REMOVED FROM THE SITE PRIOR TO COMMENCING NEW WORK. THIS WORK IS DEEMED TO BE INCLUDED IN THE SCOPE OF WORK SET FORTH IN THESE DOCUMENTS.

DIVISION 6 – WOOD, PLASTICS, AND COMPOSITES

1. GENERAL: ALL REQUIREMENTS OF THE LOCAL BUILDING CODE SHALL BE MET.

2. FIRE STOPS FOR STUD WALLS AND PARTITIONS: ENCLOSED SPACES IN STUD WALLS, PARTITIONS AND FURRED WALLS SHALL BE FIRE-STOPPED AT THE TOP AND BOTTOM AND ALSO AT THE MID-POINT IN WALLS MORE THAN 10 FEET HIGH. THE DISTANCE BETWEEN FIRE-STOPS IN WALLS AND PARTITIONS SHALL NOT EXCEED 10 FEET MEASURED HORIZONTALLY OR VERTICALLY. TOP AND BOTTOM PLATES WHICH FILL ALL SPACES BETWEEN STUDS AND FURRING SHALL BE CONSIDERED FIRE-STOPS.

3. NOTCHING & BORING: AT EXTERIOR WALLS AND BEARING WALLS STUDS SHALL NOT BE NOTCHED MORE THEN 25 % WIDTH OF STUD: AT NON-BEARING PARTITIONS NOT MORE THAN 40% WIDTH OF STUDS. BORED HOLES: MAX DIAMETER 40% ANY STUD AND 60% NON-BEARING STUD PARTITIONS OR IN ANY WALL WHERE EACH BORED STUD IS DOUBLED, PROVIDED NOT MORE THEN 2 SUCH SUCCESSIVE DOUBLED STUDS ARE SO BORED: NO BORED HOLE CLOSER THEN 5 / 8" TO EDGE OF STUD. VERIFY WITH STRUCTURAL DRAWINGS. (SEE DIVISION 22, PLUMBING NOTES WITHIN THESE GENERAL NOTES)

4. PENETRATIONS: PENETRATIONS IN WALLS REQUIRING PROTECTED OPENINGS SHALL BE FIRE-STOPPED. FIRESTOPPING SHALL BE AN APPROVED MATERIAL SECURELY INSTALLED AND CAPABLE OF MAINTAINING ITS INTEGRITY WHEN SUBJECTED TO TEST TEMPERATURES PRESCRIBED IN THE CALIFORNIA BUILDING CODE FOR THE SPECIFIC WALL OR PARTITION.

5. PROVIDE DRAFT STOPS FOR FLOOR-CEILING ASSEMBLIES. DRAFT STOPS ARE REQUIRED ABOVE AND IN LINE WITH WALLS SEPARATING TENANT SPACES FROM EACH OTHER AND FROM OTHER USES.

DIVISION 7 - THERMAL & MOISTURE PROTECTION

1. ENERGY INSULATION

A. ALL NEW EXTERIOR WALLS SHALL BE INSULATED WITH BLANKET-TYPE MINERAL FIBER OR GLASS FIBER INSULATION CONFORMING TO FEDERAL SPECIFICATION HH-1-521E WITH THERMAL RESISTANCE (R) CONFORMING TO THE VALUES SPECIFIED IN THE TITLE 24 REPORTS BUT NOT LESS THAN 13. BATTS SHALL BE KRAFT PAPER FACED.

B. ALL ROOF INSULATION SHALL BE INSULATED WITH BATT OR RIGID INSULATION (SEE DWGS FOR LOCATION) WITH A THERMAL RESISTANCE (R) CONFORMING TO THE VALUES SPECIFIED IN THE TITLE 24 REPORTS BUT NOT LESS THAN 30.

C. ALL SLIDING GLASS DOORS AND WINDOWS SHALL BE CERTIFIED AND LABELED TO SHOW CONFORMANCE WITH CURRENT AIR INFILTRATION STANDARDS OF THE AMERICAN NATIONAL STANDARDS INSTITUTE (ANSI 134.1, ANSI 134.3, AND ANSI 134.4) WHEN TESTED IN ACCORDANCE WITH ASTM 283-7 WITH A PRESSURE DIFFERENTIAL OF 1.57 LB/SQ. FT.

D. REQUIRED TINTING AND GLAZING SHALL BE PERMANENTLY TINTED OR PERMANENTLY SURFACE-COATED BY THE MANUFACTURER OF THE GLAZING MATERIAL.

E. ALL RETURN PIPING AND ALL CONTINUOUSLY CIRCULATING DOMESTIC OR HEATING HOT WATER PIPING SHALL BE INSULATED AS REQUIRED BY THE PLUMBING DIVISION.

F. A CERTIFICATE OF COMPLIANCE SIGNED BY THE INSULATION CONTRACTOR AND GENERAL CONTRACTOR SHALL BE PROMINENTLY POSTED ON THE SITE. BLANK CERTIFICATES CAN BE OBTAINED AT ALL BUILDING DEPARTMENT OFFICES.

F. ALL GLAZING AND INSULATION SHALL CONFORM TO THE STATE INSULATION STANDARDS.

2. BELOW GRADE WATER-PROOFING: REQUIRED AT ALL WALLS BELOW GRADE THAT ENCLOSE USABLE SPACE AND BASEMENT FLOOR SLAB.

3. ROOF DRAINAGE: MINIMUM ROOF SLOPE SHALL BE 1/4" VERTICAL FOR EVERY 1'- 0" HORIZONTAL. PER SECTION 1101.11.2.2 OF THE CALIFORNIA PLUMBING CODE, THE MAXIMUM HEIGHT OF THE ROOF DRAINS SHALL BE A HEIGHT TO PREVENT THE DEPTH OF PONDING WATER FROM EXCEEDING THAT FOR WHICH THE ROOF WAS DESIGN AS DETERMINED BY SECTION 1101.11.1. IF SECONDARY DRAINS ARE NOT PRESENT ON THE DRAWINGS, CONTRACTOR SHALL NOTIFY THE ARCHITECT, STRUCTURAL ENGINEER AND PLUMBING ENGINEER PRIOR TO COMMENCING RELATED PLUMBING WORK.

DIVISION 8 - OPENINGS

1. GLAZING:

A. GLASS THICKNESS, STRENGTH, MATERIALS AND METHOD OF INSTALLATION SHALL CONFORM WITH REQUIREMENTS OF LOCAL BUILDING CODES.

B. GLASS AND GLAZING IN LOCATIONS WHICH MAY BE SUBJECT TO HUMAN IMPACT SUCH AS FRAMELESS GLASS DOORS, GLASS PANELS, GLASS EXIT AND ENTRANCE DOORS, SLIDING GLASS DOORS, SHOWER DOORS, TUB ENCLOSURES, AND STORM DOORS SHALL MEET THE REQUIREMENTS SET FORTH IN THE LOCAL BUILDING CODE.

C. GLASS DOORS, ADJACENT PANELS AND ALL GLAZED OPENINGS WITHIN 18" OF THE ADJACENT FLOOR, WHOSE LEAST DIMENSION IS GREATER THAN 18", SHALL BE OF GLASS APPROVED FOR IMPACT HAZARD.

D. ALL GLASS MUST COMPLY WITH U.S. CONSUMER SAFETY PROTECTION COMMISSION REQUIREMENTS.

2. SMOKE AND DRAFT CONTROL: DOORS REQUIRED TO HAVE SMOKE AND DRAFT CONTROL ASSEMBLIES SHALL BE PROVIDED WITH A GASKET SO INSTALLED AS TO PROVIDE A SEAL WHERE THE DOOR MEETS THE STOP ON BOTH SIDES AND ACROSS THE TOP.

3. SECURITY PROVISIONS: ALL OPENINGS NOTED WITH SYMBOL ARE SECURITY OPENINGS AND THE FOLLOWING NOTES SHALL APPLY: GLAZED OPENINGS SHALL CONFORM TO THE REQUIREMENTS OF SECURITY PROVISION OF LOCAL BUILDING CODE. ENTRY DOORS SHALL BE ARRANGED SO THAT THE OCCUPANT HAS A VIEW OF THE AREA IMMEDIATELY OUTSIDE THE DOOR. SUCH A VIEW MAY BE PROVIDED WITH A DOOR VIEWER.

4. SWINGING DOORS:

A. DOOR STOPS OF IN-SWINGING DOORS SEPARATING DWELLING UNITS FROM PUBLIC AREAS SHALL BE OF ONE- PIECE CONSTRUCTION WITH THE JAMB OR JOINED BY A RABBET JOINT TO THE JAMB.

B. ALL PIN-TYPES HINGES WHICH ARE ACCESSIBLE FROM OUTSIDE THE SECURED AREA WHEN THE DOOR IS CLOSED SHALL HAVE NON-REMOVABLE HINGE PINS. IN ADDITION THEY SHALL HAVE MINIMUM 1 / 4" DIAMETER STEEL JAMB STUD WITH 1 / 4" MINIMUM PROJECTION UNLESS THE HINGES ARE SHAPED TO PREVENT REMOVAL OF THE DOOR IF THE HINGE PINS ARE REMOVED.

C. THE STRIKE PLATE FOR LATCHES AND THE HOLDING DEVICE FOR PROJECTING DEADBOLTS IN WOOD CONSTRUCTION SHALL BE SECURED TO THE JAMB AND THE WALL FRAMING WITH SCREWS OF NOT LESS THAN TWO 1-1/2" LENGTH.

D. DEADBOLTS SHALL CONTAIN HARDENED INSERTS.

E. STRAIGHT DEADBOLTS SHALL HAVE A MINIMUM THROW OF 1" AND EMBEDMENT OF NOT LESS THAN 5/8" INTO THE HOLDING DEVICE RECEIVING THE PROJECTED BOLT.

F. A HOOK-SHAPED OR AN EXPANDING-LUG DEADBOLT SHALL HAVE A MINIMUM THROW OF 3 /4".

G. GLASS DOORS SHALL HAVE TEMPERED/ LAMINATED GLAZING FULLY COMPLYING WITH THE LOCAL BUILDING CODE.

H. DOORS SHALL BE PROVIDED WITH A KEY-OPERATED LOCKS ON THE EXTERIOR AND SHALL BE OPENABLE FROM THE INTERIOR WITHOUT A KEY, SPECIAL KNOWLEDGE OR SPECIAL EFFORT.

I. GLAZED OPENINGS WITHIN 40" OF THE LOCKING DEVICE OF THE DOOR OR WINDOW SHALL BE FULLY TEMPERED GLASS OR APPROVED BURGLARY RESISTANT MATERIAL, OR SHALL BE PROTECTED BY METAL BARS, SCREENS OR GRILLS HAVING A PATTERN SUCH THAT THE MAX. DIMENSION OF ANY OPENING DOES NOT EXCEED 2"

J. DOOR LOCKING DEVICES SHALL BE A TYPE THAT WILL BE READILY DISTINGUISHABLE AS LOCKED. EXIT DOORS USED IN PAIRS SHALL HAVE APPROVED AUTOMATIC FLUSH BOLTS.

K. ONE-HOUR RATED DOOR ASSEMBLIES SHALL HAVE NON-COMBUSTIBLE STILES EXTENDING THE FULL WIDTH OF THE DOOR FRAME. THE ASSEMBLY SHALL BE CAPABLE OF WITHSTANDING A MAXIMUM 450 F TEMPERATURE RISE ABOVE AMBIENT TEMPERATURE AFTER 30 MINUTES OF FIRE TEST.

L. THE DOOR KNOB AND THE THUMB TURN WHICH OPERATES THE DEADBOLT SHALL NOT BE SEPARATED BY MORE THAN 8".

5. CYLINDER GUARDS: SHALL BE INSTALLED ON ALL CYLINDER LOCKS WHENEVER THE CYLINDER PROJECTS BEYOND THE FACE OF THE DOOR OR IS OTHERWISE ACCESSIBLE TO GRIPPING TOOLS.

6. SCREENS, BARRICADES, AND FENCES: SHALL BE CONSTRUCTED OF MATERIAL WHICH PRECLUDE HUMAN CLIMBING AND SHALL BE PROVIDED AT EVERY PORTION OF EVERY ROOF, BALCONY, OR SIMILAR SURFACE WHICH IS WITHIN 8' OF A UTILITY POLE OR SIMILAR STRUCTURE.

7. SLIDING GLASS DOORS/ WINDOWS:

A. SHALL BE EQUIPPED WITH LOCKING DEVICES AND SHALL BE SO CONSTRUCTED AND INSTALLED THAT THEY MAY REMAIN INTACT AND ENGAGED WHEN SUBJECTED TO THE TESTS SPECIFIED IN THE LOCAL BUILDING CODE.

B. SHALL BE PROVIDED WITH A DEVICE IN THE UPPER CHANNEL OF THE MOVING PANEL TO PROHIBIT RAISING AND REMOVING THE MOVING PANEL FROM ITS TRACK, IN THE CLOSED OR PARTIALLY OPEN POSITION.

8. METAL OR WOODEN OVERHEAD OR SLIDING DOORS SHALL BE SECURED WITH A CYLINDER LOCK, PADLOCK WITH A MIN. 9/32" DIAMETER HARDENED STEEL SHACKLE AND BOLTED, HARDENED STEEL HASPS, METAL SLIDE BOARD, BOLT OR EQUIVALENT DEVICE UNLESS SECURED ELECTRICALLY OPERATED.

9. LOUVERED WINDOWS: SHALL BE PROTECTED BY METAL BARS OR GRILLS WITH OPENINGS THAT HAVE AT LEAST ONE DIMENSION OF 6" OR LESS, WHICH ARE CONSTRUCTED TO PRECLUDE HUMAN ENTRY. LOCKING DEVICES SHALL BE LOCATED AT THE INSIDE OF THE ADJACENT ROOM AT LEAST 24" FROM THE OPENING.

10. OTHER OPENABLE WINDOWS SHALL BE PROVIDED WITH SUBSTANTIAL LOCKING DEVICES.

11. ACRYLIC/ PLASTIC SKYLIGHTS: SYSTEMS SHALL CONFORM TO THE UNIFORM BUILDING CODE SECTION 2603.7.1

12. PROVIDE 32" WIDE DOORS TO ALL INTERIOR ACCESSIBLE ROOMS (6304.1)

DIVISION 9 - FINISHES

1. INTERIOR FINISHES SHALL COMPLY WITH THE FLAME SPREAD AND SMOKE DENSITY REQUIREMENTS OF THE LOCAL BUILDING CODE. SEE FIRE GENERAL NOTES.

2. PLASTERED SURFACES: ON WALLS, CEILINGS, AND ROOF SOFFITS EXPOSED TO WEATHER SHALL HAVE EXTERIOR LATH AND PLASTER.

3. LATH AND WALLBOARD: IN-PLACE INSPECTION IS REQUIRED FOR ALL INTERIOR AND EXTERIOR LATH AND/OR WALLBOARD BEFORE ANY PLASTERING IS APPLIED OR ANY JOINTS AND FASTENERS HAVE BEEN TAPED AND FINISHED.

4. DRYWALL:

A. DRYWALL SHALL CONFORM TO LOCAL BUILDING CODES.

B. DRYWALL LOCATED BEHIND REQUIRED NON-ABSORBENT SURFACES SHALL BE WATER-RESISTANT.

C. ALL DRYWALL SURFACES SHALL BE TAPED, PATCHED, SANDED, PRIMED, AND PAINTED (COLOR BY ARCHITECT) UNLESS NOTED OTHERWISE.

D. PROVIDE CORNER BEAD AND J-MOLD AT ALL EXPOSED DRYWALL EDGES AND TERMINATIONS.

DIVISION 13 - SPECIAL CONSTRUCTION

1. SOUND TRANSMISSION CONTROL: REFER TO STATE NOISE INSULATION STANDARDS FOR SOUND RATED PARTITIONS AND IMPACTED RATED FLOOR/CEILING ASSEMBLIES.

A. WALLS: SHALL HAVE AIRBORNE SOUND CONTROL WITH MINIMUM STC RATING OF 50.

B. FLOORS/CEILINGS: SHALL HAVE AIRBORNE SOUND CONTROL WITH MINIMUM STC RATING OF 50 AND IMPACT SOUND CONTROL WITH MINIMUM LLC RATING OF 50.

2. ADDITIONAL REQUIREMENTS:

A. AN APPROVED PERMANENT AND RESILIENT ACOUSTICAL SEALANT SHALL BE PROVIDED ALONG THE JOINT BETWEEN THE FLOOR AND THE SEPARATION WALLS.

B. ALL PENETRATIONS INTO SOUND RATED PARTITIONS OR FLOOR/CEILING ASSEMBLIES WILL BE SEALED WITH APPROVED RESILIENT SEALANT.

C. ALL RIGID CONDUIT, DUCTS, PLUMBING PIPES AND APPLIANCE VENTS LOCATED IN SOUND ASSEMBLIES WILL BE ISOLATED FROM THE BUILDING CONSTRUCTION BY MEANS OF RESILIENT SLEEVES, MOUNTS OR MINIMUM 1/4" THICK APPROVED RESILIENT MATERIAL. (EXCEPTION: GAS PIPING NEED NOT BE ISOLATED).

D. METAL VENTILATING AND CONDITIONED AIR DUCTS LOCATED IN SOUND ASSEMBLIES SHALL BE LINED. (EXCEPTION: DUCTS SERVING ONLY KITCHEN COOKING FACILITIES, AND BATHROOMS NEED NOT BE LINED.)

E. WALL MOUNTED LAVATORIES AND TOILETS ARE NOT PERMITTED ON SOUND RATED PARTITIONS.

F. COMBUSTION AIR, KITCHEN AND BATHROOM EXHAUST DUCTS WITHIN SOUND-SEPARATION ASSEMBLIES SHALL BE WRAPPED WITH APPROVED INSULATION.

3. ELECTRICAL REQUIREMENTS:

A. OUTLET BOXES MAY BE INSTALLED IN THE SOUND RATED WALLS AND CEILINGS AS FOLLOWS:

1) BOXES WHICH PENETRATE THE WALL IN ONE AREA OR OCCUPANCY SHALL NOT BE INSTALLED IN THE SAME SPACE BETWEEN STUDS CONTAINING A BOX WHICH PENETRATES INTO ANOTHER AREA OR OCCUPANCY.

2) THERE SHALL BE ONE SOLID STUD BETWEEN OUTLET BOXES AND MINIMUM 24" SEPARATION FROM CENTER TO CENTER.

3) OUTLET BOXES SHALL HAVE A DEPTH OF NOT MORE THEN 1-1/2", SO AS TO ALLOW THE REQUIRED 2" UNCOMPRESSED INSULATION TO BE INSTALLED IN A STANDARD 2" X 4" WALL. ON WALLS OF DEEPER DIMENSIONS, BOXES OF GREATER DEPTH MAY BE USED.

4) BACK AND SIDES OF BOXES SHALL BE SEALED WITH 1/8" RESILIENT SEALANT AND BACKED WITH 2" MINIMUM MINERAL FIBER INSULATION (TV, TELEPHONE AND INTERCOM OUTLETS MUST BE INSTALLED IN BOXES ACCORDINGLY).

5) CONDUITS OR RACEWAYS (STUBOUTS) MAY PENETRATE THE SOUND RATED WALLS OR CEILINGS, PROVIDED THE CONDUIT IS COVERED AT THE PENETRATION POINT WITH A PERMANENTLY RESILIENT SEALANT.

6) THE REQUIREMENTS FOR OUTLET BOXES INSTALLED FOR TELEVISIONS, TELEPHONES AND THERMOSTATS (ELECTRICAL AND PNEUMATIC) SHALL BE THE SAME AS FOR RECEPTACLES OR SWITCHES. PLASTER RINGS, OPEN BACK BOXES, OR MOUNTING PLATES SHALL NOT BE PERMITTED.

7) WHERE METALLIC RACEWAYS MATERIAL (RIGID METAL CONDUIT, STEEL TUBE) IS INSTALLED IN SOUND RATED FLOOR JOIST WITH A RESILIENT MATERIAL AT THE POINTS OF SUPPORT. AT THE POINT WHERE THE RACEWAYS PASS THROUGH HOLES OR NOTCHES, CARE SHOULD BE TAKEN TO INSURE THAT THE RACEWAY DOES NOT TOUCH THE SURFACE OF THE JOISTS. THE RESILIENT MATERIAL USED MAY BE RUBBER, CARPET PADDING, OR OTHER APPROVED MATERIAL.

8) WHEN RIGID METALLIC RACEWAY IS INSTALLED IN THE FLOOR-CEILING SPACES, THE SPACE SHALL HAVE A MINIMUM OF 2" OF MINERAL INSULATION BELOW. CARE SHOULD BE TAKEN DURING INSTALLATION OF THE RACEWAY TO ALLOW FOR THIS 2" OF NONCOMPR

FIRE GENERAL NOTES:

OPENINGS
1. FIRE BLOCKING MUST BE PROVIDED IN ACCORDANCE WITH SECTION 708.2.1 IN OPENINGS AROUND VENTS, PIPES, DUCTS, CHIMNEYS, FIREPLACES AND SIMILAR OPENINGS WHICH AFFORD A PASSAGE FOR FIRE AT CEILING AND FLOOR LEVELS, WITH NONCOMBUSTIBLE MATERIALS.

ADDITIONAL NOTES: CONSTRUCTION PHASE
1. GRADING AND OTHER CONSTRUCTION ACTIVITIES SHALL BE LIMITED TO THE HOURS OF 8:00 AM TO 6:00 PM, MONDAY THROUGH FRIDAY, AND SHALL BE LIMITED TO INTERIOR CONSTRUCTION DURING THE SAME HOURS ON SATURDAY. NO CONSTRUCTION ACTIVITY SHALL BE PERMITTED ON SUNDAYS AND CITY OR NATIONAL HOLIDAYS. THE USE OF HEAVY EQUIPMENT SHALL BE RESTRICTED TO THE HOURS OF 8:00 AM TO 6:00 PM MONDAY THROUGH FRIDAY. TRUCKS AND OTHER HEAVY EQUIPMENT AND VEHICLES SHALL NOT ARRIVE BEFORE 8:00 AM. WORKERS FOR THE PROJECT SHALL NOT ARRIVE AT THE SITE PRIOR TO 7:45 AM ON ANY WORKING DAY. ALL CONSTRUCTION EQUIPMENT AND MATERIALS SHALL BE STORED ON SITE.

DESIGN BUILD NOTES:

THE CONTRACTOR SHALL PROVIDE PROFESSIONAL DESIGN-BUILD SERVICES FOR ITEMS INDICATED ON THE CONTRACT DOCUMENTS. THE CONTRACTOR SHALL CAUSE SUCH SERVICES OR CERTIFICATIONS TO BE PROVIDED BY A PROPERLY LICENSED DESIGN PROFESSIONAL, WHOSE SIGNATURE AND SEAL SHALL APPEAR ON ALL DRAWINGS, CALCULATIONS, SPECIFICATIONS, CERTIFICATIONS, SHOP DRAWINGS AND OTHER SUBMITTALS PREPARED BY SUCH PROFESSIONAL. DRAWINGS AND OTHER SUBMITTALS RELATED TO THE WORK DESIGNED OR CERTIFIED BY SUCH PROFESSIONAL, IF PREPARED BY OTHERS, SHALL BEAR SUCH PROFESSIONAL'S WRITTEN APPROVAL WHEN SUBMITTED TO THE ARCHITECT. THE OWNER AND THE ARCHITECT SHALL BE ENTITLED TO RELY UPON THE ADEQUACY, ACCURACY AND COMPLETENESS OF THE SERVICES, CERTIFICATIONS AND APPROVALS PERFORMED OR PROVIDED BY SUCH DESIGN PROFESSIONALS, PROVIDED THE OWNER AND ARCHITECT HAVE SPECIFIED TO THE CONTRACTOR ALL PERFORMANCE AND DESIGN CRITERIA THAT SUCH SERVICES MUST SATISFY. THE ARCHITECT WILL REVIEW, APPROVE OR TAKE OTHER APPROPRIATE ACTION ON SUBMITTALS ONLY FOR THE LIMITED PURPOSE OF CHECKING FOR CONFORMANCE WITH INFORMATION GIVEN AND THE DESIGN CONCEPT EXPRESSED IN THE CONTRACT DOCUMENTS.

FIREPLACES & FIRE FEATURES:
THE FOLLOWING NOTES APPLY TO ALL FIREPLACES AND FIRE FEATURES INDICATED ON PLANS AS DESIGN-BUILD.

ALL UNLISTED GAS FIRE APPLIANCES, FIREPLACES AND FIRE FEATURES SHALL BE TESTED, CERTIFIED AND FIELD INSPECTED BY A THIRD PARTY ORGANIZATION ACCREDITED BY ANSI (AMERICAN NATIONAL STANDARDS INSTITUTE). ONE SUCH RECOMMENDED ORGANIZATION IS CSA INTERNATIONAL WHICH IS RECOGNIZED BY THE CITY OF LOS ANGELES BUILDING AND FIRE OFFICIALS. MORE INFORMATION ON CSA INTERNATIONAL CAN BE FOUND AT WWW.CSA-INTERNATIONAL.ORG

THE CONTRACTOR SHALL PRODUCE DESIGN AND CONSTRUCTION DOCUMENTS FOR EVALUATION BY THE THIRD PARTY ORGANIZATION FOR GENERAL COMPLIANCE WITH THE NATIONALLY RECOGNIZED STANDARDS INCLUDING:
- ANSI Z21.50 STANDARD FOR DECORATIVE GAS APPLIANCES
- NFPA 54 NATIONAL FUEL GAS CODE
- THE INTERNATIONAL FUEL GAS CODE
- THE INTERNATIONAL PLUMBING CODE
- THE INTERNATIONAL MECHANICAL CODE

THE THIRD PARTY ORGANIZATION SHALL ALSO BE HIRED TO CONDUCT A PERFORMANCE TESTING PROGRAM UPON COMPLETION OF CONSTRUCTION AND INSTALLATION OF THE FIREPLACES AND FIRE FEATURES. PERFORMANCE TESTING SHALL INCLUDE, BUT NOT BE LIMITED TO, THE FOLLOWING EVALUATIONS:
- PRESSURE/LEAK TESTING OF GAS PIPING SYSTEM ADJACENT TO AND WITHIN THE APPLIANCE TO VERIFY GAS TIGHTNESS
- PILOT AND MAIN BURNER OPERATING CHARACTERISTICS TESTS.
- TEMPERATURE TESTING TO VERIFY THE APPLIANCE'S SURROUNDINGS ARE NOT EXPOSED TO EXCESSIVE TEMPERATURE RISES DUE TO THEIR PROXIMITY TO THE APPLIANCE OR ITS OPEN FLAMES.
- A COMBUSTION EVALUATION OF THE FLUE PRODUCTS FOR THEIR CO (CARBON MONOXIDE) LEVELS AND THEIR EFFECTS ON THE SURROUNDING OXYGEN LEVELS.
- PERFORMANCE EVALUATION WITH RESPECT TO WIND AND RAIN.
- FUNCTIONAL TEST OF ALL SAFETY RELATED CONTROLS.

THE THIRD PARTY ORGANIZATION SHALL ALSO EVALUATE SUPPORTING DOCUMENTS WHICH SHOULD ACCOMPANY THE APPLIANCE FOR ACCURACY AND ADEQUACY. SUPPORT DOCUMENTATION PROVIDE BY THE CONTRACTOR SHALL INCLUDE AT A MINIMUM:
- AS-BUILT DRAWINGS WHICH REFLECT THE ACTUAL APPLIANCE AND ITS INSTALLATION
- INSTRUCTIONS FOR PLACING THE APPLIANCE IN OPERATION
- INSTRUCTIONS FOR SHUTTING THE APPLIANCE DOWN.
- A DETAIL REPLACEMENT PARTS LIST.

UPON COMPLETION OF THE ABOVE ITEMS, THE THIRD PARTY ORGANIZATION SHALL PREPARE A FORMAL FIELD EVALUATION REPORT AND APPLY FOR A FIELD EVALUATION LABEL RECOMMENDING ACCEPTANCE OF THE APPLIANCE BY THE CITY OF LOS ANGELES AND OTHER LOCAL AUTHORITIES.

THE THIRD PARTY ORGANIZATION SHALL PROVIDE LABELS FOR APPROVAL BY LOCAL AUTHORITIES ONLY IF THE FOLLOWING CONDITIONS AGREED TO BY THE OWNER & GENERAL CONTRACTOR:
- THE EQUIPMENT SHALL BE USED IN A MANNER CONSISTENT WITH THE MANUFACTURER'S DESIGN AND INSTRUCTIONS. INSTRUCTIONS SHALL BE PROVIDED IN AN ACCESSIBLE LOCATION FOR MAINTENANCE AND REFERENCE.
- THE AREA SURROUNDING THE EQUIPMENT WILL BE KEPT FREE AND CLEAR FROM COMBUSTIBLE MATERIAL. ADEQUATE CLEARANCES WILL BE MAINTAINED FOR PROPER SAFETY, OPERATION AND SERVICING.
- AN INSTALLATION INSTRUCTION WILL BE LEFT TO THE HOMEOWNER TO FOLLOW INSTRUCTIONS TO MAINTAIN THE UPKEEP OF THE FIREPLACES. THE FINAL RESPONSIBILITY FOR ESTABLISHING A MAINTENANCE PROGRAM WILL REST WITH THE END USER.
- AS PARTS DETERIORATE OR CEASE TO FUNCTION PROPERLY, THEY WILL BE REPLACED OR REPAIRED. NO CHANGES TO THE DESIGN, CONSTRUCTION OR USE SHALL BE MADE WITHOUT THE WRITTEN ACKNOWLEDGEMENT AND APPROVAL OF THE SAME THIRD PARTY ORGANIZATION. ADDITIONAL TESTING MAY BE REQUIRED TO DETERMINE ACCEPTABILITY OF ANY CHANGES MADE.

CODE COMPLIANCE GENERAL NOTES:

A. THE CONSTRUCTION SHALL NOT RESTRICT A FIVE-FOOT CLEAR AND UNOBSTRUCTED ACCESS TO ANY WATER OR POWER DISTRIBUTION FACILITIES (POWER POLES, PULL-BOXES, TRANSFORMERS, VAULTS, PUMPS, VALVES, METERS, APPURTENANES, ETC.) OR TO THE LOCATION OF THE HOOK-UP. THE CONSTRUCTION SHALL NOT BE WITHIN TEN FEET OF ANY POWER LINES-WHETHER OR NOT THE LINES ARE LOCATED ON THE PROPERTY. FAILURE TO COMPLY MAY CAUSE CONSTRUCTION DELAYS AND/OR ADDITIONAL EXPENSES.
B. AN APPROVED SEISMIC GAS SHUTOFF VALVE WILL BE INSTALLED ON THE FUEL GAS LINE ON THE DOWN STREAM SIDE OF THE UTILITY METER AND BE RIGIDLY CONNECTED TO THE EXTERIOR OF THE BUILDING OR STRUCTURE CONTAINING THE FUEL GAS PIPING." (PER ORDINANCE 170,158) (SEPARATE PLUMBING PERMIT IS REQUIRED).
C. PLUMBING FIXTURES ARE REQUIRED TO BE CONNECTED TO A SANITARY SEWER OR TO AN APPROVED SEWAGE DISPOSAL SYSTEM (R306.3).
D. KITCHEN SINKS, LAVATORIES, BATHTUBS, SHOWERS, BIDETS, LAUNDRY TUBS AND WASHING MACHINE OUTLETS SHALL BE PROVIDED WITH HOT AND COLD WATER AND CONNECTED TO AN APPROVED WATER SUPPLY (R306.4).
E. BATHTUB AND SHOWER FLOORS, WALLS ABOVE BATHTUBS WITH A SHOWERHEAD, AND SHOWER COMPARTMENTS SHALL BE FINISHED WITH A NONABSORBENT SURFACE. SUCH WALL SURFACES SHALL EXTEND TO A HEIGHT OF NOT LESS THAN 6 FEET ABOVE THE FLOOR (R307.2).
F. PROVIDE ULTRA LOW FLUSH WATER CLOSETS FOR ALL NEW CONSTRUCTION. EXISTING SHOWER HEADS AND TOILETS MUST BE ADAPTED FOR LOW WATER CONSUMPTION.
G. PROVIDE 70 INCH HIGH NON-ABSORBENT WALL ADJACENT TO SHOWER AND APPROVED SHATTER-RESISTANT MATERIALS FOR SHOWER ENCLOSURE." (R308)
H. UNIT SKYLIGHTS SHALL BE LABELED BY A LA CITY APPROVED LABELING AGENCY. SUCH LABEL SHALL STATE THE APPROVED LABELING AGENCY NAME, PRODUCT DESIGNATION AND PERFORMANCE GRADE RATING (RESEARCH REPORT NOT REQUIRED)(R308.6.9).
I. WATER HEATER MUST BE STRAPPED TO WALL (SEC. 507.3, LAPC)
J. AUTOMATIC GARAGE DOOR OPENERS, IF PROVIDED, SHALL BE LISTED IN ACCORDANCE WITH UL 325.
K. PROVIDE AN ALARM FOR DOORS TO THE DWELLING THAT FORM PART OF THE POOL ENCLOSURE. THE ALARM SHALL ACTIVATE WITHIN 7 SECONDS AND SOUND CONTINUOUSLY FOR A MIN. OF 30 SECONDS WHEN THE DOOR IS OPENED. IT SHALL AUTOMATICALLY RESET AND BE EQUIPPED WITH A MANUAL MEANS TO DEACTIVATE (FOR 15 SECS. MAX.) FOR A SINGLE OPENING. THE DEACTIVATION SWITCH SHALL BE AT LEAST 54" ABOVE THE FLOOR. (6109 OF LABC) (3109.4.1.8)
L. FOR EXISTING POOL ON SITE, PROVIDE ANTI-ENTRAPMENT COVER MEETING THE CURRENT ASTM OR ASME FOR THE SUCTION OUTLETS OF THE SWIMMING POOL, TODDLER POOL AND SPA FOR SINGLE FAMILY DWELLINGS PER ASSEMBLY BILL (AB) NO. 2977. (3162B)
M. SMOKE DETECTORS SHALL BE PROVIDED FOR ALL DWELLING UNITS INTENDED FOR HUMAN OCCUPANCY, UPON THE OWNER'S APPLICATION FOR A PERMIT FOR ALTERATIONS, REPAIRS, OR ADDITIONS, EXCEEDING ONE THOUSAND DOLLARS ($1,000). (R314.6.2)
N. WHERE A PERMIT IS REQUIRED FOR ALTERATIONS, REPAIRS OR ADDITIONS EXCEEDING ONE THOUSAND DOLLARS ($1,000), EXISTING DWELLINGS OR SLEEPING UNITS THAT HAVE ATTACHED GARAGES OR FUEL-BURNING APPLIANCES SHALL BE PROVIDED WITH A CARBON MONOXIDE ALARM IN ACCORDANCE WITH SECTION R315.1 CARBON MONOXIDE ALARMS SHALL ONLY BE REQUIRED IN THE SPECIFIC DWELLING UNIT OR SLEEPING UNIT FOR WHICH THE PERMIT WAS OBTAINED. (R315.2)
O. EVERY SPACE INTENDED FOR HUMAN OCCUPANCY SHALL BE PROVIDED WITH NATURAL LIGHT BY MEANS OF EXTERIOR GLAZED OPENINGS IN ACCORDANCE WITH SECTION R303.1 OR SHALL BE PROVIDED WITH ARTIFICIAL LIGHT THAT IS ADEQUATE TO PROVIDE AN AVERAGE ILLUMINATION OF 10 FOOT-CANDLES OVER THE AREA O OF THE ROOM AT A HEIGHT OF 30 INCHES ABOVE THE FLOOR LEVEL. (R303.1)
P. A COPY OF THE EVALUATION REPORT AND/OR CONDITIONS OF LISTING SHALL BE MADE AVAILABLE AT THE JOB SITE

GARAGE/CARPORTS

1. DOORS BETWEEN GARAGE AND THE DWELLING UNIT SHALL BE SELF-CLOSING AND SELF-LATCHING, SOLID WOOD OR SOLID OR HONEYCOMB CORE STEEL NOT LESS THAN 1 3/8 INCHES THICK, OR HAVE A MINIMUM FIRE PROTECTION RATING OF 20 MINUTES. (302.5.1)
2. THE GARAGE SHALL BE SEPARATED FROM THE DWELLING AND ITS ATTIC AREA IN ACCORDANCE WITH TABLE R302.6 (R302.6).
3. DUCTS PENETRATING THE WALLS OR CEILINGS SEPARATING THE DWELLING FROM THE GARAGE SHALL BE CONSTRUCTED OF A MINIMUM NO. 26 GAGE SHEET STEEL OR OTHER APPROVED MATERIAL AND THERE SHALL BE NO OPENINGS FROM THE DUCTS INTO THE GARAGE (R302.5.2).
4. OTHER PENETRATIONS OF GARAGE/DWELLINGS CEILINGS AND WALLS SHALL BE PROTECTED AS REQUIRED BY SECTION R302.11, ITEM 4 (R302.2.3)
5. GARAGE FLOOR SURFACES SHALL BE OF AN APPROVED NONCOMBUSTIBLE MATERIAL, AND THE AREA USED TO PARK VEHICLES SHALL BE SLOPED TO A DRAIN OR TOWARD THE MAIN VEHICLE ENTRY (R309.1).

BUILDING ENVELOPE:

1. BUILDINGS SHALL HAVE APPROVED ADDRESS NUMBERS, BUILDING NUMBERS OR APPROVED BUILDING IDENTIFICATION PLACED IN A POSITION THAT IS PLAINLY LEGIBLE AND VISIBLE FROM THE STREET OR ROAD FRONTING THE PROPERTY. THESE NUMBERS SHALL CONTRAST WITH THEIR BACKGROUND. ADDRESS NUMBERS SHALL BE ARABIC NUMBERS OR ALPHABETICAL LETTERS. NUMBERS SHALL BE A MINIMUM OF 4 INCHES (102 MM) HIGH WITH A MINIMUM STROKE WIDTH OF 1/2 INCH (12.7 MM). WHERE ACCESS IS BY MEANS OF A PRIVATE ROAD AND THE BUILDING ADDRESS CANNOT BE VIEWED FROM THE PUBLIC WAY, A MONUMENT, POLE OR OTHER SIGN OR MEANS SHALL BE USED TO IDENTIFY THE STRUCTURE. (R319).
2. PROTECTION OF WOOD AND WOOD-BASED PRODUCTS FROM DECAY SHALL BE PROVIDED IN THE LOCATIONS SPECIFIED PER SECTION R317.1 BY THE USE OF NATURALLY DURABLE WOOD OR WOOD THAT IS PRESERVATIVE-TREATED IN ACCORDANCE WITH AWPA U1, TABLE 4, FOR THE SPECIES, PRODUCT, PRESERVATIVE AND END USE.
3. DAMPPROOFING, WHERE REQUIRED, SHALL BE INSTALLED WITH MATERIALS AND AS REQUIRED BY SECTION R406.1

FIRE PROTECTION

1. THE BUILDING SHALL BE EQUIPPED WITH AN AUTOMATIC RESIDENTIAL FIRE SPRINKLER SYSTEM IN ACCORDANCE WITH SECTION R313.3 OR NFPA13D. (R313, 12.21A17(D))
2. THE SPRINKLER SYSTEM SHALL BE APPROVED BY PLUMBING DIVISION PRIOR TO INSTALLATION
3. AN APPROVED SMOKE ALARM SHALL BE INSTALLED IN EACH SLEEPING ROOM & HALLWAY OR AREA GIVING ACCESS TO A SLEEPING ROOM, AND ON EACH STORY AND BASEMENT FOR DWELLINGS WITH MORE THAN ONE STORY. SMOKE ALARMS SHALL BE INTERCONNECTED SO THAT ACTUATION OF ONE ALARM WILL ACTIVATE ALL THE ALARMS WITHIN THE INDIVIDUAL DWELLING UNIT. IN NEW CONSTRUCTION SMOKE ALARMS SHALL RECEIVE THEIR PRIMARY POWER SOURCE FROM THE BUILDING WIRING AND SHALL BE EQUIPPED WITH BATTERY BACK-UP AND LOW BATTERY SIGNAL.(R314)
4. AN APPROVED CARBON MONOXIDE ALARM SHALL BE INSTALLED IN DWELLING UNITS AND IN SLEEPING UNITS WITHIN FUEL-BURNING APPLIANCES ARE INSTALLED AND IN DWELLING UNITS THAT HAVE ATTACHED GARAGES. CARBON MONOXIDE ALARM SHALL BE PROVIDED OUTSIDE OF EACH SEPARATE DWELLING UNIT SLEEPING AREA IN THE IMMEDIATE VICINITY OF THE BEDROOM(S) AND ON EVERY LEVEL OF A DWELLING UNIT INCLUDING BASEMENTS. (R315)
5. OPENINGS THROUGH A FLOOR / CEILING ASSEMBLY SHALL BE PROTECTED BY 1 HR SHAFT ENCLOSURE. THE SHAFT ENCLOSURE SHALL BE CONSTRUCTED OF FIRE BARRIERS AND HORIZONTAL ASSEMBLIES. (713)
6. PENETRATIONS IN WALLS REQUIRING PROTECTED OPENINGS MUST BE FIRESTOPPED WITH AN APPROVED MATERIAL IN ACCORDANCE WITH SECTION 714.3.1. SPACE BETWEEN PENETRATING MATERIALS (DESCRIBED BELOW) MUST BE DESIGNED TO PREVENT THE MOVEMENT OF HOT FLAME OR GASES
   A. STEEL, COPPER OR FERROUS PIPES OR CONDUITS MAY PENETRATE CONCRETE OR MASONRY WALLS WHERE THE PENETRATING ITEM IS A MAXIMUM 6-INCH DIAMETER AND THE AREA OF THE OPENING THROUGH THE WALL DOES NOT EXCEED 144 SQUARE INCHES. (714.3.1)
   B. MEMBRANE PENETRATIONS OF MAXIMUM 2-HR FIRE-RESISTANCE RATED WALL AND PARTITIONS BY STEEL ELECTRICAL OUTLET BOXES NOT EXCEEDING 16 SQUARE INCHES ARE PERMITTED PROVIDED OPENINGS DO NOT EXCEED 100 SQUARE INCHES FOR ANY 100 SQUARE FEET OF WALL AREA. OUTLET BOXES ON OPPOSITE SIDES OF WALLS OR PARTITIONS MUST BE SEPARATED BY A HORIZONTAL DISTANCE OF 24 INCHES. (714.3.2)
   C. WHERE WALLS ARE PENETRATED BY OTHER MATERIALS OR WHERE LARGER OPENINGS ARE REQUIRED THAN PERMITTED IN (B) ABOVE, THEY MUST BE QUALIFIED BY TESTS CONDUCTED IN ACCORDANCE WITH SECTION 714.3.1.2.
7. SMOKE AND FIRE DAMPERS MUST BE INSTALLED IN THE FOLLOWING LOCATIONS PER SECTIONS 714.3.1.2
   A. DUCT PENETRATIONS OF FIRE WALLS IN ACCORDANCE TO SECTION 717.1
   B. DUCT PENETRATIONS OF FIRE BARRIERS, EXCEPT EXIT ENCLOSURES AND EXIT PASSAGEWAYS WHERE THEY ARE NOT ALLOWED TO PENETRATE. (717.5.2)
   C. DUCTS PENETRATING SHAFTS. (717.5.3)
   D. DUCTS PENETRATING FIRE PARTITIONS AND FIRE-RATED CORRIDOR WALLS. SEE EXCEPTION FOR STEEL DUCTS WITH NO OPENINGS INTO CORRIDOR. (717.5.4)
   E. DUCTS PENETRATING SMOKE BARRIERS (717.5.5)
   F. DUCTS PENETRATING HORIZONTAL ASSEMBLIES (717.6)
8. FIRE BLOCKING MUST BE PROVIDED IN ACCORDANCE WITH SECTION 718.2 AT THE FOLLOWING LOCATIONS:
   A. IN CONCEALED SPACES OF STUD WALLS AND PARTITIONS, INCLUDING FURRED SPACES, AT THE CEILING AND FLOOR LEVELS.
   B. IN CONCEALED SPACES OF STUD WALLS AND PARTITIONS, INCLUDING FURRED SPACES, AT 10-FOOT INTERVALS ALONG THE LENGTH OF THE WALL.
   C. AT ALL INTERCONNECTIONS BETWEEN CONCEALED VERTICAL AND HORIZONTAL SPACES SUCH AS OCCUR AT SOFFITS, DROP CEILINGS, AND COVE CEILINGS.
   D. IN CONCEALED SPACES BETWEEN STAIR STRINGERS AT THE TOP AND BOTTOM OF THE RUN AND BETWEEN STUDS ALONG AND IN LINE WITH THE RUN OF STAIRS IF THE WALL UNDER THE STAIRS IS UNFINISHED.
   E. IN OPENINGS AROUND VENTS, PIPES, DUCTS, CHIMNEYS, FIREPLACES AND SIMILAR OPENINGS WHICH AFFORD A PASSAGE FOR FIRE AT CEILING AND FLOOR LEVELS, WITH NONCOMBUSTIBLE MATERIALS.
9. THIS BUILDING IS OF TYPE VA CONSTRUCTION, PROVIDE:
   A. CONTINUOUS DRYWALL BEHIND ALL TUBS IS REQUIRED UNLESS THE WALLS ARE WITHIN THE UNIT AND NON-BEARING. BACK TO BACK TUBS WITH A COMMON PLUMBING WALL ARE IMPRACTICAL IN 10HOUR BUILDINGS.
   B. ALL INTERIOR PARTITIONS SHALL BE CONSTRUCTED OF NOT LESS THAN 1-HOUR FIRE-RESISTIVE CONSTRUCTION.
   C. ATTIC ACCESS OPENINGS IN 1-HOUR CEILING CAN BE 2 LAYERS OF 3/4" PLYWOOD OR ONE LAYER OF 1-5/8" T&G MATERIAL, SELF-CLOSING.
   D. ALL OPENINGS IN FLOORS ARE REQUIRED TO BE ENCLOSED BY A SHAFT HAVING WALL, FLOOR, AND CEILING OF 1 HOUR FIRE RESISTIVE CONSTRUCTION. 714
   E. RECESSED CEILING LIGHT FIXTURES MUST BE BOXED AROUND WITH 5/8" TYPE "X" DRYWALL TO MAINTAIN THE 1-HOUR CEILING ASSEMBLY.
   F. CONTINUOUS DRYWALL IS REQUIRED BEHIND ALL ELECTRICAL SERVICE PANELS, FIRE HOSES AND MEDICINE CABINETS.
   G. EXHAUST FANS FROM THE BATHROOM MUST ENTER THROUGH THE WALL. DAMPERS ARE REQUIRED IF THE CEILING IS PENETRATED. (717.5)
   H. PLUMBING PENETRATION THROUGH HORIZONTAL OCCUPANCY SEPARATIONS SHALL BE BOXED OUT AND FILLED WITH APPROVED SAFING MATERIAL. INSULATION IS NOT APPROVED. (714.4.1)
   I. PENETRATION OF THE 1 HOUR CEILING BY DUCTS FROM THE FAU AND THE STOVE HOOD REQUIRE DAMPERS (USE A DUCTLESS HOOD WHENEVER POSSIBLE). ATTIC UNITS (INCLUDING HEAT PUMPS) REQUIRE DAMPERS AT ALL CEILING PENETRATIONS. (717.6.1)
   J. STEEL BEAMS AND COLUMNS SHALL BE PROTECTED AS REQUIRED FOR 1-HOUR PROTECTION. WHERE CEILING FORMS THE PROTECTIVE MEMBRANE FOR FIRE-RESISTIVE ASSEMBLIES (OCCUPANCY SEPARATIONS AND RATED ROOF/CEILING OR FLOOR/CEILING ASSEMBLIES), THE CONSTRUCTION (FLOOR JOISTS) AND THEIR SUPPORTING HORIZONTAL STRUCTURAL MEMBERS (BEAMS) NEED NOT BE INDIVIDUALLY FIRE PROTECTED EXCEPT WHERE SUCH MEMBERS SUPPORT DIRECTLY APPLIED LOADS FROM MORE THAN ONE FLOOR OR ROOF. THE REQUIRED FIRE RESISTANCE RATING SHALL NOT BE LESS THAN THAT REQUIRED FOR INDIVIDUAL PROTECTION OF MEMBERS. (704.3)
   K. ALL PLUMBING PENETRATIONS THRU WALLS WHICH REQUIRE PROTECTED OPENINGS (FIRE WALLS, FIRE BARRIERS, FIRE PARTITIONS) ARE REQUIRED TO BE GALVANIZED OR CAST IRON PIPING.

VERY HIGH FIRE SEVERITY ZONE (VHFHSZ) NOTES:

1. BASED ON CITY MAPS, THIS PROJECT IS LOCATED WITHIN VERY HIGH FIRE HAZARD SEVERITY ZONE (VHFHSZ). IT SHALL COMPLY WITH REQUIREMENTS OF MATERIALS, SYSTEMS & CONSTRUCTION METHODS OF CHAPTER 7A AND CHAPTER 72.
2. CLASS A ROOF COVERING IS REQUIRED FOR ALL BUILDINGS. (7207.4, 1505
3. VALLEY FLASHINGS SHALL BE NOT LESS THAN 0.019-INCH (0.48 MM) (NO. 26 GALVANIZED SHEET GAGE) CORROSION-RESISTANT METAL INSTALLED OVER A MINIMUM 36-INCH-WIDE (914MM) UNDERLAYMENT CONSISTING OF ONE LAYER OF NO. 72 ASTM CAP SHEET RUNNING THE FULL LENGTH OF THE VALLEY (704A.1.3) C. ROOF GUTTERS SHALL BE PROVIDED WITH THE MEANS TO PREVENT THE ACCUMULATION OF LEAVES AND DEBRIS IN THE GUTTER. (705A.4)
4. ROOF GUTTERS SHALL BE PROVIDED WITH THE MEANS TO PREVENT THE ACCUMULATION OF LEAVES AND DEBRIS IN THE GUTTER (704A.1.5)
5. (ROOF) (ATTIC)(EXTERIOR WALL) VENTS SHALL RESIST THE INTRUSION OF FLAME AND EMBERS INTO THE ATTIC AREA OF THE STRUCTURE, OR SHALL BE PROTECTED BY CORROSION-RESISTANT, NONCOMBUSTIBLE WIRE MESH WITH 1/4 -INCH (6 MM) OPENINGS OR ITS EQUIVALENT. VENTS SHALL NOT BE INSTALLED IN EAVES AND CORNICES. (704A.2.1, 704A3.2.1, 704A.2.2, 7207.3)
6. EAVES AND SOFFITS SHALL MEET THE REQUIREMENTS OF SFM 12-7A-3 OR SHALL BE PROTECTED BY IGNITION-RESISTANT MATERIALS OR NONCOMBUSTIBLE CONSTRUCTION ON THE EXPOSED UNDERSIDE (704A.2.3)
7. EXTERIOR WALLS SHALL BE APPROVED NONCOMBUSTIBLE OR IGNITION-RESISTANT MATERIAL, HEAVY TIMBER, OR LOG WALL CONSTRUCTION OR SHALL PROVIDE PROTECTION FROM THE INTRUSION OF FLAMES AND EMBERS IN ACCORDANCE WITH STANDARD SFM 12-7A-1. (704A.3.1)
8. EXTERIOR WALL COVERINGS SHALL EXTEND FROM THE TOP OF FOUNDATION TO THE ROOF, AND TERMINATE AT 2-INCH (50.8 MM) NOMINAL SOLID WOOD BLOCKING BETWEEN RAFTERS AT ALL ROOF OVERHANGS, OR IN THE CASE OF ENCLOSED EAVES, TERMINATE AT THE ENCLOSURE. (704A.3.2)
9. EXTERIOR WINDOWS, WINDOW WALLS, GLAZED DOORS, AND GLAZED OPENINGS WITHIN EXTERIOR DOORS SHALL BE INSULATING- GLASS UNITS WITH A MINIMUM OF ONE TEMPERED PANE, OR GLASS BLOCK UNITS, OR HAVE A FIRE- RESISTANCE RATING OF NOT LESS THAN 20 MINUTES, WHEN TESTED ACCORDING TO ASTM E 2010, OR CONFORM TO THE PERFORMANCE REQUIREMENTS OF SFM 12-7A-2 (704A.3.2.2)
10. EXTERIOR DOOR ASSEMBLIES SHALL CONFORM TO THE PERFORMANCE REQUIREMENTS OF STANDARD SFM 12-7A-1 OR SHALL BE APPROVED NONCOMBUSTIBLE CONSTRUCTION, OR SOLID CORE WOOD HAVING STILES AND RAILS NOT LESS THAN 1 3/8 INCHES THICK WITH INTERIOR FIELD PANEL THICKNESS NO LESS THAN 1 ¼ INCHES THICK, OR SHALL HAVE A FIRE-RESISTANCE RATING OF NOT LESS THAN 20 MINUTES WHEN TESTED ACCORDING TO ASTM E 2074. (EXCEPTION: NONCOMBUSTIBLE OR EXTERIOR FIRE-RETARDANT TREATED WOOD VEHICLE ACCESS DOORS). (704A.3.2.3)
11. DECKING, SURFACES, STAIR TREADS, RISERS, AND LANDINGS OF DECKS, PORCHES, AND BALCONIES WHERE ANY PORTION OF SUCH SURFACE IS WITHIN 10 FEET (3048 MM) OF THE PRIMARY STRUCTURE SHALL BE CONSTRUCTED OF HEAVY TIMBER, NON COMBUSTIBLE OR OTHER APPROVED MATERIALS PER SEC.704A.4.1
12. THE UNDERSIDE OF CANTILEVERED AND OVERHANGING APPENDAGES AND FLOOR PROJECTIONS SHALL MAINTAIN THE IGNITION- RESISTANT INTEGRITY OF EXTERIOR WALLS, OR THE PROJECTION SHALL BE ENCLOSED TO THE GRADE. (704A.4.2.1)
13. BUILDINGS SHALL HAVE ALL UNDERFLOOR AREAS COMPLETELY ENCLOSED TO THE GRADE WITH CONSTRUCTION AS REQUIRED FOR EXTERIOR WALLS. (704A.4.2.2, 7207.1)
14. ALL UTILITIES, PIPES, FURNACES, WATER HEATERS OR OTHER MECHANICAL DEVICES LOCATED IN AN EXPOSED UNDER-FLOOR AREA OF A RESIDENTIAL BUILDING SHALL BE ENCLOSED WITH MATERIALS AS REQUIRED FOR 1-HOUR FIRE-RESISTIVE CONSTRUCTION. (7207.2)
15. THE SPACE BETWEEN THE ROOF COVERING AND ROOF DECKING SHALL BE CONSTRUCTED TO PREVENT THE INTRUSION OF FLAMES AND EMBERS AND BE FIRE STOPPED PER 704A.1.2.
16. NO TRELLIS IS PERMITTED WITHIN 10 FEET OF THE PRIMARY STRUCTURE. TRELLIS MORE THAN 10 FEET FROM THE PRIMARY STRUCTURE SHALL BE CONSTRUCTED OF HEAVY TIMBER OR NON COMBUSTIBLE MATERIALS. MINIMUM OF 4 INCHES SPACING IS REQUIRED BETWEEN THE MEMBERS. (INFORMATION BULLETIN NO. P/BC 2008-023).

GRADING NOTES:

a. ALL GRADING SLOPES SHALL BE PLANTED AND SPRINKLERED (7012.1)
b. STANDARD 12" HIGH BERM IS REQUIRED AT TOP OF ALL GRADED SLOPES (7013.3)
c. NO FILL TO BE PLACED UNTIL THE CITY GRADING INSPECTOR HAS INSPECTED AND APPROVED THE BOTTOM EXCAVATION
d. MAN-MADE FILL SHALL BE COMPACTED TO A MINIMUM RELATIVE COMPACTION OF 90% MAX. DRY DENSITY WITHIN 40'-0" BELOW FINISH GRADE AND 93% OF MAX. DRY DENSITY DEEPER THAN 40'-0" BELOW FINISH GRADE, UNLESS A LOWER RELATIVE COMPACTION (NOT LESS THAN 90% MAX. DRY DENSITY) IS JUSTIFIED BY THE SOILS ENGINEER.
e. TEMPORARY EROSION CONTROL TO BE INSTALLED BETWEEN OCTOBER 1 AND APRIL 15. OBTAIN GRADING INSPECTOR'S AND DEPARTMENT OF PUBLIC WORKS APPROVAL OF PROPOSED PROCEDURES. [>200CY] (7007.1)
f. 100% OF EXCAVATED SOIL AND VEGETATION RESULTING FORM LAND CLEARING SHALL BE REUSED OR RECYCLED.

INTERIOR ENVIRONMENT:

1. PROVIDE 24" CLEAR SPACE IN FRONT OF ANY WATER CLOSET (CALIFORNIA PLUMBING CODE 407.6)
2. BATHROOM, WATER CLOSET COMPARTMENTS AND SIMILAR ROOMS SHALL BE PROVIDED NATURAL VENTILATION OR WITH MECHANICAL VENTILATION CAPABLE OF 50CFM EXHAUSTED DIRECTLY TO OUTSIDE (R303.3)
3. HEATER SHALL BE CAPABLE OF MAINTAINING A MINIMUM ROOM TEMPERATURE OF 68 DEGREES AT A POINT 3'-0" ABOVE THE FLOOR AND 2'-0" FROM THE EXTERIOR WALLS IN ALL HABITABLE ROOMS AT THE DESIGN TEMPERATURE (R303.9)

SECURITY REQUIREMENTS:

1. ALL ENTRY DOORS TO DWELLING UNITS OR GUEST ROOMS SHALL BE ARRANGED SO THAT THE OCCUPANT HAS A VIEW OF THE AREA IMMEDIATELY OUTSIDE THE DOOR WITHOUT OPENING THE DOOR. SUCH VIEW MAY BE PROVIDED BY A DOOR VIEWER, THROUGH WINDOWS LOCATED IN THE VICINITY OF THE DOOR OR THROUGH VIEW PORTS IN THE DOOR OR ADJOINING WALL. (6706)
2. SCREENS, BARRICADES, OR FENCES MADE OF A MATERIAL WHICH WOULD PRECLUDE HUMAN CLIMBING SHALL BE PROVIDED AT EVERY PORTION OF EVERY ROOF, BALCONY, OR SIMILAR SURFACE WHICH IS WITHIN 8 FT. OF THE UTILITY POLE OR SIMILAR STRUCTURES. (6707)
3. WOOD FLUSH-TYPE DOORS SHALL BE 1 3/8" THICK MINIMUM WITH SOLID CORE CONSTRUCTION. 91.6709.1 - DOOR STOPS OF IN-SWINGING DOORS SHALL BE OF ONE-PIECE CONSTRUCTION WITH THE JAMB OR JOINED BY RABBET TO THE JAMB. (6709.4)
4. EVERY DOOR IN A SECURITY OPENING FOR AN APARTMENT HOUSE SHALL BE PROVIDED WITH A LIGHT BULB (60 WATT MIN.) AT A MAXIMUM HEIGHT OF 8 FEET ON THE EXTERIOR. (6708)

ENVIRONMENTAL QUALITY BUILDING NOTES:

ENERGY EFFICIENCY:

1. 1. EACH APPLIANCE PROVIDED AND INSTALLED SHALL MEET ENERGY STAR IF AN ENERGY STAR DESIGNATION IS APPLICABLE FOR THAT APPLIANCE. (4.211.4)

WATER EFFICIENCY & CONSERVATION:

1. THE FLOW RATES FOR ALL PLUMBING FIXTURES SHALL COMPLY WITH THE MINIMUM FLOW RATES IN TABLE 4.303.2 (4.303.1)
2. WHEN SINGLE SHOWER FIXTURES ARE SERVED BY MORE THAN ONE SHOWERHEAD, THE COMBINED FLOW RATE OF ALL THE SHOWERHEADS SHALL NOT EXCEED THE MAXIMUM FLOW RATES SPECIFIED IN THE MAXIMUM ALLOWABLE FLOW RATE COLUMN CONTAINED IN TABLE 4.303.2 OR THE SHOWER SHALL BE DESIGNED TO ONLY ALLOW ONE SHOWERHEAD TO BE IN OPERATION AT A TIME. (4.303.2)
3. ALTERNATE WASTE PIPING SHALL BE INSTALLED TO PERMIT THE DISCHARGE FROM THE CLOTHES WASHER, BATHTUB, SHOWERS, AND BATHROOM/RESTROOM WASH BASINS TO BE USED FOR A FUTURE GRAYWATER IRRIGATION SYSTEM. THE FLOW FROM THE FIXTURES SHALL BE PIPED SEPARATELY. THE POINT OF CONNECTION BETWEEN THE GRAYWATER PIPING AND OTHER WASTE PIPING SHALL BE ACCESSIBLE (AS DEFINED IN SECTION 99.02.202) AND PROVIDED WITH SIGNAGE THAT IS SATISFACTORY TO THE DEPARTMENT. (4.305.1).

MATERIAL CONSERVATION AND RESOURCE EFFICIENCY:

1. ANNULAR SPACES AROUND PIPES, ELECTRIC CABLES, CONDUITS, OR OTHER OPENINGS IN THE BUILDING'S ENVELOPE AT EXTERIOR WALLS SHALL BE PROTECTED AGAINST THE PASSAGE OF RODENTS BY CLOSING SUCH OPENINGS WITH CEMENT MORTAR, CONCRETE MASONRY, OR METAL PLATES. (4.406.1)
2. MATERIALS DELIVERED TO THE CONSTRUCTION SITE SHALL BE PROTECTED FROM RAIN OR OTHER SOURCES OF MOISTURE. (4.407.4)
3. AN OPERATION ND MAINTENANCE MANUAL INCLUDING, AT A MINIMUM, THE ITEMS LISTED IN SECTION 4.410.1, SHALL BE COMPLETED AND PLACED IN THE BUILDING AT THE TIME OF FINAL INSPECTION. FORM GRN 6 (4.410.1)
4. CONSTRUCTION WASTE TO BE REDUCED BY 65%. TO BE HANDLED BY CITY OF LOS ANGELES CERTIFIED HAULER:
   A. AMERICAN RECLAMATION, INC. 4560 DORAN ST. LOS ANGELES, CA 90039
5. PRIMARY EXTERIOR ENTRIES SHALL BE COVERED TO PREVENT WATER INTRUSION BY USING NONABSORBENT FLOOR AND WALL FINISHES WITHIN AT LEAST 2 FEET AROUND AND PERPENDICULAR TO SUCH OPENINGS PLUS AT LEAST ONE OF THE FOLLOWING:
   A. AN INSTALLED AWNING OF AT LEAST 4 FEET IN DEPTH.
   B. THE DOOR IS PROTECTED BY A ROOF OVERHANG AT LEAST 4 FEET IN DEPTH.
   C. THE DOOR IS RECESSED AT LEAST 4 FEET.
   D. OTHER METHODS WHICH PROVIDE EQUIVALENT PROTECTION.

ENVIRONMENTAL QUALITY:

1. ALL DUCT AND OTHER RELATED AIR DISTRIBUTION COMPONENT OPENINGS SHALL BE COVERED WITH TAPE, PLASTIC, OR SHEET METAL UNTIL THE FINAL STARTUP OF THE HEATING AND COOLING EQUIPMENT. (5.504.3)
2. ARCHITECTURAL PAINTS AND COATINGS, ADHESIVES, CAULKS AND SEALANTS SHALL COMPLY WITH THE VOLATILE ORGANIC COMPOUND (VOC) LIMITS LISTED IN TABLES 5.504.1-5.504.3. (4.504.2.1-4.504.2.3)
3. THE VOC CONTENT VERIFICATION CHECKLIST, FORM GRN 2, SHALL BE COMPLETED AND VERIFIED PRIOR TO FINAL INSPECTION APPROVAL. THE MANUFACTURER'S SPECIFICATIONS SHOWING VOC CONTENT FOR ALL APPLICABLE PRODUCTS SHALL BE READILY AVAILABLE AT THE JOB SITE AND BE PROVIDED TO THE FIELD INSPECTOR FOR VERIFICATION. (4.504.2.4)
4. THE HEATING AND AIR-CONDITIONING SYSTEMS SHALL BE SIZED DESIGNED USING ANSI/ACCA MANUAL J 2004, ANSI/ACCA 29-D-2009 OR ASHRAE HANDBOOKS AND HAVE THEIR EQUIPMENT SELECTED IN ACCORDANCE WITH ANSI/ACCA 36-S MANUAL S-2004 . (4.507.2)
5. WHERE RESILIENT FLOORING IS INSTALLED, AT LEAST 50 PERCENT OF FLOOR AREA RECEIVING RESILIENT FLOORING SHALL COMPLY WITH THE VOC EMISSION LIMITS DEFINED IN THE COLLABORATIVE FOR HIGH PERFORMANCE SCHOOLS (CHPS) LOW-EMITTING MATERIALS LIST OR CERTIFIED UNDER THE RESILIENT FLOOR COVERING INSTITUTE (RFCI) FLOORSCORE PROGRAM.
6. BUILDING MATERIALS WITH VISIBLE WATER DAMAGE AND FLOOR OR WALL FRAMING WITH OVER 19% MOISTURE CONTENT SHALL NOT BE INSTALLED PER CGC 4.505.3.
7. HEATING AND AIR-CONDITIONING SYSTEM DESIGN. HEATING AND AIR-CONDITIONING SYSTEMS SHALL BE SIZED, DESIGNED AND HAVE THEIR EQUIPMENT SELECTED USING THE METHODS SPECIFIED IN 4.507.2.

a. THE VOC CONTENT VERIFICATION CHECKLIST, FORM GRN 2, SHALL BE COMPLETED AND VERIFIED PRIOR TO FINAL INSPECTION APPROVAL. THE MANUFACTURER'S SPECIFICATIONS SHOWING VOC CONTENT FOR ALL APPLICABLE PRODUCTS SHALL BE READILY AVAILABLE AT THE JOB SITE AND BE PROVIDED TO THE FIELD INSPECTOR FOR VERIFICATION." (4.504.2.4)

b. ALL NEW CARPET INSTALLED IN THE BUILDING INTERIOR SHALL MEET THE TESTING AND PRODUCT REQUIREMENTS OF ONE OF THE FOLLOWING: I. CARPET AND RUG INSTITUTE'S GREEN LABEL PLUS PROGRAM II. CALIFORNIA DEPARTMENT OF PUBLIC HEALTH STANDARD PRACTICE FOR THE TESTING OF VOCS (SPECIFICATION 01350) III. NSF/ANSI 140 AT THE GOLD LEVEL IV. SCIENTIFIC CERTIFICATIONS SYSTEMS INDOOR ADVANTAGE GOLD V. COMPLIANT WITH THE COLLABORATIVE FOR HIGH PERFORMANCE SCHOOLS CALIFORNIA (CA -CHPS) CRITERIA INTERPRETATION FOR EQ 7.0 AND 7.1 AND LISTED IN THE CHPS HIGH PERFORMANCE PRODUCT DATABASE. (5.504.4.4)

c. ALL NEW CARPET CUSHION INSTALLED IN THE BUILDING INTERIOR SHALL MEET THE REQUIREMENTS OF THE CARPET AND RUG INSTITUTE GREEN LABEL PROGRAM. (5.504.4.4.1)

d. 80% OF THE TOTAL AREA RECEIVING RESILIENT FLOORING SHALL COMPLY WITH ONE OR MORE OF THE FOLLOWING:
   - i. CERTIFIED AS A CHPS LOW-EMITTING MATERIAL IN THE CHPS HIGH PERFORMANCE PRODUCTS DATABASE
   - ii. CERTIFIED UNDER UL GREENGUARD GOLD
   - iii. CERTIFIED UNDER THE RESILIENT FLOOR COVERING INSTITUTE (RFCI) FLOORSCORE PROGRAM
   - iv. MEET THE CALIFORNIA DEPARTMENT OF PUBLIC HEALTH'S SPECIFICATION 01350 (5.504.4.6)

e. NEW HARDWOOD PLYWOOD, PARTICLE BOARD, AND MEDIUM DENSITY FIBERBOARD COMPOSITE WOOD PRODUCTS USED IN THE INTERIOR OR EXTERIOR OF THE BUILDING SHALL MEET THE FORMALDEHYDE LIMITS LISTED IN TABLE (5.504.4.5)

f. THE FORMALDEHYDE VERIFICATION CHECKLIST, GRN 3, SHALL BE COMPLETED PRIOR TO FINAL INSPECTION APPROVAL. THE MANUFACTURER'S SPECIFICATIONS FOR ALL APPLICABLE WOOD PRODUCTS SHALL BE READILY AVAILABLE AT THE JOB SITE AND PROVIDED TO THE FIELD INSPECTOR FOR VERIFICATION.

g. BUILDING MATERIALS WITH VISIBLE SIGNS OF WATER DAMAGE SHALL NOT BE INSTALLED. WALL AND FLOOR FRAMING SHALL NOT BE ENCLOSED UNTIL IT IS INSPECTED AND FOUND TO BE SATISFACTORY BY THE BUILDING INSPECTOR. (4.505.3)

h. NEWLY INSTALLED BATHROOM EXHAUST FANS SHALL BE ENERGY STAR COMPLIANT AND BE DUCTED TO TERMINATE TO THE OUTSIDE OF THE BUILDING AND. (4.506.1). WHOLE HOUSE EXHAUST FANS SHALL HAVE COVERS OR LOUVERS THAT CLOSE WHEN OFF, AND A MINIMUM R VALUE OF 4.2.

i. NEWLY INSTALLED BATHROOM EXHAUST FANS, NOT FUNCTIONING AS A COMPONENT OF A WHOLE HOUSE VENTILATION SYSTEM, MUST BE CONTROLLED BY A HUMIDISTAT WHICH SHALL BE READILY ACCESSIBLE. (4.506.1)

8. WHOLE HOUSE EXHAUST FANS SHALL HAVE COVERS OR LOUVERS WHICH CLOSE WHEN THE FAN IS OFF AND THAT ARE INSULATED WITH A MINIMUM INSULATION VALUE OF R-4.2 (4.507.1)
9. HEATING AND AIR-CONDITIONING SYSTEMS SHALL BE DESIGNED USING ASNI/ACCA MANUAL J-2004, ANSI/ACCA 27-D-2009 OR ASHRAE HANDBOOKS AND HAVE THEIR EQUIPMENT SELECTED IN ACCORDANCE WITH ANSI/ACCA 36-S MANUAL S-2004. (CALGREEN 4.507.2)
10. IN EXISTING DEVELOPMENTS, ONLY CLEANER WOOD BURNING DEVICES ARE ALLOWED. THE DEVICES THAT ARE ALLOWED SHALL BE EITHER US EPA PHASE ii-CERTIFIED WOOD HEATERS, PELLET-FUELED HEATERS, OR ASTM E 1602-03 DEFINED MASONRY HEATERS.
11. IF THE NEW HVAC SYSTEM IS USED DURING CONSTRUCTION, USE RETURN AIR FILTERS WITH A MERV OF 8. REPLACE ALL FILTERS IMMEDIATELY PRIOR TO OCCUPANCY.
12. AN AIR FILTER WITH A MINIMUM EFFICIENCY REPORTING VALUE (MERV) OF 8 OR HIGHER SHALL BE INSTALLED IN THE MECHANICAL SYSTEM FOR OUTSIDE AND RETURN AIR PRIOR TO OCCUPANCY. (5.504.5.3)
13. THE BUILDING SHALL MEET OR EXCEED THE PROVISIONS FOR MECHANICAL VENTILATION OF SECTION 1203 OF THE LOS ANGELES BUILDING CODE. (5.505.1)
14. ADDITIONS TO BUILDINGS THAT USE DEMAND CONTROL VENTILATION SHALL HAVE CO2 SENSORS AND VENTILATION CONTROLS INSTALLED IN ACCORDANCE WITH THE REQUIREMENTS OF THE CURRENT EDITION OF THE CALIFORNIA ENERGY CODE, CCR, TITLE 24, PART 6, SECTION 121(C). (5.506.2)
15. THE HVAC, REFRIGERATION, AND FIRE SUPPRESSION EQUIPMENT SHALL NOT CONTAIN CFC OR HALONS. (5.508.1)

OPENINGS IN THE BUILDING ENVELOPE FOR GAS, PLUMBING, AND ELECTRICAL LINES MUST BE SEALED IN COMPLIANCE WITH THE CALIFORNIA ENERGY CODE. ANNULAR SPACES AROUND PIPES, CABLES, CONDUITS, OR OTHER OPENINGS AT EXTERIOR WALLS SHALL BE PROTECTED AGAINST THE PASSAGE OF RODENTS WITH THE USE OF CEMENT MORTAR, CONCRETE MASONRY, OR OTHER SIMILAR METHODS APPROVED BY THE DEPARTMENT OF BUILDING AND SAFETY.

1. AT THE TIME OF FINAL INSPECTION, A MANUAL, COMPACT DISC, WEB-BASED REFERENCE OR OTHER MEDIA ACCEPTABLE TO THE ENFORCING AGENCY WHICH INCLUDES ALL OF THE FOLLOWING SHALL BE PLACED IN THE BUILDING:

a. DIRECTIONS TO THE OWNER OR OCCUPANT THAT THE MANUAL SHALL REMAIN WITH THE BUILDING THROUGHOUT THE LIFE CYCLE OF THE STRUCTURE.

b. OPERATION AND MAINTENANCE INSTRUCTIONS FOR THE FOLLOWING: A. EQUIPMENT AND APPLIANCES, INCLUDING WATER-SAVING DEVICES AND SYSTEMS, HVAC SYSTEMS, WATER-HEATING SYSTEMS AND OTHER MAJOR APPLIANCES AND EQUIPMENT. B. ROOF AND YARD DRAINAGE, INCLUDING GUTTERS AND DOWNSPOUTS. C. SPACE CONDITIONING SYSTEMS, INCLUDING CONDENSERS AND AIR FILTERS. D. LANDSCAPE IRRIGATION SYSTEMS. E. WATER REUSE SYSTEMS.

c. INFORMATION FROM LOCAL UTILITY, WATER AND WASTE RECOVERY PROVIDERS ON METHODS TO FURTHER REDUCE RESOURCE CONSUMPTION, INCLUDING RECYCLE PROGRAMS AND LOCATIONS

d. PUBLIC TRANSPORTATION AND/OR CARPOOL OPTIONS AVAILABLE IN THE AREA.

e. EDUCATIONAL MATERIAL ON THE POSITIVE IMPACTS OF AN INTERIOR RELATIVE HUMIDITY BETWEEN 30–60 PERCENT AND WHAT METHODS AN OCCUPANT MAY USE TO MAINTAIN THE RELATIVE HUMIDITY LEVEL IN THAT RANGE.

f. INFORMATION ABOUT WATER-CONSERVING LANDSCAPE AND IRRIGATION DESIGN AND CONTROLLERS WHICH CONSERVE WATER.

g. INSTRUCTIONS FOR MAINTAINING GUTTERS AND DOWNSPOUTS AND THE IMPORTANCE OF DIVERTING WATER AT LEAST 5 FEET AWAY FROM THE FOUNDATION.

h. INFORMATION ON REQUIRED ROUTINE MAINTENANCE MEASURES, INCLUDING, BUT NOT LIMITED TO, CAULKING, PAINTING, GRADING AROUND THE BUILDING, ETC.

i. INFORMATION ABOUT STATE SOLAR ENERGY AND INCENTIVE PROGRAMS AVAILABLE.

j. A COPY OF ALL SPECIAL INSPECTION VERIFICATIONS REQUIRED BY THE ENFORCING AGENCY OR THIS CODE.

LANDSCAPE NOTE:

1. FOR PROJECTS THAT INCLUDE LANDSCAPE WORK, THE LANDSCAPE CERTIFICATION, FORM GRN 12, SHALL BE COMPLETED PRIOR TO FINAL INSPECTION APPROVAL.
2. AUTOMATIC LANDSCAPE IRRIGATORS SHALL BE INSTALLED IN SUCH A WAY THAT IT DOESN'T SPRAY ON THE BUILDING.

ADDITIONAL NOTES: CONSTRUCTION HOURS

ENERGY EFFICIENCY

1. THE MAIN SERVICE PANEL SHALL HAVE A MINIMUM BUSBAR RATING OF 200 AMPS.
2. THE MAIN ELECTRICAL SERVICE PANEL SHALL HAVE A RESERVED SPACE TO ALLOW FOR INSTALLATION OF A DOUBLE POLE CIRCUIT BREAKER FOR A FUTURE SOLAR ELECTRIC INSTALLATION. THE RESERVED SPACE SHALL BE POSITIONED AT THE OPPOSITE (LOAD) END FROM THE INPUT FEEDER LOCATION OR MAIN CIRCUIT LOCATION AND SHALL BE PERMANENTLY MARKED AS 'FOR FUTURE SOLAR ELECTRIC'.
3. A COPY OF THE CONSTRUCTION DOCUMENTS OR A COMPARABLE DOCUMENT INDICATING THE INFORMATION FROM ENERGY CODE SECTIONS 110.10(B) THROUGH 110.10(C) SHALL BE PROVIDED

FIRE ALARM NOTES

FIRE ALARM SHOP DRAWINGS (*LAFD 907*)
SUBMIT SHOP DRAWINGS FOR FIRE ALARM SYSTEMS FOR REVIEW AND APPROVAL PRIOR TO SYSTEM INSTALLATION, AND SHALL INCLUDE, BUT NOT BE LIMITED TO, ALL OF THE FOLLOWING WHERE APPLICABLE TO THE SYSTEM BEING INSTALLED:

1. A FLOOR PLAN THAT INDICATES THE USE OF ALL ROOMS
2. LOCATIONS OF ALARM-INITIATING DEVICES
3. LOCATIONS OF ALARM NOTIFICATION APPLIANCES, INCLUDING CANDELA RATINGS FOR VISIBLE ALARM NOTIFICATION APPLIANCES
4. DESIGN MINIMUM AUDIBILITY LEVEL FOR OCCUPANT NOTIFICATION
5. LOCATION OF FIRE ALARM CONTROL UNIT, TRANSPONDERS AND NOTIFICATION POWER SUPPLIES
6. ANNUNCIATORS
7. POWER CONNECTION
8. BATTERY CALCULATIONS
9. CONDUCTOR TYPE AND SIZES
10. VOLTAGE DROP CALCULATIONS
11. MANUFACTURERS' DATA SHEETS INDICATING MODEL NUMBERS AND LISTING INFORMATION FOR EQUIPMENT, DEVICES AND MATERIALS
12. DETAILS OF CEILING HEIGHT AND CONSTRUCTION
13. THE INTERFACE OF FIRE SAFETY CONTROL FUNCTIONS
14. CLASSIFICATION OF THE SUPERVISING SITUATION
15. *ALL PLANS AND SHOP DRAWINGS SHALL USE THE SYMBOLS IDENTIFIED IN NFPA 170, STANDARD FOR FIRE SAFETY AND EMERGENCY SYMBOLS*
    A. ***EXCEPTION**: OTHER SYMBOLS ARE ALLOWED WHERE APPROVED BY THE ENFORCING AGENCY*
16. ELECTRICAL SCHEMATICS SHOWING THE FIRE ALARM SYSTEM AND ALL OTHER INFORMATION NECESSARY TO DETERMINE THE CORRECT METHODS OF INSTALLATION. PRIOR TO THE COMMENCEMENT OF INSTALLATION, THE MANUFACTURER AND STATE FIRE MARSHAL LISTING SHALL BE INCLUDED FOR ALL COMPONENTS OF THE SYSTEM
17. WRITTEN SEQUENCE OF OPERATION DESCRIBING, IN DETAIL, WHAT IS TO OCCUR UPON ACTIVATION OF A SYSTEM OR DEVICE AND HOW THE SYSTEM OR DEVICE INTERFACES WITH OTHER SYSTEMS. INCLUDED IN THIS WRITTEN SEQUENCE OF OPERATION SHALL BE ALL OTHER INFORMATION NECESSARY TO DETERMINE THE OPERATION WHICH WOULD BE REQUIRED FOR THE TYPE OF OCCUPANCY

ABBREVIATIONS

ACT	ACOUSTICAL CEILING TILE
AFF	ABOVE FINISH FLOOR
ALQ	ACCESSORY LIVING QUARTERS
ALT	ALTERNATE
AD	AREA DRAIN
BLDG	BUILDING
BOT	BOTTOM
CIP	CAST IN PLACE
CL	CENTER LINE
CLG	CEILING
CLR	CLEAR
COL	COLUMN
CONC	CONCRETE
CONT	CONTINUOUS
CPT	CARPET
CT	CERAMIC TILE
CMU	CONCRETE MASONRY UNIT
DIA	DIAMETER
DIM	DIMENSION
DN	DOWN SPOUT
DS	DETAIL
DTL	DRAWING
DWG	EAST
E	EXISTING
(E)	EACH
EA	ELEVATION
EL	ELECTRIC(AL)
ELEC	ELEVATOR
ELEV	EQUAL
EQ	EXPOSED
EXP	FLOOR DRAIN
FD	FINISH GRADE
FG	FLOOR
FL	FACE OF FINISH
FOF	FOOT
FT	GAUGE
GA	GLAZING
GLZ	GYPSUM WALL BOARD
GWB	HOSE BIBB
HB	HOLLOW CORE
HC	HARDWARE
HDWR	HOLLOW METAL
HM	HORIZONTAL
HOR	HOUR
HR	HEIGHT
HT	HEATING, VENTILATION AND AIR
HVAC	CONDITIONING
	INSIDE DIAMETER
ID	INSULATION
INS	MATERIAL
MAT	MAXIMUM
MAX	MANUFACTURER
MFR	MINIMUM
MIN	MISCELLANEOUS
MISC	METAL
MTL	NORTH
N	NOT IN CONTRACT
NIC	NUMBER
No	NOT TO SCALE
NTS	ON CENTER
OC	OUTSIDE DIAMETER
OD	RADIUS/RISER
R	REFERENCE
REF	REQUIRED
REQ	REVISION
REV	RIGHT OF WAY
ROW	SOUTH
S	SOLID CORE
SC	SIMILAR
SIM	SINGLE FAMILY DWELLING
SFD	SPECIFICATIONS
SPEC	SLOPE TO DRAIN
STD	STRUCTURAL
STRUCT	SQUARE FEET
SF	STONE TILE
ST	STUCCO
STC	STEEL
STL	STONE
STN	TREAD
T	TOP OF BEAM
TOB	TOP OF CONCRETE
TOC	TOP OF FLOOR
TOF	TOP OF SLAB
TOS	TOP OF WALL
TOW	TERRAZZO
TRZ	TYPICAL
TYP	UNLESS NOTED OTHERWISE
UNO	VERTICAL
VERT	WEST
W	WOOD
WD	WATERPROOF(ING)
WP	

SYMBOL LEGEND

NORT

Ref / 1 — **EXTERIOR ELEVATION**

1 / A101 SIM — **BUILDING SECTION**

1 / A101 / 1 / 1 — **INTERIOR ELEVATION**

10' - 0" / GYP-1 — **SPOT ELEVATION / CEILING TAG**
SPOT ELEVATIONS ARE TO FINISH GRADE, FLOOR, OR CEILING, UNLESS OTHERWISE NOTED.

1 / A101 SIM — **ENLARGED PLAN / DETAIL**

1 / A101 SIM — **DETAIL KEY**

1 — **REVISION CLOUD**

4' - 0" — **DIMENSIONS**
NOTE: PLAN DIMENSIONS OF WALLS ARE TO FACE OF STUD, CONCRETE, OR MASONRY UNLESS OTHERWISE NOTED.

CENTERLINE

PROPERTY LINE

0 — **GRID BUBBLE**

ROOM TAG
Bedroom — ROOM NAME
101 / 100 SF — ROOM NUMBER; ROOM AREA (NET SQUARE FEET)

101 — **DOOR TAG**

WINDOW TAG

WALL FRAMING TAG

WALL FINISH TAG

CON-1 — **MATERIAL TAG**

LEVEL CHANGE / SLAB DEPRESSION

RC-1 — **LIGHTING TAG**

SINK-4 — **PLUMBING FIXTURE TAG**

VIEW NAME 00
SCAL 3/32" = 1'-0"
E:
SCALE
DRAWING NUMBER

NOT FOR CONSTRUCTION

17.NOV.2021
100% DESIGN SUBMITTAL

ba
belzberg architects
2740 MAIN STREET
SANTA MONICA, CA 90405
310.453.9611
www.belzbergarchitects.com

#	DESCRIPTION	DATE

HOLOCAUST MUSEUM LA EXPANSION

100 THE GROVE DRIVE
LOS ANGELES, CA 90036

GENERAL NOTES, SYMBOLS & ABBREVIATIONS

PROJECT NUMBER: 17009

G004

11/18/2021 3:09:15 PM

FORM GRN 1

STORM WATER POLLUTION CONTROL
(2020 Los Angeles Green Building Code)

Storm Water Pollution Control Requirements for Construction Activities
Minimum Water Quality Protection Requirements for All Construction Projects

The following notes shall be incorporated in the approved set of construction/grading plans and represents the minimum standards of good housekeeping which must be implemented on all construction projects.

Construction means constructing, clearing, grading or excavation that result in soil disturbance. Construction includes structure teardown (demolition). It does not include routine maintenance to maintain original line and grade, hydraulic capacity, or original purpose of facility; emergency construction activities required to immediately protect public health and safety; interior remodeling with no outside exposure of construction material or construction waste to storm water; mechanical permit work; or sign permit work. (Order No. 01-182, NPDES Permit No. CAS004001 – Part 5: Definitions)

1. Eroded sediments and pollutants shall be retained on site and shall not be transported from the site via sheet flow, swales, area drains, natural drainage or wind.
2. Stockpiles of earth and other construction-related materials shall be covered and/or protected from being transported from the site by wind or water.
3. Fuels, oils, solvents and other toxic materials must be stored in accordance with their listing and shall not contaminate the soil nor the surface waters. All approved toxic storage containers are to be protected from the weather. Spills must be cleaned up immediately and disposed of properly and shall not be washed into the drainage system.
4. Non-storm water runoff from equipment and vehicle washing and any other activity shall be contained on the project site.
5. Excess or waste concrete may not be washed into the public way or any drainage system. Provisions shall be made to retain concrete waste on-site until it can be appropriately disposed of or recycled.
6. Trash and construction –related solid wastes must be deposited into a covered receptacle to prevent contamination of storm water and dispersal by wind.
7. Sediments and other materials shall not be tracked from the site by vehicle traffic. The construction entrance roadways must be stabilized so as to inhibit sediments from being deposited into the street/public ways. Accidental depositions must be swept up immediately and may not be washed down by rain or by any other means.
8. Retention basins of sufficient size shall be provided to retain storm water runoff on-site and shall be properly located to collect all tributary site runoff.
9. Where retention of storm water runoff on-site is not feasible due to site constraints, runoff may be conveyed to the street and the storm drain system provided that an approved filtering system is installed and maintained on-site during the construction duration.

As a covered entity under Title II of the Americans with Disabilities Act, the City of Los Angeles does not discriminate on the basis of disability and, upon request, will provide reasonable accommodation to ensure equal access to its programs, services and activities.

FORM GRN 10

2020 Los Angeles Green Building Code

MANDATORY REQUIREMENTS CHECKLIST
ADDITIONS AND ALTERATIONS TO NON-RESIDENTIAL BUILDINGS
(COMPLETE AND INCORPORATE THIS FORM INTO THE PLANS)

Permit # _____ - _____ - _____ Date: _____

ITEM #	CODE SECTION	REQUIREMENTS	REFERENCE SHEET (Sheet # or N/A)	COMMENTS (e.g. note #, detail # or reason for N/A)
		PLANNING AND DESIGN		
1	5.106.1	**Storm water drainage and retention during construction**	G020	GRN1
2	5.106.4.1.1	**Short-term bicycle parking (≥ 10 vehicular parking spaces)**		
3	5.106.4.1.2	**Long-term bicycle parking (≥ 10 vehicular parking spaces)**		
4	5.106.5.2	**Designated parking (≥ 10 vehicular parking spaces)**		
5	5.106.10	**Grading and Paving**		
		ENERGY EFFICIENCY		
6	5.211.1	**Solar ready (additions ≥ 2,000 sq. ft.)**	E221A and E221B	Roof plan.
		WATER EFFICIENCY & CONSERVATION		
7	5.303.1.1	**Additions in excess of 50,000 sq. ft.**	N/A	N/A
8	5.303.1.2	**Excess consumption**	N/A	N/A
9	5.303.2	**Water reduction**	P010	Schedule
10	5.303.3	**Water conserving plumbing fixtures and fittings**	P010	Schedule
11	5.303.3.3	**Showerheads**	N/A	N/A
12	5.304.1	**Outdoor water use in landscape areas**	G021	GRN 18N
13	5.304.3	**Irrigation controller and sensor application**	G020	GRN 15, #6
14	5.304.4	**Outdoor water use meters**	G021	GRN 18N, #4
15	5.304.5	**Exterior faucets**	P010	Schedule
16	5.305.1	**Graywater ready**	N/A	N/A
17	5.305.2	**Recycled water supply to fixtures**	N/A	N/A
		MATERIAL CONSERVATION & RESOURCE EFFICIENCY		
18	5.407.1	**Weather protection**		
19	5.407.2.1	**Sprinklers**	Spec section 211314	Included in specs.
20	5.407.2.2.1	**Nonabsorbent floor and wall finishes**		
21		**Exterior door protection**		
22	5.407.2.2.2	**Flashing**		
23	5.408.1	**Construction waste reduction**		
24	5.408.3	**Excavated soil and land clearing debris**		

As a covered entity under Title II of the Americans with Disabilities Act, the City of Los Angeles does not discriminate on the basis of disability and, upon request, will provide reasonable accommodation to ensure equal access to its programs, services and activities.

FORM GRN 10

2020 Los Angeles Green Building Code

ITEM #	CODE SECTION	REQUIREMENTS	REFERENCE SHEET (Sheet # or N/A)	COMMENTS (e.g. note #, detail # or reason for N/A)
25	5.410.1	**Recycling by occupants (additions that are > 30% of existing floor area)**		
26	5.410.4	**Testing, adjusting and balancing**	Spec section 230800	Included in spec.
27	5.410.4.2	– **Systems**	Spec section 230800	Included in spec.
28	5.410.4.3	– **Procedures**	Spec section 230800	Included in spec.
29	5.410.4.4	– **Reporting**	Spec section 230800	Included in spec.
30	5.410.4.5	– **Operation and maintenance manual**	Spec section 230800	Included in spec.
31	5.410.4.5.1	– **Inspections and reports**	Spec section 230800	Included in spec.
		ENVIRONMENTAL QUALITY		
32	5.503.1	**Fireplace and Woodstoves**	N/A	N/A
33	5.504.1.3	**Temporary ventilation**	N/A	N/A
34	5.504.3	**Covering of duct openings and protection of mechanical equipment during construction**	Spec section 230500-3.5-C	Included in spec.
35	5.504.4	**Finish material pollutant control**	G020	GRN-11
36	5.504.4.1	– **Adhesives, sealants, and caulks**		
37	5.504.4.3	– **Paints and coatings**		
38	5.504.4.3.1	– **Aerosol paints and coatings**		
39	5.504.4.3.2	– **Verification**		
40	5.504.4.4	**Carpet systems**	G020	GRN-15 #21
41	5.504.4.4.1	**Carpet cushion**	G020	GRN-15 #22
42	5.504.4.5	**Composite wood products**	G020	GRN-15 #23,24
43	5.504.4.6	**Resilient flooring systems**	G020	GRN-15 #25
44	5.504.5.3	**Filters**	M010	AHU Schedule
45	5.504.7	**Environmental tobacco smoke (ETS) control**	G020	GRN-15 #27
46	5.505.1	**Indoor moisture control**	G020	GRN-15 #28
47	5.506.2	**Carbon dioxide (CO_2) monitoring**	Spec section 230913-2.5-A	Included in spec.
48	5.507.4.1	**Exterior noise transmission prescriptive method**		
49		– **Exterior noise transmission for roof**		
50		– **Exterior noise transmission for walls**		
51		– **Exterior noise transmission for windows**		
52	5.507.4.2	**Exterior noise transmission performance method**		
52	5.507.4.3	**Interior sound transmission**	N/A	SINGLE TENANT
53	5.508.1	**Ozone depletion and greenhouse gas reductions**	M010	AHU Schedule
54	5.508.2	**Supermarket refrigerant leak reduction**	N/A	Not applicable.

As a covered entity under Title II of the Americans with Disabilities Act, the City of Los Angeles does not discriminate on the basis of disability and, upon request, will provide reasonable accommodation to ensure equal access to its programs, services and activities.

FORM GRN 11

VOC AND FORMALDEHYDE LIMITS
2020 Los Angeles Green Building Code
(Incorporate this form into the plans)

2020 Los Angeles Green Building Code Tables 4.504.1, 4.504.2, 4.504.3, 4.504.5, 5.504.4.1, 5.504.4.2, 5.504.4.3, 5.504.4.5

VOC CONTENT LIMITS FOR ARCHITECTURAL COATINGS [2,3]
Grams of VOC per Liter of Coating, Less Water and Less Exempt Compounds

COATING CATEGORY [2,3]	CURRENT LIMIT
Flat coatings	50
Nonflat coatings	50
Nonflat-high gloss coatings	50
Specialty Coatings	
Aluminum roof coatings	100
Basement specialty coatings	400
Bituminous roof coatings	50
Bituminous roof primers	350
Bond breakers	350
Concrete curing compounds	100
Concrete curing compounds, Roadways & Bridges	350
Concrete/masonry sealers	100
Driveway sealers	50
Dry fog coatings	50
Faux finishing coatings	
Clear Top Coat	100
Decorative Coatings	350
Glazes	350
Japan	350
Trowel Applied Coatings	50
Fire resistive coatings	150
Floor coatings	50
Form-release compounds	100
Graphic arts coatings (sign paints)	200
High temperature coatings	420
Industrial maintenance coatings	100
Low solids coatings[1]	120
Magnesite cement coatings	450
Mastic texture coatings	100
Metallic pigmented coatings	150
Multicolor coatings	250
Pretreatment wash primers	420
Primers, sealers, and undercoaters	100
Reactive penetrating sealers	350
Recycled coatings	250
Roof coatings	50
Roof coatings, aluminum	100
Rust preventative coatings	100
Shellacs	
Clear	730
Opaque	550
Specialty primers, sealers and undercoaters	100
Stains	100
Stains, Interior	250
Stone consolidants	450
Swimming pool coatings	340
Traffic marking coatings	100
Tub and tile refinish coatings	420
Waterproofing membranes	100
Wood coatings	275
Wood preservatives	350
Zinc-rich primers	100

[1] Grams of VOC per liter of coating, including water and including exempt compounds.
[2] The specified limits remain in effect unless revised limits are listed in subsequent columns in the table.
[3] More values in this table are derived from those specified by the California Air Resources Board, Architectural Coatings Suggested Control Measure, February 5, 2016. More information is available from the Air Resources Board.

FORMALDEHYDE LIMITS[1]
Maximum Formaldehyde Emissions in Parts per Million, Less Water and Less Exempt Compounds

PRODUCT	CURRENT LIMIT
Hardwood plywood veneer core	0.05
Hardwood plywood composite core	0.05
Particleboard	0.09
Medium density fiberboard	0.11
Thin medium density fiberboard[2]	0.13

[1] Values in this table are derived from those specified by the California Air Resources Board, Air Toxic Control Measure for Composite Wood as amended by Executive Order G-A-STATE 1333. For additional information, see California Code of Regulations, Title 17, Sections 93120 through 93120.12.
[2] Thin medium density fiberboard has a maximum thickness of 5/16 inches (8 mm).

SEALANT VOC LIMIT
Less Water and Less Exempt Compounds in Grams per Liter

SEALANTS	CURRENT VOC LIMIT
Architectural	50
Marine deck	760
Nonmembrane roof	300
Roadway	250
Single-ply roof membrane	450
Other	420
SEALANT PRIMERS	
Architectural	
Nonporous	250
Porous	775
Modified bituminous 500	500
Marine deck	760
Other	750

Note: For additional information regarding methods to measure the VOC content specified in these tables, see South Coast Air Quality Management District Rule 1168.

ADHESIVE VOC LIMIT 1,2
Less Water and Less Exempt Compounds in Grams per Liter

ARCHITECTURAL APPLICATIONS	CURRENT VOC LIMIT
Indoor carpet adhesives	50
Carpet pad adhesives	50
Outdoor carpet adhesives	150
Wood flooring adhesive	100
Rubber floor adhesives	60
Subfloor adhesives	50
Ceramic tile adhesives	65
VCT and asphalt tile adhesives	50
Drywall and panel adhesives	50
Cove base adhesives	50
Multipurpose construction adhesives	70
Structural glazing adhesives	100
Single-ply roof membrane adhesives	250
Other adhesives not specifically listed	50
SPECIALTY APPLICATIONS	
PVC welding	510
CPVC welding	490
ABS welding	325
Plastic cement welding	100
Adhesive primer for plastic	550
Contact adhesive	80
Special purpose contact adhesive	250
Structural wood member adhesive	140
Top and trim adhesive	250
SUBSTRATE SPECIFIC APPLICATIONS	
Metal to metal	30
Plastic foams	50
Porous material (except wood)	50
Wood	30
Fiberglass	80

[1] If an adhesive is used to bond dissimilar substrates together, the adhesive with the highest VOC content shall be allowed.
[2] For additional information regarding methods to measure the VOC content specified in this table, see South Coast Air Quality Management District Rule 1168, http://www.arb.ca.gov/DRDB/SC/CURHTML/R1168.PDF.

As a covered entity under Title II of the Americans with Disabilities Act, the City of Los Angeles does not discriminate on the basis of disability and, upon request, will provide reasonable accommodation to ensure equal access to its programs, services and activities.

FORM GRN 15

2020 Los Angeles Green Building Code

GREEN BUILDING CODE PLAN CHECK NOTES
NON-RESIDENTIAL BUILDINGS

1. State on plans that the outdoor lighting systems shall be designed and installed to comply with all of the following:
   a. The minimum requirements in California Energy Code for Lighting Zones 1-4
   b. Backlight, Uplight and Glare (BUG) ratings as defined in IESNA TM-15-11
   c. Allowable BUG ratings not exceeding those shown in on Table 5.106.8. (5.106.8)
2. Separate submeters shall be installed in any building or new space within a building that is projected to consume more than 1,000 gal/day. (5.303.1.2)
3. New plumbing fixtures and fittings shall not exceed the maximum allowable flow rate specified in Section 5.303.3. (5.303.3)
4. When a shower is served by more than one showerhead, the combined flow rate of all the showerheads and/or other shower outlets controlled by a single valve shall not exceed 2.0 gallons per minute at 80psi, or the shower shall be designed to only allow one showerhead to be in operation at a time. (5.303.3.3)
5. For projects that include landscape work, the *Landscape Certification*, Form GRN 12, shall be completed prior to final inspection approval. (State Assembly Bill No. 1881)
6. Installed automatic irrigation system controllers are weather- or soil-based controllers. (WMELO, § 492.7)
7. Weather-resistant exterior wall and foundation envelope shall be detailed in conformance with Los Angeles Building Code Section 1403.2 and California Energy Code Section 150. (5.407.1)
8. Automatic landscape irrigators shall be installed such that it doesn't spray on the structure. (5.407.2.1)
9. New exterior entries and openings subject to foot traffic shall be protected against water intrusion using features such as overhangs, awnings and/or recesses for a combined depth over the entry of at least 4 feet. (5.407.2.2.1)
10. Nonabsorbent interior floor and wall finishes shall be used within at least two feet around and perpendicular to new exterior entries and/or opening subject to foot traffic. (5.407.2.2.1)
11. Exterior entries shall have flashing integrated with the drainage plane. (5.407.2.2.2)
12. Only a City of Los Angeles certified hauler will be used for hauling of construction waste. (5.408.1)
13. 100% of excavated soil and vegetation resulting from land clearing shall be reused or recycled. (5.408.3)
14. A final report for the testing and adjusting of all new systems shall be completed and provided to the field inspector prior to final approval. This report shall be signed by the individual responsible for performing these services. (5.410.4.4)
15. For all new equipment, an *Operation & Systems Manual* shall be provided to the owner and the field inspector at the time of final inspection. (5.410.4.5)
16. All new gas fireplaces must be direct-vent, sealed combustion type. Wood burning fireplaces are prohibited per AQMD Rule 445. (5.503.1, AQMD Rule 445)
17. If the new HVAC system is used during construction, use return air filters with a MERV of 8. Replace all filters immediately prior to occupancy. (5.504.1.3)
18. All new ducts and other new related air distribution components openings shall be covered with tape, plastic, or sheet metal until the final startup of the heating, cooling and ventilating equipment. (5.504.3)
19. Architectural paints and coatings, adhesives, caulks and sealants shall comply with the Volatile Organic Compound (VOC) limits listed in Tables 5.504.4.1- 5.504.4.3. (5.504.4.1- 5.504.4.3)
20. The *VOC Content Verification Checklist*, Form GRN 2, shall be completed and verified prior to final inspection approval. The manufacturer's specifications showing VOC content for all applicable products shall be readily available at the job site and be provided to the field inspector for verification. (5.504.4.3.2)
21. All new carpet installed in the building interior meets the testing and product requirements of one of the following:
   a. Carpet and Rug Institute's Green Label Plus Program
   b. California Department of Public Health's Specification 01350
   c. NSF/ANSI 140 at the Gold level
   d. Scientific Certifications Systems Indoor Advantage™ Gold (5.504.4.4)
22. All new carpet cushion installed in the building interior shall meet the requirements of the Carpet and Rug Institute Green Label program. (5.504.4.4.1)
23. New hardwood plywood, particle board, and medium density fiberboard composite wood products used in the interior or exterior of the building shall meet the formaldehyde limits. (5.504.4.5, 10.504.4.5)
24. The *Formaldehyde Emissions Verification Checklist,* Form GRN 3, shall be completed prior to final inspection approval. The manufacturer's specifications showing formaldehyde content for all applicable wood products shall be readily available at the job site and be provided to the field inspector for verification. (5.504.4.5)
25. 80% of the total area receiving new resilient flooring shall comply with one or more of the following:
   a. VOC emission limits defined in the CHPS High Performance Products Database
   b. Certified under UL GREENGUARD Gold
   c. Certification under the Resilient Floor Covering Institute (RFCI) FloorScore program
   d. Meet the California Department of Public Health's Specification 01350 (5.504.4.6)
26. Mechanically ventilated buildings shall have air filter with a Minimum Efficiency Reporting Value (MERV) of 13 or higher. Filters shall be installed prior to occupancy and recommendations for maintenance with filters of the same value shall be included in the operation and maintenance manual. (5.504.5.3)
27. Designated outdoor smoking area shall be at least 25 feet from an outdoor air intake or operable windows. (5.504.7)
28. Buildings shall meet or exceed the provisions of California Building Code, CCR, Title 24, Part 2 Sections 1202 (Ventilation) and Chapter 14 (Exterior Walls). For additional measures, see Section 5.407.2 (5.505.1)
29. Buildings that use Demand Control Ventilation shall have CO_2 sensors and ventilation controls installed in accordance with the requirements of the current edition of the California Energy Code, CCR, Title 24, Part 6, Section 121(c). (5.506.2)
30. The HVAC, refrigeration, and fire suppression equipment shall not contain CFC or Halons. (5.508.1)
31. Retail food stores of 8,000 sq. ft. or more of conditioned area that have a commercial refrigeration system with a global warming potential (GWP) of 150 or greater shall have leak reduction measures in accordance with LAGBC Section 5.508.2. Separate mechanical plan check is required. (5.508.2)

As a covered entity under Title II of the Americans with Disabilities Act, the City of Los Angeles does not discriminate on the basis of disability and, upon request, will provide reasonable accommodation to ensure equal access to its programs, services and activities.

FORM GRN 16

PLUMBING FIXTURE FLOW RATES
Residential Occupancies
2020 Los Angeles Green Building Code
(Incorporate this form into the plans)

SECTION 4.303.1
WATER REDUCTION FIXTURE FLOW RATES

FIXTURE TYPE	MAXIMUM ALLOWABLE FLOW RATE
Showerheads	1.8 gpm @ 80 psi
Lavatory faucets, residential	1.2 gpm @ 60 psi[1,3]
Lavatory faucets, nonresidential	0.4 gpm @ 60 psi[1,3]
Kitchen faucets	1.5 gpm @ 60 psi[2,4]
Metering Faucets	0.2 gallons/cycle
Gravity tank type water closets	1.28 gallons/flush[5]
Flushometer tank water closets	1.28 gallons/flush[5]
Flushometer valve water closets	1.28 gallons/flush[5]
Urinals	0.125 gallons/flush
Clothes Washers	ENERGY-STAR certified
Dishwashers	ENERGY-STAR certified

[1] Lavatory Faucets shall not have a flow rate less than 0.8 gpm at 20 psi.
[2] Kitchen faucets may temporarily increase flow above the maximum rate, but not above 2.2gpm @ 60psi and must default to a maximum flow rate of 1.8 gpm @ 60psi.
[3] Where complying faucets are unavailable, aerators or other means may be used to achieve reduction.
[4] Kitchen faucets with a maximum 1.8 gpm flow rate may be installed in buildings that have water closets with a maximum flush rate of 1.06 gallons/flush installed throughout.
[5] Includes single and dual flush water closets with an effective flush of 1.28 gallons or less.
Single Flush Toilets - The effective flush volume shall not exceed 1.28 gallons (4.8 liters). The effective flush volume is the average flush volume when tested in accordance with ASME A112.19.233.2.
Dual Flush Toilets - The effective flush volume shall not exceed 1.28 gallons (4.8 liters). The effective flush volume is defined as the composite, average flush volume of two reduced flushes and one full flush. Flush volumes will be tested in accordance with ASME A112.19.2 and ASME A112.19.14.

As a covered entity under Title II of the Americans with Disabilities Act, the City of Los Angeles does not discriminate on the basis of disability and, upon request, will provide reasonable accommodation to ensure equal access to its programs, services and activities.

FORM GRN 17

PLUMBING FIXTURE FLOW RATES
Non-Residential Occupancies
2020 Los Angeles Green Building Code
(Incorporate this form into the plans)

SECTION 5.303.2
WATER REDUCTION FIXTURE FLOW RATES

FIXTURE TYPE	MAXIMUM ALLOWABLE FLOW RATE
Showerheads	1.8 gpm @ 80 psi
Lavatory faucets, residential	1.2 gpm @ 60 psi[1,3]
Lavatory Faucets, nonresidential	0.4 gpm @ 60 psi[1,3]
Kitchen faucets	1.5 gpm @ 60 psi[2,4,5]
Wash fountains	1.8 gpm for every 20 in. of rim space @60 psi
Metering faucets	0.2 gallons/cycle
Metering faucets for wash fountains	0.2 gpm for every 20 in. of rim space @ 60 psi
Gravity tank type water closets	1.28 gallons/flush[6]
Flushometer tank water closets	1.28 gallons/flush[6]
Flushometer valve water closets	1.28 gallons/flush[6]
Urinals	0.125 gallons/flush
Clothes Washers	ENERGY-STAR certified
Dishwashers	ENERGY-STAR certified

[1] Lavatory faucets shall not have a flow rate less than 0.8 gpm at 20 psi.
[2] Kitchen faucets may temporarily increase flow above the maximum rate, but not above 2.2gpm @ 60psi and must default to a maximum flow rate of 1.8 gpm @ 60psi.
[3] Where complying faucets are unavailable, aerators or other means may be used to achieve reduction.
[4] Kitchen faucets with a maximum 1.8 gpm flow rate may be installed in buildings that have water closets with a maximum flush rate of 1.06 gallons/flush installed throughout
[5] This requirement does not apply to faucets in commercial kitchens.
[6] Includes single and dual flush water closets with an effective flush of 1.28 gallons or less.
Single Flush Toilets - The effective flush volume shall not exceed 1.28 gallons (4.8 liters). The effective flush volume is the average flush volume when tested in accordance with ASME A112.19.233.2.
Dual Flush Toilets - The effective flush volume shall not exceed 1.28 gallons (4.8 liters). The effective flush volume is defined as the composite, average flush volume of two reduced flushes and one full flush. Flush volumes will be tested in accordance with ASME A112.19.2 and ASME A112.19.14.

As a covered entity under Title II of the Americans with Disabilities Act, the City of Los Angeles does not discriminate on the basis of disability and, upon request, will provide reasonable accommodation to ensure equal access to its programs, services and activities.

FORM GRN 18N

2020 Los Angeles Green Building Code

WATER CONSERVATION ORDINANCE NOTES
NON-RESIDENTIAL BUILDINGS

1. For new buildings or additions exceeding 50,000 ft², install a separate water meter or sub-meter for the following areas:
   A. For each individual leased, rented, or other tenant space within the building projected to consume more than 100 gpd (380 L/day).
   B. Where potable water is used for industrial/process uses, for water supplied to the following subsystems:
      a. Makeup water for cooling towers where flow through is greater than 500 gpm (30 L/s).
      b. Makeup water for evaporative coolers greater than 6 gpm (0.04 L/s).
      c. Steam and hot-water boilers with energy input more than 500,000 Btu/h (147 kW).
   C. For each building that uses more than 100 gpd on a parcel containing multiple buildings. (5.303.1.1)
2. Provide a 20% reduction in the overall potable water use for each building. The reduction shall be based on the maximum allowable water use per plumbing fixture and fittings as required by the Los Angeles Plumbing Code. New projects having a water supply of 2"or less and additions and alterations projects may use the prescriptive method outlined in this section. (5.303.2)
3. A water budget for landscape irrigation use that conforms to the California Department of Water Resources' Model Water Efficient Landscape Ordinance (MWELO) is required for new landscape areas of 500 sqft or more. The following methods to reduce potable water use in landscape areas include, but are not limited to, use of captured rainwater, recycled water, graywater, or water treated for irrigation purposes and conveyed by a water district or public entity. (5.304.1, 5.304.2)
4. New buildings on a site with 1,000 square feet or more of cumulative landscape area shall have separate meters or submeters for outdoor water use. (5.304.4)
5. Additions and alterations on a site with 1,000 square feet of cumulative landscape area which require water service upgrade shall have separate meters or submeters for outdoor water use. (5.304.4)
6. Locks shall be installed on all publicly accessible exterior faucets and hose bibs. (5.304.5)
7. Except as provided in this section, for sites with over 500 square feet of landscape area, alternate waste piping shall be installed to permit discharge from the clothes washer, bathtub, showers, and bathroom/restrooms wash basins to be used for a future graywater irrigation system (5.305.1)
8. Except as provided in this section, where City-recycled water is available within 200 feet of the property line, water closets, urinals, floor drains, and process cooling and heating in the building shall be supplied from recycled water and shall be installed in accordance with the Los Angeles Plumbing Code. (5.305.2)
9. Cooling towers shall comply with one of the following:
   A. Shall have a minimum of 6 cycles of concentration (blowdown)
   B. A minimum of 50% of the makeup water supply to the cooling towers shall come from non-potable water sources, including treated backwash. (5.305.3)
10. Develop and construct a system for onsite reuse of the groundwater where groundwater is being extracted and discharged. Alternatively, the groundwater may be discharged to the sewer. (5.305.4)
11. Provide a hot water system complying with one of the following:
   A. The hot water system shall not allow more than 0.6 gallons of water to be delivered to any fixture before hot water arrives.
   B. Where a hot water recirculation or electric resistance heat trace wire system is installed, the branch from the recirculating loop or electric resistance heat trace wire to the fixture shall contain a maximum of 0.6 gallons. (Los Angeles Plumbing Code Section 610.4.1)

As a covered entity under Title II of the Americans with Disabilities Act, the City of Los Angeles does not discriminate on the basis of disability and, upon request, will provide reasonable accommodation to ensure equal access to its programs, services and activities.

NOT FOR CONSTRUCTION

17.NOV.2021
100% DESIGN SUBMITTAL

ba
belzberg architects
2740 MAIN STREET
SANTA MONICA, CA 90405
310.453.9611
www.belzbergarchitects.com

#	DESCRIPTION	DATE

HOLOCAUST MUSEUM LA EXPANSION

100 THE GROVE DRIVE
LOS ANGELES, CA 90036

GREEN BUILDING FORMS

PROJECT NUMBER: 17009

G020

11/18/2021 3:09:16 PM

LA DBS DEPARTMENT OF BUILDING AND SAFETY

2020 Los Angeles Green Building Code

FORM GRN 18R

WATER CONSERVATION NOTES - ORDINANCE #184248

RESIDENTIAL BUILDINGS

PLUMBING SYSTEM

1. Multi-family dwellings not exceeding three stories and containing 50 units or less shall install a separate meter or submeter within common areas and within each individual dwelling unit. (4.303.3)
2. Water use reduction shall be met by complying with one of the following:
   A. Provide a 20% reduction in the overall potable water use within the building. The reduction shall be based on the maximum allowable water use for plumbing fixtures and fittings as required by the Los Angeles Plumbing Code. Calculations demonstrating a 20% reduction in the building "water use baseline", as established in Table 4.303.4.1, shall be provided; or
   B. New fixtures and fittings shall comply with the maximum flow rates shown in Table 4.303.4.2, or
   C. Plumbing fixtures shall use recycled water.

   Exception: Fixture replacements (4.303.4)
3. New building on a site with 500 square feet or more of cumulative landscape area shall have separate meters or submeters for outdoor water use. (4.304.3)
4. Additions and alterations on a site with 500 square feet or more of cumulative landscape area and where the entire potable water system is replaced, shall have separate meters or submeters for outdoor water use. (4.304.3)
5. In other than single family dwellings, locks shall be installed on all publicly accessible exterior faucets and hose bibs. (4.304.4)
6. Provide a cover having a manual or power-operated reel system in any permanently installed outdoor in-ground swimming pool or spa in one- and two-family dwellings. For irregular-shaped pools where it is infeasible to cover 100% of the pool due to its irregular shape, a minimum of 80% of the pool shall be covered. (4.304.5)
7. Except as provided in this section, for sites with over 500 square feet of landscape area, alternate waste piping shall be installed to permit discharge from the clothes washer, bathtub, showers, and bathroom/restrooms wash basins to be used for a future graywater irrigation system. (4.305.1)
8. Except as provided in this section, where City-recycled water is available within 200 feet of the property line, water closets, urinals, floor drains, and process cooling and heating in the building shall be supplied from recycled water and shall be installed in accordance with the Los Angeles Plumbing Code. (4.305.2)
9. In new buildings of 25 stories or less, the cooling towers shall comply with one of the following:
   A. Shall have a minimum of 6 cycles of concentration (blowdown); or
   B. A minimum of 50% of the makeup water supply to the cooling towers shall come from non-potable water sources, including treated backwash. (4.305.3.1)
10. In new buildings over 25 stories, the cooling towers shall comply with all of the following:
    A. Shall have a minimum of 6 cycles of concentration (blowdown); and
    B. 100% of the makeup water supply to the cooling towers shall come from non-potable water sources, including treated backwash. (4.305.3.2)
11. Where groundwater is being extracted and discharged, develop and construct a system for onsite reuse of the groundwater. Alternatively, the groundwater may be discharged to the sewer. (4.305.4)
12. Provide a hot water system complying with one of the following (Los Angeles Plumbing Code Section 610.4.1):
    A. The hot water system shall not allow more than 0.6 gallons of water to be delivered to any fixture before hot water arrives.
    B. Where a hot water recirculation or electric resistance heat trace wire system is installed, the branch from the recirculating loop or electric resistance heat trace wire to the fixture shall contain a maximum of 0.6 gallons.
    C. Residential units having individual water heaters shall have a compact hot water system that meets all of the following:
       a. The hot water supply piping from the water heater to the fixtures shall take the most direct path.
       b. The total developed length of pipe from the water heater to farthest fixture shall not exceed the distances specified in Table 3.6.5 of the California Energy Code Residential Appendix.
       c. The hot water supply piping shall be installed and insulated in accordance with Section RA3.6.2 of the California Energy Code Residential Appendix.

IRRIGATION SYSTEM

12. A water budget for landscape irrigation use that conforms to the California Department of Water Resources' Model Water Efficient Landscape Ordinance (MWELO) is required for new landscape areas of 500 sq. ft. or more. The following methods to reduce potable water use in landscape areas include, but are not limited to, use of captured rainwater, recycled water, graywater, or water treated for irrigation purposes and conveyed by a water district or public entity. (4.304.1)

As a covered entity under Title II of the Americans with Disabilities Act, the City of Los Angeles does not discriminate on the basis of disability and, upon request, will provide reasonable accommodation to ensure equal access to its programs, services and activities.

LA DBS DEPARTMENT OF BUILDING AND SAFETY

Owner's Project Requirements (OPR) Compliance Form

2020 Los Angeles Green Building Code
and 2019 California Energy Code

FORM GRN 20

COMPLETE AND INCORPORATE THIS FORM INTO THE PLANS

Project Address: _____ Permit Number: _____ - _____ - _____

ITEM #	OPR ITEMS	PAGE NUMBER IN OPR DOCUMENT
	PROJECT PROGRAM	
1	General building information (size, stories, construction type, occupancy type and number)	
2	Intended uses and schedules	
3	Future expandability and flexibility of spaces	
4	Quality and/or durability of materials and desired building lifespan	
5	Budget or operation constraints	
	ENVIRONMENTAL AND SUSTAINABILITY GOALS	
6	Level of compliance with the Los Angeles Green Building Code: Mandatory, Tier 1, or Tier 2	
7	Specific environmental or sustainability goals (e.g. water efficiency, water reuse, CO_2 monitoring, xeriscaping, etc.)	
	ENERGY EFFICIENCY GOALS	
8	Overall efficiency of building: meet California Energy Code or exceed by (%)	
9	Lighting system efficiency: meet California Energy Code or exceed by (%)	
10	HVAC equipment efficiency and characteristics	
11	Other measures affecting energy efficiency desired by owner (e.g. building orientation, shading, envelope and fenestration, roof, renewable power, net-zero energy use, etc.)	
	INDOOR ENVIRONMENTAL QUALITY REQUIREMENTS	
12	Lighting	
13	Temperature and Humidity	
14	Acoustics	
15	Air quality, ventilation, and filtration	
16	Desired adjustability of system controls	
17	Accommodations for after-hours use	
18	Other owner requirements (e.g. natural ventilation, daylight, views, etc.)	

As a covered entity under Title II of the Americans with Disabilities Act, the City of Los Angeles does not discriminate on the basis of disability and, upon request, will provide reasonable accommodation to ensure equal access to its programs, services and activities.

	EQUIPMENT AND SYSTEMS EXPECTATIONS	
19	Level of quality, reliability, equipment type, flexibility, maintenance, and complexity desired	
20	Specific efficiency targets, desired technologies, or preferred manufacturers for building systems, acoustics and vibration	
21	Degree of system integration, automation, and functionality for controls (i.e. load shedding, demand response, energy management)	
	BUILDING OCCUPANT AND O&M PERSONNEL EXPECTATIONS	
22	Description of how the building will be operated and by whom	
23	Level of training and orientation required to understand, operate and use the building systems for building operation and maintenance staff, as well as occupants	
24	Building operation and maintenance staff location and capabilities	
	COMMISSIONING AGENT INFORMATION	
25	Name of Commissioning Agency:	
26	Address of Agency:	
27	Contact person(s) Name(s):	

Owner/Owner Representative Acknowledgement

Owner's Project Requirements (OPR). The expectations and requirements of the building appropriate to its phase shall be documented before the design phase of the project begins. The OPR includes the elements listed above and have been approved by the Owner or Owner Representative.

Name: _____ ☐ Owner ☐ Owner Representative

Company Name (if applicable): _____

Signature: _____ Date: _____

As a covered entity under Title II of the Americans with Disabilities Act, the City of Los Angeles does not discriminate on the basis of disability and, upon request, will provide reasonable accommodation to ensure equal access to its programs, services and activities.

LA DBS DEPARTMENT OF BUILDING AND SAFETY

Basis of Design (BOD) Compliance Form

2020 Los Angeles Green Building Code
and 2019 California Energy Code

FORM GRN 21

COMPLETE AND INCORPORATE THIS FORM INTO THE PLANS

Project Address: _____ Permit Number: _____ - _____ - _____

ITEM #	BOD ITEMS	PAGE NUMBER IN BOD DOCUMENT
	HVAC SYSTEMS AND CONTROLS	
1	Narrative description of system (i.e. system type(s), location, control type, efficiency features, outdoor air ventilation strategy, indoor air quality features, noise reduction features, environmental benefits, other features)	Page 21-24
2	Description of how the system meets requirements in OPR	Page 21
3	Reasons for system selection, as opposed to alternatives (e.g. comfort performance, efficiency, reliability, cost, acoustics, etc.)	Page 23
4	Load calculations (i.e. method/software, summer outdoor conditions, winter outdoor conditions, indoor design conditions, assumptions, other)	Page 24
5	Sequence of Operations (i.e. operating schedules, setpoints, other)	Page 24
	INDOOR LIGHTING SYSTEM	
6	Narrative Description of system (e.g. fixture type(s), lamp & ballast type, control type, etc.)	Page 32-33
7	Description of how the system meets requirements in OPR	Page 32-33
8	Reasons for system selection, as opposed to alternatives (e.g. visual comfort performance, efficiency, reliability, flexibility, simplicity, cost, etc.)	Page 32-33
9	Lighting Design Criteria (i.e. space ID, space type, illumination design target, source of target, light calculation assumptions, other)	Page 32
10	Lighting Power Design Target (i.e. space type, Title 24-Energy Code lighting power allowance, lighting power design target, other)	Page 22
	WATER HEATING SYSTEM	
11	Narrative description of system (i.e. system type, location, control type, efficiency features, environmental benefits, other)	Page 37
12	Description of how the system meets requirements in OPR	Page 37
13	Reasons for system selection, as opposed to alternatives (e.g. performance, efficiency, reliability, space constraints, cost, ease of maintenance, other)	Page 37
14	Water heating load calculations: sizing calculation method, assumptions, and results	Page 37
	LANDSCAPE IRRIGATION SYSTEMS	
15	Narrative description of system (i.e. system type(s), location, control type, performance, efficiency, water savings, other)	TBC
16	Description of how the system meets requirements in OPR	TBC
17	Reasons for system selection, as opposed to alternatives (e.g. performance, efficiency, reliability, flexibility, cost, utility company incentives, other)	TBC
18	Landscape irrigation system calculations: sizing calculation method, assumptions, and results	TBC
	COVERED PROCESSES	
19	Narrative description of system (i.e. system type(s), location, control type,	N/A

As a covered entity under Title II of the Americans with Disabilities Act, the City of Los Angeles does not discriminate on the basis of disability and, upon request, will provide reasonable accommodation to ensure equal access to its programs, services and activities.

	performance, efficiency, savings, other)	
20	Description of how the system meets requirements in OPR	N/A
21	Reasons for system selection, as opposed to alternatives (e.g. performance, efficiency, reliability, flexibility, simplicity, expandability, cost, payback period, utility company incentives, owner preference, etc.)	N/A
22	Sequence of Operation (e.g. operating schedules, setpoints, storage capacity, etc…)	N/A
	RENEWABLE ENERGY SYSTEMS (IF ANY)	
23	Narrative description of system (i.e. system type(s), location, inverter type, control type, performance, efficiency, energy savings, payback period, other)	Solar ready only.
24	Description of how the system meets requirements listed in OPR	Solar ready only.
25	Reasons for system selection, as opposed to alternatives (e.g. performance, efficiency, reliability, flexibility, simplicity, expandability, cost, payback period, etc.)	N/A
26	Renewable energy system generation calculations: sizing calculation method, assumptions, and results	N/A
	WATER REUSE SYSTEM (IF ANY)	
27	Narrative description of system (i.e. system type(s), location, space requirements, equipment requirements, control type, performance, efficiency, potable water savings, payback period, other)	N/A
28	Description of how the system meets requirements in OPR	N/A
29	Reasons for system selection, as opposed to alternatives (e.g. performance, efficiency, reliability, flexibility, simplicity, cost, payback period, etc.)	N/A
30	Water reuse system calculations: sizing calculation method, assumptions, and results	N/A

Architect/Engineer/Designer Acknowledgement

I hereby acknowledge the Basis of Design (BOD) document has been completed and meets the Owner's Project Requirements (OPR).

	Name	License Number	Signature	Date
Architect of Record				
Mechanical Designer				
Electrical Designer				
Plumbing Designer				
Landscape Architect				
Renewable Energy System Designer				
Others (specify):				

As a covered entity under Title II of the Americans with Disabilities Act, the City of Los Angeles does not discriminate on the basis of disability and, upon request, will provide reasonable accommodation to ensure equal access to its programs, services and activities.

LA DBS DEPARTMENT OF BUILDING AND SAFETY

Basis of Design (BOD) Compliance Form

2020 Los Angeles Green Building Code
and 2019 California Energy Code

FORM GRN 21

Commissioning Agent Acknowledgement

I have reviewed the Basis of Design (BOD) and verified that it meets the Owner's Project Requirements (OPR):

Name: _____

Company Name (if applicable): _____

Agent's Signature: _____ Date: _____

As a covered entity under Title II of the Americans with Disabilities Act, the City of Los Angeles does not discriminate on the basis of disability and, upon request, will provide reasonable accommodation to ensure equal access to its programs, services and activities.

LA DBS DEPARTMENT OF BUILDING AND SAFETY

Commissioning Measures In Construction Documents

2020 Los Angeles Green Building Code
and 2019 California Energy Code

FORM GRN 22

COMPLETE AND INCORPORATE THIS FORM INTO THE PLANS

Project Address: _____ Permit Number: _____ - _____ - _____

ITEM #	Commissioning Measures Items
1	Measures shown in the specifications and cross referenced
2	List of commissioned equipment and systems
3	Cx roles and responsibilities of all parties
4	Meeting requirements
5	Commissioning schedule management procedures
6	Procedures for addressing outstanding issues or non-compliance
7	Requirements for execution and documentation of installation and equipment start up
8	Specific testing requirements for each system type
9	Submittal review and approval requirements
10	Contents and approval process of the commissioning plan
11	Cx documentation and reporting requirements
12	Facility staff training requirements and verification procedures
13	O & M manual review and approval procedures
14	Systems manual development and approval procedures
15	Definitions

Commissioning Agent Acknowledgment

I have reviewed the applicable construction documents listed above and verified their compliance with the owner's project requirements, basis of design, and commissioning plan.

Name: _____

Company Name (if applicable): _____

Agent's signature: _____ Date: _____

As a covered entity under Title II of the Americans with Disabilities Act, the City of Los Angeles does not discriminate on the basis of disability and, upon request, will provide reasonable accommodation to ensure equal access to its programs, services and activities.

NOT FOR CONSTRUCTION

17.NOV.2021
100% DESIGN SUBMITTAL

belzberg architects
2740 MAIN STREET
SANTA MONICA, CA 90405
310.453.9611
www.belzbergarchitects.com

#	DESCRIPTION	DATE

HOLOCAUST MUSEUM LA EXPANSION

100 THE GROVE DRIVE
LOS ANGELES, CA 90036

GREEN BUILDING FORMS

PROJECT NUMBER: 17009

G021

11/18/2021 3:09:17 PM

Commissioning Plan Compliance Form

2020 Los Angeles Green Building Code
and 2019 California Energy Code

FORM GRN 23

COMPLETE AND INCORPORATE THIS FORM INTO THE PLANS

Project Address: _____ Permit Number: _____ - _____ - _____

ITEM #	COMMISSIONING PLAN ITEMS	PAGE NUMBER IN COMMISSIONING PLAN DOCUMENT
	GENERAL PROJECT INFORMATION	
1	Project name, owner, location, building type and building area	
2	Definitions	
3	Overall project commissioning schedule	
4	Contact information for individual/company providing commissioning services	
	COMMISSIONING GOALS	
5	Meeting the Los Angeles Green Building code and California Energy Code requirements for commissioning	
6	Meeting OPR and BOD requirements	
7	Carrying out requirements for commissioning activities as specified in plans and specifications	
	SYSTEMS TO BE COMMISSIONED	
8	Explanation of the original design intent (refer to OPR and BOD documents)	
9	Requirements for execution and documentation of installation, checkout and start up, including controls point-to-point checks and calibrations	
10	Equipment and systems to be tested*, functions and modes to be tested, conditions under which the test shall be performed, measurable criteria for acceptable performance, and example test forms	
	COMMISSIONING TEAM INFORMATION	
11	List of all team members and contact information (i.e. owner, owner's representative, architect, engineers, designated commissioning representative, and (if available): general contractor, sub-contractors, vendors, and construction manager)	
	COMMISSIONING PROCESS ACTIVITIES, SCHEDULES, AND RESPONSIBILITIES	
12	Prescribed commissioning process steps and activities to be accomplished by the Cx team throughout the design to occupancy	
13	Roles and responsibilities for each member of the Cx team for each phase of the work (including who writes checklists and tests, who reviews and approves test forms, who directs tests, who executes tests, who documents tests results and who approves completed tests)	
14	Required Cx deliverables, reports, forms, and verifications expected at each stage of the commissioning effort	

As a covered entity under Title II of the Americans with Disabilities Act, the City of Los Angeles does not discriminate on the basis of disability and, upon request, will provide reasonable accommodation to ensure equal access to its programs, services and activities.

15	Confirmation, development and approval process for the O&M manual, systems manual and the facility operator and maintenance staff training	

**At a minimum, the following systems shall be tested: HVAC & controls, indoor lighting system & controls, water heating system, landscape irrigation systems, covered processes, renewable energy systems, and water reuse systems.*

Owner/Owner Representative Acknowledgement

The commissioning plan includes the items listed above and have been approved by the Owner or Owner Representative:

Name: _____ ☐ Owner ☐ Owner Representative

Company Name (if applicable): _____

Signature: _____ Date: _____

As a covered entity under Title II of the Americans with Disabilities Act, the City of Los Angeles does not discriminate on the basis of disability and, upon request, will provide reasonable accommodation to ensure equal access to its programs, services and activities.

NOT FOR CONSTRUCTION

17.NOV.2021
100% DESIGN SUBMITTAL

belzberg architects
2740 MAIN STREET
SANTA MONICA, CA 90405
310.453.9611
www.belzbergarchitects.com

#	DESCRIPTION	DATE

HOLOCAUST MUSEUM LA EXPANSION

100 THE GROVE DRIVE
LOS ANGELES, CA 90036

GREEN BUILDING FORMS

PROJECT NUMBER: 17009

G022

11/18/2021 3:09:17 PM

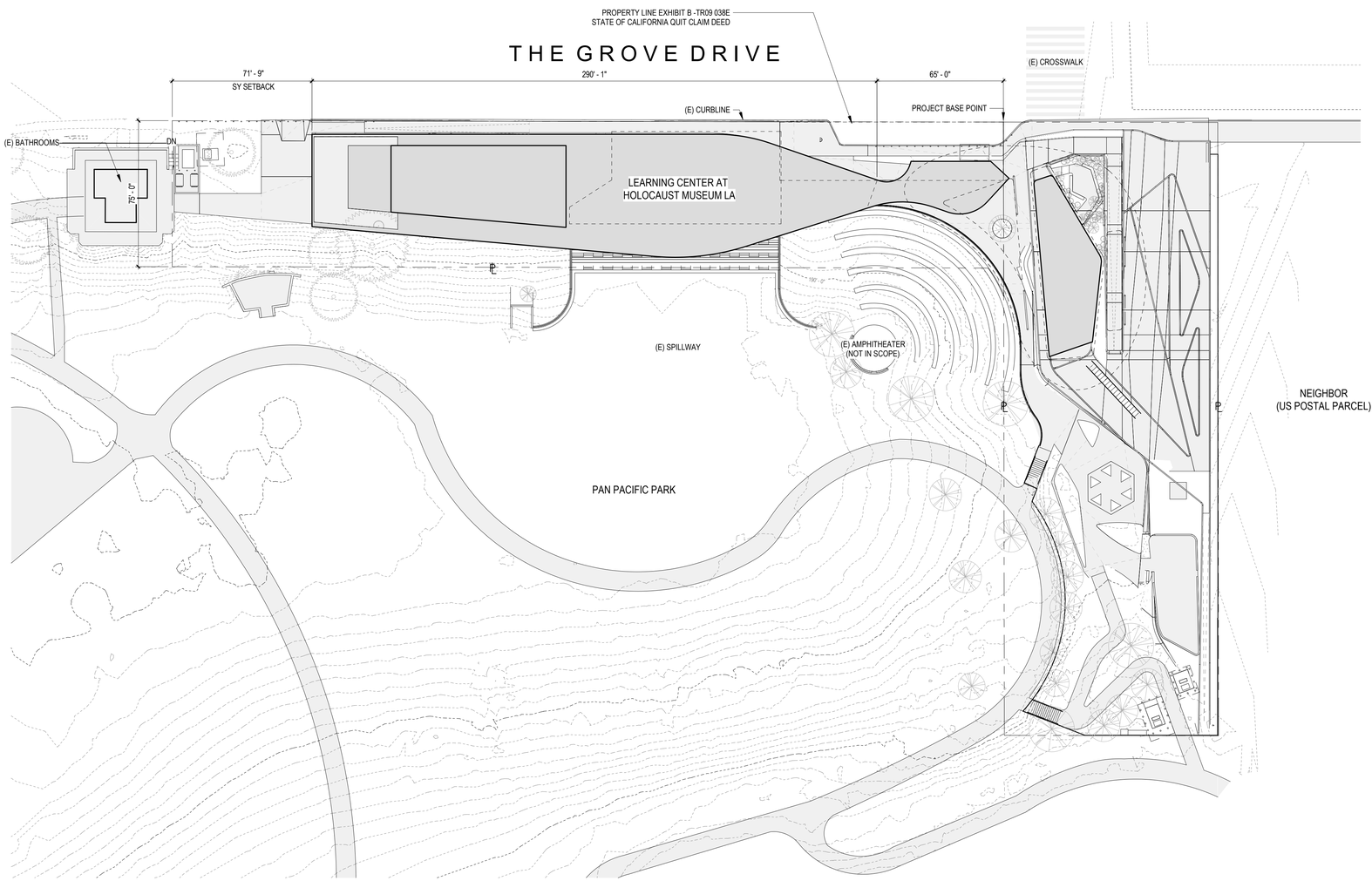

PLOT PLAN 1
SCALE: 1/32" = 1'-0"
NORTH

VICINITY MAP

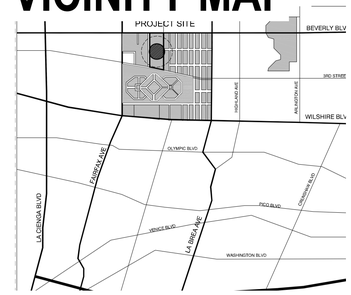

100 THE GROVE DRIVE, LOS ANGELES, CA 90036

PROJECT DESCRIPTION:
PERMIT APPLICATION #200014-10000-05704
NEW ROOF CANOPY AND ADDITION/REMODEL OF EXISTING TYPE II-A CONSTRUCTION

PROPERTY INFORMATION:

APN	5512004905 / 5512004909
LEGAL DESCRIPTION	BLOCK / LOT - NONE RANCHO LA BREA TRACT
CURRENT ZONING	OS-1XL-O
CURRENT LAND USE DESIGNATION	OPEN SPACE
COMMUNITY PLAN	WILSHIRE
SPECIFIC PLAN	CENTRAL
SUBAREA	MID CITY WEST
COUNCIL DISTRICT	CD 4 - NITHYA RAMAN
EXISTING LOT AREA	36,189 SF
NEW PARCEL AREA	35,625 SF
GROSS LOT AREA	**71,814 SF**
FAR ALLOWED	XX
BUILDING AREA ALLOWED (FAR)	XX
FAR PROPOSED	**XX**
EXISTING MUSEUM (GROSS)	13,157 SF
PROPOSED ADDITION (GROSS)	2,061 SF
PROPOSED CANOPY (GROSS)	2,647 SF
PROPOSED BUILDING (GROSS)	14,163 SF

** SEE SHEET G030 FOR DETAILED FLOOR AREA CALCULATIONS*

PROJECT INFORMATION:

HEIGHT ALLOWED (W/VARIED ROOFLINE)	NONE
HEIGHT PROPOSED	**40'-0"**
STORIES ALLOWED	NOT SPECIFIED
STORIES PROPOSED	**1**

NEW ROOF CANOPY

SETBACKS	FRONT		SIDE	REAR
REQUIRED	NONE		NONE	NONE
PROVIDED	**6'-3**		**6'-3" / 119'-5"**	**6'-9"**
SOURCE	SPECIFIC PLAN	LAMC	LAMC	

ADDITION/REMODEL

SETBACKS	FRONT		SIDE	REAR
REQUIRED	NONE		NONE	NONE
PROVIDED	**XX**		**XX**	**XX**
SOURCE	SPECIFIC PLAN	LAMC	LAMC	

OPEN SPACE

REQUIRED	0 SF
PROVIDED (COMMON)	**1486 SF** OUTDOOR DECK

PARKING:

REQUIRED	104 SPACES
PROVIDED	104 SPACES (28 ON SITE)

NOT FOR CONSTRUCTION

17.NOV.2021
100% DESIGN SUBMITTAL

ba
belzberg architects
2740 MAIN STREET
SANTA MONICA, CA 90405
310.453.9611
www.belzbergarchitects.com

#	DESCRIPTION	DATE

HOLOCAUST MUSEUM LA EXPANSION

100 THE GROVE DRIVE
LOS ANGELES, CA 90036

PLOT PLAN / SITE INFORMATION

PROJECT NUMBER: 17009

G030

11/19/2021 1:34:09 PM

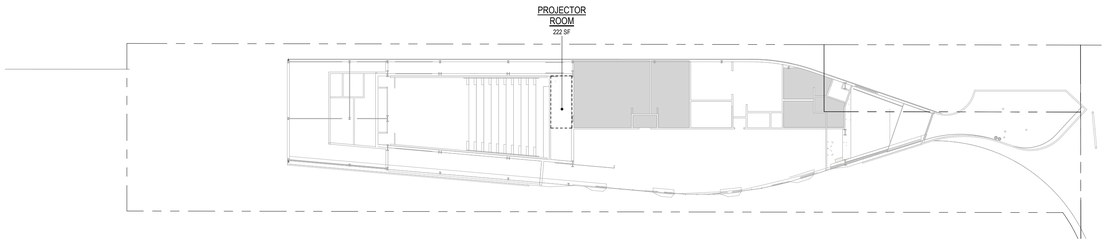

02 MEZZANINE 5
SCALE: 1/32" = 1'-0"

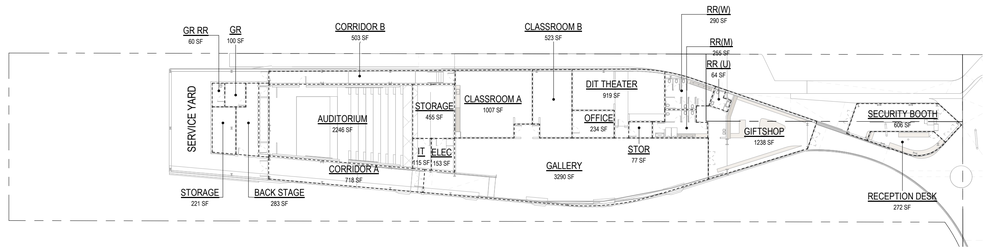

01 GALLERY 4
SCALE: 1/32" = 1'-0"

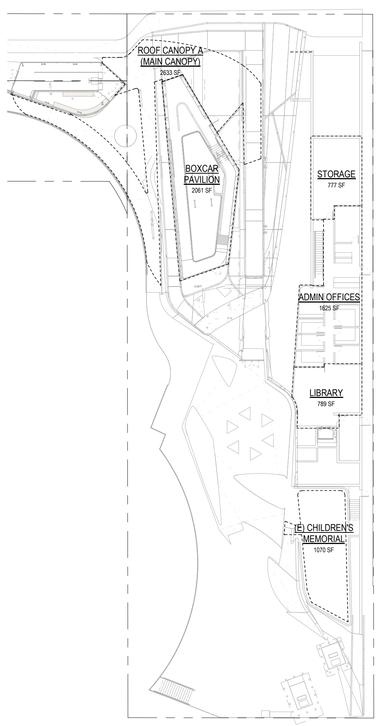

EX02 2
SCALE: 1/32" = 1'-0"

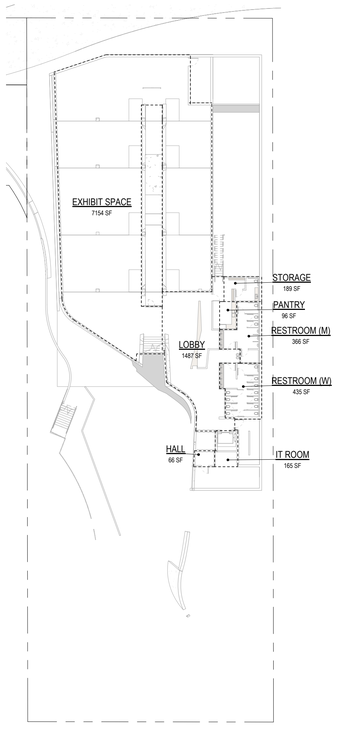

EX01 1
SCALE: 1/32" = 1'-0"
NORTH

AREA SCHEDULE / FAR CALCULATION EXISTING		
LEVEL	NAME	AREA
EX01	EXHIBIT SPACE	7154 SF
EX01	STORAGE	189 SF
EX01	PANTRY	96 SF
EX01	RESTROOM (M)	366 SF
EX01	RESTROOM (W)	435 SF
EX01	IT ROOM	165 SF
EX01	HALL	66 SF
EX01	LOBBY	1487 SF
		9958 SF
EX02	STORAGE	777 SF
EX02	ADMIN OFFICES	1625 SF
EX02	LIBRARY	789 SF
		3191 SF
GRAND TOTAL		13149 SF

AREA SCHEDULE / FAR CALCULATION ADDITION		
LEVEL	NAME	AREA
EX02	BOXCAR PAVILION	2061 SF
GRAND TOTAL		2061 SF

AREA SCHEDULE / FAR CALCULATION NEW		
LEVEL	NAME	AREA
01 GALLERY	SECURITY BOOTH	606 SF
01 GALLERY	GALLERY	3290 SF
01 GALLERY	CLASSROOM A	1007 SF
01 GALLERY	CLASSROOM B	523 SF
01 GALLERY	DIT THEATER	919 SF
01 GALLERY	OFFICE	234 SF
01 GALLERY	STOR	77 SF
01 GALLERY	RR(M)	255 SF
01 GALLERY	RR(W)	290 SF
01 GALLERY	GIFTSHOP	1238 SF
01 GALLERY	STORAGE	455 SF
01 GALLERY	GR	100 SF
01 GALLERY	GR RR	60 SF
01 GALLERY	CORRIDOR B	503 SF
01 GALLERY	CORRIDOR A	718 SF
01 GALLERY	RECEPTION DESK	272 SF
01 GALLERY	AUDITORIUM	2246 SF
01 GALLERY	STORAGE	221 SF
01 GALLERY	BACK STAGE	283 SF
01 GALLERY	ELEC	153 SF
01 GALLERY	IT	115 SF
01 GALLERY	RR (U)	64 SF
02 MEZZANINE	PROJECTOR ROOM	222 SF
~~GRAND TOTAL~~		~~13848 SF~~

AREA SCHEDULE / FAR CALCULATION CANOPY A		
LEVEL	NAME	AREA
EX02	ROOF CANOPY A (MAIN CANOPY)	2633 SF
		2633 SF
GRAND TOTAL		2633 SF

FLOOR AREA SUMMARY:

EXISTING LOT SIZE:	36,189 SF
NEW PARCEL:	35,625 SF
TOTAL LOT SIZE:	71,813 SF
TOTAL (FROM ABOVE):	33,317 SF
PROPOSED F.A.R.:	0.46

NOT FOR CONSTRUCTION

17.NOV.2021
100% DESIGN SUBMITTAL

ba
belzberg architects
2740 MAIN STREET
SANTA MONICA, CA 90405
310.453.9611
www.belzbergarchitects.com

#	DESCRIPTION	DATE

HOLOCAUST MUSEUM LA EXPANSION

100 THE GROVE DRIVE
LOS ANGELES, CA 90036

FLOOR AREA PLANS

PROJECT NUMBER: 17009

G040

11/19/2021 3:10:04 PM

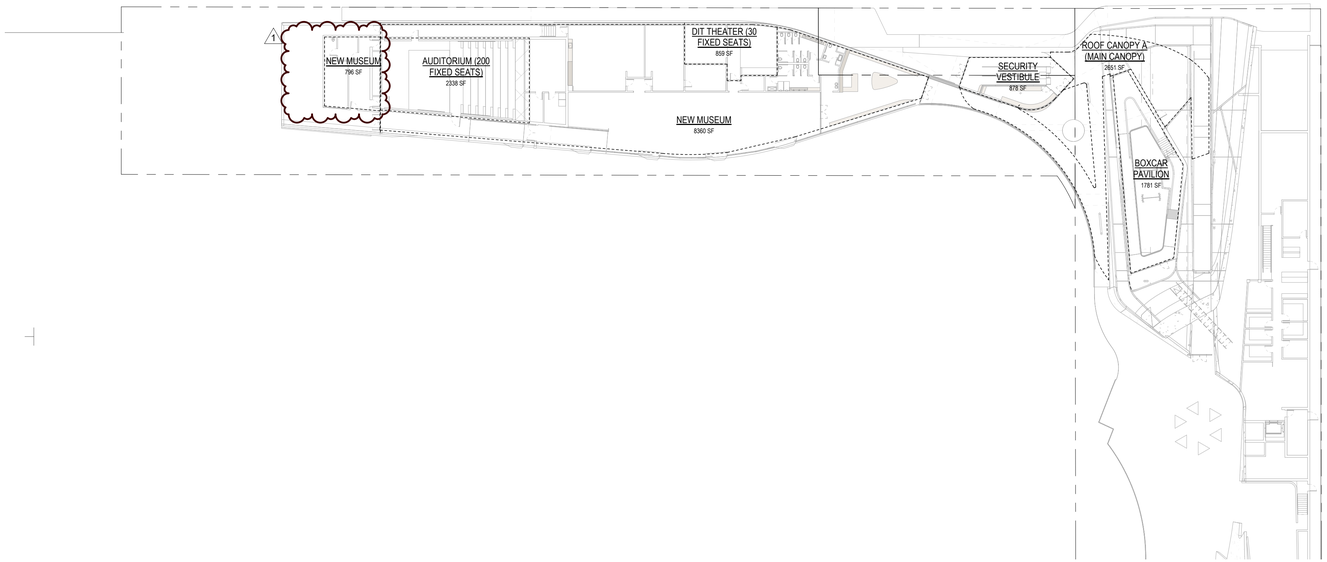

01 GALLERY FLOOR AREA 4
SCALE: 1/32" = 1'-0"
NORTH

AREA SCHEDULE (PARKING)						
SORT	NAME	AREA	SF PER CAR	NOTES	PARKING REQ.	PARKING PROPOSED
EXISTING	EXISTING MUSEUM	9966 SF	500 SF		19.93	20
EXISTING	EXISTING OFFICE	3191 SF	500 SF		6.38	6
		13157 SF				26
ADDITION	BOXCAR PAVILION	1781 SF	500 SF		3.56	4
		1781 SF				4
NEW	AUDITORIUM (200 FIXED SEATS)	2338 SF	0 SF	1 PER 5 FIXED SEATS		40
NEW	DIT THEATER (30 FIXED SEATS)	859 SF	0 SF	1 PER 5 FIXED SEATS		6
NEW	NEW MUSEUM	8360 SF	500 SF		16.72	17
NEW	NEW MUSEUM	796 SF	500 SF		1.59	2
NEW	PROJECTOR ROOM	246 SF	500 SF		0.49	1
NEW	SECURITY VESTIBULE	878 SF	500 SF		1.76	2
		13477 SF				68
ROOF CANOPY	ROOF CANOPY A (MAIN CANOPY)	2651 SF	500 SF		5.30	5
		2651 SF				5
TOTAL PARKING PROVIDED		31067 SF				103

*NOTE: ALL PARKING FOR NEW SQUARE FOOTAGE TO BE PROVIDED OFFSITE.
EXISTING MUSEUM PROVIDES 28 SPACES, THEREFORE 75 SPACES MIN REQUIRED OFFSITE.
SEE G046 G047 FOR AGREEMENT FOR OFFSITE PARKING

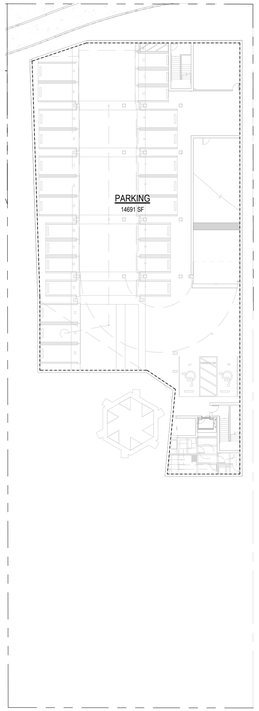

EX00 FLOOR AREA 3
SCALE: 1/32" = 1'-0"
NORTH

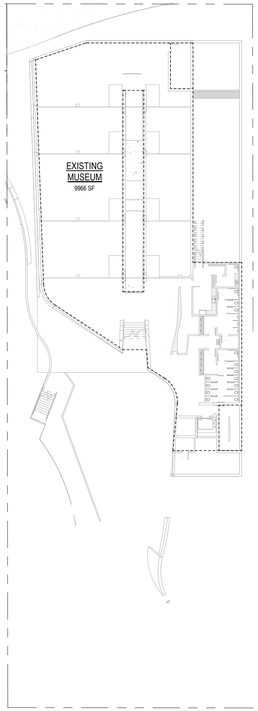

EX01 FLOOR AREA 2
SCALE: 1/32" = 1'-0"
NORTH

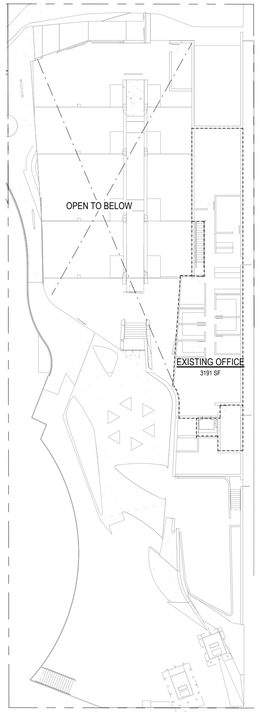

EX02 FLOOR AREA 1
SCALE: 1/32" = 1'-0"
NORTH

NOT FOR CONSTRUCTION

17.NOV.2021
100% DESIGN SUBMITTAL

ba
belzberg architects
2740 MAIN STREET
SANTA MONICA, CA 90405
310.453.9611
www.belzbergarchitects.com

#	DESCRIPTION	DATE
1	P.C. VERIF 1	12/10/2021

HOLOCAUST MUSEUM LA EXPANSION

100 THE GROVE DRIVE
LOS ANGELES, CA 90036

PARKING AREA PLANS

PROJECT NUMBER: 17009

G045

11/18/2021 3:10:11 PM

DocuSign Envelope ID: 3D171C33-16A3-4D75-9129-9DAE9AEF4379

LICENSE AGREEMENT
Los Angeles Museum of the Holocaust (The Grove)

This License Agreement (this "**Agreement**") is made as of May 27, 2021, by and between The Grove, LLC, a Delaware limited liability company registered to do business in California as GFM, LLC ("**Licensor**"), and Holocaust Museum LA ("**Licensee**"), with respect to the following facts:

A. Licensor owns a ground lease interest in and operates the retail shopping center known as "The Grove" located in Los Angeles, California (the "**Center**").

B. Licensee operates the Holocaust Museum adjacent to the Center. Licensee desires to utilize a portion of the Center, consisting of the Licensed Area (as defined below) and depicted on **Exhibit "A"** attached hereto, for the parking of vehicles of guests of the Holocaust Museum; and

C. Licensor is willing to grant Licensee a temporary license to use the Licensed Area for such purpose, subject to the terms and provisions of this Agreement and the Rules of Operation set forth in **Exhibit "B"** attached hereto.

NOW, THEREFORE, in consideration of the foregoing recitals and other good and valuable consideration, the receipt and adequacy of which is hereby acknowledged, Licensor and Licensee hereby agree as follows:

1. **Basic Terms.** The following terms shall have the following meanings throughout this Agreement:

A. **CENTER:**	The Grove
B. **LICENSOR:**	The Grove, LLC, a Delaware limited liability company registered to do business in California as GFM, LLC
Licensor's Notice Address:	101 The Grove Dr., Los Angeles, CA, 90036
Management Contact:	Richard Lynch
Phone Number:	(323) 900-8000
C. **LICENSEE:**	Holocaust Museum LA
Licensee's Notice Address:	100 The Grove Drive Los Angeles, CA 90036
Management Contact:	Beth Kean, CEO
Phone Number	(323) 651-3322/310-922-6108

DocuSign Envelope ID: 3D171C33-16A3-4D75-9129-9DAE9AEF4379

35. **California Certified Access Specialist Inspection**. Pursuant to California Civil Code §1938, Licensor hereby states that the Licensed Area has not undergone inspection by a Certified Access Specialist (CASp) (defined in California Civil Code §55.52(a)(3)). Pursuant to Section 1938 of the California Civil Code, Licensor hereby provides the following notification to Licensee: "A Certified Access Specialist (CASp) can inspect the subject premises and determine whether the subject premises comply with all of the applicable construction-related accessibility standards under state law. Although state law does not require a CASp inspection of the subject premises, the commercial property owner or lessor may not prohibit the lessee or tenant from obtaining a CASp inspection of the subject premises for the occupancy or potential occupancy of the lessee or tenant, if requested by the lessee or tenant. The parties shall mutually agree on the arrangements for the time and manner of the CASp inspection, the payment of the fee for the CASp inspection, and the cost of making any repairs necessary to correct violations of construction related accessibility standards within the premises." If Licensee requests to perform a CASp inspection of the Licensed Area, Licensee shall, at its cost, retain a CASp approved by Licensor (provided that Licensor may designate the CASp, at Licensor's option) to perform the inspection of the Licensed Area at a time agreed upon by the parties. Licensee shall provide Licensor with a copy of any report or certificate issued by the CASp (the "**CASp Report**"). Licensee agrees to keep the information in the CASp Report confidential except as necessary for the Licensee to complete any modifications. The foregoing notwithstanding, Licensor represents that as of the date hereof, it has not received written notice that the Licensed Area requires changes or modifications in accordance with the foregoing provisions and in the event that it does so require, Licensee shall have the right to terminate this License, without liability and with the return of any unused portion of the License Fee from Licensor.

[*The signatures are on the following page.*]

DocuSign Envelope ID: 3D171C33-16A3-4D75-9129-9DAE9AEF4379

IN WITNESS WHEREOF, the parties have executed this Agreement as of the day and year first written above.

LICENSOR:

The Grove, LLC, a Delaware limited liability company, registered to do business in California as GFM, LLC

By: Caruso Management Company, Ltd., a California limited partnership
Its: Managing Agent

DocuSigned by:
By: Richard Lynch
6B8B9BC07B1C4B8...
Name: Richard Lynch
Its: Property Manager

7/15/2021

LICENSEE:

Holocaust Museum LA

DocuSigned by:
By: Beth Kean
CEO 4C357EA71C040C...
Its:

7/15/2021

Beth Kean

DocuSign Envelope ID: 3D171C33-16A3-4D75-9129-9DAE9AEF4379

termination of this Agreement (whether pursuant to Licensor's election to terminate this Agreement or otherwise.

25. **Limitation of Liability.** In no event will Licensor, its shareholders, members, managers, limited partners, general partners, directors, officers, employees, agents, attorneys, successors or assigns of Licensor or any Affiliate of Licensor (the "**Licensor Parties**") be liable to Licensee for consequential, incidental, indirect, punitive or special damages, or loss of profits, business or goodwill, regardless of whether such liability is based on breach of contract, tort, strict liability, or otherwise, and even if advised of the likelihood of such damages. Anything in this Agreement and Paragraph 24 to the contrary notwithstanding, Licensee agrees that Licensor's maximum exposure and legal liability to Licensee hereunder for any breach by Licensor or any Licensor Parties of any covenant, representation, warranty or indemnification hereunder shall be limited to One Million Dollars ($1,000,000) in excess of the insurance coverage maintained by Licensor on the Center, and no other assets of Licensor or Licensor Parties shall be subject to levy, execution or other procedures for the satisfaction of Licensee's remedies.

Licensor acknowledges that Licensee is a non-profit entity. In no event will Licensee, its shareholders, members, managers, limited partners, guests, visitors, invitees, directors, officers, employees, agents, attorneys, successors or assigns of Licensee or any Affiliate of Licensee (the "**Licensee Parties**") be liable to Licensor for consequential, incidental, indirect, punitive or special damages, or loss of profits, business or goodwill, regardless of whether such liability is based on breach of contract, tort, strict liability, or otherwise, and even if advised of the likelihood of such damages. Anything in this Agreement and Paragraph 24 to the contrary notwithstanding, Licensor agrees that Licensee's maximum exposure and legal liability to Licensor hereunder for any breach by Licensee or any Licensee Parties of any covenant, representation, warranty or indemnification hereunder shall be limited to five hundred thousand dollars ($500,000), and no assets of Licensee or Licensee Parties shall be subject to levy, execution or other procedures for the satisfaction of Licensor's remedies.

26. **Nondiscrimination Covenant**. Licensee covenants by and for itself and its successors and assigns, and all persons claiming under or through Licensee and this Agreement is made and accepted upon and subject to the following conditions:

> "There shall be no discrimination against or segregation of any person or group of persons on account of race, color, creed, religion, sex, marital status, physical or mental disability or medical condition, handicap, ancestry or national origin in the leasing, subleasing, transferring, use, occupancy, tenure or enjoyment of the Licensed Area herein leased nor shall the Licensee or any person claiming under or through the Licensee, establish or permit any such practice or practices of discrimination or segregation with reference to the selection, location, number, use or occupancy of tenants, lessees, sublessees, subtenants or vendees in the Licensed Area herein leased."

27. **Rules and Regulations.** Licensee agrees to comply with (and cause its officers, employees, contractors, invitees and all others doing business with Licensee, to comply with) all rules and regulations of general applicability regarding the Center as may be established by Licensor at any time and from time to time during the Term, including without limitation rules

n Envelope ID: 3D171C33-16A3-4D75-9129-9DAE9AEF4379

Exhibit "A"

SITE PLAN – 7th Level

DocuSign Envelope ID: 3D171C33-16A3-4D75-9129-9DAE9AEF4379

and regulations pertaining to signs. See **Exhibit "B"** attached for detailed operations rules. Notwithstanding anything to the contrary in this Agreement, in the event of a conflict between the terms of this Agreement and any rules, the terms of this Agreement shall govern.

28. **Notice.** Notices and demands required or permitted to be given hereunder shall be in writing given by personal delivery or be sent by certified mail, return receipt requested, addressed if to Licensor, at the address listed in Paragraph 1C above, or such other address as Licensor may designate by notice to Licensee from time to time, and, if to Licensee, at 100 The Grove Drive, Los Angeles, CA 90036, Attn: Beth Kean, or such other address as Licensee may designate by notice to Licensor from time to time. Notices and demands shall be deemed to have been given when mailed or, if made by personal delivery, then upon such delivery.

29. **Force Majeure/Cancellation.** If either party is prevented from fulfilling its obligations hereunder due to an act of God, extreme weather conditions, state of war, acts of terrorism, strikes, boycotts or other labor troubles, government control, government or public service shutdown, pandemic, epidemic and coronavirus/COVID-19 and any other public health emergencies in any form and prevention and control measures with respect to these public health emergencies, or any other reason beyond the control of the parties, then such party shall not be deemed to have breached this Agreement, provided the party claiming force majeure promptly notifies the other party of the force majeure, the anticipated duration of the force majeure, and the steps being taken to remedy the failure. If any force majeure event results in a partial or full closure of the Licensed Area or the Center or the inability to open the Licensed Area or Center by the Commencement Date, Licensee shall be entitled to reschedule the Event at a mutually agreeable time either at the Licensed Premises or at a reasonably equivalent alternative space, within the following twelve (12) months.

30. **Compliance with Laws**. Licensee agrees that the Permitted Use shall be conducted in compliance with all laws, ordinances, orders, rules, regulations and requirements of all Federal, State and Municipal governments and appropriate departments, boards and officers thereof, and of the insurance organization having jurisdiction thereof. Licensor agrees that it operates the Licensed Area in compliance with all laws, ordinances, orders, rules, regulations and requirements of all Federal, State and Municipal governments and appropriate departments, boards and officers thereof, and of the insurance organization having jurisdiction thereof.

31. **Choice of Law; Severability; Time of the Essence**. This Agreement is entered into and shall be construed in accordance with and governed by the laws of the State of California. Any and all disputes related to or arising out of this Agreement shall be venued in and adjudicated by the California Courts located in Los Angeles. If any provision of the Agreement or application thereof shall be deemed to be invalid, the remainder of the Agreement shall not be affected thereby, and if possible, a valid and enforceable clause carrying out the same purpose shall be inserted in its place. Each provision of the Agreement shall be valid and enforceable to the fullest extent permitted by law. The Agreement can only be modified by a writing executed by Licensor and Licensee. Time is of the essence with respect to each Term of the Agreement.

32. **Confidentiality**. Licensor and Licensee agree that the terms of this Agreement are confidential and constitute proprietary information of the parties hereto. Disclosure of the

Exhibit "B"

RULES AND REGULATIONS

1. [omitted];

2. [omitted];

3. [omitted];

4. [omitted];

5. [omitted];

6. [omitted];

7. Refrain from burning any papers or refuse of any kind at the Center;

8. [omitted];

9. Not use the Licensed Area or any part thereof in any manner that will constitute a nuisance or unreasonable annoyance to the public, to other occupants of the Center or to Licensor, or for any hazardous purpose or in any manner that will impair the structural strength of the building.

10. [omitted].

11. Licensee shall not mark, drive nails, screw or drill into, paint or in any way deface the exterior surface of exterior walls, roof, foundations, bearing walls or pillars without the prior written consent of Licensor. The actual, reasonable and documented out-of-pocket expense of repairing any breakage, stoppage or damage resulting from a violation of this rule shall be borne by Licensee. No boring or cutting for wires shall be allowed, except with the consent of Licensor.

12. No awning or shade shall be affixed or installed over or in the show windows or the exterior of the Licensed Area, except with the prior written consent of Licensor, and unless it be of such color, size and style and in such place upon the Licensed Area as may be designated by Licensor. If Licensee desires window drop curtains in the show windows of the Licensed Area, the same must be of such uniform shape, color, material and make as may be prescribed by Licensor and must be put up as directed by Licensor, and paid for by Licensee.

13. Licensee shall not use any machinery (other than parking vehicles) within the Licensed Area, even though its installation may have been permitted, which may cause any unreasonable noise or jar, or tremor to the floors or walls, or which by its weight might injure the floors of the Licensed Area.

14. Except for vehicles, no machinery of any kind will be allowed in the Licensed Area without the written consent of Licensor.

DocuSign Envelope ID: 3D171C33-16A3-4D75-9129-9DAE9AEF4379

terms hereof could adversely affect the ability of Licensor to negotiate with other licensees of the Center. Each of the parties hereto agrees that such party, and its respective partners, officers, directors, employees, agents and attorneys, shall not disclose the terms and conditions of this Agreement to any other person without the prior written consent of the other party hereto except pursuant to an order of a court of competent jurisdiction. Notwithstanding the foregoing, (i) Licensor may disclose the terms hereof to its insurance broker for purposes of insuring the Licensed Area, any lender (prospective or existing now or hereafter having a lien on Licensor's interest in the Center), or any potential purchaser of Licensor's interest in the Center, and (ii) Licensee may disclose the terms hereof to its insurance broker for purposes of insuring the Licensed Area, and to its consultants, attorneys and applicable representatives of the City of Los Angeles involved in Licensee's remodeling project and as otherwise necessary in connection with its remodeling project; furthermore, the terms hereof will be disclosed to Licensee's guests, visitors and invitees who will be receiving the stickers for the day parking rate. Either party may disclose the terms hereof to its respective independent accountants who review its respective financial statements or prepare its respective tax returns, to any prospective transferee of all or any portion of their respective interests hereunder (including a prospective sublessee or assignee of Licensee), to any governmental entity, agency or person to whom disclosure is required by applicable law, regulation or duty of diligent inquiry and in connection with any action brought to enforce the terms of this Agreement, on account of the breach or alleged breach hereof or to seek a judicial determination of the rights or obligations of the parties hereunder and to risk management consultants.

33. **Time of the Essence; Nonwaiver**. Time is of the essence of each and every provision of this Agreement. The waiver by Licensor in any instance of any term, covenant or condition herein contained shall not be deemed to be a waiver of such term, covenant or condition in any other instance and shall not be deemed a waiver of Licensor's rights and remedies with respect to any subsequent breach of the same or any other term, covenant or condition herein contained. The subsequent acceptance of Base License Fee, Percentage License Fee or other fees or any other sum hereunder by Licensor shall not be deemed to be a waiver of any preceding default by Licensee of any term, covenant or condition of this Agreement regardless of Licensor's knowledge of such preceding default at the time of the acceptance of such sum. In the event of litigation or other legal proceedings between Licensor and License, the non-prevailing party shall reimburse the prevailing party for the prevailing party's reasonable attorneys' fees.

34. **Miscellaneous**. This Agreement constitutes the entire agreement of the parties and shall not be modified except in a writing signed by the parties hereto. The headings in this Agreement are inserted for convenience only and in no way are intended to describe, interpret, define or limit the scope, extent or intent of this Agreement or any provision hereof. This Agreement may be executed in counterparts, each of which shall be deemed an original but all of which shall constitute one and the same instrument. A faxed or electronic copy with faxed or electronic signatures of this Agreement shall be deemed to be an original and binding on the parties hereto. The parties signing and delivering this Agreement in the manner described in the previous sentence shall endeavor to forward signed originals by hand, mail or overnight commercial delivery service to the other, but failure to do so shall not affect the validity hereof.

15. Licensee's agents and employees while working at the Licensed Area shall not interfere in any way with other Licensees or patrons of the Center, nor bring into nor keep within the boundaries of the Center any animal or bird, or any bicycle or other vehicle, except such vehicles as are permitted to park in the parking area, and shall park in the areas designated from time to time for employee parking generally. Notwithstanding the foregoing to the contrary, Licensee's agents and employees may bring into and keep within the boundaries of the Center any bicycle provided that it is kept at a bicycle rail or within the non-sales area of the Licensed Area. Licensee's agents and employees while working at the Licensed Area shall not throw cigar or cigarette butts or other substances or litter of any kind in or about the Center, except in receptacles placed therein for such purposes by Licensor or governmental authorities.

16. All freight must be moved into, within and out of the Licensed Area only during such hours as may be prescribed by applicable governmental rules, regulations and ordinances, and according to such rules as may be promulgated from time to time by Licensor, which rules shall be subject to the reasonable approval of Licensee. Notwithstanding anything in this Agreement to the contrary, Fed Ex, UPS and similar type deliveries may be made to the rear door of the Licensed Area during regular business hours of the Center and may be made to the front door of the Licensed Area during non business hours of the Center.

17. No waiver of any rule or regulation by Licensor shall be effective unless expressed in writing and signed by Licensor.

18. Licensor reserves the right to exclude or expel from the Center any person who, in the reasonable judgment of Licensor, is intoxicated or under the influence of liquor or drugs.

19. During emergency conditions, and after normal business hours, Licensor reserves the right to close and keep locked any and all entrances and exit doors of the Center and gates or doors closing the parking areas.

20. Licensor reserves the right at any time to change or rescind any one or more of these rules or regulations or to make such other and further reasonable rules and regulations as in Licensor's judgment may from time to time be necessary for the management, safety, care and cleanliness of the Licensed Area and Center, and for the preservation of good order therein, as well as for the convenience of occupants, Licensees and patrons of the Center. Licensor shall use reasonable efforts to enforce these rules and regulations against all Licensees, provided, however, Licensor shall not be responsible to Licensee or to any other person for the non-observance or violation of the rules and regulations by any other Licensee or other person. Licensee shall be deemed to have read these rules and to have agreed to abide by them as a condition to its occupancy of the Licensed Area.

21. Licensee shall abide by any additional rules or regulations which are ordered or requested by any governmental or military authority.

NOT FOR CONSTRUCTION

10.DEC.2021
100% DESIGN SUBMITTAL

ba
belzberg architects
2740 MAIN STREET
SANTA MONICA, CA 90405
310.453.9611
www.belzbergarchitects.com

#	DESCRIPTION	DATE
1	P.C. VERIF 1	12/10/2021

HOLOCAUST MUSEUM LA EXPANSION

100 THE GROVE DRIVE
LOS ANGELES, CA 90036

PARKING AGREEMENT

PROJECT NUMBER: 17009

1

G046

12/10/2021 10:21:22 AM

DocuSign Envelope ID: 3D171C33-16A3-4D75-9129-9DAE9AEF4379

D. **LICENSEE'S TRADE NAME:** Holocaust Museum LA

E. **LICENSED AREA:** Space "R7" at The Grove, which consists of seventy five (75) parking spaces within the Center's parking structure ("The Grove Parking Structure"), and is approximately 13,500 square feet and is in the approximate location designated on **Exhibit "A"** attached hereto.

F. **TERM:** The term of this Agreement (the "Term") shall commence on June 1, 2021, (the "**Commencement Date**"), and shall expire when Licensee's remodeling project is substantially complete, unless sooner terminated pursuant to the terms of this Agreement (the "**Termination Date**").

G. **PERMITTED USE:** For the use of 75 parking spaces for guests of the Holocaust Museum and for no other use or purpose. While guests have access to 75 parking spaces, Licensor is not responsible for ensuring the 75 highlighted spaces in Exhibit "A" are available at all times. Availability is subject to Licensor's reasonable discretion and may not be permitted during the holiday season or on major events, such as Tree Lighting.

H. **PREFERRED DAY RATE:** Guests of the Holocaust Museum will be charged the preferred day rate of Ten and 00/100 Dollars ($10.00) per ticket when parking in The Grove Parking Structure. The preferred day rate will be available to guests upon display of their Museum sticker at the Concierge desk or the parking office, as determined by Licensor.

I. **PERCENTAGE FEE:** N/A.

J. **UTILITY CHARGE:** N/A

K. **SECURITY DEPOSIT:** N/A

L. **ADDITIONAL INSUREDS:** Licensor, A.F. Gilmore Company, Caruso Management Company, Ltd., their respective affiliated entities, and each of their respective officers, directors, members, managers, shareholders, partners, agents and employees, and all parties that have interests in encumbrances upon the Center (collectively, the "**Licensor Parties**") and such other persons or entities as Licensor may designate to be named as Additional Insureds.

2. **Grant of License; Licensed Area.** Licensor hereby grants to Licensee and Licensee hereby accepts from Licensor a license to use the Licensed Area for the Permitted Use during the Term upon the terms and subject to the conditions set forth in this Agreement (the "**License**"). Licensee acknowledges that the License is expressly subject to the terms and condition of (a) that certain Lease dated as of August, 2000, by and between A.F. Gilmore Company, California corporation (as Landlord) ("**Ground Lessor**") and Licensor (as Tenant and successor-in-interest to The Grove at Farmer's Market, LLC) (as subsequently amended, modified and supplemented, the "**Ground Lease**"); and (b) all other matters of record encumbering or otherwise affecting the Center. All references to the Center herein shall be deemed to include, without limitation, any and all common areas and facilities designated by Licensor from time to time for the nonexclusive use of Licensee in common with other authorized users (collectively, "**Common Area**"). Notwithstanding the foregoing or any other provision of this Agreement to the contrary, it is understood and agreed that the Common Area shall not in any event be deemed to be a portion of or included with the Licensed Area licensed to Licensee hereunder. Such Common Area shall be subject to the exclusive management and control of Licensor. Licensor shall have the right from time to time to designate, relocate and limit the use of particular areas or portions of the Common Area and to establish, propagate and enforce the rules and regulations concerning the Common Area. **DESIGN APPROVAL: All images and signage shall be approved by Licensor, in Licensor's sole and absolute discretion prior to any installation by Licensee.**

3. **Use**. Licensee shall use the Licensed Area only for the Permitted Use and for no other uses whatsoever.

4. **Preferred Day Rate.** Guests of Licensee will pull into The Grove Parking Structure at any time of day, pull a ticket, go to the museum and receive a sticker for visiting. Upon their return to The Grove, the guest will visit the parking office or the Concierge desk, as determined by Licensor, and provide their sticker as proof of attendance at the Holocaust Museum. The guest shall thereafter, regardless of length of visit, be charged the preferred day rate of Ten Dollars and 00/100 ($10.00) for parking in The Grove Parking Structure.

5. Intentionally Deleted.

6. **Interest and Late Charge.** Licensee acknowledges that late payment by Licensee to Licensor of License Fees during the Term will cause Licensor to incur costs not contemplated by this Agreement, the exact amount of such costs being extremely difficult and impracticable to fix. Such costs include, without limitation, processing and accounting charges. Therefore, if Licensee shall fail to make any payment of License Fees to Licensor when due during the Term, interest on said late payment shall accrue at the rate of one and one-half percent (1½ %) per month, or the highest rate permitted by applicable law, whichever is less, from the date said payment was due, and said interest shall become due and payable on the first day of the month following the month in which said payment was due.

7. **Security Deposit.** Licensee shall deposit with Licensor a Security Deposit, if any in the amount set forth in Paragraph 1.K above to secure Licensee's performance of each and every covenant and agreement to be performed by Licensee hereunder. Licensor shall have the right, at its option, to apply all or part of the Security Deposit toward the payment of the amounts required to remedy any default of Licensee in the payment of License Fees and/or in the performance of any other covenant or agreement contained herein, provided however, the existence of the Security Deposit shall not affect the rights of the Licensor in the event of any such nonpayment or failure to perform, nor shall the same in any way limit Licensee's responsibility therefore, and shall not preclude or extinguish any other right or remedy to which Licensor may be entitled. If Licensor applies all or part of the Security Deposit, Licensee shall, upon notice from Licensor, pay to Licensor an amount sufficient to restore the Security Deposit to the original full amount. Upon termination of this Agreement, Licensor shall promptly reimburse Licensee for the amount of any unused portion of the Security Deposit and in no event shall any interest be due and owing thereon.

8. **Work at Licensed Area.** Licensee accepts the Licensed Area in an "as-is, where-is, with all faults" condition. Licensee shall not be obligated to improve, alter or modify the Licensed Area. Licensee shall not conduct any construction activity at the Licensed Area. Licensee shall pay all taxes (if any) based on any property of Licensee, real or personal, which shall at any time be in the Licensed Area or any other part of the Center.

9. **Utilities**. Nothing contained in this Agreement shall limit Licensor in any way from granting or using easements on, across, over and under the Center for the purpose of providing utility services.

10. **Maintenance of the Licensed Area.** Licensor and Licensee acknowledge that the Licensed Area consists of parking spaces in The Grove Parking Structure. Licensor, and not Licensee, shall be responsible for the repair and maintenance of The Grove Parking Structure, which includes the Licensed Area. Accordingly, Licensee shall not be obligated to maintain or make any repairs to the Licensed Area.

11. **Intentionally Omitted.**

12. **Parking.** Subject to the taking of vehicle parking spaces by condemnation or other similar governmental events beyond the reasonable control of Licensor, Licensor shall maintain not less than that number of vehicle parking spaces which are prescribed by applicable law ("**Code Requirements**"). Licensee has personally inspected the Center, or plans therefor, and has satisfied itself that parking is adequate for Licensee's purposes. Licensor shall have the right, but not the obligation, to: (i) reasonably designate from time to time which part(s) of the Center shall be used for vehicle parking by Licensee and Licensee's customers, sublessees, concessionaires, and invitees, provided that Licensee shall remain entitled to the use of seventy five (75) parking spaces upon the terms and conditions of this Agreement; (ii) require that Licensee and Licensee's employees park their vehicles in designated parking areas, including Easement Areas; (iii) establish restricted and exclusive parking zones; and (iv) institute fee and/or validated parking controls with variable fees, provided that the terms of Section 4 above shall apply with respect to Licensee and the museum guests**. Licensee shall receive four (4) complimentary parking passes for the term.**

13. **Use of Licensed Area.** Licensee shall not, without Licensor's prior written consent, given in Licensor's sole discretion, use any portion of the Licensed Area or Center: (i) to conduct or advertise any auction, bankruptcy, fire, distress, liquidation, relocation, close-out, going out of business, sheriff's or receiver's sale on or from the Licensed Area, or any other sale that, in Licensor's reasonable opinion, adversely affects the reputation of the Center; (ii) to sell any so-called "Army and Navy" surplus, or previously worn or "used" goods, as those terms are generally used at this time and from time to time hereafter (except for fine antique furniture and antique jewelry or fine used clothes) or other store selling merchandise which is primarily "seconds", "odd-lots", damaged or discontinued including swap shops and "outlet stores"; (iii) to store, sell or display any merchandise or other objects outside the exterior walls, permanent doorways or roof of the Licensed Area; (iv) to use, generate, manufacture, store or handle, or cause or permit to be brought upon, stored, manufactured, blended, handled, discharged or used on or about the Licensed Area or the Common Area, any hazardous material except for materials normally and legally used for office, retail, and janitorial cleaning and food and beverage preparation, provided that Licensee stores such products on the Licensed Area in limited quantities and in prescribed receptacles to insure against hazardous spillage and Licensee uses such materials only for their intended purposes and in the manner prescribed by the manufacturers and applicable law; (v) any self-storage facilities; (vi) any medical or health-oriented facilities or offices, including hospitals, medical or dental laboratories; (vii) any industrial type use (e.g., manufacturing, warehousing, processing, assembly, plating); (viii) to damage, deface or overload the plumbing, electrical, HVAC or structural systems of the Licensed Area; (ix) to conduct any activity which may make void or voidable or increase the premium on any insurance coverage on the Center or parts thereof; (x) for ambulance services; (xi) for any governmental use or office, except as expressly permitted herein or any social service functions or facilities; (xii) for the operation of "adult" or "adult business" uses and sexually oriented businesses, including a massage parlor or bath house, adult book or adult video store, or for the sale, rental or exhibition of pornographic material and/or display in storefront windows or in areas within the Licensed Area which are visible from outside of the Licensed Area, any sign, product or advertising material which is or is for pornographic or "adult" material; (xiii) in a manner which is a public or private nuisance including any which creates undue noise, sound, vibration, litter or odor; (xiv) for a night club or discotheque, tavern, pub, bar, cocktail lounge or similar establishment whether or not featuring any form of "adult entertainment" (except for a sit-down full table service restaurant featuring non-adult regularly scheduled live entertainment) or the sale of alcoholic beverages, other than for off-site consumption, sales by a grocery market, drug store or fine wine and spirits store, or in conjunction with a sit-down restaurant; (xv) for a roller or skating rink, skateboard or other rink or area, game room, card room, billiard room or parlor, amusement center, arcade, including use of any video or mechanical game machines, bowling alley, health spa, health club, exercise club, gymnasium or other similar operations; (xvi) for lodging, including a hotel, motor inn, apartments or condominiums; (xvii) for vehicle, including new or used automobile, truck, trailer, R.V. or boat dealer (or other similar enterprise), sales, leasing, display or repair (other than for office functions relating to such operations); (xviii) for a funeral parlor or mortuary; (xix) for a mobile home or trailer court; (xx) for any dumping, disposing, recycling, incineration or reduction on a large-scale commercial basis of refuse and recyclables (exclusive of collection in appropriately screened areas of refuse and recyclables resulting from normal day to day operations in the locations designated by Licensor from time to time); (xxi) for any commercial laundry or dry cleaning plant or coin operated laundromat; (xxii) senior or child day care center or school (other than in conjunction with a retail or, in the case of day care, office operation but in no event to exceed 10,000 square feet); (xxiii) for any veterinary hospital, animal boarding, training or raising facilities or pet shop; (xxiv) for any separately demised newsstand; (xxv) for an off-track betting business, bingo, lottery or similar "games of chance" sales or facility; (xxvi) for the sale of food, beverage or merchandise from vending machines or for the operation of any coin or token operated vending machines or exterior telephones on the Licensed Area, except for employees of Licensee; (xxvii) for the placement of any aerial or antenna on the roof or exterior walls of the Licensed Area; (xxviii) for the display of billboards or large advertisements whether free-standing, painted upon or affixed to the exterior of any structure; (xxix) for any astrology, palm reading, tarot card or other like service or facility; (xxx) for answering services; (xxxi) for a barber college; (xxxii) for a carnival, amusement park or circus; (xxxiii) for churches, synagogues, temples and houses of worship; (xxxiv) for contractors' offices (other than during construction of the Center or portions thereof); (xxxv) for data processing businesses; (xxxvi) for detective or investigatory services; (xxxvii) for employment agencies; (xxxviii) for professional offices including escrow services and real estate offices (except for on-site project sales, leasing or management offices); (xxxix) for "head shops" or other sale of paraphernalia for use with illicit drugs; (xl) for a fast food drive through restaurant; (xli) for financial offices, including banks, other than retail financial service operations no larger than 3,000 square feet; (xlii) for a flea market (whether indoors or outdoors); (xliii) for a gas or fuel station; (xliv) for gun shops; (xlv) for labor union offices; (xlvi) for mail order houses; (xlvii) for pawnshops; (xlviii) for places of instruction, reading room or any operation catering primarily to students or trainees rather than to customers; (il) for political offices; (l) for private educational institutions; (li) for telephone and communications services; or (lii) auto parts or accessories retailer (as a primary use). All of the foregoing uses are sometimes collectively referred to herein as the "**Prohibited Uses**". Licensee shall at all times, at Licensee's sole cost and expense, observe the following rules and regulations; (a) omitted, (b) Licensee shall not perform any act or carry on any practice which constitutes a nuisance to persons at the Licensed Area or the Center or which Licensor shall otherwise reasonably determine to be offensive or dangerous; (c) Licensee shall not burn any trash or garbage in or about the Licensed Area or anywhere else in the Center; (d) Licensee shall at all times comply with all laws, rules and regulations pertaining to the Licensed Area and/or the Center and/or the conduct of Licensee's business thereat promulgated by any governmental agency having jurisdiction with respect thereto (including, without limitation, the Americans with Disabilities Act), provided that the foregoing shall not obligate Licensee to improve or modify the Licensed Area; (e) omitted; (f) omitted; (g) Licensee shall not distribute any handbills or other advertising material in the Center; (h) Licensee and its guests shall park their cars only in the Licensed Area; (i) omitted; (j) Licensee shall not use, bring upon, or generate at the Licensed Area any substance which is now or hereafter deemed hazardous or toxic by any governing or regulatory body having jurisdiction; (k) Licensee shall not do, bring, or keep anything in or about the Licensed Area or the Center that will cause a cancellation of any insurance covering the Licensed Area or the Center, or any portion thereof; (l) Licensee shall not use the Licensed Area or the Center in any manner that will constitute waste, nuisance, or unreasonable annoyance to owners or occupants of adjacent properties, or to the other licensee's, tenants or occupants in the Center; (m) Licensee shall not use the Licensed Area or the Center for sleeping, washing clothes, cooking or the preparation, manufacture, or mixing of anything that might emit any odor or objectionable noises or lights into the Licensed Area or Center; (n) Licensee shall not sell or display merchandise outside the confines of the Licensed Area or in the mall or the Common Areas; (o) Licensee shall not do anything on the Licensed Area or in the Center that will cause damage to the Licensed Area or the Center; and (p) the Licensed Area shall not be overloaded and no machinery apparatus or other appliance shall be used or operated in or on the Licensed Area or in the Center that will in any manner injure, vibrate, or shake the Licensed Area or the Center. Licensee shall comply with such other reasonable rules and regulations as Licensor may from time to time adopt with respect to the Center.

14. **Termination**. Licensor shall have the right to terminate this License Agreement for any reason upon sixty (60) days prior written notice to Licensee.

15. **Signs and Advertising.** Licensee shall not be obligated to install, or pay for the installation of, any signage. Licensee shall not erect, place, paint, or maintain in or on the Licensed Area, including on any plate glass windows or doors, any sign or any object of any kind whatsoever, visible from outside the Licensed Area without the prior written consent of Licensor, which consent may be given at Licensor's sole and absolute discretion. Neither Licensee nor its agents, employees or representatives shall solicit or distribute any materials in the Common area unless such activity is performed in accordance with Licensor's procedures for the same and has been approved in advance by Licensor. Licensee shall not use the name of the Center on any merchandise without first procuring the specific written approval of same from Licensor, which Licensor may withhold in its sole discretion. Balloons and other outdoor displays will not be permitted.

16. **Hours of Operation.** Intentionally Deleted.

17. **Delayed Opening License Fee.** Intentionally Deleted

18. **Access to Licensed Area.** Licensor reserves the right to enter upon the Licensed Area at all reasonable hours for the purpose of inspecting the same, or the use thereof by Licensee, or for making emergency repairs. The exercise by Licensor of any of its rights herein shall not be deemed an eviction or disturbance of Licensee's use and possession of Licensed Area.

19. **Security.** Licensor may, but shall have no obligation, from time to time, cause on (1) or more persons or entities to patrol or provide security for the Premises. Under no circumstances shall Licensor be liable to Licensee or to any other person by reason of any theft, burglary, robbery, assault, trespass, unauthorized entry, vandalism, or any other act of any third person occurring in or about the Premises unless caused by Licensor's criminal or gross negligence. Nothing contained herein shall be deemed to create any liability upon Licensor for any damage to motor vehicles of Licensee or its customers or employees or for loss of property from within such motor vehicles. At all times and in all respects, Licensee shall comply with all federal, state and local laws, ordinances and regulations including, but not limited to, all applicable environmental laws, ordinances and regulations.

20. **Insurance.** Licensee shall maintain in full force and effect during the Term a commercially reasonable policy of commercial general liability insurance, with limits of no less than $2 million per occurrence, $5 million annual aggregate (which Licensee may fulfill with umbrella policies), issued by an insurer or insurers licensed in the State of California, which will name The Grove as an additional insured and which will protect Licensee and its affiliates and additional insureds from claims set forth below which may result out of Licensee's actions or inactions.

21. **Waiver of Claims and Indemnity.**

(a) Licensee shall indemnify, defend, and hold harmless Licensor, Licensor's Affiliates, and all shareholders, members, managers, limited partners, general partners, directors, officers, employees, agents, attorneys, successors or assigns of Licensor or any Affiliate of Licensor (collectively, the "**Indemnified Parties**") from and against, and reimburse them for, all claims, demands, liabilities, losses, damages, causes of action, judgments, penalties, costs and expenses (including reasonable attorneys' fees) which may be imposed upon, asserted against or incurred or paid by them by reason of, on account of or in connection with any bodily injury or death or property damage caused by the ~~gross~~ negligence or willful misconduct of Licensee or its guests who are utilizing the Licensed Area for parking; provided, however, that Licensee shall not be obligated to indemnify Licensor or any of the Indemnified Parties for their own negligence. The foregoing indemnities shall survive termination of this Agreement.

(b) In the event any claim for which Licensee is obligated to indemnify the Indemnified Parties pursuant to Section 21(a) above is asserted or action instituted against one or more of the Indemnified Parties by a third party (a "Third Party Claim"), Licensee shall promptly upon receipt of notice of such Third Party Claim assume and pay for the defense of such Indemnified Party, and shall satisfy any judgment against such Indemnified Party that may be rendered due to such Third Party Claim. Licensee shall be entitled to assume and control the defense of any Third Party Claim through counsel reasonably approved by the Indemnified Party if it gives notice of its intention to do so to the Indemnified Party; provided, however, that Licensee shall not have the right to assume such defense, and shall pay the actual, reasonable fees and expenses of outside counsel retained by the Indemnified Party, if the Third Party Claim over which the Indemnified Party seeks to assume control (i) seeks non-monetary relief, (ii) involves criminal allegations, (iii) involves a claim which the Indemnified Party reasonably determines that Licensee failed or is failing to defend (except that, unless the Indemnified Party is actually prejudiced by delay, Licensee shall be afforded 30 days following receipt of written notice of such failure by the Indemnified Party in which to cure such failure to the Indemnified Party's reasonable satisfaction), or (iv) involves a claim the amount in controversy of which exceeds $1,000,000. The Indemnified Party shall cooperate with Licensee in such defense and make available to Licensee, at Licensee's expense, all witnesses, pertinent records, materials and information in the Indemnified Party's possession or reasonable control relating thereto as is reasonably requested by Licensee. If Licensee does not assume control of such defense, the Indemnified Party shall control such defense and Licensee shall pay the actual, reasonable fees and expenses of outside counsel retained by the Indemnified Party. The party not controlling such defense may participate therein at its own expense; provided that if Licensee assumes control of such defense and the Indemnified Party reasonably concludes that Licensee and the Indemnified Party have actual or potential conflicts of interests with respect to such action, suit, proceeding or claim, the reasonable fees and expenses of counsel to the Indemnified Party solely in connection therewith shall be paid by Licensee on a current basis. The party controlling such defense shall keep the other party advised of the status of such action, suit, proceeding or claim and the defense thereof and shall consider recommendations made by the other party with respect thereto. Except with the written consent of the Indemnified Party, which shall not be unreasonably withheld, conditioned or delayed, Licensee will not, in the defense of a Third Party Claim, consent to the entry of any judgment or enter into any settlement which does not include as an unconditional term thereof the giving to the Indemnified Party by the third party of a full release from all liability with respect to such suit, claim, action, or proceeding.

22. **Damage.** If the Licensed Area is damaged by fire, explosion, or other casualty or occurrence or are taken by condemnation, then this Agreement shall automatically terminate as of the date of such occurrence.

23. **Default.** If (i) Licensee shall fail to pay when due any License Fees, or (ii) if Licensee shall fail to perform or comply with any other term, condition or covenant on the part of Licensee to be observed herein, then, in any such event, Licensor shall give Licensee written notice thereof, and if Licensee does not cure such failure within ten (10) days, then Licensee shall be in breach hereunder and Licensor, at its option, any time thereafter, may terminate the License and this Agreement by notice to Licensee and, upon service of said notice, the License and this Agreement shall be terminated, Licensee's right to use the Licensed Area shall immediately cease, and Licensee shall immediately remove all of its personal property from the Licensed Area. If Licensee shall fail to remove its personal property from the Licensed Area at the expiration of the Term, whether after Licensee's breach or otherwise, Licensor may re-enter the Licensed Area and remove property of Licensee's found within the Licensed Area and Licensor shall not be liable from any damages resulting therefrom. Upon a breach by Licensee hereunder beyond applicable notice and cure periods, Licensor shall also have all other rights available to it at law or equity. No act by Licensor other than giving written notice to Licensee in accordance with the express provisions of this Agreement shall terminate this Agreement. Acts of maintenance, efforts to re-license or to lease the Licensed Area, or the appointment of a receiver on Licensor's initiative to protect Licensor's interest under this Agreement shall not constitute a termination of this Agreement. On termination of this Agreement following Licensee's breach hereof beyond applicable notice and cure periods, Licensor shall have the right to recover from Licensee all of Licensor's damages resulting from or arising out of Licensee's breach.

24. **Return of Licensed Area.** Upon the expiration of the Term, or upon the earlier termination of the Agreement (whether pursuant to Licensor's election to terminate this Agreement or otherwise) Licensee return the Licensed Area to Licensor in substantially the same condition as the Licensed Area was in on the Commencement Date, reasonable wear and tear excepted. Any such damage will be deducted from the Security Deposit. Licensee shall remove any and all merchandise and other personal property of Licensee from the Licensed Area at the expiration of the Term. If Licensee does not remove its property as herein provided such property shall be deemed abandoned by Licensee and Licensor may dispose of same as it sees fit. Notwithstanding the foregoing, Licensee acknowledges and agrees that Licensee's failure to fully timely comply with the provisions of this Paragraph 23 shall cause Licensor significant damages and losses which might otherwise be foreseeable by Licensee and Licensor shall retain all of its rights and remedies to recover such damages and losses from Licensee notwithstanding the

NOT FOR CONSTRUCTION

17.NOV.2021
100% DESIGN SUBMITTAL

ba
belzberg architects
2740 MAIN STREET
SANTA MONICA, CA 90405
310.453.9611
www.belzbergarchitects.com

#	DESCRIPTION	DATE
1	P.C. VERIF 1	12/10/2021

HOLOCAUST MUSEUM LA EXPANSION

100 THE GROVE DRIVE
LOS ANGELES, CA 90036

PARKING AGREEMENT

PROJECT NUMBER: 17009

1

G047

11/18/2021 3:10:28 PM

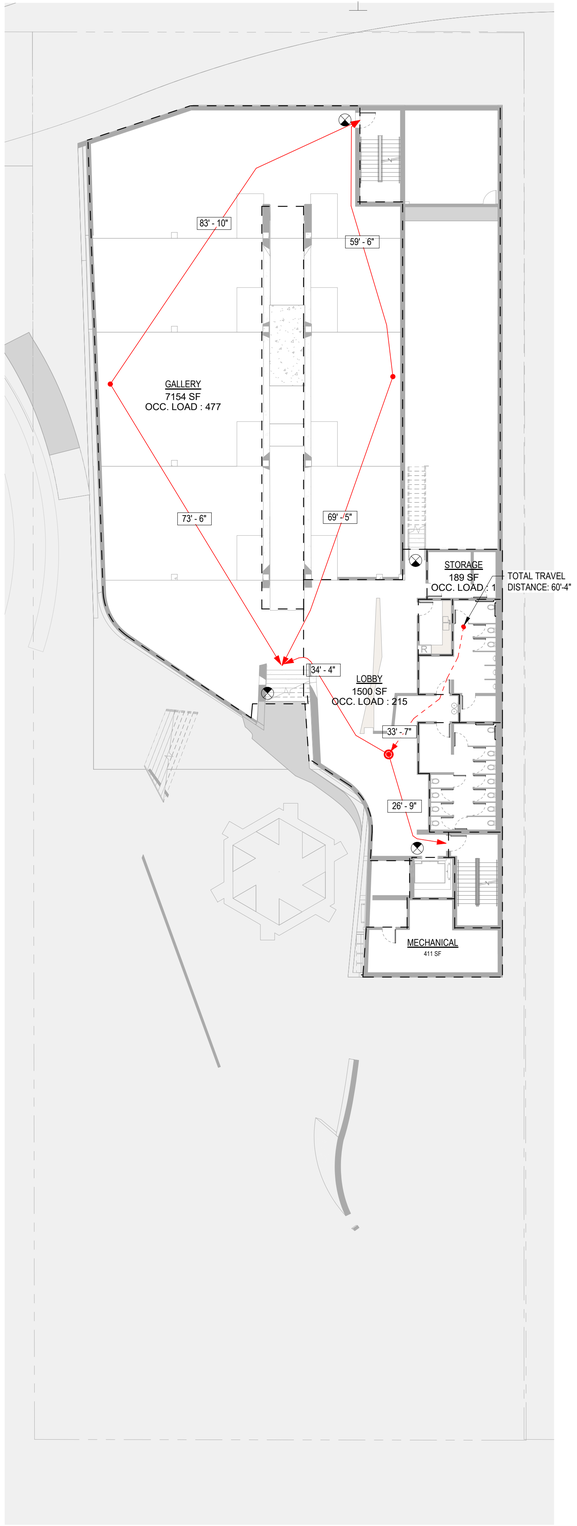

EX01
SCALE: 1/16" = 1'-0" 2

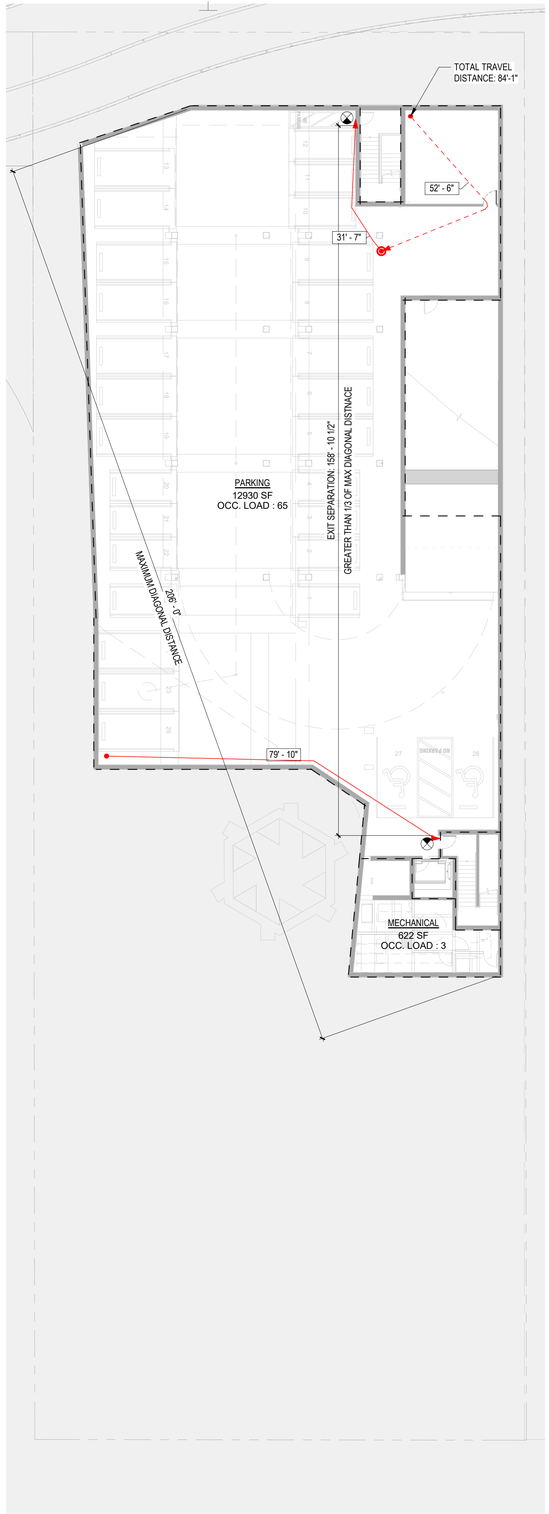

EX00
SCALE: 1/16" = 1'-0" 1

NORTH

OCCUPANCY CALCULATION - EX01

NAME	AREA	LEVEL	OCC. GROUP	LOAD FACTOR	OCC. LOAD
EX01					
GALLERY	7154 SF	EX01	A-3	15 SF	477
LOBBY	1500 SF	EX01	A-3	7 SF	215
STORAGE	189 SF	EX01	A-3	300 SF	1
MECHANICAL	411 SF	EX01	A-3	300 SF	2
EX01: 4					695
OCCUPANT LOAD TOTAL					695

OCCUPANCY CALCULATION - EX00

NAME	AREA	LEVEL	OCC. GROUP	LOAD FACTOR	OCC. LOAD
EX00					
PARKING	12930 SF	EX00	A-3	200 SF	65
MECHANICAL	622 SF	EX00	A-3	300 SF	3
STAIRS	241 SF	EX00	A-3	0 SF	
EX00: 3	13793 SF				68
OCCUPANT LOAD TOTAL	13793 SF				68

LEGEND & NOTES

- COMMON PATH OF TRAVEL
- EXIT ACCESS
- PATH TO PUBLIC WAY
- TWO-WAY POINT
- EXIT SIGN, DIRECTIONAL ARROW WHERE OCCURS

DOOR
- OCCUPANT LOAD
- WIDTH FACTOR
- REQUIRED WIDTH (IN))
- ACTUAL WIDTH (IN)

STAIR
- OCCUPANT LOAD
- WIDTH FACTOR
- REQUIRED WIDTH (IN))
- ACTUAL WIDTH (IN)

- BUILDING WILL BE FULLY SPRINKLERED

- PER CBC 2019 TABLE 1006.2.1
MAX. COMMON PATH OF EGRESS TRAVEL DISTANCE W/SPRINKLER SYSTEM FOR OCCUPANCY A : 75'

- PER CBC 2019 TABLE 1017.2
MAX. EXIT ACCESS TRAVEL DISTANCE W/SPRINKLER FOR OCCUPANCY A: 250'

- PER EXCEPTION CBC 2019 SECTION 1005.3.1
REQUIRED EGRESS CAPACITY FACTOR FOR STAIRWAYS W/SPRINKLER: 0.2

- PER EXCEPTION CBC 2019 SECTION 1005.3.2
REQUIRED EGRESS CAPACITY FACTOR FOR EGRESS COMPONENTS (EXIT DOORS) W/SPRINKLER: 0.15

NOT FOR CONSTRUCTION

17.NOV.2021
100% DESIGN SUBMITTAL

ba
belzberg architects
2740 MAIN STREET
SANTA MONICA, CA 90405
310.453.9611
www.belzbergarchitects.com

#	DESCRIPTION	DATE

HOLOCAUST MUSEUM LA EXPANSION

100 THE GROVE DRIVE
LOS ANGELES, CA 90036

OCCUPANCY AND EGRESS (EXISTING)

PROJECT NUMBER: 17009

G050

11/18/2021 3:10:32 PM

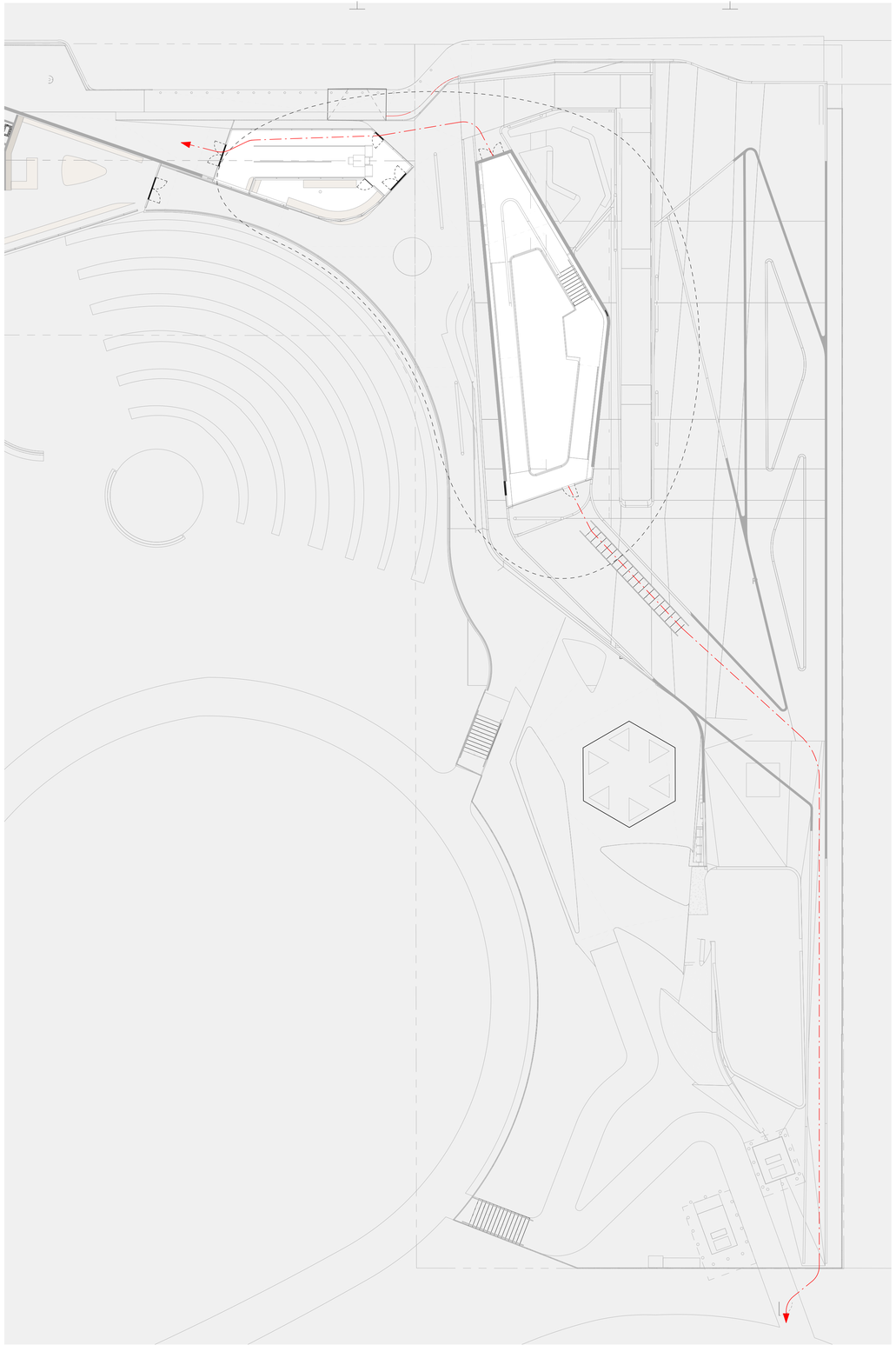

EXRF 2
SCALE: 1/16" = 1'-0"

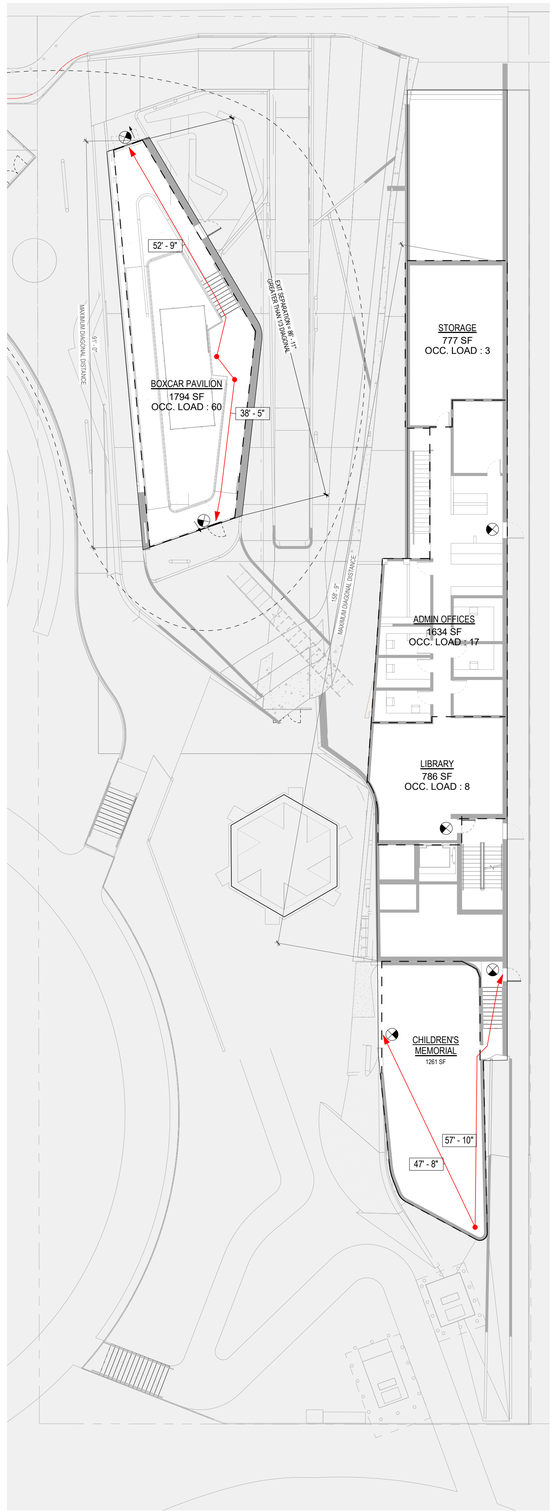

EX02 1
SCALE: 1/16" = 1'-0"

OCCUPANCY CALCULATION - EX02

NAME	AREA	LEVEL	OCC. GROUP	LOAD FACTOR	OCC. LOAD
EX02					
LIBRARY	786 SF	EX02	A-3	100 SF	8
ADMIN OFFICES	1634 SF	EX02	A-3	100 SF	17
STORAGE	777 SF	EX02	A-3	300 SF	3
BOXCAR PAVILION	1794 SF	EX02	A-3	30 SF	60
CHILDREN'S MEMORIAL	1261 SF	EX02			
EX02: 5					88
OCCUPANT LOAD TOTAL					88

LEGEND & NOTES

- COMMON PATH OF TRAVEL
- EXIT ACCESS
- PATH TO PUBLIC WAY
- TWO-WAY POINT
- EXIT SIGN, DIRECTIONAL ARROW WHERE OCCURS

DOOR
- OCCUPANT LOAD
- WIDTH FACTOR
- REQUIRED WIDTH (IN))
- ACTUAL WIDTH (IN)

STAIR
- OCCUPANT LOAD
- WIDTH FACTOR
- REQUIRED WIDTH (IN))
- ACTUAL WIDTH (IN)

- BUILDING WILL BE FULLY SPRINKLERED

- PER CBC 2019 TABLE 1006.2.1
MAX. COMMON PATH OF EGRESS TRAVEL DISTANCE W/SPRINKLER SYSTEM FOR OCCUPANCY A : 75'

- PER CBC 2019 TABLE 1017.2
MAX. EXIT ACCESS TRAVEL DISTANCE W/SPRINKLER FOR OCCUPANCY A: 250'

- PER EXCEPTION CBC 2019 SECTION 1005.3.1
REQUIRED EGRESS CAPACITY FACTOR FOR STAIRWAYS W/SPRINKLER: 0.2

- PER EXCEPTION CBC 2019 SECTION 1005.3.2
REQUIRED EGRESS CAPACITY FACTOR FOR EGRESS COMPONENTS (EXIT DOORS) W/SPRINKLER: 0.15

NOT FOR CONSTRUCTION

17.NOV.2021
100% DESIGN SUBMITTAL

ba
belzberg architects
2740 MAIN STREET
SANTA MONICA, CA 90405
310.453.9611
www.belzbergarchitects.com

#	DESCRIPTION	DATE

HOLOCAUST MUSEUM LA EXPANSION

100 THE GROVE DRIVE
LOS ANGELES, CA 90036

OCCUPANCY AND EGRESS (BOXCAR)

PROJECT NUMBER: 17009

G051

11/18/2021 3:10:52 PM

OCCUPANCY CALCULATION - 02 MEZZANINE					
NAME	AREA	LEVEL	OCC. GROUP	LOAD FACTOR	OCC. LOAD
02 MEZZANINE					
SOUND BOOTH	350 SF	02 MEZZANINE	A-3	100 SF	4
02 MEZZANINE: 1					4
OCCUPANT LOAD TOTAL					4

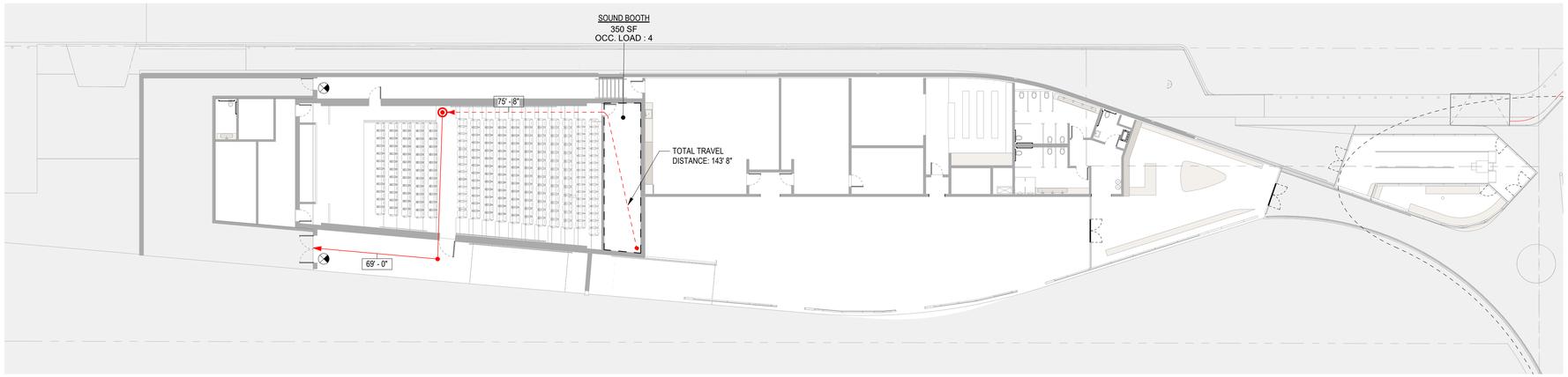

02 MEZZANINE
SCALE: 1/16" = 1'-0" 2

OCCUPANCY CALCULATION - 01 GALLERY					
NAME	AREA	LEVEL	OCC. GROUP	LOAD FACTOR	OCC. LOAD
01 GALLERY					
AUDITORIUM	2381 SF	01 GALLERY	A-3	12 SF	197
CORRIDOR B	523 SF	01 GALLERY	A-3		
STORAGE	714 SF	01 GALLERY	S-2	300 SF	3
GR	99 SF	01 GALLERY	A-3	15 SF	7
CLASSROOM A	1003 SF	01 GALLERY	A-3	20 SF	51
CLASSROOM B	518 SF	01 GALLERY	A-3	20 SF	26
DIT	793 SF	01 GALLERY	A-3	26 SF	31
OFFICE	234 SF	01 GALLERY	A-3	100 SF	3
EQUIP	64 SF	01 GALLERY	A-3		
VESTIBULE	161 SF	01 GALLERY	A-3		
GALLERY	2661 SF	01 GALLERY	A-3	30 SF	89
RESTROOM (W)	288 SF	01 GALLERY	A-3	100 SF	3
RESTROOM (M)	216 SF	01 GALLERY	A-3	100 SF	3
GIFT SHOP	1202 SF	01 GALLERY	A-3	50 SF	25
RESTROOM (U)	66 SF	01 GALLERY	A-3	100 SF	1
01 GALLERY: 15					439
OCCUPANT LOAD TOTAL					439

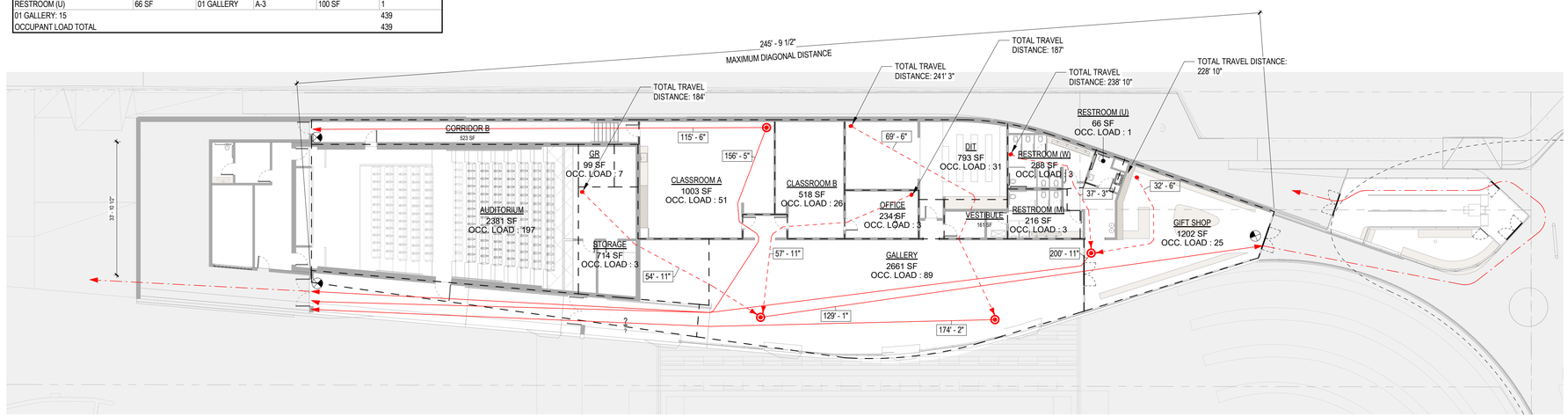

01 GALLERY
SCALE: 1/16" = 1'-0" 1

LEGEND & NOTES

- COMMON PATH OF TRAVEL
- EXIT ACCESS
- PATH TO PUBLIC WAY
- TWO-WAY POINT
- EXIT SIGN, DIRECTIONAL ARROW WHERE OCCURS

DOOR
- OCCUPANT LOAD
- WIDTH FACTOR
- REQUIRED WIDTH (IN))
- ACTUAL WIDTH (IN)

STAIR
- OCCUPANT LOAD
- WIDTH FACTOR
- REQUIRED WIDTH (IN))
- ACTUAL WIDTH (IN)

- BUILDING WILL BE FULLY SPRINKLERED

- PER CBC 2019 TABLE 1006.2.1
MAX. COMMON PATH OF EGRESS TRAVEL DISTANCE W/SPRINKLER SYSTEM FOR OCCUPANCY A : 75'

- PER CBC 2019 TABLE 1017.2
MAX. EXIT ACCESS TRAVEL DISTANCE W/SPRINKLER FOR OCCUPANCY A: 250'

- PER EXCEPTION CBC 2019 SECTION 1005.3.1
REQUIRED EGRESS CAPACITY FACTOR FOR STAIRWAYS W/SPRINKLER: 0.2

- PER EXCEPTION CBC 2019 SECTION 1005.3.2
REQUIRED EGRESS CAPACITY FACTOR FOR EGRESS COMPONENTS (EXIT DOORS) W/SPRINKLER: 0.15

NOT FOR CONSTRUCTION

17.NOV.2021
100% DESIGN SUBMITTAL

ba
belzberg architects
2740 MAIN STREET
SANTA MONICA, CA 90405
310.453.9611
www.belzbergarchitects.com

#	DESCRIPTION	DATE

HOLOCAUST MUSEUM LA EXPANSION

100 THE GROVE DRIVE
LOS ANGELES, CA 90036

OCCUPANCY AND EGRESS (NEW)

PROJECT NUMBER: 17009

G052

11/18/2021 3:11:04 PM

INFORMATION BULLETIN / PUBLIC - BUILDING CODE

REFERENCE NO.: LABC Sec. 11B-226.4, 307,308, 309,704,902 Effective: 01/01/2020

DOCUMENT NO.: **P/BC 2020-089** Revised:

Previously Issued As: P/BC 2017-089

ACCESSIBILITY DETAILS FOR OBSTRUCTIONS, REACH RANGES, TELEPHONES & BABY CHANGING STATIONS

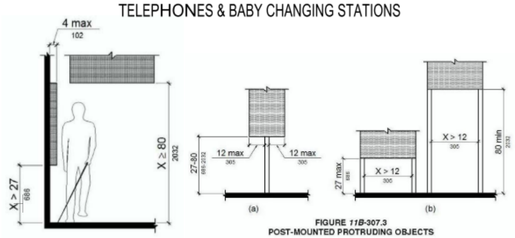

FIGURE *11B*-307.2
LIMITS OF PROTRUDING OBJECTS

FIGURE *11B*-307.3
POST-MOUNTED PROTRUDING OBJECTS

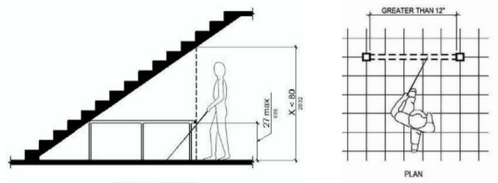

FIGURE *11B*-307.4
VERTICAL CLEARANCE

THESE DIAGRAMS ILLUSTRATE THE SPECIFIC REQUIREMENTS OF THESE REGULATIONS AND ARE INTENDED ONLY AS AN AID FOR BUILDING DESIGN AND CONSTRUCTION

As a covered entity under Title II of the Americans with Disabilities Act, the City of Los Angeles does not discriminate on the basis of disability and, upon request, will provide reasonable accommodation to ensure equal access to its programs, services and activities.

THESE DIAGRAMS ILLUSTRATE THE SPECIFIC REQUIREMENTS OF THESE REGULATIONS AND ARE INTENDED ONLY AS AN AID FOR BUILDING DESIGN AND CONSTRUCTION.

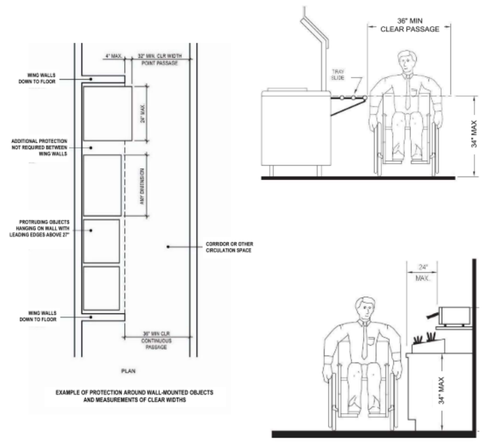

EXAMPLE OF PROTECTION AROUND WALL-MOUNTED OBJECTS AND MEASUREMENTS OF CLEAR WIDTHS

As a covered entity under Title II of the Americans with Disabilities Act, the City of Los Angeles does not discriminate on the basis of disability and, upon request, will provide reasonable accommodation to ensure equal access to its programs, services and activities.

THESE DIAGRAMS ILLUSTRATE THE SPECIFIC REQUIREMENTS OF THESE REGULATIONS AND ARE INTENDED ONLY AS AN AID FOR BUILDING DESIGN AND CONSTRUCTION

REACH RANGE

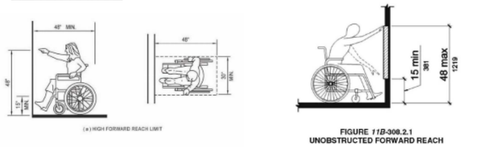

FIGURE *11B*-308.2.1
UNOBSTRUCTED FORWARD REACH

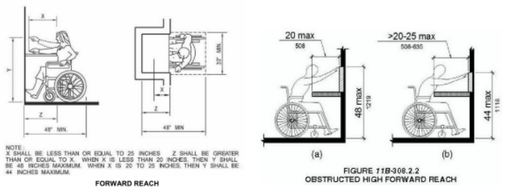

FORWARD REACH

FIGURE *11B*-308.2.2
OBSTRUCTED HIGH FORWARD REACH

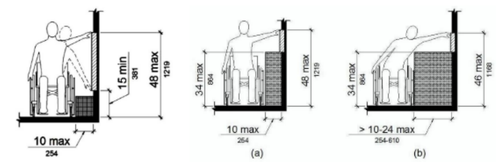

FIGURE *11B*-308.3.1
UNOBSTRUCTED SIDE REACH

FIGURE *11B*-308.3.2
OBSTRUCTED HIGH SIDE REACH

As a covered entity under Title II of the Americans with Disabilities Act, the City of Los Angeles does not discriminate on the basis of disability and, upon request, will provide reasonable accommodation to ensure equal access to its programs, services and activities.

THESE DIAGRAMS ILLUSTRATES THE SPECIFIC REQUIREMENTS OF THESE REGULATIONS AND ARE INTENDED ONLY AS AN AID FOR BUILDING DESIGN AND CONSTRUCTION.

TELEPHONES

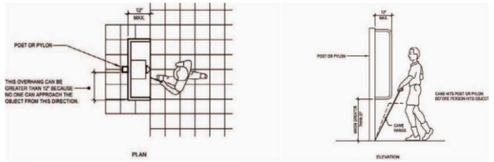

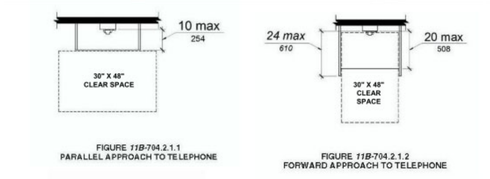

FIGURE *11B*-704.2.1.1
PARALLEL APPROACH TO TELEPHONE

FIGURE *11B*-704.2.1.2
FORWARD APPROACH TO TELEPHONE

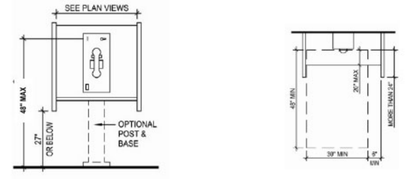

As a covered entity under Title II of the Americans with Disabilities Act, the City of Los Angeles does not discriminate on the basis of disability and, upon request, will provide reasonable accommodation to ensure equal access to its programs, services and activities.

THESE DIAGRAMS ILLUSTRATES THE SPECIFIC REQUIREMENTS OF THESE REGULATIONS AND ARE INTENDED ONLY AS AN AID FOR BUILDING DESIGN AND CONSTRUCTION.

BABY CHANGING TABLES

Note#1: Knee and toe clearance per 11B-306

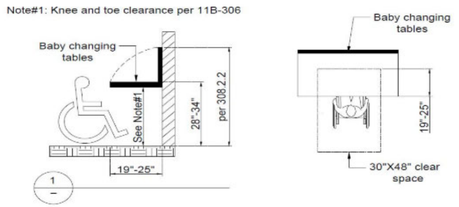

- Baby changing tables can be located in a Unisex (single-user or family) restroom.
- Baby changing tables when deployed shall not obstruct the required width of an accessible route (11B-226.4)

② Baby changing tables can be located in a common use area of a multiple accommodation toilet facility. When deployed it shall not obstruct the required width of an accessible route. (11B-226.4)

③ Baby changing tables shall not be located in an accessible toilet compartments within a multiple accommodation toilet facility.

Note: When a sign is provided to indicate the location of baby diaper changing station is shall comply with raised character,brail and visual character (11B-703). See Sign info bulletin IB P/BC 2017-091 for additional info.

As a covered entity under Title II of the Americans with Disabilities Act, the City of Los Angeles does not discriminate on the basis of disability and, upon request, will provide reasonable accommodation to ensure equal access to its programs, services and activities.

INFORMATION BULLETIN / PUBLIC - BUILDING CODE

REFERENCE NO.: LABC Sec.11B-403,404,405, 408,504,505,802 Effective: 01/01/2020

DOCUMENT NO.: **P/BC 2020-085** Revised: 12/02/2019

Previously Issued As: P/BC 2017-085

ACCESSIBILITY DETAILS FOR RAMPS, STAIRS & ELEVATORS

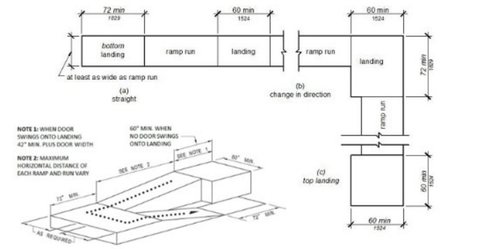

RAMP WITH INTERMEDIATE SWITCH BACK PLATFORM

FIGURE 11B-405.7 RAMP LANDING

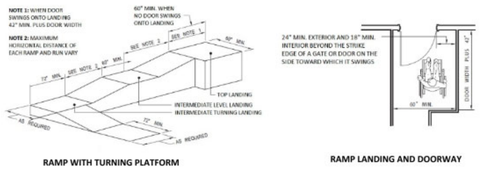

RAMP WITH TURNING PLATFORM

RAMP LANDING AND DOORWAY

As a covered entity under Title II of the Americans with Disabilities Act, the City of Los Angeles does not discriminate on the basis of disability and, upon request, will provide reasonable accommodation to ensure equal access to its programs, services and activities.

THESE DIAGRAMS ILLUSTRATE THE SPECIFIC REQUIREMENTS OF THESE REGULATIONS AND ARE INTENDED ONLY AS AN AID FOR BUILDING DESIGN AND CONSTRUCTION.

RAMPS

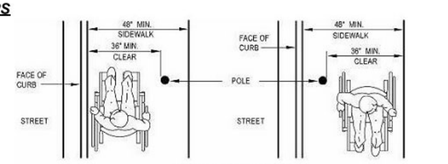

SIDEWALK OBSTRUCTIONS

11B-505.10.1 TOP AND BOTTOM EXTENSION AT RAMPS. Ramp handrails shall extend horizontally above the landing for 12 inches beyond the top and bottom of ramp runs. Extensions shall return to a wall, guard, or landing surface, or shall be continuous to the handrail of an adjacent ramp run.

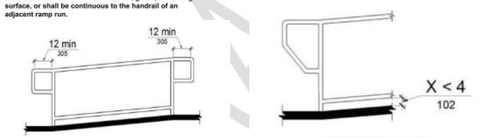

FIGURE *11B*-505.10.1
TOP AND BOTTOM HANDRAIL EXTENSION AT RAMPS

FIGURE *11B*-405.9.2
CURB OR BARRIER EDGE PROTECTION

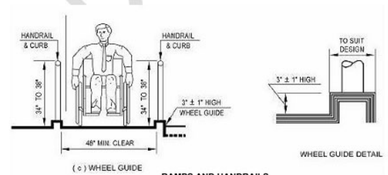

RAMPS AND HANDRAILS

As a covered entity under Title II of the Americans with Disabilities Act, the City of Los Angeles does not discriminate on the basis of disability and, upon request, will provide reasonable accommodation to ensure equal access to its programs, services and activities.

THESE DIAGRAMS ILLUSTRATE THE SPECIFIC REQUIREMENTS OF THESE REGULATIONS AND ARE INTENDED ONLY AS AN AID FOR BUILDING DESIGN AND CONSTRUCTION.

DOORWAYS AT RAMP LANDINGS

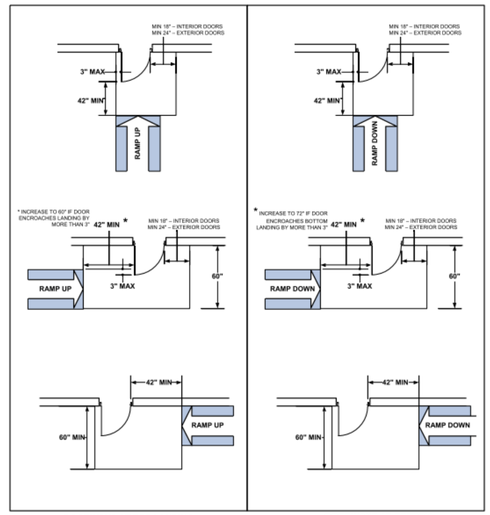

DOORWAYS AT TOP LANDING SPACE OF A RAMP

DOORWAYS AT BOTTOM LANDING SPACE OF A RAMP

As a covered entity under Title II of the Americans with Disabilities Act, the City of Los Angeles does not discriminate on the basis of disability and, upon request, will provide reasonable accommodation to ensure equal access to its programs, services and activities.

NOT FOR CONSTRUCTION

17.NOV.2021
100% DESIGN SUBMITTAL

ba
belzberg architects
2740 MAIN STREET
SANTA MONICA, CA 90405
310.453.9611
www.belzbergarchitects.com

#	DESCRIPTION	DATE

HOLOCAUST MUSEUM LA EXPANSION

100 THE GROVE DRIVE
LOS ANGELES, CA 90036

ACCESSIBILITY DIAGRAMS

PROJECT NUMBER: 17009

G056

11/18/2021 3:11:05 PM

THESE DIAGRAMS ILLUSTRATE THE SPECIFIC REQUIREMENTS OF THESE REGULATIONS AND ARE INTENDED ONLY AS AN AID FOR BUILDING DESIGN AND CONSTRUCTION.

STAIRWAYS

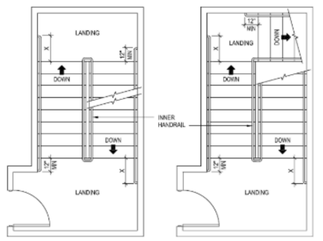

NOTE: INNER HANDRAIL AT LANDINGS OF STAIRS THAT DOUBLE BACK OR IMMEDIATELY TURN SHALL BE CONTINUOUS AND SHALL NOT EXTEND INTO LANDING OR ACCESSIBLE ROUTE OF TRAVEL

X = EXTENSION OF HANDRAIL SHALL BE EQUAL TO THE TREAD WIDTH PLUS 12 INCHES MINIMUM

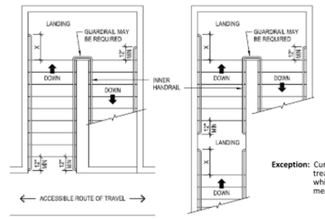

Exception: Curved stairways with winder treads are permitted at stairs which are not part of a required means of egress.

11B-504 STAIRWAYS

THESE DIAGRAMS ILLUSTRATE THE SPECIFIC REQUIREMENTS OF THESE REGULATIONS AND ARE INTENDED ONLY AS AN AID FOR BUILDING DESIGN AND CONSTRUCTION.

STAIRS

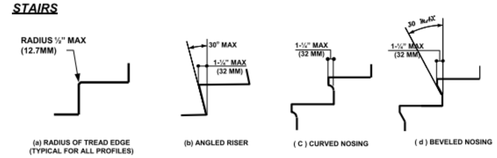

(a) RADIUS OF TREAD EDGE (TYPICAL FOR ALL PROFILES) (b) ANGLED RISER (C) CURVED NOSING (d) BEVELED NOSING

FIGURE 11B-504.5
STAIR NOSINGS

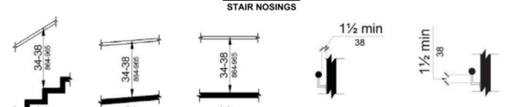

(a) stairs (b) ramps (c) walking surfaces

FIGURE 11B-505.4
HANDRAIL HEIGHT

FIGURE 11B-505.5
HANDRAIL CLEARANCE

FIGURE 11B-505.6
HORIZONTAL PROJECTIONS BELOW GRIPPING SURFACE

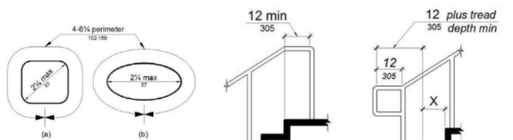

FIGURE 11B-505.7.2
HANDRAIL NON-CIRCULAR CROSS SECTION

FIGURE 11B-505.10.2
TOP HANDRAIL EXTENSION AT STAIRS

FIGURE 11B-505.10.3
BOTTOM HANDRAIL EXTENSION AT STAIRS

INFORMATION BULLETIN / PUBLIC - BUILDING CODE

REFERENCE NO.: LABC Sec.11B-305,604,605 Effective: 01/01/2020
DOCUMENT NO.: P/BC 2020-087 Revised:
Previously Issued As: P/BC 2017-087

ACCESSIBILITY DETAILS FOR RESTROOMS AND DRINKING FOUNTAINS

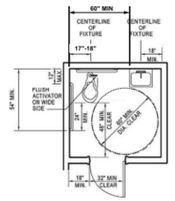

SINGLE-ACCOMMODATION TOILET FACILITY

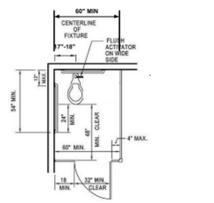

ACCESSIBLE WATER CLOSET COMPARTMENT WITHIN A MULTIPLE-ACCOMMODATION TOILET FACILITY

Doors shall not swing into the clear floor space or clearance required for any fixture. Other than the door to the accessible water closet compartment, a door in any position, may encroach into the turning space by 12 inches maximum. (11B-603.2.3)
Exceptions: (2) Where the toilet room or bathing room is for individual use and a clear floor space complying with Section 11B-305.3 is provided within the room beyond the arc of the door swing, doors shall be permitted to swing into the clear floor space or clearance required for any fixture.

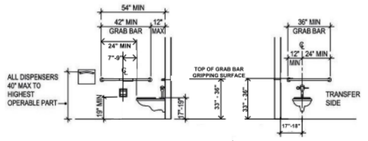

FIGURE *11B*-604.7
DISPENSER OUTLET LOCATION

FIGURE *11B*-604.5.1
SIDE WALL GRAB BAR AT WATER CLOSETS

FIGURE *11B*-604.5.2
REAR WALL GRAB BAR AT WATER CLOSETS

THESE DIAGRAMS ILLUSTRATE THE SPECIFIC REQUIREMENTS OF THESE REGULATIONS AND ARE INTENDED ONLY AS AN AID FOR BUILDING DESIGN AND CONSTRUCTION.

THESE DIAGRAMS ILLUSTRATE THE SPECIFIC REQUIREMENTS OF THESE REGULATIONS AND ARE INTENDED ONLY AS AN AID FOR BUILDING DESIGN AND CONSTRUCTION.

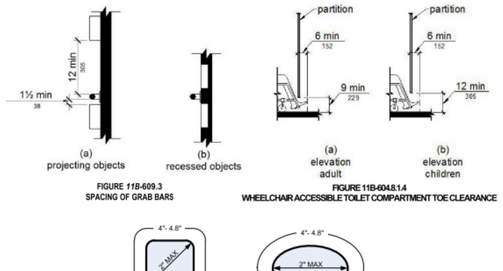

(a) projecting objects (b) recessed objects (a) elevation adult (b) elevation children

FIGURE *11B*-609.3
SPACING OF GRAB BARS

FIGURE 11B-604.8.1.4
WHEELCHAIR ACCESSIBLE TOILET COMPARTMENT TOE CLEARANCE

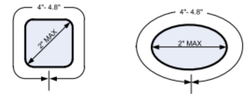

FIGURE 11B-609.2.2
GRAB BAR NON-CIRCULAR CROSS SECTION

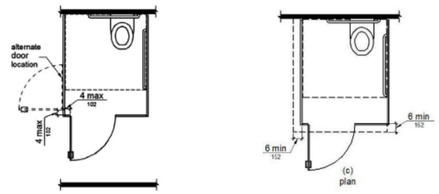

FIGURE 11B-604.8.1.2
WHEELCHAIR ACCESSIBLE TOILET COMPARTMENT DOORS

FIGURE *11B*-604.8.1.4
WHEELCHAIR ACCESSIBLE TOILET COMPARTMENT TOE CLEARANCE

THESE DIAGRAMS ILLUSTRATE THE SPECIFIC REQUIREMENTS OF THESE REGULATIONS AND ARE INTENDED ONLY AS AN AID FOR BUILDING DESIGN AND CONSTRUCTION.

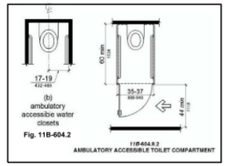

FIGURE 11B-604.8.1.1.2 - MANEUVERING SPACE WITH SIDE-OPENING DOOR

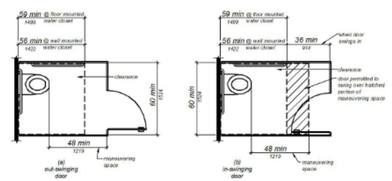

FIGURE 11B-604.8.1.1.3 - MANEUVERING SPACE WITH END-OPENING DOOR

THESE DIAGRAMS ILLUSTRATE THE SPECIFIC REQUIREMENTS OF THESE REGULATIONS AND ARE INTENDED ONLY AS AN AID FOR BUILDING DESIGN AND CONSTRUCTION.

SINK / URINAL

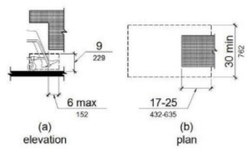

(a) elevation (b) plan

FIGURE 11B-306.2 - TOE CLEARANCE

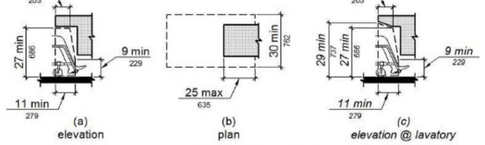

(a) elevation (b) plan (c) elevation @ lavatory

FIGURE 11B-306.3 - KNEE CLEARANCE

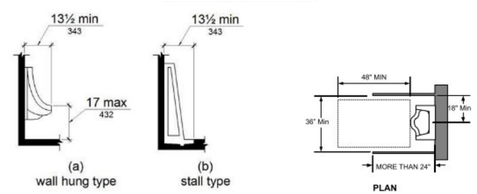

(a) wall hung type (b) stall type PLAN

FIGURE 11B-605.2 - HEIGHT AND DEPTH OF URINALS

THESE DIAGRAMS ILLUSTRATE THE SPECIFIC REQUIREMENTS OF THESE REGULATIONS AND ARE INTENDED ONLY AS AN AID FOR BUILDING DESIGN AND CONSTRUCTION.

DRINKING FOUNTAINS

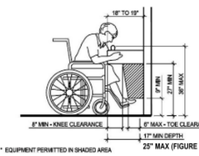

* EQUIPMENT PERMITTED IN SHADED AREA

SPOUT HEIGHT AND KNEE CLEARANCE AT DRINKING FOUNTAINS

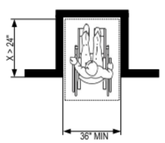

FIGURE 11B-305.7.1
MANEUVERING CLEARANCE IN AN ALCOVE, FORWARD APPROACH

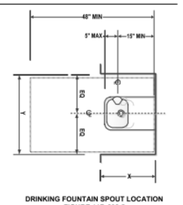

DRINKING FOUNTAIN SPOUT LOCATION
FIGURE 11B-602.5

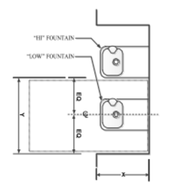

PLAN OF "HI-LOW" DRINKING FOUNTAIN

11B-602.6 WATER FLOW.
THE SPOUT SHALL PROVIDE A FLOW OF WATER 4 INCHES HIGH MINIMUM AND SHALL BE LOCATED 5 INCHES MAXIMUM FROM THE FRONT OF THE UNIT. THE ANGLE OF THE WATER STREAM SHALL BE MEASURED HORIZONTALLY RELATIVE TO THE FRONT FACE OF THE UNIT. WHERE SPOUTS ARE LOCATED LESS THAN 3 INCHES OF THE FRONT OF THE UNIT, THE ANGLE OF THE WATER STREAM SHALL BE 30 DEGREES MAXIMUM. WHERE SPOUTS ARE LOCATED BETWEEN 3 INCHES AND 5 INCHES MAXIMUM FROM THE FRONT OF THE UNIT, THE ANGLE OF THE WATER STREAM SHALL BE 15 DEGREES MAXIMUM.

11B-602.7 DRINKING FOUNTAINS FOR STANDING PERSONS.
SPOUT OUTLETS OF DRINKING FOUNTAINS FOR STANDING PERSONS SHALL BE 38 INCHES MINIMUM AND 43 INCHES MAXIMUM ABOVE THE FINISH FLOOR OR GROUND.

11B-602.9 PEDESTRIAN PROTECTION.
ALL DRINKING FOUNTAINS SHALL EITHER BE LOCATED COMPLETELY WITHIN ALCOVES, POSITIONED COMPLETELY BETWEEN WING WALLS, OR OTHERWISE POSITIONED SO AS NOT TO ENCROACH INTO PEDESTRIAN WAYS. THE PROTECTED AREA WITHIN WHICH A DRINKING FOUNTAIN IS LOCATED SHALL BE 32 INCHES WIDE MINIMUM AND 18 INCHES DEEP MINIMUM, AND SHALL COMPLY WITH SECTION 11B-305.7. WHEN USED, WING WALLS OR BARRIERS SHALL PROJECT HORIZONTALLY AT LEAST AS FAR AS THE DRINKING FOUNTAIN AND TO WITHIN 6 INCHES VERTICALLY FROM THE FLOOR OR GROUND SURFACE.

NOTE:
IF X < 15" MIN. ALCOVE DEPTH. THEN Y = 32" MIN.
IF ALCOVE DEPTH (X) IS GREATER THAN 24", THEN ALCOVE WIDTH (Y) MUST BE MINIMUM OF 36" CLEAR.

CLEAR FLOOR SPACE AT "HI-LOW" DRINKING FOUNTAIN ALCOVES

INFORMATION BULLETIN / PUBLIC - BUILDING CODE

REFERENCE NO.: LABC Sec. 11B-304,305,404 Effective: 01/01/2020
DOCUMENT NO.: P/BC 2020-086 Revised:
Previously Issued As: P/BC 2017-086

ACCESSIBILITY DETAILS FOR DOORS, MANEUVERING SPACES & ROUTES

UNLESS SPECIFICALLY STATED OTHERWISE, FIGURES ARE PROVIDED FOR INFORMATIONAL PURPOSES ONLY. (11B-104.3 FIGURES)

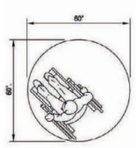

(a) 60 INCHES DIAMETER SPACE

WHEELCHAIR TURNING SPACE

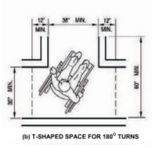

(b) T-SHAPED SPACE FOR 180° TURNS

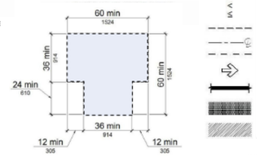

FIGURE *11B*-304.3.2
T-SHAPED TURNING SPACE

Convention	Description
36 / 914	dimension showing English units (in inches unless otherwise specified) above the line and SI units (in millimeters unless otherwise specified) below the line
6 / 152	dimension for small measurements
33-36 / 838-914	dimension showing a range with minimum - maximum
min	minimum
max	maximum
>	greater than
≥	greater than or equal to
<	less than
≤	less than or equal to
	boundary of clear floor space or maneuvering clearance
	centerline
	a permitted element or its extension
	direction of travel or approach
	a wall, floor, ceiling or other element cut in section or plan
	a highlighted element in elevation or plan
	location zone of element, control or feature

FIGURE 11B-104
GRAPHIC CONVENTION FOR FIGURES

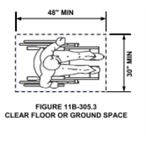

FIGURE 11B-305.3
CLEAR FLOOR OR GROUND SPACE

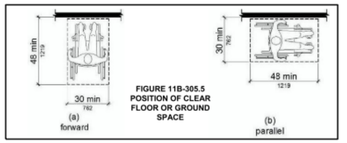

FIGURE 11B-305.5
POSITION OF CLEAR FLOOR OR GROUND SPACE

NOT FOR CONSTRUCTION

17.NOV.2021
100% DESIGN SUBMITTAL

ba
belzberg architects
2740 MAIN STREET
SANTA MONICA, CA 90405
310.453.9611
www.belzbergarchitects.com

DESCRIPTION DATE

HOLOCAUST MUSEUM LA EXPANSION

100 THE GROVE DRIVE
LOS ANGELES, CA 90036

ACCESSIBILITY DIAGRAMS

PROJECT NUMBER: 17009

G057

11/18/2021 3:11:06 PM

THESE DIAGRAMS ILLUSTRATE THE SPECIFIC REQUIREMENTS OF THESE REGULATIONS AND ARE INTENDED ONLY AS AN AID FOR BUILDING DESIGN AND CONSTRUCTION.

DOORS & MANEUVERING SPACE

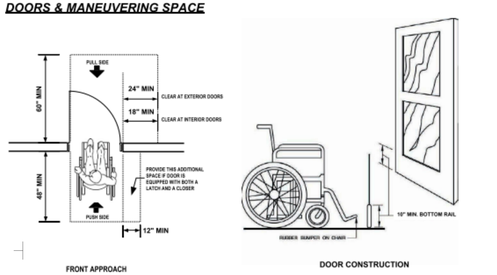

FRONT APPROACH

DOOR CONSTRUCTION

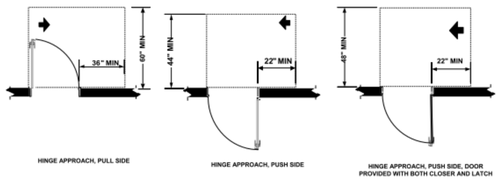

HINGE APPROACH, PULL SIDE

HINGE APPROACH, PUSH SIDE

HINGE APPROACH, PUSH SIDE, DOOR PROVIDED WITH BOTH CLOSER AND LATCH

FIGURE 11B-404.2.4.1
MANEUVERING CLEARANCES AT MANUAL SWINGING DOORS AND GATES

As a covered entity under Title II of the Americans with Disabilities Act, the City of Los Angeles does not discriminate on the basis of disability and, upon request, will provide reasonable accommodation to ensure equal access to its programs, services and activities.

THESE DIAGRAMS ILLUSTRATE THE SPECIFIC REQUIREMENTS OF THESE REGULATIONS AND ARE INTENDED ONLY AS AN AID FOR BUILDING DESIGN AND CONSTRUCTION.

DOORS & MANEUVERING SPACE

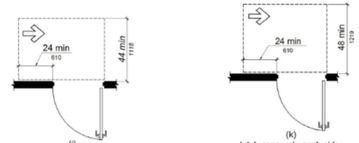

FIGURE 11B-404.2.4.1—continued
MANEUVERING CLEARANCES AT MANUAL SWINGING DOORS AND GATES

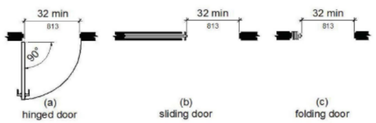

FIGURE 11B-404.2.3
CLEAR WIDTH OF DOORWAYS

TABLE 11B-404.2.3
MANEUVERING CLEARANCES AT MANUAL SWINGING DOORS AND GATES

TYPE OF USE		MINIMUM MANEUVERING CLEARANCE	
APPROACH DIRECTION	DOOR or GATE SIDE	PERPENDICULAR TO DOORWAY	PARALLEL TO DOORWAY (beyond latch side unless noted)
From front	Pull	60 inches	18 inches
From front	Push	48 inches	0 inches
From hinge side	Pull	60 inches	36 inches
From hinge side	Push	44 inches	22 inches
From latch side	Pull	60 inches	24 inches
From latch side	Push	44 inches	24 inches

1. ADD 12 INCHES IF CLOSER AND LATCH ARE PROVIDED.
2. ADD 4 INCHES IF CLOSER AND LATCH ARE PROVIDED.
3. BEYOND HINGE SIDE.
4. ADD 4 INCHES IF CLOSER IS PROVIDED.
5. ADD 6 INCHES AT EXTERIOR SIDE OF EXTERIOR DOORS.

As a covered entity under Title II of the Americans with Disabilities Act, the City of Los Angeles does not discriminate on the basis of disability and, upon request, will provide reasonable accommodation to ensure equal access to its programs, services and activities.

THESE DIAGRAMS ILLUSTRATE THE SPECIFIC REQUIREMENTS OF THESE REGULATIONS AND ARE INTENDED ONLY AS AN AID FOR BUILDING DESIGN AND CONSTRUCTION.

DOORS & MANEUVERING SPACE

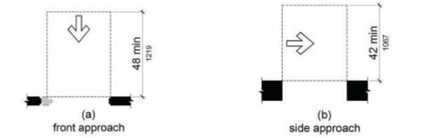

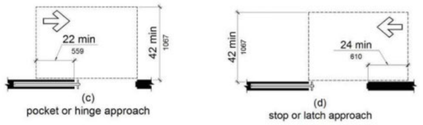

FIGURE 11B-404.2.4.2
MANEUVERING CLEARANCES AT DOORWAYS WITHOUT DOORS, SLIDING DOORS, GATES, AND FOLDING DOORS

TABLE 11B-404.2.4.2
MANEUVERING CLEARANCES AT DOORWAYS WITHOUT DOORS OR GATES MANUAL SLIDING DOORS AND MANUAL FOLDING DOORS

	MINIMUM MANEUVERING CLEARANCE	
Approach direction	Perpendicular to doorway	Parallel to doorway (beyond stop/latch side unless noted)
From Front	48 inches	0 inches
From Side[1]	42 inches	0 inches
From pocket/hinge side	42 inches	22 inches
From stop/latch side	42 inches	24 inches

1. Doorway with no door only.
2. Beyond pocket/hinge side

As a covered entity under Title II of the Americans with Disabilities Act, the City of Los Angeles does not discriminate on the basis of disability and, upon request, will provide reasonable accommodation to ensure equal access to its programs, services and activities.

THESE DIAGRAMS ILLUSTRATE THE SPECIFIC REQUIREMENTS OF THESE REGULATIONS AND ARE INTENDED ONLY AS AN AID FOR BUILDING DESIGN AND CONSTRUCTION.

DOORS & MANEUVERING SPACE

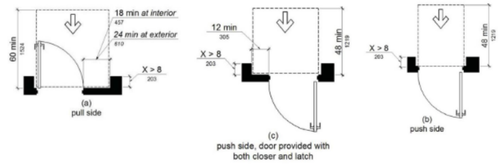

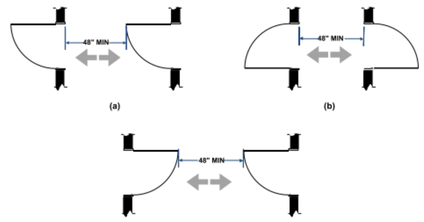

FIGURE 11B-404.2.6
DOORS IN SERIES AND GATES IN SERIES

As a covered entity under Title II of the Americans with Disabilities Act, the City of Los Angeles does not discriminate on the basis of disability and, upon request, will provide reasonable accommodation to ensure equal access to its programs, services and activities.

THESE DIAGRAMS ILLUSTRATE THE SPECIFIC REQUIREMENTS OF THESE REGULATIONS AND ARE INTENDED ONLY AS AN AID FOR BUILDING DESIGN AND CONSTRUCTION.

ACCESSIBLE ROUTES

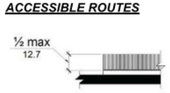

FIGURE 11B-302.2
CARPET PILE HEIGHT

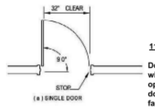

11B-404.2.3

Door openings shall provide a clear width of 32 inches minimum. Clear openings of doorways with swinging doors shall be measured between the face of the door and the stop, with the door open 90 degrees. Openings more than 24 inches deep shall provide a clear opening of 36 inches minimum. There shall be no projections into the required clear opening width lower than 34 inches above the finish floor or ground. Projections into the clear opening width between 34 inches and 80 inches above the finish floor or ground shall not exceed 4 inches.

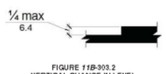

FIGURE 11B-303.2
VERTICAL CHANGE IN LEVEL

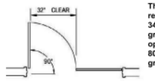

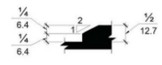

FIGURE 11B-303.3
BEVELED CHANGE IN LEVEL

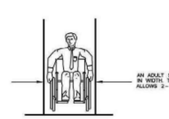

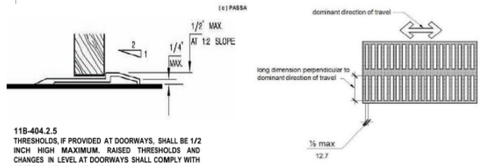

11B-404.2.5
THRESHOLDS, IF PROVIDED AT DOORWAYS, SHALL BE 1/2 INCH HIGH MAXIMUM. RAISED THRESHOLDS AND CHANGES IN LEVEL AT DOORWAYS SHALL COMPLY WITH SECTIONS 11B-302 AND 11B-303.

FIGURE 11B-302.3
ELONGATED OPENINGS IN FLOOR OR GROUND SURFACES

As a covered entity under Title II of the Americans with Disabilities Act, the City of Los Angeles does not discriminate on the basis of disability and, upon request, will provide reasonable accommodation to ensure equal access to its programs, services and activities.

THESE DIAGRAMS ILLUSTRATE THE SPECIFIC REQUIREMENTS OF THESE REGULATIONS AND ARE INTENDED ONLY AS AN AID FOR BUILDING DESIGN AND CONSTRUCTION.

ACCESSIBLE ROUTES

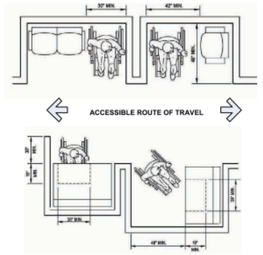

11B-403.5.1
SEE CLEAR WIDTH AND EXCEPTIONS REQUIREMENTS

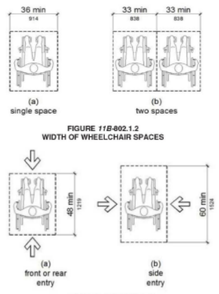

FIGURE 11B-802.1.2
WIDTH OF WHEELCHAIR SPACES

FIGURE 11B-802.1.3
DEPTH OF WHEELCHAIR SPACES

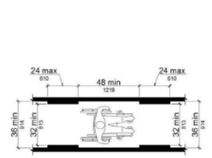

FIGURE 11B-403.5.1
CLEAR WIDTH OF AN ACCESSIBLE ROUTE

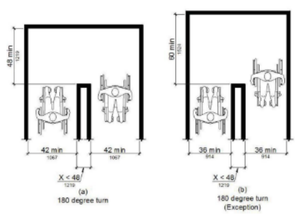

FIGURE 11B-403.5.2
CLEAR WIDTH AT TURN

As a covered entity under Title II of the Americans with Disabilities Act, the City of Los Angeles does not discriminate on the basis of disability and, upon request, will provide reasonable accommodation to ensure equal access to its programs, services and activities.

INFORMATION BULLETIN / PUBLIC - BUILDING CODE
REFERENCE NO: Various
DOCUMENT NO: P/BC 2020-143
PREVIOUSLY ISSUED AS: 2017-143
EFFECTIVE: 01-01-2020
REVISED:

GENERAL NOTES FOR COMMERCIAL ACCESSIBILITY

NOTE: Code references are to the 2020 edition of the Los Angeles Building Code

The State of California delegates authority to the local jurisdiction to ensure compliance with Title 24, Part 2 of the California Code of Regulations. The following general notes indicate specific areas of Title 24, Part 2 which are applicable to your project. Please be aware that the owner(s) of the building and his/her consultants are responsible for compliance with the most current Federal Regulations contained in the Americans with Disabilities Act (ADA) and Fair Housing Act (FHA). Where the ADA & FHA requirements exceed those contained in Title 24, Part 2, it is the responsibility of the owners and their consultants to ensure compliance with the most current ADA & FHA regulations, as the City is not authorized to review plans or inspect projects for ADA & FHA compliance.

The following, applicable, general notes shall be provided on the plans.

A. APPLICATION AND ADMINISTRATION

1. Public accommodations shall maintain in operable working condition those features of facilities and equipment that are required to be accessible to and useable by persons with disabilities. Isolated or temporary interruptions in service or accessibility due to maintenance or repairs shall be permitted. **§11B-108**

B. BUILDING BLOCKS

FLOOR OR GROUND SURFACES

1. Floor and ground surfaces shall be stable, firm, and slip resistant. **§11B-302.1**
2. Carpet or carpet tile shall be securely attached and shall have a firm cushion, pad, or backing or no cushion or pad. Carpet or carpet tile shall have a level loop, textured loop, level cut pile, or level cut/uncut pile texture. Pile height shall be ½ inch maximum. **§11B-302.2, Figure 11B-302.2**

CHANGES IN LEVEL

3. Vertical changes in level for floor or ground surfaces may be ¼ inch high maximum and without edge treatment. Changes in level greater than ¼ inch and not exceeding ½ inch in height shall be beveled with a slope not steeper than 1:2. **§11B-303, Figures 11B-303.2 & 11B-303.3**
4. Changes in level greater than ½ inch in height shall be ramped and shall comply with the requirements of 11B-405 Ramps or 11B-406 Curb Ramps as applicable. **§11B-303**
5. Abrupt changes in level exceeding 4 inches in a vertical dimension between walks, sidewalks or other pedestrian ways and adjacent surfaces or features shall be identified by warning curbs at least 6 inches in height above the walk or sidewalk surface or by guards or handrails with a guide rail centered 2 inches minimum and 4 inches maximum above the surface of the walk or sidewalk. These requirements do not apply between a walk or sidewalk and an adjacent street or driveway. **§11B-303.5**

TURNING SPACE

6. Circular turning spaces shall be a space of 60 inches diameter minimum and may include knee and toe clearance complying with 11B-306 Knee and Toe Clearance. **§11B-304.3.1**
7. T-Shaped turning spaces shall be a T-shaped space within a 60 inch square minimum with arms and base 36 inches wide minimum. Each arm of the T shall be clear of obstructions 12 inches minimum in each direction and the base shall be clear of obstructions 24 inches minimum. **§11B-304.3.2, Figure 11B-304.3.2**

As a covered entity under Title II of the Americans with Disabilities Act, the City of Los Angeles does not discriminate on the basis of disability and, upon request, will provide reasonable accommodation to ensure equal access to its programs, services and activities.

KNEE AND TOE CLEARANCE

8. For lavatories and built-in dining and work surfaces required to be accessible, toe clearance shall be provided that is 30 inches in width and 9 inches in height above the finish floor or ground for a depth of 19 inches minimum. **§11B-306.2.1**
9. Toe clearance shall extend 19 inches maximum under lavatories for toilet and bathing facilities and 25 inches maximum under other elements. **§11B-306.2.2**
10. At lavatories in toilet and bathing facilities, knee clearance shall be provided that is 30 inches in width for a depth of 11 inches at 9 inches above the finish floor or ground and for a depth of 8 inches at 27 inches above the finish floor or ground increasing to 29 inches high minimum above the finish floor or ground at the front edge of a counter with a built-in lavatory or at the front edge of a wall-mounted lavatory fixture. **§11B-306.3.3, Figure 11B-306.3(c)**
11. At dining and work surfaces required to be accessible, knee clearance shall be provided that is 30 inches in width at 27 inches above the finish floor or ground for a depth of at least 19 inches. **§11B-306.3**

PROTRUDING OBJECTS

12. Except for handrails, objects with leading edges more than 27 inches and less than 80 inches above the finish floor or ground shall protrude no more than 4 inches horizontally into the circulation path. Handrails may protrude 4½ inches maximum. **§11B-307.2, Figure 11B-307.2**
13. Freestanding objects mounted on posts or pylons shall overhang circulation paths no more than 12 inches when located from 27 to 80 inches above the finish floor or ground. **§11B-307.3, Figure 11B-307.3(a)**
14. Protruding objects shall not reduce the clear width required for accessible routes. **§11B-307.5**
15. Lowest edge of a sign or other obstruction, when mounted between posts or pylons separated with a clear distance greater than 12 inches, shall be less than 27 inches or more than 80 inches above the finish floor or ground. **§11B-307.3, Figure 11B-307.3(b)**
16. Vertical clearance shall be at least 80 inches high on circulation paths except at door closers and door stops, which may be 78 inches minimum above the finish floor or ground. **§11B-307.4**
17. Guardrails or other barriers with a leading edge located 27 inches maximum above the finish floor or ground shall be provided where the vertical clearance on circulation paths is less than 80 inches high. **§11B-307.4, Figure 11B-307.4**
18. Where a guy support is used within either the width of a circulation path or 24 inches maximum outside of a circulation path, a vertical guy brace, sidewalk guy or similar device shall be used to prevent a hazard or an overhead obstruction. **§11B-307.4.1, Figure 11B-307.4.1**

REACH RANGES

19. Electrical controls and switches intended to be used by the occupant of a room or area to control lighting and receptacle outlets, appliances or cooling, heating and ventilating equipment shall be located within allowable reach ranges. Low reach shall be measured to the bottom of the outlet box and high reach shall be measured to the top of the outlet box. **§11B-308.1.1**
20. Electrical receptacle outlets on branch circuits of 30 amperes or less and communication system receptacles shall be located within allowable reach ranges. Low reach shall be measured to the bottom of the outlet box and high reach shall be measured to the top of the outlet box. **§11B-308.1.2.**
21. High forward reach that is unobstructed shall be 48 inches maximum and the low forward reach shall be 15 inches minimum above the finish floor or ground. **§11B-308.2.1, Figure 11B-308.2.1**
22. High forward reach shall be 48 inches maximum where the reach depth is 20 inches or less and 44 inches maximum where the reach depth exceeds 20 inches. High forward reach shall not exceed 25 inches in depth. **§11B-308.2.2, Figure 11B-308.2.2**
23. High side reach shall be 48 inches maximum and the low side reach shall be 15 inches minimum above the finish floor where the side reach is unobstructed or the depth of any obstruction does not exceed 10 inches. **§11B-308.3.1, Figure 11B-308.3.1**

As a covered entity under Title II of the Americans with Disabilities Act, the City of Los Angeles does not discriminate on the basis of disability and, upon request, will provide reasonable accommodation to ensure equal access to its programs, services and activities.

NOT FOR CONSTRUCTION

17.NOV.2021
100% DESIGN SUBMITTAL

belzberg architects
2740 MAIN STREET
SANTA MONICA, CA 90405
310.453.9611
www.belzbergarchitects.com

#	DESCRIPTION	DATE

HOLOCAUST MUSEUM LA EXPANSION

100 THE GROVE DRIVE
LOS ANGELES, CA 90036

ACCESSIBILITY DIAGRAMS

PROJECT NUMBER: 17009

G058

11/18/2021 3:11:06 PM

24. High side reach shall be 46 inches maximum above the finish floor or ground where the high side reach is over an obstruction more than 10 inches but not more than 24 inches in depth. **§11B-308.3.2, Figure 11B-308.3.2**
25. Obstructions for high side reach shall not exceed 34 inches in height and 24 inches in depth. **§11B-308.3.2, Figure 11B-308.3.2**
26. Obstructed high side reach for the top of washing machines and clothes dryers shall be permitted to be 36 inches maximum above the finish floor. **§11B-308.3.2**
27. Obstructed high side reach for the operable parts of fuel dispensers shall be permitted to be 54 inches maximum measured from the surface of the vehicular way where fuel dispensers are installed on existing curbs. **§11B-308.3.2**

OPERABLE PARTS

28. Operable parts shall be operable with one hand and shall not require tight grasping, pinching, or twisting of the wrist. Force required to activate operable parts shall be 5 pounds maximum. **§11B-309.4**

C. ACCESSIBLE ROUTES

DETECTABLE WARNINGS AND DETECTABLE DIRECTIONAL TEXTURE

1. Detectable warning surfaces shall be yellow and approximate FS 33538 of Federal Standard 595C. **§11B-705.1.1.3.1**
2. Detectable warning surfaces shall provide a 70 percent minimum visual contrast with adjacent walking surfaces. Contrast in percent shall be determined by:

   Contrast percent = [(B1-B2)/B1] x 100 where

   B1 = light reflectance value (LRV) of the lighter area and

   B2 = light reflectance value (LRV) of the darker area

   §11B-705.1.1.3.2 (See exception)

DOORS, DOORWAYS, AND GATES

3. Doors, doorways, and gates providing user passage shall be provided in accordance with 11B-206.5 Doors, Doorways, and Gates. **§11B-206.5**
4. Doors, doorways and gates that are part of an accessible route shall comply with 11B-404 Doors, Doorways, and Gates. **§11B-404.1**
5. Door openings shall provide a clear width of 32 inches minimum. Clear openings of doorways with swinging doors shall be measured between the face of the door and the stop, with the door open 90 degrees. Openings more than 24 inches deep shall provide a clear opening of 36 inches minimum. There shall be no projections into the required clear opening width lower than 34 inches above the finish floor or ground. Projections into the clear opening width between 34 inches and 80 inches above the finish floor or ground shall not exceed 4 inches. **§11B-404.2.3**
6. Swinging doors and gates shall have maneuvering clearances complying with Table 11B-404.2.4.1. **§11B-404.2.4.1**
7. Doorways less than 36 inches wide without doors or gates, sliding doors, or folding doors shall have maneuvering clearances complying with Table 11B-404.2.4.2. **§11B-404.2.4.2**
8. Maneuvering clearances for forward approach shall be provided when any obstruction within 18 inches of the latch side an interior doorway, or within 24 inches of the latch side of an exterior doorway, projects more than 8 inches beyond the face of the door, measured perpendicular to the face of the door or gate. **§11B-404.2.4.3**
9. Thresholds, if provided at doorways, shall be ½ inch high maximum. Raised thresholds and changes in level at doorways shall comply with 11B-302 Floor or Ground Surfaces and 11B-303 Changes in Level. **§11B-404.2.5**
10. Handles, pulls, latches, locks, and other operable parts on doors and gates shall comply with 11B-309.4 Operation. Operable parts of such hardware shall be 34 inches minimum and 44 inches maximum above

As a covered entity under Title II of the Americans with Disabilities Act, the City of Los Angeles does not discriminate on the basis of disability and, upon request, will provide reasonable accommodation to ensure equal access to its programs, services and activities.

the finish floor or ground. Where sliding doors are in the fully open position, operating hardware shall be exposed and usable from both sides. **§11B-404.2.7**

11. The force for pushing or pulling open a door or gate other than fire doors shall be as follows: **§11B-404.2.9**
    a. Interior hinged doors and gates: 5 pounds maximum.
    b. Sliding or folding doors: 5 pounds maximum.
    c. Required fire doors: the minimum opening force allowable by the appropriate administrative authority, not to exceed 15 pounds.
    d. Exterior hinged doors: 5 pounds maximum.
12. Swinging door and gate surfaces within 10 inches of the finish floor or ground measured vertically shall have a smooth surface on the push side extending the full width of the door or gate. Parts creating horizontal or vertical joints in these surfaces shall be within 1/16 inch of the same plane as the other and be free of sharp or abrasive edges. Cavities created by added kick plates shall be capped. **§11B-404.2.10**

RAMPS

13. Ramp runs shall have a running slope not steeper than 1:12 (8.33%). **§11B-405.2**
14. Cross slope of ramp runs shall not be steeper than 1:48 (2.083%). **§11B-405.3**
15. Floor or ground surfaces of ramp runs shall comply with 11B-302 Floor or Ground Surfaces. Changes in level other than the running slope and cross slope are not permitted on ramp runs. **§11B-405.4**
16. The clear width of a ramp run shall be 48 inches minimum. **§11B-405.5**
17. The rise for any ramp run shall be 30 inches maximum. **§11B-405.6**
18. Ramps shall have landings at the top and the bottom of each ramp run. **§11B-405.7**
19. Landings shall comply with 11B-302 Floor or Ground Surfaces. Changes in level are not permitted. **§11B-405.7.1**
20. The landing clear width shall be at least as wide as the widest ramp run leading to the landing. **§11B-405.7.2**
21. Top landings shall be 60 inches wide minimum. **§11B-405.7.2.1**
22. The landing clear length shall be 60 inches long minimum. **§11B-405.7.3**
23. Bottom landings shall extend 72 inches minimum in the direction of ramp run. **§11B-405.7.3.1**
24. Ramps that change direction between runs at landings shall have a clear landing 60 inches minimum by 72 inches minimum in the direction of downward travel from the upper ramp run. **§11B-405.7.4**
25. Where doorways are located adjacent to a ramp landing, maneuvering clearances required by 11B-404.2.4 and 11B-404.3.2 shall be permitted to overlap the required landing area. Doors, when fully open, shall not reduce the required ramp landing width by more than 3 inches. Doors, in any position, shall not reduce the minimum dimension of the ramp landing to less than 42 inches. **§11B-405.7.5**
26. Ramp runs shall have compliant handrails per 11B-505 Handrails. **§11B-405.8**
27. Edge protection complying with 11B-405.9.2 Curb or Barrier shall be provided on each side of ramp runs and at each side of ramp landings. **§11B-405.9 (See exceptions)**
28. A curb or barrier shall be provided that prevents the passage of a 4 inch diameter sphere, where any portion of the sphere is within 4 inches of the finish floor or ground surface. To prevent wheel entrapment, the curb or barrier shall provide a continuous and uninterrupted barrier along the length of the ramp. **§11B-405.9.2**
29. Landings subject to wet conditions shall be designed to prevent the accumulation of water. **§11B-405.10**

HANDRAILS

30. Handrails shall be provided on both sides of stairs and ramps. **§11B-505.2**
31. Handrails shall be continuous within the full length of each stair flight or ramp run. Inside handrails on switchback or dogleg stairs and ramps shall be continuous between flights or runs. **§11B-505.3**
32. Top of gripping surfaces of handrails shall be 34 inches minimum and 38 inches maximum vertically above walking surfaces, stair nosings, and ramp surfaces. Handrails shall be at a consistent height above walking surfaces, stair nosings, and ramp surfaces. **§11B-505.4**

As a covered entity under Title II of the Americans with Disabilities Act, the City of Los Angeles does not discriminate on the basis of disability and, upon request, will provide reasonable accommodation to ensure equal access to its programs, services and activities.

33. Clearance between handrail gripping surfaces and adjacent surfaces shall be 1½ inches minimum. Handrails may be located in a recess if the recess is 3 inches maximum deep and 18 inches minimum clear above the top of the handrail. **§11B-505.5**
34. Handrail gripping surfaces shall be continuous along their length and shall not be obstructed along their tops or sides. The bottoms of handrail gripping surfaces shall not be obstructed for more than 20 percent of their length. Where provided, horizontal projections shall occur 1½ inches minimum below the bottom of the handrail-gripping surface. **§11B-505.6**
35. Handrail gripping surfaces with a circular cross section shall have an outside diameter of 1¼ inches minimum and 2 inches maximum. **§11B-505.7.1**
36. Handrail gripping surfaces with a non-circular cross section shall have a perimeter dimension of 4 inches minimum and 6¼ inches maximum, and a cross-section dimension of 2¼ inches maximum. **§11B-505.7.2**
37. Handrail gripping surfaces shall extend beyond and in the same direction of stair flights and ramp runs in accordance with Section 11B-505.10 Handrail Extensions. **§11B-505.10**
38. Ramp handrails shall extend horizontally above the landing for 12 inches minimum beyond the top and bottom of ramp runs. Extensions shall return to a wall, guard, or the landing surface, or shall be continuous to the handrail of an adjacent ramp run. **§11B-505.10.1**
39. At the top of a stair flight, handrails shall extend horizontally above the landing for 12 inches minimum beginning directly above the first riser nosing. Extensions shall return to a wall, guard, or the landing surface, or shall be continuous to the handrail of an adjacent stair flight. **§11B-505.10.2**
40. At the bottom of a stair flight, handrails shall extend at the slope of the stair flight for a horizontal distance equal to one tread depth beyond the last riser nosing. The horizontal extension of a handrail shall be 12 inches long minimum and a height equal to that of the sloping portion of the handrail as measured above the stair nosings. Extension shall return to a wall, guard, or the landing surface, or shall be continuous to the handrail of an adjacent stair flight. **§11B-505.10.3**

STAIRWAYS

41. A stair is defined as a change in elevation, consisting of one or more risers. **§11B-202**
42. All steps on a flight of stairs shall have uniform riser heights and uniform tread depths. Risers shall be 4 inches high minimum and 7 inches high maximum. Treads shall be 11 inches deep minimum. Curved stairways with winder treads are permitted at stairs which are not part of a required means of egress. (See exception) **§11B-504.2**
43. Open risers are not permitted. **§11B-504.3 (See exceptions)**
44. Interior stairs shall have the upper approach and lower tread marked by a stripe providing clear visual contrast. Exterior stairs shall have the upper approach and all treads marked by a stripe providing clear visual contrast. The stripe shall be a minimum of 2 inches wide to a maximum of 4 inches wide placed parallel to, and not more than 1 inch from, the nose of the step or upper approach. The stripe shall extend the full width of the step or upper approach and shall be of material that is at least as slip resistant as the other treads of the stair. A painted stripe shall be acceptable. Grooves shall not be used to satisfy this requirement. **§11B-504.4.1**
45. The radius of curvature at the leading edge of the tread shall be ½ inch maximum. Nosings that project beyond risers shall have the underside of the leading edge curved or beveled. Risers shall be permitted to slope under the tread at an angle of 30 degrees maximum from vertical. The permitted projection of the nosing shall extend 1¼ inches maximum over the tread below. **§11B-504.5 (See exception for existing buildings)**
46. Stairs shall have handrails complying with Section 11B-505 Handrails. **§11B-504.6**
47. Stair treads and landings subject to wet conditions shall be designed to prevent the accumulation of water. **§11B-504.7**
48. Floor identification signs required by Chapter 10, Section 1022.9 complying with Sections 11B-703.1 Signs General, 11B-703.2 Raised Characters, 11B-703.3 Braille and 11B-703.5 Visual Characters shall be located at the landing of each floor level, placed adjacent to the door on the latch side, in all enclosed stairways in buildings two or more stories in height to identify the floor level. At the exit discharge level, the sign shall

As a covered entity under Title II of the Americans with Disabilities Act, the City of Los Angeles does not discriminate on the basis of disability and, upon request, will provide reasonable accommodation to ensure equal access to its programs, services and activities.

include a raised five pointed star located to the left of the identifying floor level. The outside diameter of the star shall be the same as the height of the raised characters. **§11B-504.8**

CURB RAMPS, BLENDED TRANSITIONS AND ISLANDS

49. Perpendicular ramp runs shall have a running slope not steeper than 1:12 (8.33%). **§11B-406.2.1**
50. For perpendicular ramps, where provided, curb ramp flares shall not be steeper than 1:10. **§11B-406.2, Figure 11B-406.2.2**
51. The running slope of the curb ramp segments shall be in-line with the direction of sidewalk travel. Ramp runs shall have a running slope not steeper than 1:12 (8.33%). **§11B-406.3.1, Figure 11B-406.3.2**
52. A turning space 48 inches minimum by 48 inches minimum shall be provided at the bottom of the curb ramp. The slope of the turning space in all directions shall be 1:48 maximum (2.083%). **§11B-406.3.2**
53. Blended transition ramps hall have a running slope not steeper than 1:20 (5%). **§11B-406.4.1**
54. Curb ramps and the flared sides of curb ramps shall be located so that they do not project into vehicular traffic lanes, parking spaces, or parking access aisles. Curb ramps at marked crossings shall be wholly contained within the markings, excluding any flared sides. **§11B-406.5.1**
55. The clear width of curb ramp runs (excluding any flared sides), blended transitions, and turning spaces shall be 48 inches minimum. **§11B-406.5.2**
56. Landings shall be provided at the tops of curb ramps and blended transitions (parallel curb ramps shall not be required to comply). The landing clear length shall be 48 inches minimum. The landing clear width shall be at least as wide as the curb ramp, excluding any flared sides, or the blended transition leading to the landing. The slope of the landing in all directions shall be 1:48 (2.083%) maximum. **§11B-406.5.3**
57. Grade breaks at the top and bottom of curb ramp runs shall be perpendicular to the direction of the ramp run. Grade breaks shall not be permitted on the surface of ramp runs and turning spaces. Surface slopes that meet at grade breaks shall be flush. **§11B-406.5.6**
58. The cross slope of curb ramps and blended transitions shall be 1:48 (2.083%) maximum. **§11B-406.5.7**
59. Counter slopes of adjoining gutters and road surfaces immediately adjacent to and within 24 inches of the curb ramp shall not be steeper than 1:20 (5%). The adjacent surfaces at transitions at curb ramps to walks, gutters, and streets shall be at the same level. **§11B-406.5.8**
60. The bottom of diagonal curb ramps shall have a clear space 48 inches minimum outside active traffic lanes of the roadway. Diagonal curb ramps provided at marked crossings shall provide the 48 inches minimum clear space within the markings. **§11B-406.5.9**
61. Curb ramps and blended transitions shall have detectable warnings complying with 11B-705 Detectable Warnings. **§11B-406.5.12**
62. Raised islands in crossings shall be cut through level with the street or have curb ramps at both sides. The clear width of the accessible route at islands shall be 60 inches wide minimum. Where curb ramps are provided, they shall comply with 11B-406 Curb Ramps, Blended Transitions and Islands. Landings complying with 11B-406.5.3 Landings and the accessible route shall be permitted to overlap. Islands shall have detectable warnings complying with 11B-705 Detectable Warnings and Detectable Directional Texture. **§11B-406.6, Figure 11B-406.6**

D. GENERAL SITE AND BUILDING ELEMENTS

1. Where parking spaces are provided, accessible parking spaces shall be provided in number and kind required per Section 11B-208 Parking Spaces. **§11B-208.1**
2. Where passenger loading zones, drop-off zones, and/or bus stops are provided, accessible passenger loading zones, drop-off zones, and/or bus stops are required.
3. Where Electric vehicle charging stations (EVCS) are provided, they shall comply with Section 11B-812 as required by Section 11B-228.3.
4. EVCS complying with Section 11B-812 that serve a particular building or facility shall be located on an accessible route to an entrance complying with Section 11B-206.4. Where EVCS do not serve a particular building or facility, EVCS complying with Section 11B-812 shall be located on an accessible route to an accessible pedestrian entrance of the EV charging facility.

As a covered entity under Title II of the Americans with Disabilities Act, the City of Los Angeles does not discriminate on the basis of disability and, upon request, will provide reasonable accommodation to ensure equal access to its programs, services and activities.

E. PLUMBING FIXTURES AND FACILITIES

DRINKING FOUNTAINS

1. Drinking fountains shall comply with Sections 11B-307 Protruding Objects and 11B-602 General Requirements. **§11B-602.1**
2. Units shall have a clear floor or ground space complying with Section 11B-305 Clear Floor or Ground Space positioned for a forward approach and centered on the unit. Knee and toe clearance complying with Section 11B-306 Knee and Toe Clearance shall be provided. **§11B-602.2**
3. Spout outlets shall be 36 inches maximum above the finish floor or ground. **§11B-602.4**
4. The spout shall be located 15 inches minimum from the vertical support and 5 inches maximum from the front edge of the unit, including bumpers. **§11B-602.5**
5. The spout shall provide a flow of water 4 inches high minimum and shall be located 5 inches maximum from the front of the unit. The angle of the water stream shall be measured horizontally relative to the front face of the unit. Where spouts are located less than 3 inches from the front of the unit, the angle of the water stream shall be 30 degrees maximum. Where spouts are located between 3 inches and 5 inches maximum from the front of the unit, the angle of the water stream shall be 15 degrees maximum. **§11B-602.6**
6. Spout outlets of drinking fountains for standing persons shall be 38 inches minimum and 43 inches maximum above the finish floor or ground. **§11B-602.7**
7. Wall and post-mounted cantilevered drinking fountains shall be 18 inches minimum and 19 inches maximum in depth. **§11B-602.8**
8. All drinking fountains shall either be located completely within alcoves, positioned completely between wing walls, or otherwise positioned so as not to encroach into pedestrian ways. The protected area within such a drinking fountain is located shall be 32 inches wide minimum and 18 inches deep minimum, and shall comply with Section 11B-305.7 Maneuvering Clearance. When used, wing walls or barriers shall protect horizontally at least as far as the drinking fountain and to within 6 inches vertically from the floor or ground surface. **§11B-602.9**

TOILET AND BATHING ROOM CLEARANCES

9. Doors to unisex toilet rooms and unisex bathing rooms shall have privacy latches. **§11B-213.2.1**
10. Mirrors located above the lavatories or countertops shall be installed within the bottom edge of the reflecting surface 40 inches maximum above the finish floor or ground. Mirrors not located above the lavatories or countertops shall be installed with the bottom edge of the reflecting surface 35 inches maximum above the finish floor or ground. **§11B-603.3**
11. Coat hooks shall be located within one of the reach ranges specified in Section 11B-308. Shelves shall be located 40 inches minimum and 48 inches maximum above the finish floor. Medicine cabinets shall be located with a usable shelf no higher than 44 inches maximum above the finish floor. **§11B-603.4**
12. Where towel or sanitary napkin dispensers, waste receptacles, or other accessories are provided in toilet facilities, at least one of each type shall be located on an accessible route. All operable parts, including coin slots, shall be 40 inches maximum above the finish floor. Baby changing stations are not required to comply with Section 11B-603.5 (See exception) **§11B-603.5**

WATER CLOSETS AND TOILET COMPARTMENTS

13. Flush controls shall be hand operated or automatic. Hand operated flush controls shall comply with Section 11B-309.4 Operation except they shall be located 44 inches maximum above the floor. Flush controls shall be located on the open side of the water closet except in ambulatory accessible compartments complying with Section 11B-604.8.2 Ambulatory Accessible Compartments. **§11B-604.6**
14. Toilet paper dispensers shall comply with Section 11B-309.4 Operation and shall be 7 inches minimum and 9 inches maximum in front of the water closet measured to the centerline of the dispenser. The outlet of the dispenser shall be below the grab bar, 19 inches minimum above the finish floor and shall not be located behind the grab bars. Dispensers shall not be of a type that control delivery or that does not allow continuous paper flow. **§11B-604.7**

As a covered entity under Title II of the Americans with Disabilities Act, the City of Los Angeles does not discriminate on the basis of disability and, upon request, will provide reasonable accommodation to ensure equal access to its programs, services and activities.

15. Sanitary napkin disposal units, if provided, shall comply with Section 11B-309.4 and shall be wall mounted and located on the sidewall between the rear wall of the toilet and the toilet paper dispenser, adjacent to the toilet paper dispenser. The disposal unit shall be located below the grab bar with the opening of the disposal unit 19 inches minimum (483 mm) above the finish floor. **§11B-604.7.2**
16. Urinals shall be the stall-type or the wall-hung type with the rim 17 inches maximum above the finish floor or ground. Urinals shall be 13½ inches deep minimum measured from the outer face of the urinal rim to the back of the fixture. **§11B-605.2**
17. Flush controls shall be hand operated or automatic. Hand operated flush controls shall comply with Section 11B-309 Operable Parts except that the flush control shall be mounted at a maximum height of 44 inches above the finish floor. **§11B-605.4**
18. For lavatories and sinks, a clear floor space complying with Section 11B-305 Clear Floor or Ground Surfaces, positioned for a forward approach, and knee and toe clearance complying with Section 11B-306 Knee and Toe Clearance shall be provided. **§11B-606.2**
19. Lavatories and sinks shall be installed with the front of the higher of the rim or counter surface 34 inches maximum above the finish floor or ground. **§11B-606.3**

SIGNS RELATED TO TOILETS AND BATHING FACILITIES

20. Entrances leading to toilet rooms and bathing rooms complying with 11B-603 Toilet and Bathing Rooms shall be identified by a geometric symbol complying with 11B-703.7.2.6 Toilet and Bathing Room Geometric Symbols. Where existing toilet rooms or bathing rooms do not comply with 11B-603 Toilet and Bathing Rooms, directional signs indicating the location of the nearest compliant toilet room or bathing room within the facility shall be provided. Signs shall comply with 11B-703.5 Visual Characters and shall include the International Symbol of Accessibility complying with 11B-703.7.2.1 ISA. Where existing toilet rooms or bathing rooms do not comply with 11B-603 Toilet and Bathing Rooms, the toilet rooms or bathing rooms complying with 11B-603 Toilet and Bathing Rooms shall be identified by the International Symbol of Accessibility complying with 11B-703.7.2.1 ISA. Where clustered single user toilet rooms or bathing facilities are permitted to use exceptions to 11B-213.2 Toilet and Bathing Rooms, toilet rooms or bathing facilities complying with 11B-603 Toilet and Bathing Rooms shall be identified by the International Symbol of Accessibility complying with 11B-703.7.2.1 ISA unless all toilet rooms and bathing facilities comply with 11B-603 Toilet and Bathing Rooms. Existing buildings that have been remodeled to provide specific toilet rooms or bathing rooms for public use that comply with these building standards shall have the location of and the directions to these rooms posted in or near the building lobby or entrance on a sign complying with 11B-703.5 Visual Characters, including the International Symbol of Accessibility complying with 11B-703.7.2.1 ISA. **§11B-216.8**
21. Pictograms shall comply with the following:
    a. Pictograms shall have a field height of 6 inches minimum. Characters and Braille shall not be located in the pictogram field. **§11B-703.6.1**
    b. Pictograms and their field shall have a non-glare finish. Pictograms shall contrast with their field with either a light pictogram on a dark field or a dark pictogram on a light field. **§11B-703.6.2**
    c. Pictograms shall have text descriptors located directly below the pictogram field. Text descriptors shall comply with 11B-703.2 Raised Characters, 11B-703.3 Braille and 11B-703.4 Installation Height and Location. **§11B-703.6.3**
    d. The installation height and location of Pictogram signs shall be per **§11B-703.4.1.**
22. Symbols shall comply with the following:
    a. Doorways leading to toilet rooms and bathing rooms shall be identified by a geometric symbol complying with 11B-703.7.2.6 Toilet and Bathing Facilities Geometric Symbols. The symbol shall be mounted at 58 inches minimum and 60 inches maximum above the finish floor or ground surface measured from the centerline of the symbol. Where a door is provided, the symbol shall be mounted within 1 inch of the vertical centerline of the door. **§11B-703.7.2.6 (See exception)**
    b. A triangle symbol shall be located at entrances to men's toilet and bathing facilities and it shall be identified by an equilateral triangle, ¼ inch thick with edges 12 inches long and a vertex pointing upward. The triangle symbol shall contrast with the door, either light on a dark background or dark on a light background. **§11B-703.7.2.6.1**

As a covered entity under Title II of the Americans with Disabilities Act, the City of Los Angeles does not discriminate on the basis of disability and, upon request, will provide reasonable accommodation to ensure equal access to its programs, services and activities.

    c. A circle symbol shall be located at entrances to women's toilet and bathing facilities and it shall be identified by a circle, ¼ inch thick and 12 inches in diameter. The circle symbol shall contrast with the door, either light on a dark background or dark on a light background. **§11B-703.7.2.6.2**
    d. A combined circle and triangle symbol shall be located at entrances to unisex toilet and bathing facilities and it shall be shall be identified by a circle, ¼ inch thick and 12 inches in diameter with a ¼ inch thick triangle with a vertex pointing upward superimposed on the circle and within the 12-inch diameter. The triangle symbol shall contrast with the circle symbol, either light on a dark background or dark on a light background. The circle symbol shall contrast with the door, either light on a dark background or dark on a light background. **§11B-703.7.2.6.3**

WASHING MACHINE AND CLOTHES DRYERS

23. Washing machines and clothes dryer's operable parts must comply with Section 11B-309 Operable Parts. **§11B-611.3**
24. Top loading machines shall have the door to the laundry compartment located 36 inches maximum above the finish floor. Front loading machines shall have the bottom of the opening to the laundry compartment located 15 inches minim and 36 inches maximum above the finish floor. **§11B-611.4**

F. COMMUNICATION ELEMENTS AND FEATURES

FIRE ALARM SYSTEMS

1. Where fire alarm systems and carbon monoxide alarm systems provide audible alarm coverage, alarms shall comply with 11B-215 Fire Alarm Systems. **§11B-215.1 (See exception)**
2. Alarms in public use areas and common use areas shall comply with 702 Chapter 9, Section 907.5.2.3.1. **§11B-215.2**
3. Where employee work areas have audible alarm coverage, the wiring system shall be designed so that visible alarms complying with 702 Chapter 9, Section 907.5.2.3.2 can be integrated into the alarm system. **§11B-215.3**
4. Fire alarm systems shall have permanently installed audible and visible alarms complying with NFPA 72 (1999 or 2002 edition) (incorporated by reference, see "Referenced Standards" in Chapter 1), except that the maximum allowable sound level of audible notification appliances complying with section 4-3.2.1 of NFPA 72 (1999 edition) shall have a sound level no more than 110 dB at the minimum hearing distance from the audible appliance. In addition, alarms in guest rooms required to provide communication features shall comply with sections 4-3 and 4-4 of NFPA 72 (1999 edition) or sections 7.4 and 7.5 of NFPA 72 (2002 edition), and Chapter 9, Sections 907.5.2.1 and 907.5.2.3. **§11B-702.1**

ASSISTIVE LISTENING SYSTEMS

5. Assistive listening systems shall be provided in assembly areas, including conference and meeting rooms, used for the purpose of entertainment, educational or civic gatherings, or similar purposes. **§202, §11B-219.2**

   Note: Assembly areas include, but are not limited to, classrooms, lecture halls, courtrooms, public meeting rooms, public hearing rooms, legislative chambers, motion picture houses, auditoria, theaters, playhouses, dinner theaters, concert halls, centers for the performing arts, amphitheaters, arenas, stadiums, grandstands, or convention centers. **§202, §11B-219.2**
6. Assistive listening system shall provide an amplification system utilizing transmitters, receivers, and coupling devices to bypass the acoustical space between a sound source and a listener by means of induction loop, radio frequency, infrared, or direct-wired equipment. **§202**
7. Where a building contains more than one assembly area under one management, the total number of required receivers may be calculated using the total number of seats in the assembly areas provided that all receivers are useable with all systems. **§11B-219.3 (See exception)**
8. Twenty-five percent minimum of receivers provided for assistive listening systems, but no fewer than two, shall be hearing-aid compatible except when all seats in an assembly area are served by means of an induction loop. **§11B-219.3**

As a covered entity under Title II of the Americans with Disabilities Act, the City of Los Angeles does not discriminate on the basis of disability and, upon request, will provide reasonable accommodation to ensure equal access to its programs, services and activities.

9. When assistive-listening systems are limited to specific areas or seats, such areas or seats shall be within a 50-foot viewing distance of the stage or playing area and shall have a complete view of the stage or playing area. **§11B-219.4**
10. Permanently installed assistive-listening systems are required in areas if (1) they have fixed seating and (2a) they accommodate at least 50 persons or (2b) they have audio-amplification systems, except those used exclusively for paging and/or background music. **§11B-219.2, §11B-219.5**
11. Portable assistive-listening systems may serve more than one conference or meeting rooms if an adequate number of electrical outlets or other supplementary wiring is provided and permanently installed systems are not required. **§11B-219.5**
12. Receivers required for use with an assistive listening system shall include a 1/8 inch standard mono jack. **§11B-706.2**
13. Receivers required to be hearing aid compatible shall interface with telecoils in hearing aids through the provision of neck loops. **§11B-706.3**
14. Assistive listening systems shall be capable of providing a sound pressure level from 110 – 118 dB with a dynamic range on the volume control of 50 dB. **§11B-706.4**
15. Signal-to-noise ratio for internally generated noise in assistive listening systems shall be 18 dB minimum. **§11B-706.5**
16. Peak clipping shall not exceed 18 dB of clipping relative to the peaks of speech. **§11B-706.6**

TWO-WAY COMMUNICATION SYSTEMS

17. Two-way communication systems that are provided to gain admittance to a building or facility or to restricted areas within a building or facility shall provide both audible and visual signals. Handset cords, if provided, shall be 29 inches long minimum. **§11B-230.1, §11B-708**
18. Common use or public use system interface of communications systems between a residential dwelling unit and a site, building, or floor entrance shall include the capability of supporting voice and TTY communication with the residential dwelling unit interface. **§11B-708.4.1**
19. Residential dwelling unit system interface of communications systems between a residential dwelling unit and a site, building, or floor entrance shall include a telephone jack capable of supporting voice and TTY communication with the common use or public use system interface. **§11B-708.4.2**

TELEPHONES

20. Where coin-operated public pay telephones, coin less public pay telephones, public closed-circuit telephones, public courtesy phones, or other types of public telephones are provided, public telephones shall be provided in accordance with 11B-217 Telephones for each type of public telephone provided. For purposes of this section, a bank of telephones shall be considered to be two or more adjacent telephones. **§11B-217.1**
21. Except drive-up only public telephones, where public telephones are provided, wheelchair accessible telephones complying with 11B-704.2 shall be provided in accordance with Table 11B-217.2. **§11B-217.2**
22. All public telephones shall have volume controls complying with 11B-704.3. **§11B-217.3**
23. TTYs complying with 11B-704.4 shall be provided in accordance with 11B-217.4.
24. Where a bank of telephones in the interior of a building consists of three or more public pay telephones, at least one public pay telephone at the bank shall be provided with a shelf and an electrical outlet in accordance with 11B-704.5. **§11B-217.5 (See exception)**

As a covered entity under Title II of the Americans with Disabilities Act, the City of Los Angeles does not discriminate on the basis of disability and, upon request, will provide reasonable accommodation to ensure equal access to its programs, services and activities.

NOT FOR CONSTRUCTION

17.NOV.2021
100% DESIGN SUBMITTAL

ba
belzberg architects
2740 MAIN STREET
SANTA MONICA, CA 90405
310.453.9611
www.belzbergarchitects.com

#	DESCRIPTION	DATE

HOLOCAUST MUSEUM LA EXPANSION

100 THE GROVE DRIVE
LOS ANGELES, CA 90036

ACCESSIBILITY DIAGRAMS

PROJECT NUMBER: 17009

G059

11/8/2021 3:11:07 PM

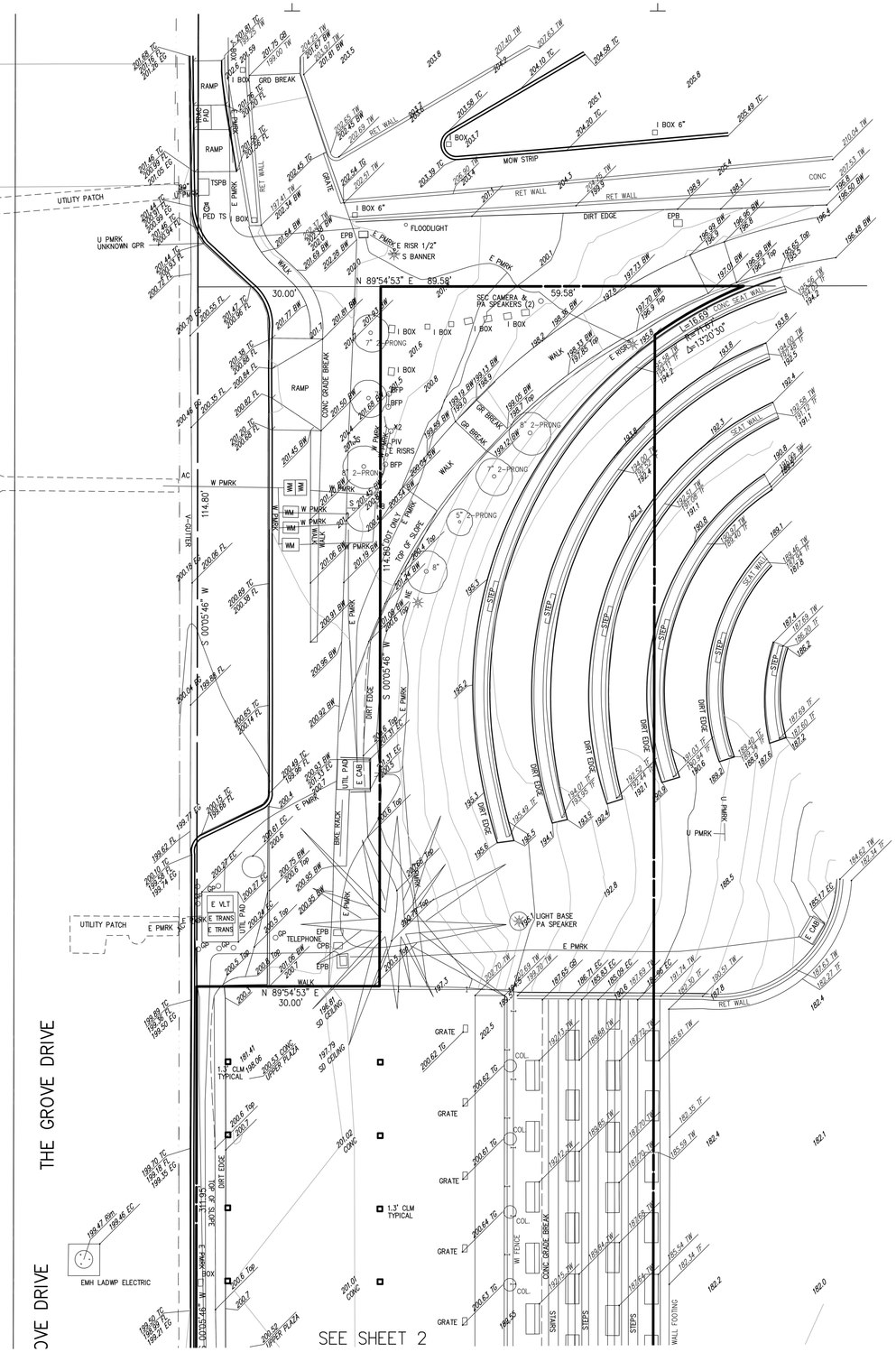
UTILITY PATCH
RAMP
GRD BREAK
TSPB
E PMRK
PED TS
I BOX
I BOX 6"
MOW STRIP
RET WALL
GR BRK
CONC
DIRT EDGE
EPB
FLOODLIGHT
E PMRK
E RISR 1/2"
S BANNER
U PMRK
UNKNOWN GPR
N 89°54'53" E 89.58'
30.00'
59.58'
SEC CAMERA &
PA SPEAKERS (2)
E PMRK
CONC GRADE BREAK
RAMP
W PMRK
114.80'
W PMRK
W PMRK
W PMRK

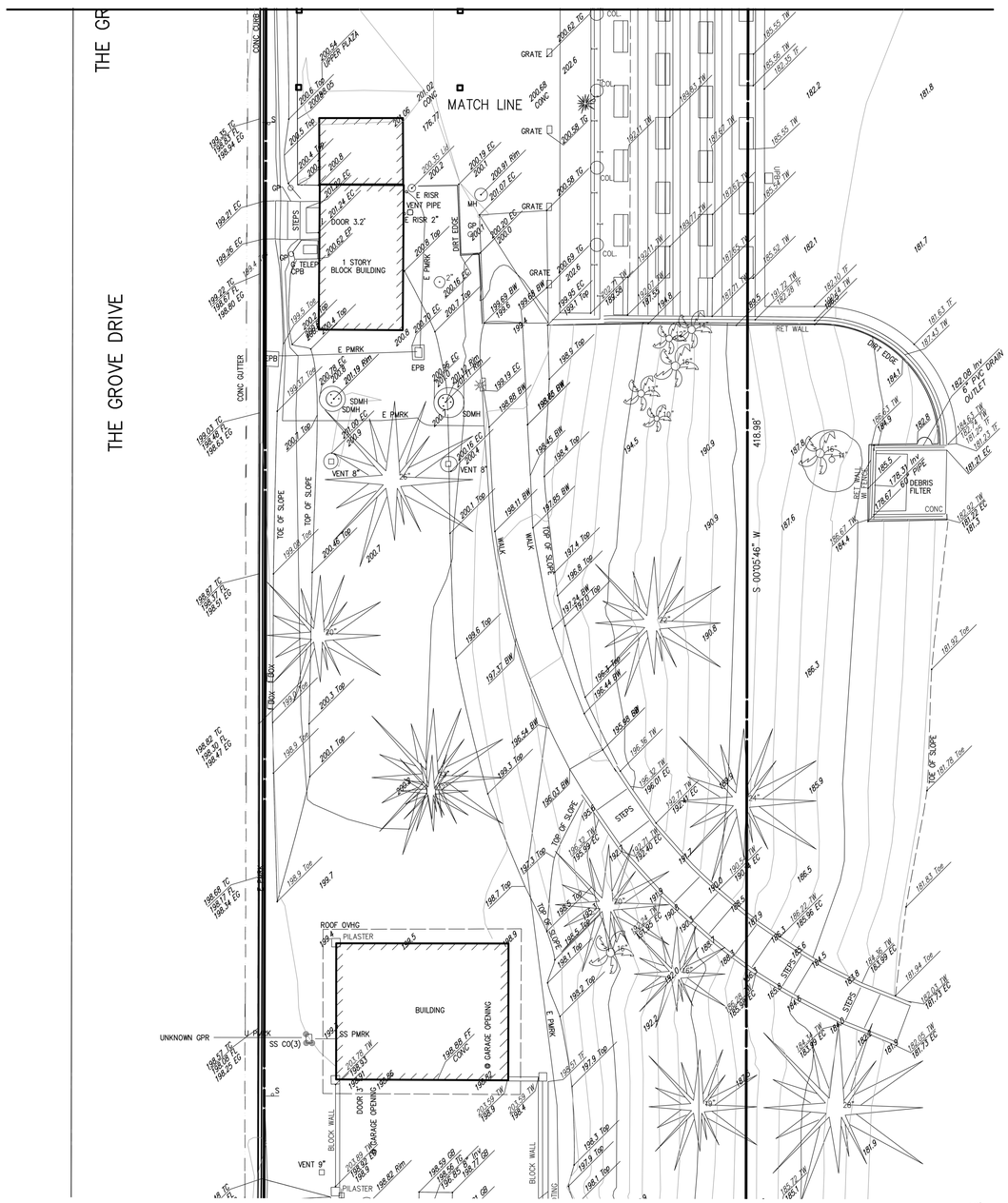

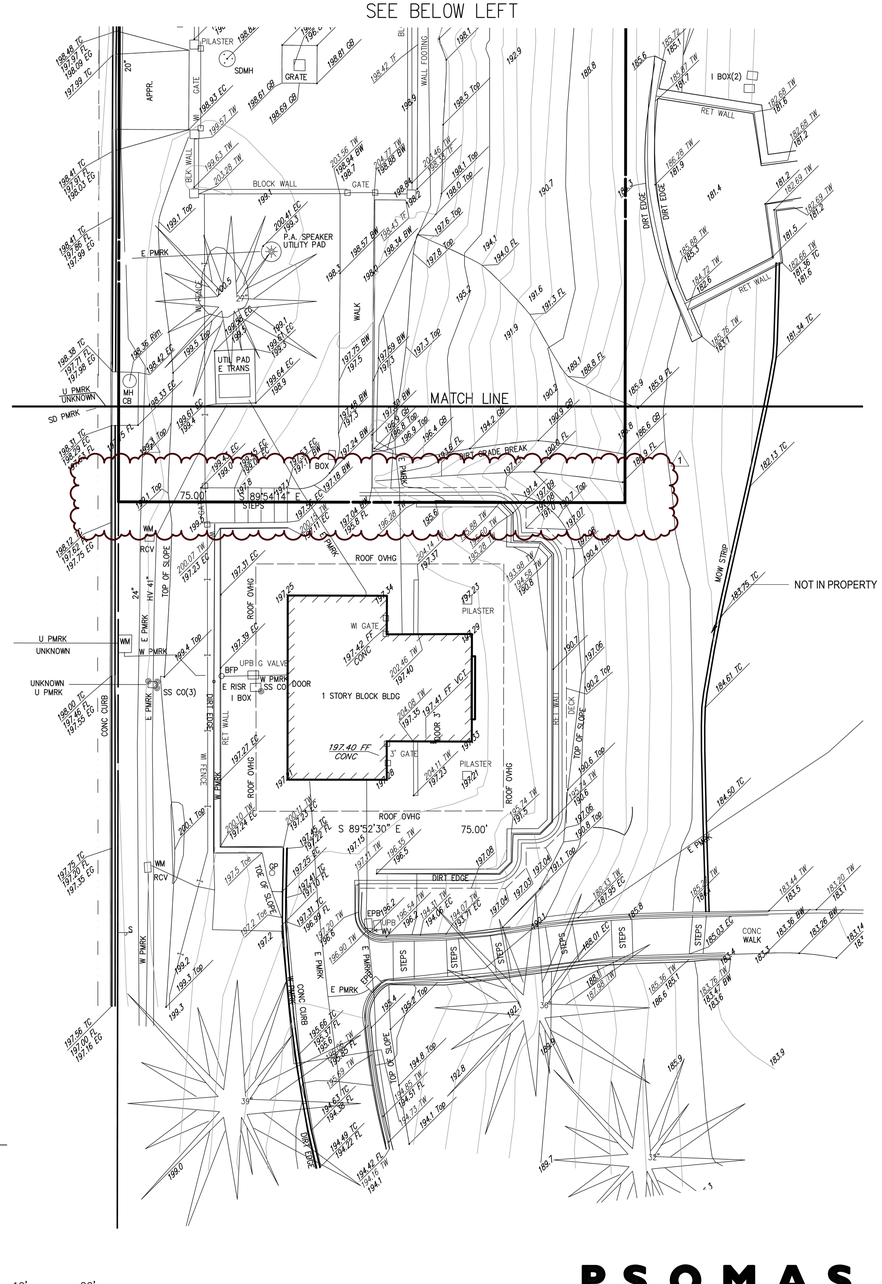

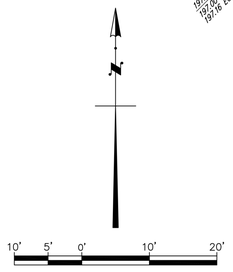

PSOMAS
555 South Flower Street, Suite 4300
Los Angeles, CA 90071
(213) 223-1400 (213) 223-1444 fax
www.psomas.com

Nov. 30, 2021 - 08:43:12 DWG Name: W:\HOL010100\SURVEY\DESIGN\PLT\TB-G061_2021-0901.dwg Updated By: dhoward

NOT FOR CONSTRUCTION

10.DEC.2021
100% DESIGN SUBMITTAL

ba
belzberg architects
2740 MAIN STREET
SANTA MONICA, CA 90405
310.453.9611
www.belzbergarchitects.com

#	DESCRIPTION	DATE
1	P.C. VERIF 1	12/10/2021

HOLOCAUST MUSEUM LA EXPANSION

100 THE GROVE DRIVE
LOS ANGELES, CA 90036

ARCHITECTURAL SURVEY

PROJECT NUMBER: 17009

G061

12/8/2021 10:32:34 AM

NOTICE TO CONTRACTORS:

1. ALL WORK PERFORMED IN THE CONTRACT SHALL CONFORM TO PROJECT SPECIFICATIONS.
2. UNLESS OTHERWISE STATED, THE CONTRACTOR SHALL PERFORM ALL THE WORK SPECIFIED ON THE DRAWINGS AND WITHIN THE VARIOUS NOTES SHOWN HEREON.
3. ALL OFF SITE WORK SHALL COMPLY WITH THE REQUIREMENTS OF THE LOCAL GOVERNING AGENCY. CONTRACTOR SHALL SECURE AND PAY FOR ALL REQUIRED CONSTRUCTION PERMITS.
6. THE EXISTING CONDITIONS SHOWN ON THE PLANS WERE OBTAINED FROM AS-BUILT DRAWINGS AND FIELD SURVEY. IT SHALL BE THE RESPONSIBILITY OF THE CONTRACTOR TO VISIT THE JOB SITE AND VERIFY THE EXACT EXISTING CONDITIONS BEFORE SUBMITTING HIS BID.
7. PRIOR TO COMMENCEMENT OF CONSTRUCTION, CONTRACTOR SHALL VERIFY ALL JOIN CONDITIONS FOR GRADING AND DRAINAGE WORK. IF CONDITIONS DIFFER FROM THOSE SHOWN ON THE PLANS, THE CONTRACTOR SHALL NOTIFY THE PROJECT ENGINEER AND SHALL NOT BEGIN CONSTRUCTION UNTIL THE CHANGED CONDITIONS HAVE BEEN EVALUATED.
8. THE EXISTENCE, LOCATION AND CHARACTERISTICS OF UNDERGROUND UTILITY INFORMATION SHOWN ON THESE PLANS HAS BEEN OBTAINED FROM DATA COLLECTED BY THE OWNER FOR EXISTING ONSITE UTILITIES AND FOR OFFSITE UTILITIES.
9. THE CONTRACTOR SHALL ASSUME SOLE AND COMPLETE RESPONSIBILITY FOR JOB SITE CONDITIONS, INCLUDING SAFETY OF ALL PERSONS AND PROPERTY, DURING THE COURSE OF CONSTRUCTION OF THIS PROJECT. THIS REQUIREMENT SHALL APPLY CONTINUOUSLY AND SHALL NOT BE LIMITED TO NORMAL WORKING HOURS, THE CONTRACTOR SHALL DEFEND, INDEMNIFY AND HOLD THE OWNER AND ENGINEER HARMLESS FROM ANY AND ALL LIABILITY REAL OR ALLEGED, IN CONNECTION WITH THE PERFORMANCE OF WORK ON THIS PROJECT.
10. THE CONTRACTOR SHALL FAMILIARIZE HIMSELF WITH THE PLANS, THE SOILS AND/OR GEOLOGY REPORTS, AND THE SITE CONDITIONS PRIOR TO COMMENCING WORK.
11. SHOULD CONFLICTING INFORMATION BE FOUND ON THE PLANS, THE CONTRACTOR SHALL NOTIFY THE PROJECT ARCHITECT OR THE ENGINEER BEFORE PROCEEDING WITH THE WORK IN QUESTION.
12. THE CONTRACTOR SHALL OBTAIN AN O.S.H.A. PERMIT FROM THE CALIFORNIA DIVISION OF INDUSTRIAL SAFETY PRIOR TO THE CONSTRUCTION OF TRENCHES OR EXCAVATIONS, WHICH ARE 5 FEET OR DEEPER.
13. ALL RECOMMENDATIONS, MADE BY THE GEOTECHNICAL/SOILS ENGINEER (AND ENGINEERING GEOLOGIST, WHERE EMPLOYED), AND CONTAINED IN THE REPORTS HEREON, AS APPROVED OR CONDITIONED BY THE CITY, SHALL BE CONSIDERED A PART OF THIS GRADING PLAN.

INSPECTIONS:

1. THE PERMITTEE OR HIS AGENT SHALL NOTIFY THE CITY ENGINEER AT LEAST TWENTY FOUR HOURS IN ADVANCE OF REQUIRED INSPECTIONS AT THE FOLLOWING STAGES OF THE WORK.
   a) INITIAL: WHEN THE SITE HAS BEEN CLEARED OF VEGETATION AND UNAPPROVED FILL, AND IT HAS BEEN SCARIFIED, BENCHED OR OTHERWISE PREPARED FOR FILL. NO FILL SHALL HAVE BEEN PLACED PRIOR TO THIS INSPECTION.
   b) ROUGH: WHEN APPROXIMATE FINAL ELEVATIONS HAVE BEEN ESTABLISHED, DRAINAGE SWALES AND TERRACES ARE GRADED AND READY FOR PAVING, BERMS ARE INSTALLED AT THE TOP OF THE SLOPES, AND THE STATEMENTS REQUIRED BY SECTION 7020 HAVE BEEN RECEIVED.
   c) FINAL: WHEN GRADING HAS BEEN COMPLETED, ALL DRAINAGE DEVICES ARE INSTALLED, SLOPE PLANTING IS ESTABLISHED, IRRIGATION SYSTEMS ARE INSTALLED, AND THE AS-BUILT PLANS, REQUIRED STATEMENTS AND REPORTS HAVE BEEN SUBMITTED.
2. IN ADDITION TO THE INSPECTION REQUIRED OF THE CITY ENGINEER FOR REGULAR GRADING, REPORTS AND STATEMENTS SHALL BE SUBMITTED TO THE CITY ENGINEER IN ACCORDANCE WITH SECTIONS 7020 AND 7021 OF THE BUILDING CODE.
3. CONTRACTOR SHALL SECURE PERMISSION FROM CITY ENGINEER FOR CONSTRUCTION, GRADING AND/OR DISCHARGE OF DRAINAGE WITHIN STREET RIGHT-OF-WAY.
4. REGISTER DEPUTY GRADING INSPECTOR IS REQUIRED ON GRADING AND FOUNDATION EARTHWORK WHERE THE SITE EXCEEDS 60,000 S.F., CUT OR FILL SLOPES EXCEED 2:1, CUT EXCEEDS 40 FT IN HEIGHT AND WITHIN 20 FT OF A PROPERTY LINE, FOUNDATION EXCAVATION BELOW A 1:1 PLANE FROM THE PROPERTY LINE, PROJECTS INVOLVE UNUSUAL HAZARDS OR FOR SHORING WORK INCLUDING SLOT CUTS.

CONTRACTOR NOTES

1. THE CONTRACTOR SHALL NOTIFY UNDERGROUND SERVICE ALERT AT LEAST 48 HOURS PRIOR TO COMMENCEMENT OF EXCAVATION TO ARRANGE FOR FIELD LOCATION OF UTILITY LINES. CALL 1-800-422-4133 FOR THIS SERVICE. ANY UTILITY NOT SUBSCRIBING TO THIS SERVICE SHALL BE CONTACTED DIRECTLY. IT SHALL BE THE CONTRACTOR'S RESPONSIBILITY TO DETERMINE WHETHER ALL UTILITIES HAVE BEEN NOTIFIED.
2. THE CONTRACTOR SHALL OBTAIN A CITY OF LOS ANGELES ENCROACHMENT PERMIT FROM THE DEPARTMENT OF TRANSPORTATION AND PUBLIC WORKS PRIOR TO PERFORMING ANY WORK IN THE CITY RIGHT-OF-WAY. ALL EXCAVATIONS, CONSTRUCTION, AND INSTALLATIONS IN THE CITY RIGHT-OF-WAY REQUIRE INSPECTION BY THE CITY PUBLIC WORKS INSPECTOR. CONTACT THE CITY AT LEAST 48 HOURS IN ADVANCE FOR INSPECTION. FAILURE TO HAVE INSPECTION WILL RESULT IN REOPENING OF THE EXCAVATION AND POSSIBLE RECONSTRUCTION.
3. PRIOR TO EXERCISING ANY RIGHT OR PERFORMING ANY OBLIGATION PURSUANT TO ANY PERMIT ISSUED BY THE CITY OF LOS ANGELES, THE CONTRACTOR SHALL OBTAIN, FILE, AND MAINTAIN WITH THE CITY OF LOS ANGELES A POLICY OF INSURANCE OR CERTIFICATE OF INSURANCE TO COVER ANY AND ALL LIABILITY THAT MAY ARISE FROM THE PERFORMANCE OF ANY WORK PERMITTED BY THE CITY IN THE RIGHT-OF-WAY.
4. ALL CONSTRUCTION ACTIVITIES WITHIN THE CITY RIGHT-OF-WAY SHALL BE DONE IN ACCORDANCE WITH THE 2012 EDITION OF THE AMERICAN PUBLIC WORKS ASSOCIATION STANDARD SPECIFICATIONS FOR PUBLIC WORKS CONSTRUCTION.
5. ALL TRAFFIC CONTROL, BARRICADING, AND CONSTRUCTION SIGNING SHALL BE IN CONFORMANCE WITH THE WORK AREA TRAFFIC CONTROL HANDBOOK (WATCH). DETOUR SIGNS SHALL BE POSTED ON WOOD OR METAL POSTS. SIGNS SHALL NOT BE POSTED ON ANY TREE OR TRAFFIC SIGN.
6. A MINIMUM OF 72 HOURS PRIOR TO THE TIME A STREET HAS RESTRICTED PARKING, THE CONTRACTOR SHALL FURNISH AND ERECT TEMPORARY "NO PARKING" SIGNS AS APPROVED BY THE CITY ENGINEER. THESE TEMPORARY SIGNS MAY BE ATTACHED TO PORTABLE BARRICADES OR BY ANY OTHER METHOD APPROVED BY THE CITY ENGINEER, AT THE OPTION OF THE CONTRACTOR. SIGNS SHALL BE SPACED A MAXIMUM OF 75 FEET APART. THESE SIGNS SHALL BE REMOVED WHEN THE STREET'S CURB LANES ARE REOPENED FOR VEHICLES TO PARK.
7. NO WATER SHALL BE TAKEN FROM FIRE HYDRANTS WITHOUT APPROVAL FROM THE JURISDICTIONAL WATER AGENCY.
8. ALL NON-STORMWATER DISCHARGES FROM THE CONSTRUCTION PHASE ACTIVITIES AT THE PROJECT SITE (I.E., MIXING AND CLEANING OF CONSTRUCTION MATERIALS, CONCRETE AND PLASTER WASHOUT, DISPOSAL OF PAINTS, ADHESIVES, SOLVENTS, AND LANDSCAPE PRODUCTS) SHALL BE PROHIBITED FROM ENTERING THE PUBLIC STORM DRAINAGE SYSTEM (INCLUDING MUNICIPAL STREETS, CATCH BASINS, CURBS, GUTTERS, DITCHES, MAN-MADE CHANNELS, OR UNDERGROUND STORM DRAINS).
9. CONTRACTOR RESPONSIBLE TO PREPARE A TEMPORARY TRAFFIC CONTROL PLAN FOR WORK IN THE PUBLIC RIGHT-OF-WAY.
10. UTILITY BEDDING AND BACKFILL SHOULD BE PLACED IN ACCORDANCE WITH GEOTECHNICAL RECOMMENDATIONS.
11. EXISTING UTILITIES OR BURIED STRUCTURES THAT ARE DEMOLISHED/REMOVED SHOULD BE REPLACED WITH PROPERLY COMPACTED FILL.

LEGAL DESCRIPTION:

THE LAND REFERRED TO HEREIN BELOW IS SITUATED IN THE CITY OF LOS ANGELES, IN THE COUNTY OF LOS ANGELES, STATE OF CALIFORNIA, AND IS DESCRIBED AS FOLLOWS:

PARCEL 1:

XXXX

PARCEL 2:

XXXX

GRADING NOTES:

1. GRADING OPERATIONS SHALL BE CONDUCTED IN ACCORDANCE WITH THE CODE OF THE CITY OF LOS ANGELES AND ALL REVISIONS THERETO.
2. A PRE-JOB MEETING WITH THE GRADING INSPECTOR IS REQUIRED PRIOR TO THE START OF GRADING OPERATIONS. SUBSEQUENT INSPECTIONS SHALL BE REQUESTED IN ACCORDANCE WITH THE INSPECTOR'S INSTRUCTIONS OF THE FIRST INSPECTION.
3. EXISTING GROUND UPON WHICH FILL OR BASE IS TO BE PLACED SHALL BE CLEARED OF WEEDS, DEBRIS, TOPSOIL, AND ALL OTHER DELETERIOUS MATERIALS; NO FILL SHALL BE PLACED UNTIL PREPARATION OF THE EXISTING GROUND HAS BEEN APPROVED BY THE SOILS ENGINEER OF RECORD AND BY THE INSPECTOR.
4. PROTECTIVE MEASURES SHALL BE TAKEN BY THE CONTRACTOR AND THE OWNER TO PROTECT ADJACENT PROPERTY, PUBLIC AND UTILITIES DURING GRADING OPERATIONS. THE CONTRACTOR ASSUMES ALL LIABILITY FOR THE UNDERGROUND UTILITY PIPES, CONDUITS, OR STRUCTURES, WHETHER SHOWN OR NOT ON THE PLAN.
5. WATER CONTENT SHALL BE CONTROLLED AS DETERMINED BY THE SOILS ENGINEER AND THE INSPECTOR.
6. PERMISSION SHALL BE SECURED FROM THE ENGINEERING DEPARTMENT IF THE TRUCKS ARE LOADED IN THE STREET.
7. UNSUITABLE MATERIAL SHALL BE DISPOSED OF OFF-SITE. THE LOCATION OF DUMPING EXCESS SOIL SHALL BE APPROVED BY THE GRADING INSPECTOR PRIOR TO STARTING EXCAVATION.
8. IF A GRADING JOB EXTENDS OVER A PERIOD OF TIME EXCEEDING SIX MONTHS, THE DEPARTMENT MAY REQUIRE PLANTING OF THOSE PORTIONS OF THE JOB WHERE ALL OTHER GRADING REQUIREMENTS HAVE BEEN MET IN ORDER TO PREVENT DUST AND EROSION.
9. LOOSE MATERIAL SHALL NOT EXCEED 3" IN DEPTH ON A FILLED SLOPE.
10. ALL LOOSE ON SITE FILL SHALL BE REMOVED AND COMPACTED.
11. ALL MAN-MADE FILL SHALL BE COMPACTED TO A MINIMUM 95 PERCENT OF THE MAXIMUM DRY DENSITY OF THE FILL MATERIAL PER THE LATEST VERSION OF ASTM D-1557.
12. AGGREGATE BASE MATERIALS BENEATH PAVEMENTS SHOULD BE COMPACTED TO A RELATIVE COMPACTION OF 95 PERCENT AS EVALUATED BY ASTM D1557.
13. SUFFICIENT TESTS OF THE FILL SOILS SHALL BE MADE TO DETERMINE THE RELATIVE COMPACTION OF THE FILL IN ACCORDANCE WITH THE FOLLOWING MINIMUM GUIDELINES:
    A. ONE TEST FOR EACH TWO FOOT VERTICAL LIFT.
    B. ONE TEST FOR EACH 500 CUBIC YARDS OF MATERIAL PLACED.
    C. ONE TEST AT THE LOCATION OF THE FINAL FILL SLOPE FOR EACH BUILDING SITE (LOT) IN EACH FOUR FOOT VERTICAL LIFT OF PORTION THEREOF.
    D. ONE TEST IN THE VICINITY OF EACH BUILDING PAD FOR EACH FOUR FOOT VERTICAL LIFT OR PORTION THEREOF.
15. IMPORT SOILS SHOULD CONSIST OF CLEAN, COMPACTABLE MATERIALS POSSESSING EXPANSION CHARACTERISTICS SIMILAR TO OR BETTER THAN THE ON-SITE SOILS. IMPORT SOILS SHOULD BE FREE OF TRASH, DEBRIS OR OTHER OBJECTIONABLE MATERIAL. CONTRACTOR SHALL NOTIFY THE PROJECT GEOTECHNICAL ENGINEER NOT LESS THAN 72 HOURS IN ADVANCE OF THE LOCATION OF ANY SOILS PROPOSED FOR IMPORT. EACH PROPOSED IMPORT SOURCE SHALL BE SAMPLED, TESTED, AND APPROVED PRIOR TO DELIVERY OF SOILS FOR USE ON THE SITE.
16. ALL FILL UNDER THE BUILDING FOUNDATION MUST BE CERTIFIED BY THE SOILS ENGINEER AS TO PROPER BEARING VALUE DESIGN AND ITS COMPLIANCE WITH THE SOILS REPORT ON NOTE 13.
17. ALL SUBGRADE UNDER AREAS TO BE PAVED SHALL BE CERTIFIED BY THE SOILS ENGINEER IN COMPLIANCE WITH THE LOS ANGELES MUNICIPAL CODE.
18. THE ENGINEERING GEOLOGIST, SOILS ENGINEER AND CIVIL ENGINEER, IN COMPLIANCE WITH THE LOS ANGELES MUNICIPAL CODE, SHALL PROVIDE THE DEPARTMENT WITH A GRADING CERTIFICATION UPON COMPLETION OF THE JOB.
19. APPROVAL OF THIS PLAN IS FOR GRADING AND PAVING ON SITE ONLY AND DOES NOT CONSTITUTE APPROVAL OF ANY BUILDING, WALL OR OTHER STRUCTURE SHOWN ON-SITE NOR ANY OFF-SITE IMPROVEMENTS SHOWN.
20. NO FILL SHALL BE PLACED DURING UNFAVORABLE WEATHER CONDITIONS. THE SOILS ENGINEER AND GRADING INSPECTOR SHALL VERIFY MOISTURE CONTENT AND DENSITY PRIOR TO PLACEMENT OF ADDITIONAL FILL AFTER HEAVY RAINS.
21. ALL CONSTRUCTION IN PUBLIC RIGHT OF WAY SHALL BE UNDER SEPARATE PERMIT AND APPROVED BY THE ENGINEERING DEPARTMENT.

NATIONAL POLLUTION DISCHARGE ELIMINATION SYSTEM (NPDES) REQUIREMENTS

22. OWNER SHALL KEEP THE CONSTRUCTION AREA SUFFICIENTLY DAMPENED TO CONTROL DUST CAUSED BY GRADING AND CONSTRUCTION. OWNER SHALL, AT ALL TIMES, PROVIDE REASONABLE CONTROL OF DUST CAUSED BY WIND.
23. THE EXPORT OR IMPORT MATERIAL IN EACH TRUCKLOAD SHALL BE KEPT LOW ENOUGH TO PREVENT SPILLAGE AND SHALL BE SUFFICIENTLY WET DOWN TO PREVENT DUST.
24. A STAGING AREA SHALL BE DESIGNATED WHERE EACH TRUCK IS PREPARED FOR ROAD TRAVEL AND ALL LOOSE MATERIAL REMOVED. ANY SUBSTANCE TO DROP FROM THE BODY, TIRES, OR WHEELS OF ANY VEHICLE UPON THE PUBLIC RIGHT OF WAY SHALL BE REMOVED IMMEDIATELY AND PERMANENTLY.
25. EROSION CONTROL MEASURES SHALL BE IN PLACE FROM OCTOBER 1 THROUGH APRIL 15.

GRADING GENERAL NOTES:

1. ALL WORK AND MATERIAL REQUIRED BY THESE PLANS SHALL BE IN ACCORDANCE WITH THE "STANDARD SPECIFICATIONS FOR PUBLIC WORKS CONSTRUCTION", LATEST EDITION, INCLUDING AMENDMENTS AND SUPPLEMENTS THERETO AS PROMULGATED BY A.P.W.A., LOS ANGELES COUNTY ORDINANCE NO. 2225, CHAPTER 70 (EXCAVATION AND GRADING) AND/OR LOCAL ORDINANCES AS APPLICABLE.
2. CONTRACTORS BIDDING THE JOB ARE EXPECTED TO PREPARE THEIR OWN ESTIMATES AND WILL IMMEDIATELY NOTIFY THE CIVIL ENGINEER AND THE CITY ENGINEER UPON DISCOVERING ANY ERRORS, OMISSIONS, OR DIFFERENCES THAT AFFECT THE COST OF THE WORK.
3. THE CONTRACTOR IS REQUIRED TO FAMILIARIZE HIMSELF WITH THE PLANS, THE SOILS AND/OR GEOLOGIC REPORTS, AND THE SITE PRIOR TO COMMENCING WORK.
4. THE EXISTENCE AND LOCATION OF ANY UNDERGROUND UTILITY PIPES, CONDUITS, OR STRUCTURES SHOWN ON THESE PLANS WERE OBTAINED FROM THE OWNER BY AN UNDERGROUND UTILITY STUDY PERFORMED BY C2 BELOW FOR ON-SITE UTILITIES. FOR OFF-SITE UTILITIES INFORMATION WAS COLLECTED BY A SEARCH OF THE AVAILABLE CITY RECORDS. THE CONTRACTOR IS REQUIRED TO INVESTIGATE THE UTILITY LINES FOR BOTH HORIZONTAL AND VERTICAL ALIGNMENT. CONTRACTOR IS REQUIRED TO TAKE DUE TO PRECAUTIONARY MEASURES TO PROTECT THE UTILITY LINES SHOWN OR NOT SHOWN ON THESE DRAWINGS. THE CONTRACTOR IS RESPONSIBLE FOR ANY DAMAGES TO UTILITY LINES OR LIABILITY FROM HITTING UTILITY LINES DURING THE COURSE OF CONSTRUCTION.
5. THE OWNERS OF POLE LINES, PIPELINES, AND OTHER SUBSTRUCTURES IN THE AREA COVERED BY THESE PLANS SHALL BE NOTIFIED BY THE CONTRACTOR AT LEAST (2) WORKING DAYS PRIOR TO COMMENCING WORK.
6. PROVISIONS WILL BE MADE FOR CONTRIBUTORY DRAINAGE AT ALL TIMES.
7. ANY MODIFICATIONS OF, OR CHANGES IN, APPROVED GRADING PLANS MUST BE APPROVED BY THE CITY ENGINEER.
8. ALL GRADED SITES MUST HAVE DRAINAGE SWALES, BERMS, AND OTHER DRAINAGE DEVICES APPROVED AT THE ROUGH GRADING STAGE. (SECTION 70230 (c) OF THE BUILDING CODE.)
9. A COPY OF GRADING PERMIT AND APPROVED GRADING PLANS MUST BE IN THE POSSESSION OF A RESPONSIBLE PERSON AND AVAILABLE AT THE SITE AT ALL TIMES.
10. THE FIELD ENGINEER MUST SET DRAINAGE STAKES FOR ALL DRAINAGE DEVICES.
11. FINAL GRADING MUST BE APPROVED BEFORE OCCUPANCY OF ANY BUILDING WILL BE ALLOWED.
12. ALL GRADING SLOPES SHALL BE PLANTED AND SPRINKLERED.
13. STANDARD 12 INCH HIGH BERM IS REQUIRED AT TOP OF ALL GRADED SLOPES.
14. NO FILL TO BE PLACED, UNTIL THE CITY GRADING INSPECTOR HAS INSPECTED AND APPROVED THE BOTTOM EXCAVATION.
15. MAN-MADE FILL SHALL BE COMPACTED TO A MINIMUM RELATIVE COMPACTION OF 90% MAX. DRY DENSITY WITHIN 40 FEET BELOW FINISH GRADE AND 93% OF MAX. DRY DENSITY DEEPER THAN 40 FEET BELOW FINISH GRADE, UNLESS A LOWER RELATIVE COMPACTION (NOT LESS THAN 90% OF MAX. DRY DENSITY) IS JUSTIFIED BY THE SOILS ENGINEER.
16. TEMPORARY EROSION CONTROL TO BE INSTALLED BETWEEN OCTOBER 1 AND APRIL 15. OBTAIN GRADING INSPECTOR'S AND DEPARTMENT OF PUBLIC WORKS APPROVAL OF PROPOSED PROCEDURES.
17. CONTINUOUS INSPECTION BY THE SOILS ENGINEER / GEOLOGIST IS REQUIRED FOR R&R AND SLOPE CONSTRUCTION.
18. PAVING SHALL BE INSTALLED IN TWO LIFTS. THE FIRST LIFT TO BE PLACED AS SOON AS POSSIBLE FOLLOWING NTP TO HELP FACILITY SITE ACCESS. THE SECOND LIFT SHALL BE PLACED TEN DAYS TO ONE WEEK PRIOR TO THE SUBSTANTIAL COMPLETION OF THE BUILDING. CUTTING OR PATCHING OF ASPHALT NOT ACCEPTABLE.

GRADING GENERAL NOTES (CONT.):

19. THE DESIGNATION OF 2% CROSSFALL ON SIDEWALKS IS AN ADA MAXIMUM. A CROSSFALL OF 1.8% IS AN ACCEPTABLE ALTERNATIVE TO ALLOW FOR CONSTRUCTION TOLERANCE.
20. RETAINING WALLS LOCATED CLOSER TO THE PROPERTY LINE THAN THE HEIGHT OF THE WALL SHALL BE BACKFILLED NOT LATER THAN 10 DAYS AFTER CONSTRUCTION OF THE WALL AND NECESSARY STRUCTURAL SUPPORTING MEMBERS UNLESS RECOMMENDED OTHERWISE BY RESPONSIBLE ENGINEER.

PRIVATE ENGINEER'S NOTICE TO SUBCONTRACTORS

1. PRIOR TO COMMENCING CONSTRUCTION, THE CONTRACTOR SHALL VERIFY ALL JOIN CONDITIONS FOR GRADING, DRAINAGE AND UNDERGROUND FACILITIES, INCLUDING LOCATION AND ELEVATION OF EXISTING UNDERGROUND FACILITIES AT CROSSINGS WITH PROPOSED UNDERGROUND FACILITIES. IF CONDITIONS DIFFER FROM THOSE SHOWN ON THE PLANS, THE CONTRACTOR SHALL NOTIFY THE ENGINEER AND SHALL NOT BEGIN CONSTRUCTION UNTIL THE CHANGED CONDITIONS HAVE BEEN EVALUATED.
2. THE EXISTENCE, LOCATION AND CHARACTERISTICS OF UNDERGROUND UTILITY INFORMATION SHOWN ON THESE PLANS HAS BEEN OBTAINED FROM A REVIEW OF AVAILABLE RECORD DATA. NO REPRESENTATION IS MADE AS TO THE ACCURACY OR COMPLETENESS OF SAID UTILITY INFORMATION. THE CONTRACTOR SHALL TAKE PRECAUTIONARY MEASURES TO PROTECT THE UTILITY LINES SHOWN AND ANY OTHER LINES NOT OF RECORD OR NOT SHOWN ON THESE PLANS.
3. THE CONTRACTOR SHALL ASSUME SOLE AND COMPLETE RESPONSIBILITY FOR THE JOB SITE CONDITIONS, INCLUDING SAFETY OF ALL PERSONS AND PROPERTY, DURING THE COURSE OF CONSTRUCTION OF THIS PROJECT. THIS REQUIREMENT SHALL APPLY CONTINUOUSLY, AND SHALL NOT BE LIMITED TO NORMAL WORKING HOURS. THE CONTRACTOR SHALL DEFEND, INDEMNIFY AND HOLD THE OWNER AND THE ENGINEER HARMLESS FROM ANY AND ALL LIABILITY, REAL OR ALLEGED, IN CONNECTION WITH PERFORMANCE OF WORK ON THIS PROJECT.
4. THE CONTRACTOR SHALL FAMILIARIZE HIMSELF WITH THE PLANS, THE SOILS AND/OR GEOLOGY REPORTS, AND THE SITE CONDITIONS PRIOR TO COMMENCING WORK.
5. SHOULD CONFLICTING INFORMATION BE FOUND ON THE PLANS, THE CONTRACTOR SHALL NOTIFY THE PROJECT ENGINEER AT PSOMAS BEFORE PROCEEDING WITH THE WORK IN QUESTION.

ESTIMATED EARTHWORK QUANTITIES:

FILL:	1,450 C.Y.
15% SHRINKING FACTOR:	220 C.Y.
***TOTAL IMPORT=**	**1,670 C.Y.**

THE ABOVE LISTED QUANTITIES REFLECT THE ENGINEER'S ESTIMATE OF THE EARTHWORK VOLUMES.

A 15% SHRINKING FACTOR IS ASSUMED.

*THE TOTAL EXPORT VOLUME INCLUDES A 10% CONTINGENCY FACTOR.

THESE QUANTITIES ARE FOR DESIGN AND BONDING PURPOSES ONLY, AND NOT FOR CONTRACT PURPOSES.

THE CONTRACTOR IS RESPONSIBLE FOR COMPUTING HIS OWN QUANTITIES.

BENCHMARKS:

BENCHMARK NO. 13-14428

DESCRIPTION: SPIKE 3' N. OF CURB BEVERLY BVD. 11' E OF BC E OF SPALDING AVE. E OF CB

ELEVATION: 202.851
DATUM: NAVD 2000 ADJ.

BASIS OF BEARINGS:

HORIZONTAL DATUM IS BASED UPON STATE PLANE COORDINATES, CALIFORNIA COORDINATE SYSTEM ZONE 5, NAD83(2011) EPOCH 2010.00. POSITIONAL VALUES SHOWN HEREON ARE BASED UPON LOCAL CONTROL POINTS AND DERIVED FROM THE GPS STATIC OBSERVATIONS UTILIZING DATA FROM SOUTHERN CALIFORNIA INTEGRATED GPS NETWORK (SCIGN) CONTINUOUSLY OPERATING REFERENCE STATIONS (CORS) LFRS, LEEP, UCLP, AND NOPK

SOILS ENGINEER/GEOLOGISTS:

GROUP DELTA CONSULTANTS, INC.
370 AMAPOLA AVENUE, SUITE 212
TORRANCE, CALIFORNIA 90501
PHONE: (310)-320-5100
CONTACT: PIROOZ KASHIGHANDI PH.D., P.E., G.E.

THIS PLAN HAS BEEN REVIEWED AND CONFORMS TO RECOMMENDATIONS OF SOILS ENGINEERING/GEOLOGIC REPORT UNDER FILE NO. LA-1470 DATED 10-9-2020.

DATE

PROJECT CONTACT INFORMATION

JOB ADDRESS:

100 THE GROVE DR.
LOS ANGELES, CA 90036

ARCHITECT:

BELZBERG ARCHITECTS
2331 MAIN STREET
SANTA MONICA, CA 90405
PHONE: (310)-453-9611
WWW.BELZBERGARCHITECTS.COM

OWNER

LOS ANGELES MUSEUM OF THE HOLOCAUST
100 THE GROVE DRIVE
LOS ANGELES, CA 90036
CONTACT: GUY LIPA

CIVIL ENGINEER:

PSOMAS
555 S. FLOWER STREET, SUITE 4300
LOS ANGELES, CA 90071
PHONE: (213) 223-1400
CONTACT: DAVID J. CURTIS, P.E.

INDEX TO SHEETS

SHT No.	DESCRIPTION
C100	TITLE SHEET
C110	EXISTING CONDITIONS / DEMO PLAN
C120	GRADING PLAN
C130	UTILITY PLAN
C140	LID PLAN
C150	HORIZONTAL CONTROL PLAN
C160	EROSION CONTROL PLAN

UNDERGROUND SERVICE ALERT
CALLTHREE WORKING DAYS
BEFORE YOU DIG:

811

Know what's **below.**
Call before you dig.

NOT FOR CONSTRUCTION

10.AUG.2021

ba
belzberg architects
2321 MAIN STREET
SANTA MONICA, CA 90405
310.453.9611
www.belzbergarchitects.com

CONSULTANT:

PSOMAS
555 S. Flower Street, Ste 4300
Los Angeles, CA 90071
t +213.223.1400
www.psomas.com

#	DESCRIPTION	DATE

HOLOCAUST MUSEUM LA EXPANSION

100 THE GROVE DRIVE
LOS ANGELES, CA 90036

TITLE SHEET

PROJECT NUMBER: 17009

C100

12/17/2020 12:48:20 AM

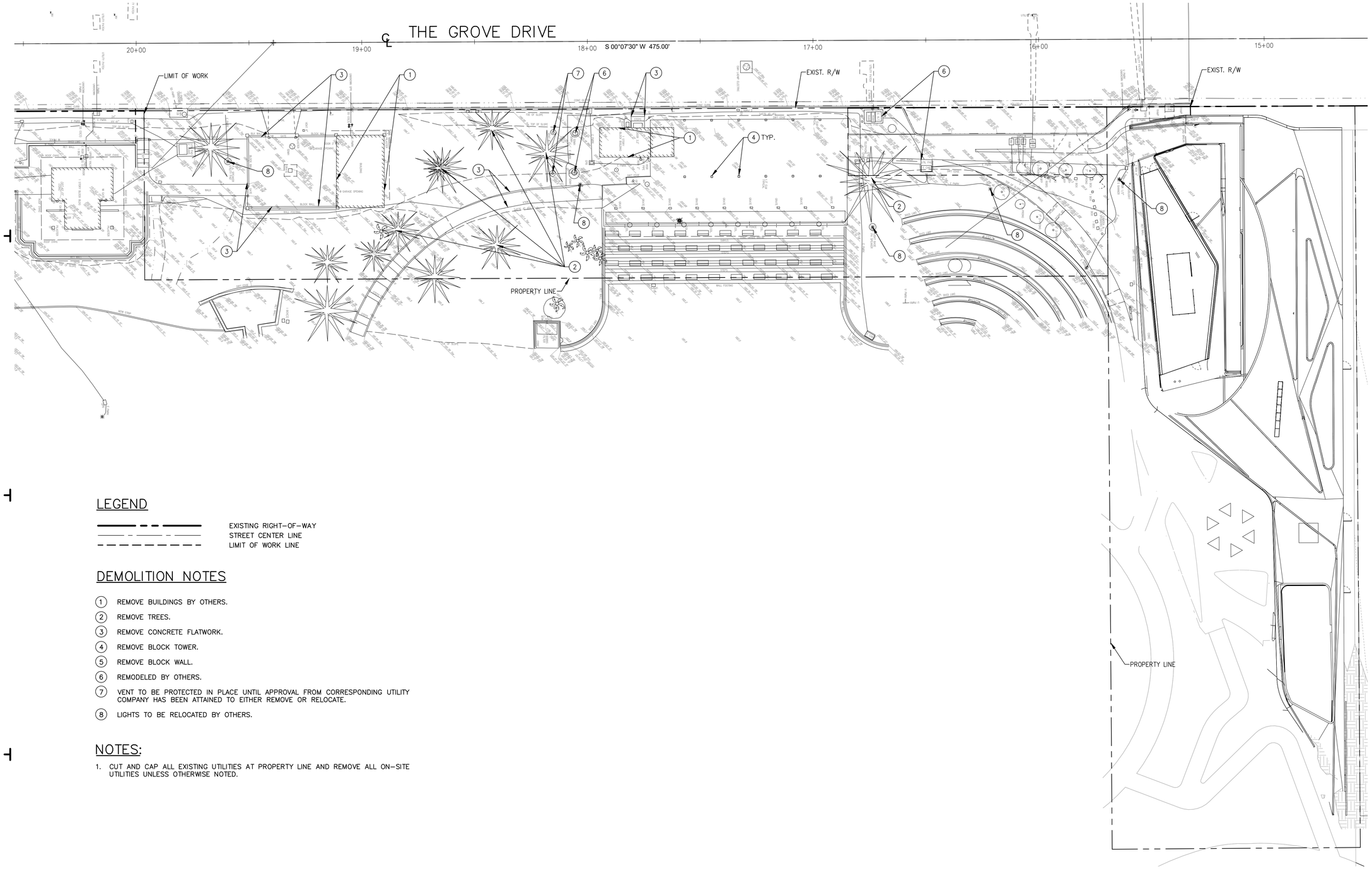

LEGEND

EXISTING RIGHT–OF–WAY
STREET CENTER LINE
LIMIT OF WORK LINE

DEMOLITION NOTES

1. REMOVE BUILDINGS BY OTHERS.
2. REMOVE TREES.
3. REMOVE CONCRETE FLATWORK.
4. REMOVE BLOCK TOWER.
5. REMOVE BLOCK WALL.
6. REMODELED BY OTHERS.
7. VENT TO BE PROTECTED IN PLACE UNTIL APPROVAL FROM CORRESPONDING UTILITY COMPANY HAS BEEN ATTAINED TO EITHER REMOVE OR RELOCATE.
8. LIGHTS TO BE RELOCATED BY OTHERS.

NOTES:

1. CUT AND CAP ALL EXISTING UTILITIES AT PROPERTY LINE AND REMOVE ALL ON–SITE UTILITIES UNLESS OTHERWISE NOTED.

20' 10' 0' 20' 40'
GRAPHIC SCALE: 1"=20"

NOT FOR CONSTRUCTION

10.AUG.2021

belzberg architects
2321 MAIN STREET
SANTA MONICA, CA 90405
310.453.9611
www.belzbergarchitects.com

CONSULTANT:

PSOMAS
555 S. Flower Street, Ste 4300
Los Angeles, CA 90071
t +213.223.1400
www.psomas.com

#	DESCRIPTION	DATE

HOLOCAUST MUSEUM LA EXPANSION

100 THE GROVE DRIVE
LOS ANGELES, CA 90036

EXISTING CONDITION/ DEMO PLAN

PROJECT NUMBER: 17009

C110

12/17/2020 12:49:20 AM

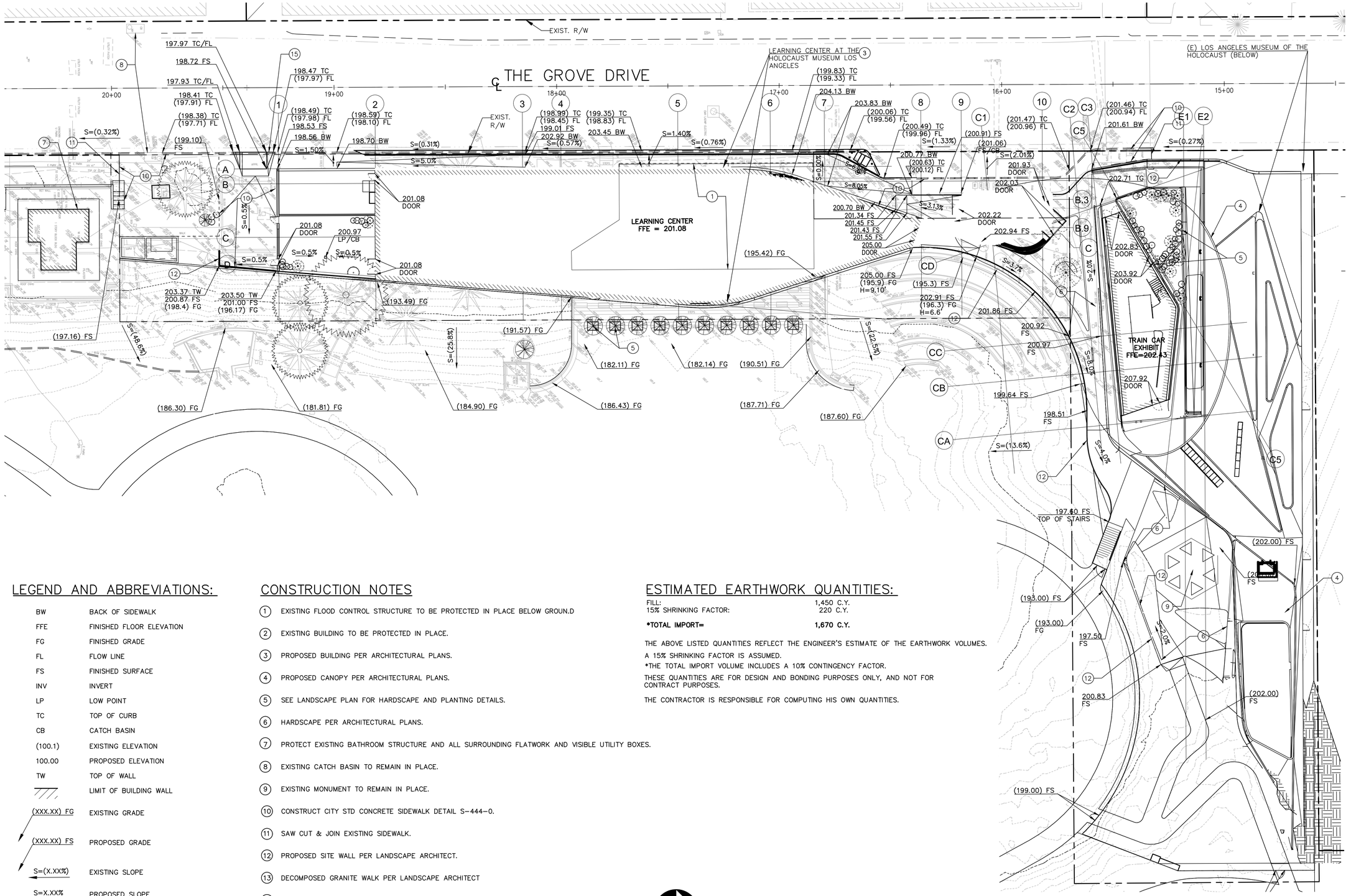

LEGEND AND ABBREVIATIONS:

BW	BACK OF SIDEWALK
FFE	FINISHED FLOOR ELEVATION
FG	FINISHED GRADE
FL	FLOW LINE
FS	FINISHED SURFACE
INV	INVERT
LP	LOW POINT
TC	TOP OF CURB
CB	CATCH BASIN
(100.1)	EXISTING ELEVATION
100.00	PROPOSED ELEVATION
TW	TOP OF WALL
	LIMIT OF BUILDING WALL
(XXX.XX) FG	EXISTING GRADE
(XXX.XX) FS	PROPOSED GRADE
S=(X.XX%)	EXISTING SLOPE
S=X.XX%	PROPOSED SLOPE

CONSTRUCTION NOTES

1. EXISTING FLOOD CONTROL STRUCTURE TO BE PROTECTED IN PLACE BELOW GROUN.D
2. EXISTING BUILDING TO BE PROTECTED IN PLACE.
3. PROPOSED BUILDING PER ARCHITECTURAL PLANS.
4. PROPOSED CANOPY PER ARCHITECTURAL PLANS.
5. SEE LANDSCAPE PLAN FOR HARDSCAPE AND PLANTING DETAILS.
6. HARDSCAPE PER ARCHITECTURAL PLANS.
7. PROTECT EXISTING BATHROOM STRUCTURE AND ALL SURROUNDING FLATWORK AND VISIBLE UTILITY BOXES.
8. EXISTING CATCH BASIN TO REMAIN IN PLACE.
9. EXISTING MONUMENT TO REMAIN IN PLACE.
10. CONSTRUCT CITY STD CONCRETE SIDEWALK DETAIL S-444-0.
11. SAW CUT & JOIN EXISTING SIDEWALK.
12. PROPOSED SITE WALL PER LANDSCAPE ARCHITECT.
13. DECOMPOSED GRANITE WALK PER LANDSCAPE ARCHITECT
14. REMOVE EXISTING CURB RAMP.
15. CONSTRUCT CASE 1 DRIVEWAY PER CITY OF LA STD. PLAN S-440-4.

ESTIMATED EARTHWORK QUANTITIES:

FILL:	1,450 C.Y.
15% SHRINKING FACTOR:	220 C.Y.
***TOTAL IMPORT=**	**1,670 C.Y.**

THE ABOVE LISTED QUANTITIES REFLECT THE ENGINEER'S ESTIMATE OF THE EARTHWORK VOLUMES.

A 15% SHRINKING FACTOR IS ASSUMED.

*THE TOTAL IMPORT VOLUME INCLUDES A 10% CONTINGENCY FACTOR.

THESE QUANTITIES ARE FOR DESIGN AND BONDING PURPOSES ONLY, AND NOT FOR CONTRACT PURPOSES.

THE CONTRACTOR IS RESPONSIBLE FOR COMPUTING HIS OWN QUANTITIES.

20 10 0 20 40
GRAPHIC SCALE: 1"=20'

NOT FOR CONSTRUCTION

10.AUG.2021

belzberg architects
2321 MAIN STREET
SANTA MONICA, CA 90405
310.453.9611
www.belzbergarchitects.com

CONSULTANT:

PSOMAS
555 S. Flower Street, Ste 4300
Los Angeles, CA 90071
t +213.223.1400
www.psomas.com

#	DESCRIPTION	DATE

HOLOCAUST MUSEUM LA EXPANSION

100 THE GROVE DRIVE
LOS ANGELES, CA 90036

GRADING PLAN

PROJECT NUMBER: 17009

C120

12/17/2020 12:48:20 AM

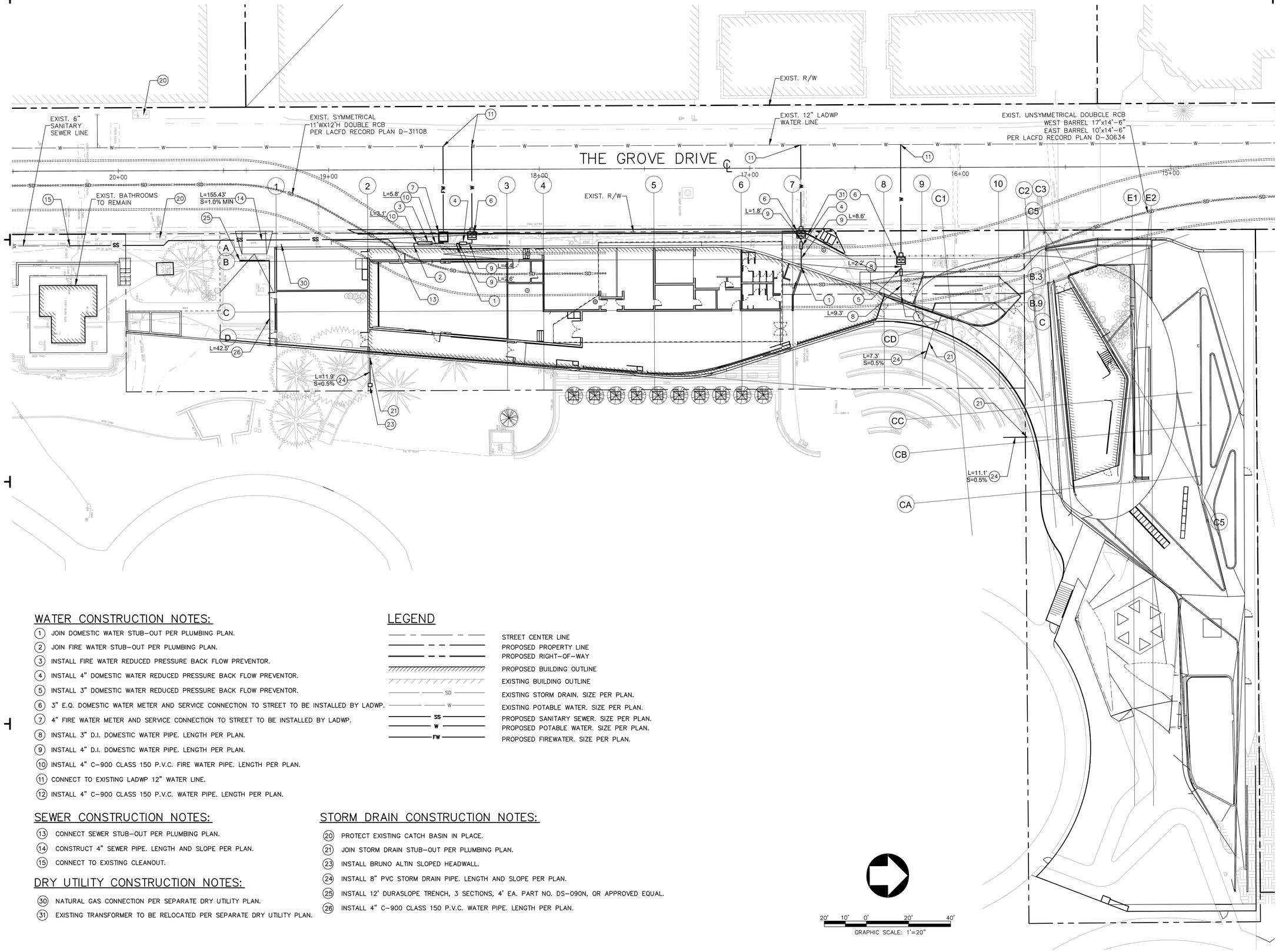

WATER CONSTRUCTION NOTES:

1. JOIN DOMESTIC WATER STUB-OUT PER PLUMBING PLAN.
2. JOIN FIRE WATER STUB-OUT PER PLUMBING PLAN.
3. INSTALL FIRE WATER REDUCED PRESSURE BACK FLOW PREVENTOR.
4. INSTALL 4" DOMESTIC WATER REDUCED PRESSURE BACK FLOW PREVENTOR.
5. INSTALL 3" DOMESTIC WATER REDUCED PRESSURE BACK FLOW PREVENTOR.
6. 3" E.Q. DOMESTIC WATER METER AND SERVICE CONNECTION TO STREET TO BE INSTALLED BY LADWP.
7. 4" FIRE WATER METER AND SERVICE CONNECTION TO STREET TO BE INSTALLED BY LADWP.
8. INSTALL 3" D.I. DOMESTIC WATER PIPE. LENGTH PER PLAN.
9. INSTALL 4" D.I. DOMESTIC WATER PIPE. LENGTH PER PLAN.
10. INSTALL 4" C-900 CLASS 150 P.V.C. FIRE WATER PIPE. LENGTH PER PLAN.
11. CONNECT TO EXISTING LADWP 12" WATER LINE.
12. INSTALL 4" C-900 CLASS 150 P.V.C. WATER PIPE. LENGTH PER PLAN.

LEGEND

- STREET CENTER LINE
- PROPOSED PROPERTY LINE
- PROPOSED RIGHT-OF-WAY
- PROPOSED BUILDING OUTLINE
- EXISTING BUILDING OUTLINE
- SD — EXISTING STORM DRAIN. SIZE PER PLAN.
- W — EXISTING POTABLE WATER. SIZE PER PLAN.
- SS — PROPOSED SANITARY SEWER. SIZE PER PLAN.
- W — PROPOSED POTABLE WATER. SIZE PER PLAN.
- FW — PROPOSED FIREWATER. SIZE PER PLAN.

SEWER CONSTRUCTION NOTES:

13. CONNECT SEWER STUB-OUT PER PLUMBING PLAN.
14. CONSTRUCT 4" SEWER PIPE. LENGTH AND SLOPE PER PLAN.
15. CONNECT TO EXISTING CLEANOUT.

DRY UTILITY CONSTRUCTION NOTES:

30. NATURAL GAS CONNECTION PER SEPARATE DRY UTILITY PLAN.
31. EXISTING TRANSFORMER TO BE RELOCATED PER SEPARATE DRY UTILITY PLAN.

STORM DRAIN CONSTRUCTION NOTES:

20. PROTECT EXISTING CATCH BASIN IN PLACE.
21. JOIN STORM DRAIN STUB-OUT PER PLUMBING PLAN.
23. INSTALL BRUNO ALTIN SLOPED HEADWALL.
24. INSTALL 8" PVC STORM DRAIN PIPE. LENGTH AND SLOPE PER PLAN.
25. INSTALL 12' DURASLOPE TRENCH, 3 SECTIONS, 4' EA. PART NO. DS-090N, OR APPROVED EQUAL.
26. INSTALL 4" C-900 CLASS 150 P.V.C. WATER PIPE. LENGTH PER PLAN.

NOT FOR CONSTRUCTION

10.AUG.2021

ba
belzberg architects
2321 MAIN STREET
SANTA MONICA, CA 90405
310.453.9611
www.belzbergarchitects.com

CONSULTANT:

PSOMAS
555 S. Flower Street, Ste 4300
Los Angeles, CA 90071
t +213.223.1400
www.psomas.com

#	DESCRIPTION	DATE

HOLOCAUST MUSEUM LA EXPANSION

100 THE GROVE DRIVE
LOS ANGELES, CA 90036

UTILITY PLAN

PROJECT NUMBER: 17009

C130

12/17/2020 12:48:20 AM

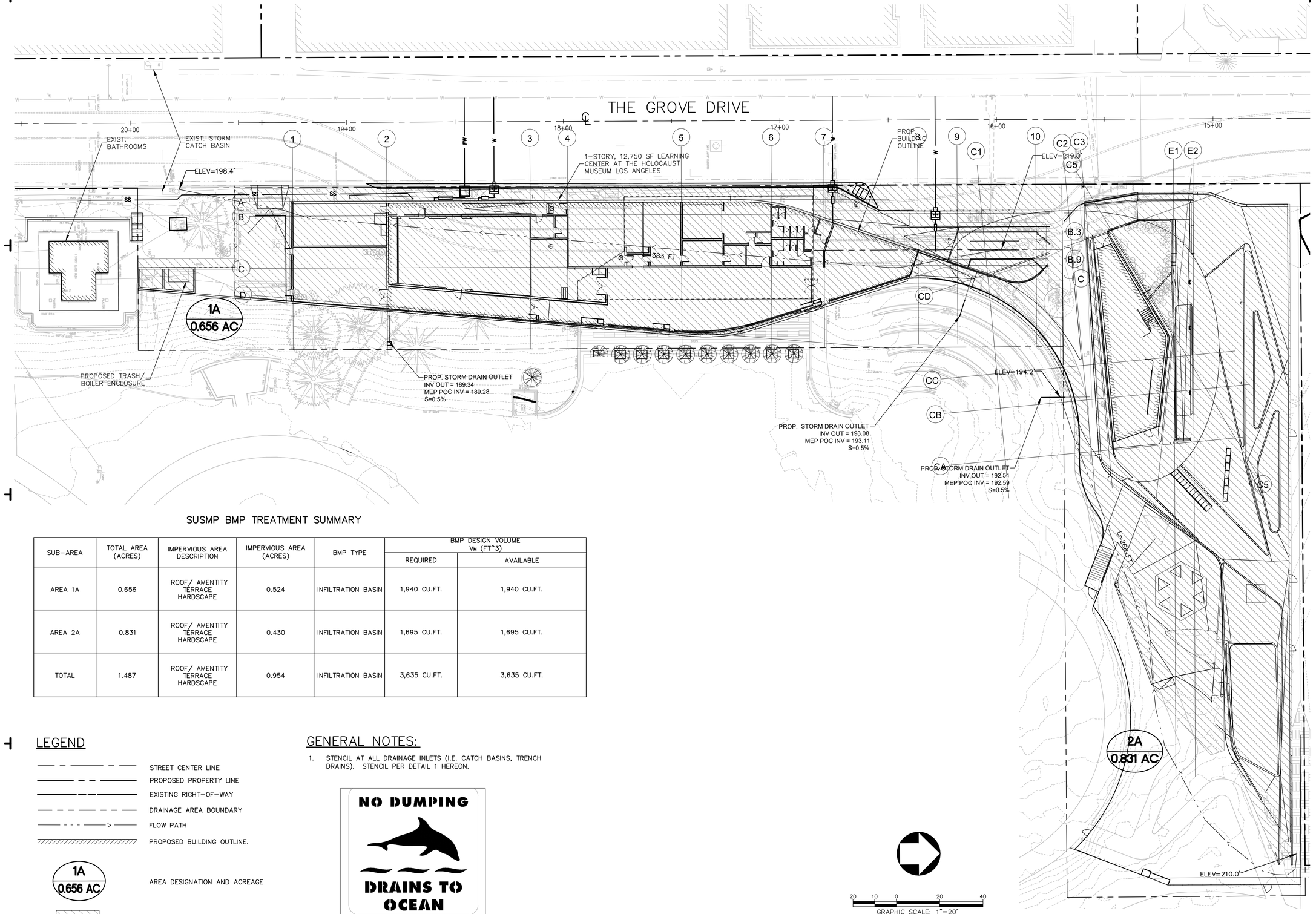

SUSMP BMP TREATMENT SUMMARY

SUB-AREA	TOTAL AREA (ACRES)	IMPERVIOUS AREA DESCRIPTION	IMPERVIOUS AREA (ACRES)	BMP TYPE	BMP DESIGN VOLUME Vm (FT^3)	
					REQUIRED	AVAILABLE
AREA 1A	0.656	ROOF/ AMENTITY TERRACE HARDSCAPE	0.524	INFILTRATION BASIN	1,940 CU.FT.	1,940 CU.FT.
AREA 2A	0.831	ROOF/ AMENTITY TERRACE HARDSCAPE	0.430	INFILTRATION BASIN	1,695 CU.FT.	1,695 CU.FT.
TOTAL	1.487	ROOF/ AMENTITY TERRACE HARDSCAPE	0.954	INFILTRATION BASIN	3,635 CU.FT.	3,635 CU.FT.

LEGEND

- STREET CENTER LINE
- PROPOSED PROPERTY LINE
- EXISTING RIGHT-OF-WAY
- DRAINAGE AREA BOUNDARY
- FLOW PATH
- PROPOSED BUILDING OUTLINE.
- 1A / 0.656 AC — AREA DESIGNATION AND ACREAGE
- HARDSCAPE AREA

GENERAL NOTES:

1. STENCIL AT ALL DRAINAGE INLETS (I.E. CATCH BASINS, TRENCH DRAINS). STENCIL PER DETAIL 1 HEREON.

DETAIL 1: DRAINAGE INLET STENCIL
NOT TO SCALE

NOT FOR CONSTRUCTION

10.AUG.2021

ba
belzberg architects
2321 MAIN STREET
SANTA MONICA, CA 90405
310.453.9611
www.belzbergarchitects.com

CONSULTANT:

PSOMAS
555 S. Flower Street, Ste 4300
Los Angeles, CA 90071
t +213.223.1400
www.psomas.com

#	DESCRIPTION	DATE

HOLOCAUST MUSEUM LA EXPANSION

100 THE GROVE DRIVE
LOS ANGELES, CA 90036

LOW IMPACT DEVELOPMENT PLAN

PROJECT NUMBER: 17009

C140

12/17/2020 12:48:20 AM

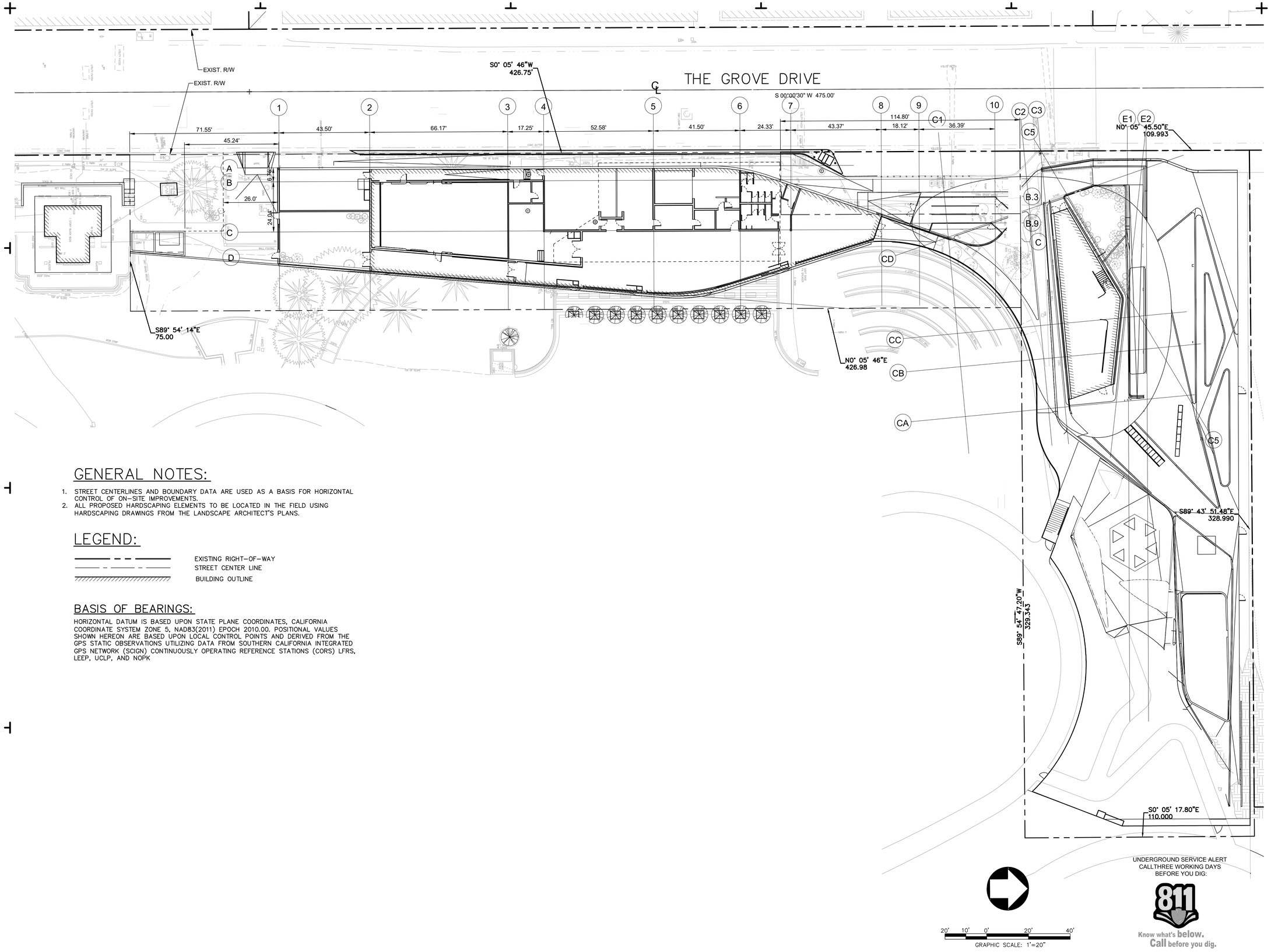

GENERAL NOTES:

1. STREET CENTERLINES AND BOUNDARY DATA ARE USED AS A BASIS FOR HORIZONTAL CONTROL OF ON-SITE IMPROVEMENTS.
2. ALL PROPOSED HARDSCAPING ELEMENTS TO BE LOCATED IN THE FIELD USING HARDSCAPING DRAWINGS FROM THE LANDSCAPE ARCHITECT'S PLANS.

LEGEND:

EXISTING RIGHT-OF-WAY
STREET CENTER LINE
BUILDING OUTLINE

BASIS OF BEARINGS:

HORIZONTAL DATUM IS BASED UPON STATE PLANE COORDINATES, CALIFORNIA COORDINATE SYSTEM ZONE 5, NAD83(2011) EPOCH 2010.00. POSITIONAL VALUES SHOWN HEREON ARE BASED UPON LOCAL CONTROL POINTS AND DERIVED FROM THE GPS STATIC OBSERVATIONS UTILIZING DATA FROM SOUTHERN CALIFORNIA INTEGRATED GPS NETWORK (SCIGN) CONTINUOUSLY OPERATING REFERENCE STATIONS (CORS) LFRS, LEEP, UCLP, AND NOPK

UNDERGROUND SERVICE ALERT
CALLTHREE WORKING DAYS
BEFORE YOU DIG:
811
Know what's below.
Call before you dig.

NOT FOR CONSTRUCTION

10.AUG.2021

belzberg architects
2321 MAIN STREET
SANTA MONICA, CA 90405
310.453.9611
www.belzbergarchitects.com

CONSULTANT:

PSOMAS
555 S. Flower Street, Ste 4300
Los Angeles, CA 90071
t +213.223.1400
www.psomas.com

#	DESCRIPTION	DATE

HOLOCAUST MUSEUM LA EXPANSION

100 THE GROVE DRIVE
LOS ANGELES, CA 90036

HORIZONTAL CONTROL PLAN

PROJECT NUMBER: 17009

C150

12/17/2020 12:49:20 AM

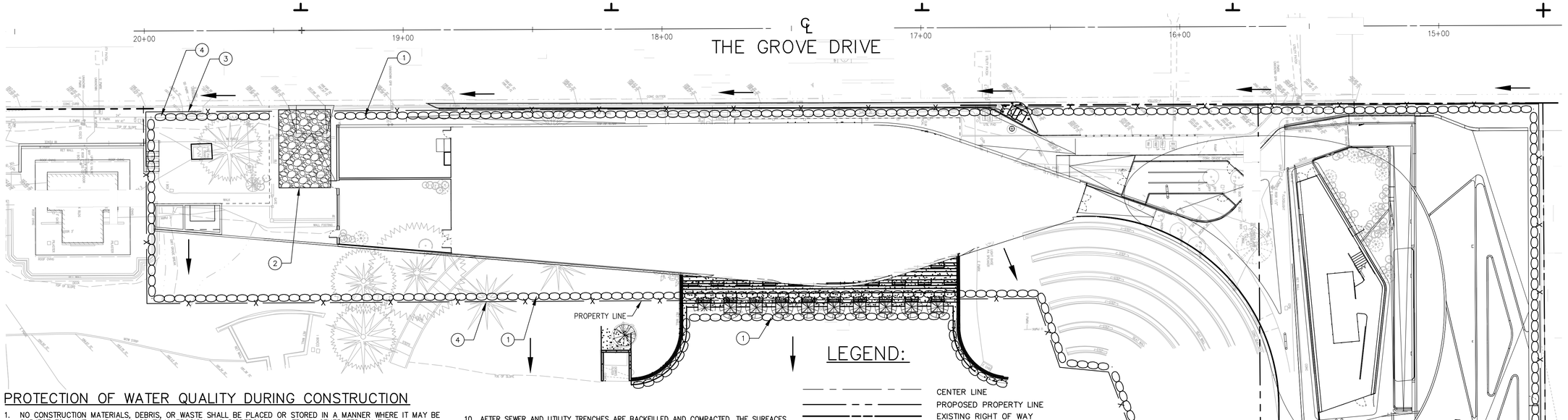

PROTECTION OF WATER QUALITY DURING CONSTRUCTION

1. NO CONSTRUCTION MATERIALS, DEBRIS, OR WASTE SHALL BE PLACED OR STORED IN A MANNER WHERE IT MAY BE SUBJECT TO WAVE, WIND, RAIN, OR TIDAL EROSION AND DISPERSION. ALL TRASH GENERATED ON THE CONSTRUCTION SITE SHALL BE PROPERLY DISPOSED OF AT THE END OF EACH CONSTRUCTION DAY.
2. ANY AND ALL DEBRIS AND EXCESS SOIL OR SAND RESULTING FROM EXCAVATION AND CONSTRUCTION ACTIVITIES SHALL BE REMOVED FROM THE PROJECT SITE WITHIN 72 HOURS OF COMPLETION OF EXCAVATION OR CONSTRUCTION. EXCAVATION AND CONSTRUCTION DEBRIS AND SEDIMENT SHALL BE REMOVED OR CONTAINED AND SECURED FROM WORK AREAS EACH DAY THAT EXCAVATION AND CONSTRUCTION OCCURS TO PREVENT THE ACCUMULATION OF SEDIMENT AND OTHER DEBRIS THAT COULD BE DISCHARGED INTO COASTAL WATERS. ALL EXCAVATION AND CONSTRUCTION DEBRIS AND OTHER WASTE MATERIALS REMOVED FROM THE PROJECT SITE SHALL BE DISPOSED OF OR RECYCLED IN COMPLIANCE WITH ALL LOCAL, STATE AND FEDERAL REGULATIONS. NO DEBRIS SHALL BE PLACED IN COASTAL WATERS. IF A DISPOSAL SITE IS LOCATED IN THE COASTAL ZONE, A COASTAL DEVELOPMENT PERMIT OR AN AMENDMENT TO THIS PERMIT SHALL BE REQUIRED BEFORE DISPOSAL CAN TAKE PLACE.
3. EROSION CONTROL/SEDIMENTATION BEST MANAGEMENT PRACTICES (BMPs) SHALL BE USED TO CONTROL DUST AND SEDIMENTATION IMPACTS TO COASTAL WATERS DURING CONSTRUCTION AND DEMOLITION ACTIVITIES. BMPs SHALL INCLUDE, BUT ARE NOT LIMITED TO; PLACEMENT OF SAND BAGS AROUND DRAINAGE INLETS TO PREVENT RUNOFF/SEDIMENT TRANSPORT INTO THE STORM DRAIN SYSTEM AND THE PACIFIC OCEAN.
4. ALL CONSTRUCTION MATERIALS, EXCLUDING LUMBER SHALL BE COVERED AND ENCLOSED ON ALL SIDES, AND KEPT AS FAR AWAY FROM STORM DRAIN INLETS AND RECEIVING WATERS POSSIBLE.
5. DURING EXCAVATION AND CONSTRUCTION OF THE PROPOSED PROJECT, NO RUNOFF, SITE DRAINAGE OR WATERING SHALL BE DIRECTED FROM THE SITE INTO ANY STREET OR DRAIN THAT DISCHARGES INTO THE BEACH OR OCEAN, UNLESS SUCH DISCHARGE SPECIFICALLY AUTHORIZED BY THE CALIFORNIA REGIONAL WATER QUALITY CONTROL BOARD.
6. IN THE EVENT THAT LEAD-CONTAMINATED SOILS OR OTHER TOXINS OR CONTAMINATED MATERIAL ARE DISCOVERED ON THE SITE, SUCH MATTER SHALL BE STOCKPILED AND TRANSPORTED OFF-SITE ONLY IN ACCORDANCE WITH DEPARTMENT OF TOXIC SUBSTANCES CONTROL (DTSC) RULES AND /OR REGIONAL WATER QUALITY CONTROL BOARD (RWQCB) REGULATIONS.

THE APPLICANT SHALL:

7. DEVELOP AND IMPLEMENT SPILL PREVENTION AND CONTROL MEASURES AND SHALL ENSURE THE PROPER HANDLING, STORAGE, AND APPLICATION OF PETROLEUM PRODUCTS AND OTHER CONSTRUCTION MATERIALS. THESE SHALL INCLUDE A DESIGNATED FUELING AND VEHICLE MAINTENANCE AREA WITH APPROPRIATE BERMS AND PROTECTION TO PREVENT ANY SPILLAGE OF GASOLINE OR RELATED PETROLEUM PRODUCTS OR CONTACT WITH RUNOFF. IT SHALL BE LOCATED AS FAR AWAY FROM THE RECEIVING WATERS AND STORM DRAIN INLETS AS POSSIBLE.
8. MAINTAIN AND WASH EQUIPMENT AND MACHINERY IN CONFINED AREAS SPECIFICALLY DESIGNED TO CONTROL RUNOFF. THINNERS OR SOLVENTS SHALL NOT BE DISCHARGED INTO SANITARY OR STORM SEWER SYSTEMS. WASHOUT FROM CONCRETE TRUCKS SHALL BE DISPOSED OF AT A CONTROLLED LOCATION NOT SUBJECT TO RUNOFF INTO COASTAL WATERS, AND MORE THAN FIFTY FEET AWAY FROM A STORM DRAIN, OPEN DITCH OR SURFACE WATERS.
9. PROVIDE AN MAINTAIN ADEQUATE DISPOSAL FACILITIES FOR SOLID WASTE, INCLUDING EXCESS CONCRETE, PRODUCED DURING CONSTRUCTION.
10. PROVIDE AND MAINTAIN TEMPORARY SEDIMENT BASINS (INCLUDING DEBRIS BASINS, DESILTING BASINS OR SILT TRAPS), TEMPORARY DRAINS AND SWALES, SAND BAG BARRIERS, WIND BARRIERS SUCH AS SOLID BOARD FENCE, SNOW FENCES, OR HAY BALES AND SILT FENCING.
11. STABILIZE ANY STOCKPILED FILL WITH GEOFABRIC COVERS OR OTHER APPROPRIATE COVER, AND CLOSE AND STABILIZE OPEN TRENCHES AS SOON AS POSSIBLE.
12. IMPLEMENT THE APPROVED CONSTRUCTION BEST MANAGEMENT PRACTICES PLAN ON THE PROJECT SITES PRIOR TO AND CONCURRENT WITH THE EXCAVATION AND CONSTRUCTION OPERATIONS. THE BMPs SHALL BE MAINTAINED THROUGHOUT THE DEVELOPMENT PROCESS.

TYPICAL EROSION CONTROL NOTES:
STORM WATER POLLUTION EROSION CONTROL PLAN NOTES:

1. IN CASE OF EMERGENCY, CALL AT
2. TEMPORARY EROSION CONTROL DEVICES SHOWN ON THE GRADING PLAN WHICH INTERFERE WITH THE WORK SHALL BE RELOCATED OR MODIFIED AS AND WHEN THE INSPECTOR SO DIRECTS AS THE WORK PROGRESSES.
3. ALL LOOSE SOIL AND DEBRIS SHALL BE REMOVED FROM THE STREET AREAS UPON STARTING OPERATIONS AND PERIODICALLY THEREAFTER AS DIRECTED BY THE INSPECTOR.
4. WHEN THE INSPECTOR SO DIRECTS, A 12-INCH BERM SHALL BE MAINTAINED ALONG
5. A.) VELOCITY CHECK DAMS SHALL BE PROVIDED ACROSS THE OUTLETS OF ALL LOTS DRAINING INTO THE STREET.
6. STAND-BY CREWS SHALL BE ALERTED BY THE PERMITTEE OR CONTRACTOR FOR EMERGENCY WORK DURING RAINSTORMS.
7. ALL UTILITY TRENCHES SHALL BE BLOCKED AT THE PRESCRIBED INTERVALS FROM BOTTOM TO TOP WITH A DOUBLE ROW OF SANDBAGS PRIOR TO BACKFILL. SEWER TRENCHES SHALL BE BLOCKED AT THE PRESCRIBED INTERVALS WITH A DOUBLE ROW OF SANDBAGS EXTENDING DOWNWARD, TWO SANDBAGS FROM THE GRADED SURFACE OF THE STREET. SANDBAGS ARE TO BE PLACED WITH ALTERNATE HEADER AND STRETCHER COURSES. THE INTERVALS PRESCRIBED BETWEEN SANDBAG BLOCKING SHALL DEPEND ON THE SLOPE OF THE GROUND SURFACE, BUT SHALL NOT EXCEED THE FOLLOWING:

GRADE OF THE STREET	INTERVAL
LESS THAN 2%	AS REQUIRED
2% TO 4%	100 FEET
4% TO 10%	50 FEET
OVER 10%	25 FEET

8. VELOCITY CHECK DAMS SHALL BE PROVIDED IN ALL UNPAVED STREET AREAS AT THE INTERVALS INDICATED ABOVE. VELOCITY CHECK DAMS MAY BE CONSTRUCTED OF SANDBAGS, TIMBER, OR OTHER EROSION-RESISTANT MATERIALS APPROVED BY THE INSPECTOR, AND SHALL EXTEND COMPLETELY ACROSS THE STREET OR CHANNEL AT RIGHT ANGLES TO THE CENTERLINE. EARTH DIKES MAY NOT BE USED AS VELOCITY CHECK DAMS.
9. VELOCITY CHECK DAMS SHALL BE PROVIDED IN ALL UNPAVED GRADED CHANNELS AT THE INTERVALS INDICATED BELOW.

GRADE OF CHANNEL	INTERVALS BETWEEN CHECK DAMS
LESS THAN 3%	100 FEET
3% TO 6%	50 FEET
OVER 6%	25 FEET

10. AFTER SEWER AND UTILITY TRENCHES ARE BACKFILLED AND COMPACTED, THE SURFACES OVER SUCH TRENCHES SHALL BE MOUNDED SLIGHTLY TO PREVENT CHANNELING OF WATER IN THE TRENCH AREA. CARE SHOULD BE EXERCISED TO PROVIDE FOR CROSS FLOW AT
11. EXCEPT WHEN THE INSPECTOR DIRECTS OTHERWISE, ALL DEVICES SHOWN SHALL BE IN PLACE AT THE END OF EACH WORKING DAY WHEN RAIN IS FORECAST, AND SHALL BE MAINTAINED DURING THE RAINY SEASON (OCTOBER 15 TO APRIL 15).
12. ALL BASINS AND CHECK DAMS SHALL HAVE THE DEBRIS AND SILT REMOVED AFTER EACH STORM TO RESTORE THEIR CAPACITY.
13. SANDBAGS SHALL BE STOCKPILED IN PARKWAY, READY TO BE PLACED IN POSITION WHEN RAIN IS FORECAST, OR WHEN THE INSPECTOR SO DIRECTS.
14. BRUSH AND GROUND COVER MAY NOT BE REMOVED MORE THAN 10 FEET ABOVE FILLS BETWEEN OCTOBER 15 AND APRIL 15.
15. PROVIDE A PLASTIC COVER OVER THE SLOPE. PLACE SANDBAGS ON TOP OF PLASTIC TO PREVENT THE PLASTIC COVER FROM MOVING AS DIRECTED BY THE INSPECTOR.
16. THE CONTRACTOR SHALL IMPLEMENT ADDITIONAL EROSION CONTROL MEASURES AS REQUIRED BY THE GRADING INSPECTOR.

STORM WATER POLLUTION CONTROL REQUIREMENT FOR GRADING PROJECTS, SITE CONSTRUCTION AND EROSION CONTROL PLANS:

BEST MANAGEMENT PRACTICES FOR CONSTRUCTION ACTIVITIES*

A. THE FOLLOWING IS INTENDED AS AN ATTACHMENT FOR CONSTRUCTION AND GRADING PLANS AND REPRESENTS THE MINIMUM STANDARDS OF GOOD HOUSEKEEPING WHICH MUST BE IMPLEMENTED TO ALL CONSTRUCTION SITES REGARDLESS OF SIZE.

ERODED SEDIMENTS AND OTHER POLLUTANTS MUST BE RETAINED ON SITE AND MAY NOT BE TRANSPORTED FROM THE SITE VIA SHEETFLOW, SWALES, AREA DRAINS, NATURAL DRAINAGE COURSES OR WIND.

STOCKPILES OF EARTH AND OTHER CONSTRUCTION RELATED MATERIALS MUST BE PROTECTED FROM BEING TRANSPORTED FROM THE SITE BY THE FORCES OF WIND OR WATER.

FUELS, OILS, SOLVENTS AND OTHER TOXIC MATERIALS MUST BE STORED IN ACCORDANCE WITH THEIR LISTING AND ARE NOT TO CONTAMINATE THE SOIL AND SURFACE WATERS. ALL APPROVED STORAGE CONTAINERS ARE TO BE PROTECTED FROM THE WEATHER. SPILLS MUST BE CLEANED UP IMMEDIATELY AND DISPOSED OF IN A PROPER MANNER. SPILLS MAY NOT BE WASHED INTO THE DRAINAGE SYSTEM.

EXCESS OR WASTE CONCRETE MAY NOT BE WASHED INTO THE PUBLIC WAY OR ANY OTHER DRAINAGE SYSTEM. PROVISIONS SHALL BE MADE TO RETAIN CONCRETE WASTES ON SITE UNTIL THEY CAN BE DISPOSED OF AS SOLID WASTE.

TRASH AND CONSTRUCTION RELATED SOLID WASTES MUST BE DEPOSITED INTO A COVERED RECEPTACLE TO PREVENT CONTAMINATION OF RAINWATER AND DISPERSAL BY WIND.

SEDIMENTS AND OTHER MATERIALS MAY NOT BE TRACKED FROM THE SITE BY VEHICLE TRAFFIC. THE CONSTRUCTION ENTRANCE ROADWAYS MUST BE STABILIZED SO AS TO INHIBIT SEDIMENTS FROM BEING DEPOSITED INTO THE PUBLIC WAY. ACCIDENTAL DEPOSITIONS MUST BE SWEPT UP IMMEDIATELY AND MAY NOT BE WASHED DOWN BY RAIN OR OTHER MEANS.

ANY SLOPES WITH DISTURBED SOILS OR DENUDED OF VEGETATION MUST BE STABILIZED SO AS TO INHIBIT EROSION BY WIND AND WATER.

* THE ABOVE BEST MANAGEMENT PRACTICES ARE DETAILED IN THE CALIFORNIA STORM WATER BEST MANAGEMENT PRACTICES, CONSTRUCTION HANDBOOK. JULY 2012

B. THE FOLLOWING BMPS AS OUTLINED IN, BUT NOT LIMITED TO, THE CALIFORNIA STORMWATER QUALITY ASSOCIATION BEST MANAGEMENT PRACTICE CONSTRUCTION HANDBOOK, THE LATEST REVISED EDITION, MAY APPLY DURING CONSTRUCTION (ADDITIONAL MEASURES MAY BE REQUIRED IF DEEMED APPROPRIATE BY COUNTY):

C. SECTION 2 OF THE CSQA BMP CONSTRUCTION HANDBOOK, JAN 2003 IS PART OF THESE EROSION CONTROL PLANS, INCLUDING BUT NOT LIMITED TO:
- -MINIMUM REQUIREMENTS,
- -GOOD HOUSEKEEPING PRACTICES,
- -STAFF TRAINING,
- -SITE INSPECTIONS,
- -BMP MONITORING AND MAINTENANCE,
- -STORMWATER POLLUTION CONTROL DOCUMENTATION.

NS-3 – PAVING AND GRINDING OPERATIONS
NS-8 – VEHICLE AND EQUIPMENT CLEANING
NS-9 – VEHICLE AND EQUIPMENT FUELING
NS-10 – VEHICLE AND EQUIPMENT MAINTENANCE
NS-11 – DRIVING OPERATIONS
NS-12 – CONCRETE CURING
NS-13 – CONCRETE FINISHING
WM-1 – MATERIAL DELIVERY AND STORAGE
WM-2 – MATERIAL USE
WM-3 – STOCKPILE MANAGEMENT
WM-4 – SPILL PREVENTION AND CONTROL
WM-5 – SOLID WASTE MANAGEMENT
WM-8 – CONCRETE WASTE MANAGEMENT
WM-9 – SANITARY/SEPTIC WASTE MANAGEMENT

EC-1 – SCHEDULING
SE-3 – SEDIMENT TRAP
SE-6 – GRAVEL BAG BERM
SE-7 – STREET SWEEPING AND VACUUMING
SE-10 – STORM DRAIN INLET PROTECTION
TC-1 – STABILIZED CONSTRUCTION ENTRANCE/EXIT
TC-2 – STABILIZED CONSTRUCTION ROADWAY AS REQUIRED
TC-3 – ENTRANCE/ OUTLET TIRE WASH
WE-1 – WIND EROSION CONTROL

LEGEND:

- CENTER LINE
- PROPOSED PROPERTY LINE
- EXISTING RIGHT OF WAY
- FLOW DIRECTION
- SAND BAGS
- SILT FENCE

EROSION CONTROL CONSTRUCTION NOTES:

1. INSTALL GRAVEL BAG BERM PER SE-6. ALSO SEE DETAIL 1 HEREON.
2. PROJECT SITE STABILIZED CONSTRUCTION ENTRANCE/EXIT PER TC-1. ALSO SEE DETAIL 3 HEREON.
3. INSTALL STORM DRAIN INLET PROTECTION PER BMP SE-10.
4. INSTALL SILT FENCE PER SE-1. ALSO SEE DETAIL 2 HEREON.
5. IMPLEMENT STAGING AREA PER NS-8 VEHICLE AND EQUIPMENT CLEANING, NS-9 VEHICLE AND EQUIPMENT FUELING, NS-10 VEHICLE AND EQUIPMENT MAINTENANCE, WM-1 MATERIAL DELIVERY AND STORAGE. PRIOR TO MATERIAL DELIVERY AND VEHICLE STORAGE. CONTRACTOR TO ADJUST LOCATION OF AREAS ON-SITE AS NEEDED.

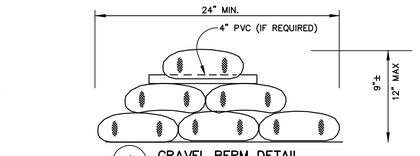

1 GRAVEL BERM DETAIL
NOT TO SCALE

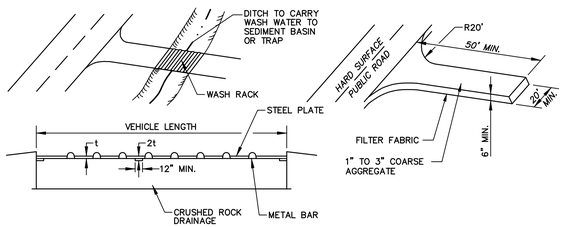

WASH RACK (SCHEMATIC)

2 STABILIZED CONSTRUCTION ENTRANCE AND WASH RACK
(BEST MANAGEMENT PRACTICES ESC24)
NOT TO SCALE

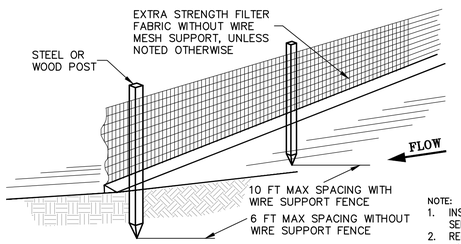

3 SILT FENCE DETAIL
NOT TO SCALE

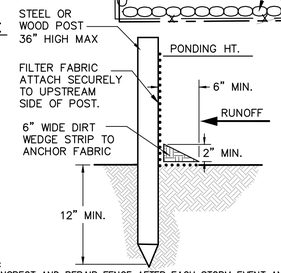

NOTE:
1. INSPECT AND REPAIR FENCE AFTER EACH STORM EVENT AND REMOVE SEDIMENT WHEN NECESSARY.
2. REMOVED SEDIMENT SHALL BE DEPOSITED TO AN AREA THAT WILL NOT CONTRIBUTE SEDIMENT OFF-SITE AND CAN BE PERMANENTLY STABILIZED.
3. SILT FENCE SHALL BE PLACED ON SLOPE CONTOURS TO MAXIMIZE PONDING EFFICIENCY.

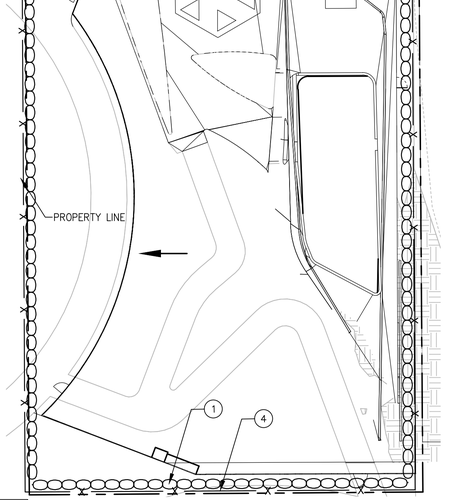

20' 10' 0' 20' 40'
GRAPHIC SCALE: 1"=20"

UNDERGROUND SERVICE ALERT
CALLTHREE WORKING DAYS
BEFORE YOU DIG:
811
Know what's below.
Call before you dig.

NOT FOR CONSTRUCTION

10.AUG.2021

ba
belzberg architects
2321 MAIN STREET
SANTA MONICA, CA 90405
310.453.9611
www.belzbergarchitects.com
CONSULTANT:
PSOMAS
555 S. Flower Street, Ste 4300
Los Angeles, CA 90071
t +213.223.1400
www.psomas.com

#	DESCRIPTION	DATE

HOLOCAUST MUSEUM LA EXPANSION

100 THE GROVE DRIVE
LOS ANGELES, CA 90036

EROSION CONTROL PLAN

PROJECT NUMBER: 17009

C160

12/17/2020 12:49:20 AM

HOLOCAUST MUSEUM LA EXPANSION

100% LANDSCAPE DESIGN DEVELOPMENT

100 THE GROVE DRIVE
LOS ANGELES, CA 90036

OWNER/CLIENT
LOS ANGELES MUSEUM OF THE HOLOCAUST
100 THE GROVE DRIVE
LOS ANGELES, CA 90036

PHONE: 323.651.3704
CONTACT: LISA BARNETT,
DIRECTOR OF OPERATIONS

ARCHITECT
BELZBERG ARCHITECTS
2321 MAIN STREET
SANTA MONICA, CA 90405

PHONE: 310.453.9611
CONTACT: DAVID CHEUNG

LANDSCAPE ARCHITECT
STUDIO-MLA
251 S. MISSION RD.
LOS ANGELES, CA. 90033

PHONE: 213.384.3844
CONTACT: ERIC MARECKI
MATT LYSNE

CIVIL ENGINEER
PSOMAS
555 FLOWER ST #4300
LOS ANGELES, CA 90071

PHONE: 213.223.1436
CONTACT: DAVID CURTIS
ALISHA FLORES

STRUCTURAL ENGINEER
ARUP
900 WILSHIRE BLVD 19TH FLOOR
LOS ANGELES, CA. 90017

PHONE: 310.578.4549
CONTACT: FRANK FREUDENBERGER,
PROJECT MANAGER

LIGHTING DESIGNER
ARUP
900 WILSHIRE BLVD 19TH FLOOR
LOS ANGELES, CA. 90017

PHONE: 310.578.4549
CONTACT: DAN FOREMAN

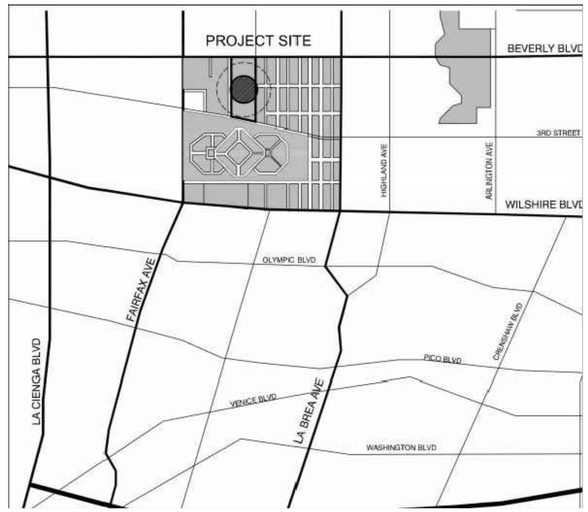

VICINITY MAP
N.T.S

NOT FOR CONSTRUCTION

18.DEC.2020

belzberg architects
2321 MAIN STREET
SANTA MONICA, CA 90405
310.453.9611

www.belzbergarchitects.com

STUDIO-MLA
251 South Mission Road
Los Angeles, California 90033
T. 213 384 3844 studio-mla.com

#	DESCRIPTION	DATE
	25% DD PROGRESS	1/29/21

HOLOCAUST
MUSEUM LA
EXPANSION

100 THE GROVE DRIVE
LOS ANGELES, CA 90036

COVER SHEET

PROJECT NUMBER: 17009

L000

12/17/2020 12:48:20 AM

ABBREVIATIONS

&	AND
@	AT
#	NUMBER
%	PERCENT
A.C.	ASPHALTIC CONCRETE
AD	AREA DRAIN
ADJ.	ADJACENT
AM	APICAL MERISTEM
ARCH.	ARCHITECTURE
ASTM	AMERICAN SOCIETY OF TESTING & MATERIALS
BC	BOTTOM OF CURB
BCR	BEGIN CURB RADIUS
BLDG.	BUILDING
BS	BOTTOM OF STEP
BTH	BROWN TRUNK HEIGHT
BW	BOTTOM OF WALL
C.I.P.	CAST IN PLACE
C.J.	CONSTRUCTION JOINT
CL	CENTER LINE
CLR	CLEAR
CMB	CRUSHED MISCELLANEOUS BASE
CMU	CONCRETE MASONRY UNIT
CONC.	CONCRETE
CONT.	CONTINUOUS
CORP.	CORPORATION
d	PENNY (NAIL SIZE)
D.G.	DECOMPOSED GRANITE
D.I.	DRAIN INLET
D,DIA.	DIAMETER
DWGS.	DRAWINGS
(E)	EXISTING
EA.	EACH
E.J.	EXPANSION JOINT
EX.	EXISTING
ETC.	ETCETERA
E.W.	EACH WAY
F.D.C.	FIRE DEPARTMENT CONNECTIONS
FFE	FINISH FLOOR ELEVATION
FF	FINISH FLOOR
FG	FINISH GRADE
FIN.	FINISH
FS	FINISH SURFACE
FTG.	FOOTING
GALV.	GALVANIZED
H.B.	HEADEBOARD
H,HT.	HEIGHT
HOR.	HORIZONTAL, HORIZONTALLY
HP	HIGH POINT
L	LENGTH
LB.	POUND
L.F.	LINEAR FEET
L.O.W.	LIMIT OF WORK
LP	LOW POINT
MAX.	MAXIMUM
M.E.P.	MECHANICAL, ELECTRICAL, PLUMBING
MIN.	MINIMUM
(N)	NEW
NAT.	NATURAL
N.I.C.	NOT IN CONTRACT
N.T.S.	NOT TO SCALE
O.C.	ON CENTER
O.D.	OUTSIDE DIAMETER
OF/CI	OWNER FURNISHED/CONTRACTOR INSTALLED
P.A., PA	PLANTING AREA
P.O.B.	POINT OF BEGINNING
PP	POWER POLE
PL	PROPERTY LINE
PT	PRESSURE TREATED
PVC	POLY VINYL CHLORIDE
R.	RISER
R, RAD.	RADIUS
R.C.B.	ROOT CONTROL BARRIER
REINF.	REINFORCED
REP.	REPRESENTATIVE
R.O.W.	RIGHT-OF-WAY
S.C.	SAWCUT JOINT
SCH.	SCHEDULE
SF	SQUARE FEET
SIM.	SIMILAR
S.J.	SCORE JOINT
S.L.	SCORELINE
SQ.	SQUARE
SS	STAINLESS STEEL
STD.	STANDARD
T.	TREAD
T.B.D.	TO BE DETERMINED
TC	TOP OF CURB
TF	TOP OF FOOTING
TG	TOP OF GRATE
TW	TOP OF WALL
TYP.	TYPICAL
VERT.	VERTICAL, VERTICALLY
V.I.F.	VERIFY IN FIELD
W	WIDTH
W/	WITH
WL	WATER LEVEL
W.W.M.	WELDED WIRE MESH

SYMBOLS

PROPERTY LINE

RIGHT-OF-WAY

LIMIT OF WORK LINE

MATCHLINE
REFER TO LXXX

MATCHLINE

CENTER LINE

SECTION

ELEVATION

DETAIL

ALIGN

POINT OF BEGINNING/
ORIGIN POINT OF LAYOUT

DETAIL SECTION

A-101

KEYNOTE

CALLOUT

GENERAL NOTES

1. INSTALL ALL IMPROVEMENTS IN ACCORDANCE WITH CITY OF LOS ANGELES REQUIREMENTS. IN CASE OF DISCREPANCY BETWEEN THESE PLANS AND THE CITY OF LOS ANGELES REQUIREMENTS, THE MOST STRINGENT REQUIREMENTS WILL APPLY.

2. A VISIT TO THE SITE IS REQUIRED. VERIFY ALL CONDITIONS PRIOR TO SUBMITTING A PROPOSAL OF COST FOR CONSTRUCTION.

3. THESE DRAWINGS, AS AN INSTRUMENT OF SERVICE, ARE THE PROPERTY OF THE LANDSCAPE ARCHITECT AND MAY NOT BE REPRODUCED WITHOUT THE LANDSCAPE ARCHITECT'S PERMISSION AND UNLESS THE REPRODUCTION CARRIES THE LANDSCAPE ARCHITECT'S NAME. ALL DESIGN AND OTHER INFORMATION SHOWN ON THE DRAWINGS IS FOR USE ON THE SPECIFIED PROJECT ONLY AND SHALL NOT BE USED OTHERWISE WITHOUT WRITTEN PERMISSION FROM THE LANDSCAPE ARCHITECT.

4. REVIEW THESE PLANS AND NOTES COMPLETELY. ANY DISCREPANCIES SHALL BE BROUGHT TO THE ATTENTION OF THE LANDSCAPE ARCHITECT IMMEDIATELY UPON DISCOVERY.

5. EXTRA WORK TO BE APPROVED IN WRITING BY THE OWNER PRIOR TO COMMENCEMENT OF WORK.

6. IT IS THE RESPONSIBILITY OF THE SUB-CONTRACTORS TO FAMILIARIZE THEMSELVES WITH ALL GRADE DIFFERENCES, LOCATION OF WALLS, UTILITIES, SEWERS, WATER LINES, ETC. COORDINATE WORK WITH OTHER SUB-CONTRACTORS FOR THE LOCATION AND INSTALLATION OF PIPE SLEEVES UNDER PAVING, ELECTRICAL CONNECTIONS, WATER HOOK-UPS, ETC.

7. ALL REQUIREMENTS OF THE UNIFORM BUILDING CODE SHALL APPLY TO THE WORK SPECIFIED HEREIN UNLESS OTHERWISE MODIFIED BY THESE DOCUMENTS.

8. CONTRACTOR SHALL OBTAIN ALL PERMITS REQUIRED TO COMPLETE THE WORK SPECIFIED PRIOR TO COMMENCEMENT OF WORK.

9. BEFORE COMMENCING ANY WORK, OBTAIN AN UNDERGROUND SERVICE I.D. BY CALLING DIG- ALERT AT 1-800-422-4133 TWO (2) WORKING DAYS PRIOR TO ANY EXCAVATION.

10. CONTRACTOR TO COORDINATE A PRE-CONSTRUCTION MEETING ON SITE TWO (2) WORKING DAYS PRIOR TO START OF CONSTRUCTION. NOTIFY OWNER, LANDSCAPE ARCHITECT, AND ALL SUB-CONTRACTORS.

11. SUBMIT REQUESTS FOR MEETINGS, OBSERVATIONS, AND APPROVALS BY THE LANDSCAPE ARCHITECT TWO (2) WORKING DAYS PRIOR TO THE DATE AND TIME PROPOSED.

12. SHOP DRAWINGS MUST BE SUBMITTED TO THE LANDSCAPE ARCHITECT FOR REVIEW AND APPROVAL PRIOR TO PROCEEDING WITH FABRICATION.

13. OBTAIN CITY OF LOS ANGELES INSPECTOR'S AND LANDSCAPE ARCHITECT'S REVIEW AND APPROVAL OF WORK IN PROGRESS AT VARIOUS TIMES DURING CONSTRUCTION. THE FOLLOWING REVIEWS/MEETINGS ARE MANDATORY. PROVIDE TWO (2) WORKING DAYS NOTICE FOR EACH REQUESTED VISIT.
    - *PRE-JOB CONFERENCE
    - *CONSTRUCTION STAKING
    - *MAIN LINE PRESSURE TEST AND TRENCH DEPTHS PRIOR TO BACKFILL OF TRENCHES
    - *COVERAGE TEST UPON COMPLETION OF SPRINKLER INSTALLATION
    - *FINAL GRADING REVIEW
    - *PLANT MATERIAL LOCATION REVIEW
    - *PLANT MATERIAL APPEARANCE AND QUALITY REVIEW
    - *SOIL PREPARATION AND PLANTING INSTALLATION METHODS
    - *FINAL WALK THROUGH (AT COMPLETION OF PLANTING INSTALLATION)
    - *FINAL WALK THROUGH (AT COMPLETION OF MAINTENANCE PERIOD)

14. IF NOT NOTED IN THESE PLANS, CONTRACTOR TO INSTALL ALL PRODUCTS PER MANUFACTURER'S INSTALLATION/RECOMMENDATIONS.

DIRECT ANY QUESTIONS REGARDING THESE PLANS TO :
STUDIO-MLA
251 S. MISSION RD.
LOS ANGELES, CA 90033
213-384-3844

ATTN: MATT LYSNE
ERIC MARECKI

SHEET INDEX

LEGEND

SHEET NOT ISSUED	
ISSUED FOR INFORMATION AND COORDINATION	●
SHEET DELETED	⌀
SHEET SCOPE COMPLETED PREVIOUSLY	□

		100% DESIGN DOCUMENTS
L000	COVER SHEET	●
L001	GENERAL NOTES & SHEET INDEX	●
L002	CONTEXT PLAN	●
L003	OVERALL REFERENCE PLAN	●
L004	PROJECT KEY PLAN	●
L101	TREE DISPOSITION PLAN	●
L102	TREE DISPOSITION PLAN	●
L200	CONSTRUCTION NOTES & SCHEDULE	●
L201	CONSTRUCTION PLAN	●
L202	CONSTRUCTION PLAN	●
L203	CONSTRUCTION PLAN	●
L204	CONSTRUCTION PLAN	●
L300	LAYOUT NOTES & SCHEDULE	
L301	LAYOUT PLAN	
L302	LAYOUT PLAN	
L303	LAYOUT PLAN	
L034	LAYOUT PLAN	
L401	ENLARGEMENT PLAN	●
L501	ELEVATIONS & SECTIONS	●
L502	ELEVATIONS & SECTIONS	●
L503	ELEVATIONS & SECTIONS	●
L504	ELEVATIONS & SECTIONS	●
L601	CONSTRUCTION DETAILS - PAVING & EDGING	●
L602	CONSTRUCTION DETAILS - PAVING & EDGING	
L610	CONSTRUCTION DETAILS - WALLS	●
L611	CONSTRUCTION DETAILS - WALLS	●
L620	CONSTRUCTION DETAILS - FENCES, GATES, & RAILINGS	●
L621	CONSTRUCTION DETAILS - FENCES, GATES, & RAILINGS	●
L630	CONSTRUCTION DETAILS - AMENITIES	●
L631	CONSTRUCTION DETAILS - AMENITIES	
L640	CONSTRUCTION DETAILS - SITE FURNITURE	
L700A	IRRIGATION NOTES & SCHEDULE	
L700B	OVERALL IRRIGATION PLAN	
L701	IRRIGATION PLAN	
L702	IRRIGATION PLAN	
L703	IRRIGATION PLAN	
L704	IRRIGATION PLAN	
L705	IRRIGATION DETAILS	
L800A	PLANTING NOTES & SCHEDULE	●
L800B	OVERALL PLANTING PLAN	●
L801	PLANTING PLAN	●
L802	PLANTING PLAN	●
L803	PLANTING PLAN	●
L804	PLANTING PLAN	●
L805	PLANTING DETAILS	

DIAL BEFORE YOU DIG
1-800-422-4133
DIGALERT
PLAY IT SAFE. DIAL BEFORE YOU DIG!
AT LEAST TWO WORKING DAYS PRIOR TO EXCAVATING
SERVING NINE SOUTHERN CALIFORNIA COUNTIES

NOT FOR CONSTRUCTION

18.DEC.2020

ba
belzberg architects
2321 MAIN STREET
SANTA MONICA, CA 90405
310.453.9611
www.belzbergarchitects.com

STUDIO-MLA
251 South Mission Road
Los Angeles, California 90033
T. 213 384 3844 studio-mla.com

#	DESCRIPTION	DATE
25% DD PROGRESS		1/29/21

HOLOCAUST
MUSEUM LA
EXPANSION

100 THE GROVE DRIVE
LOS ANGELES, CA 90036

GENERAL NOTES
& SHEET INDEX

PROJECT NUMBER: 17009

L001

12/17/2020 12:48:20 AM

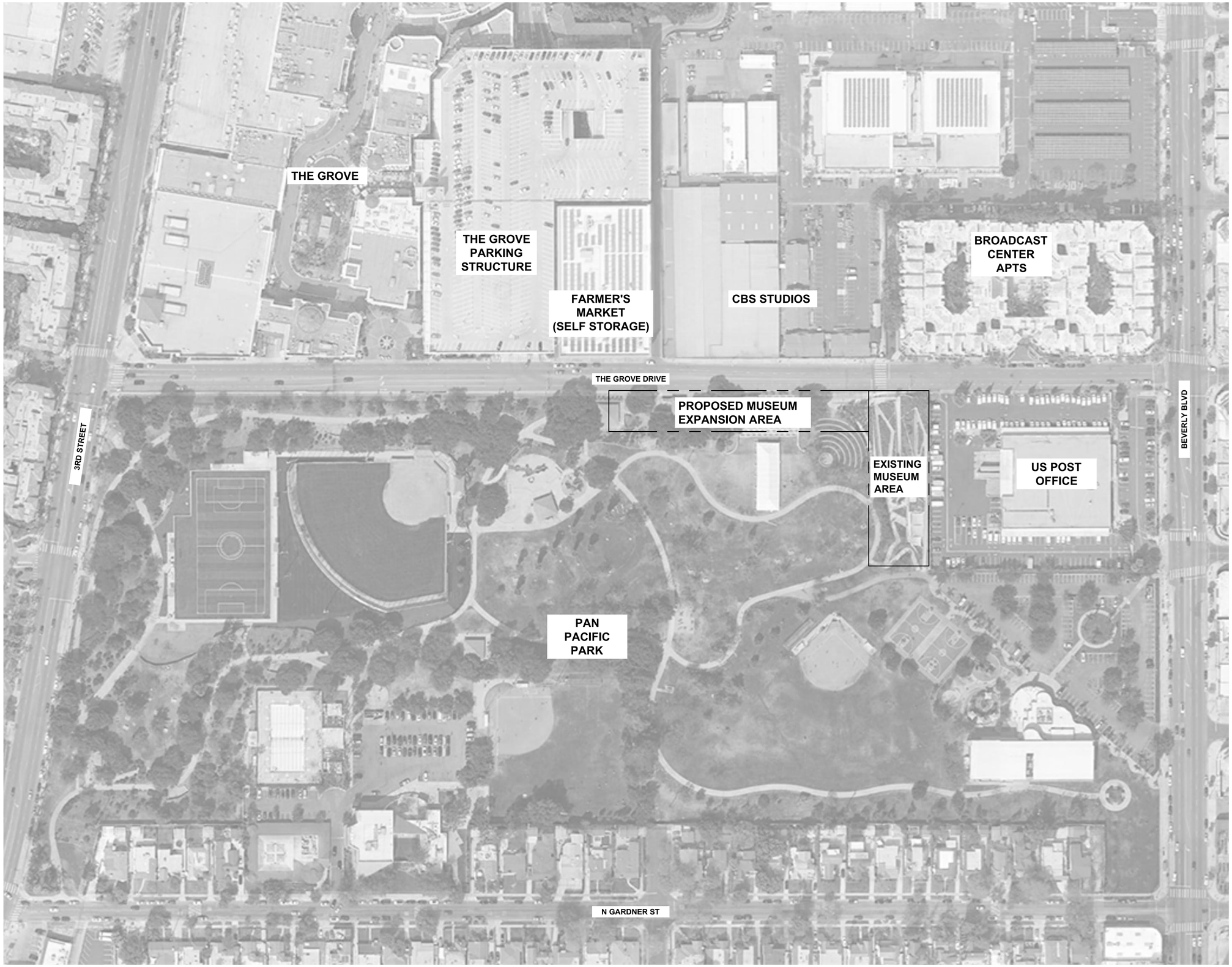

NOT FOR CONSTRUCTION

18.DEC.2020

ba
belzberg architects
2321 MAIN STREET
SANTA MONICA, CA 90405
310.453.9611
www.belzbergarchitects.com

STUDIO-MLA
251 South Mission Road
Los Angeles, California 90033
T. 213 384 3844 studio-mla.com

#	DESCRIPTION	DATE
25%	DD PROGRESS	1/29/21

HOLOCAUST MUSEUM LA EXPANSION

100 THE GROVE DRIVE
LOS ANGELES, CA 90036

VICINITY SITE PLAN

PROJECT NUMBER: 17009

L002

12/17/2020 12:49:20 AM

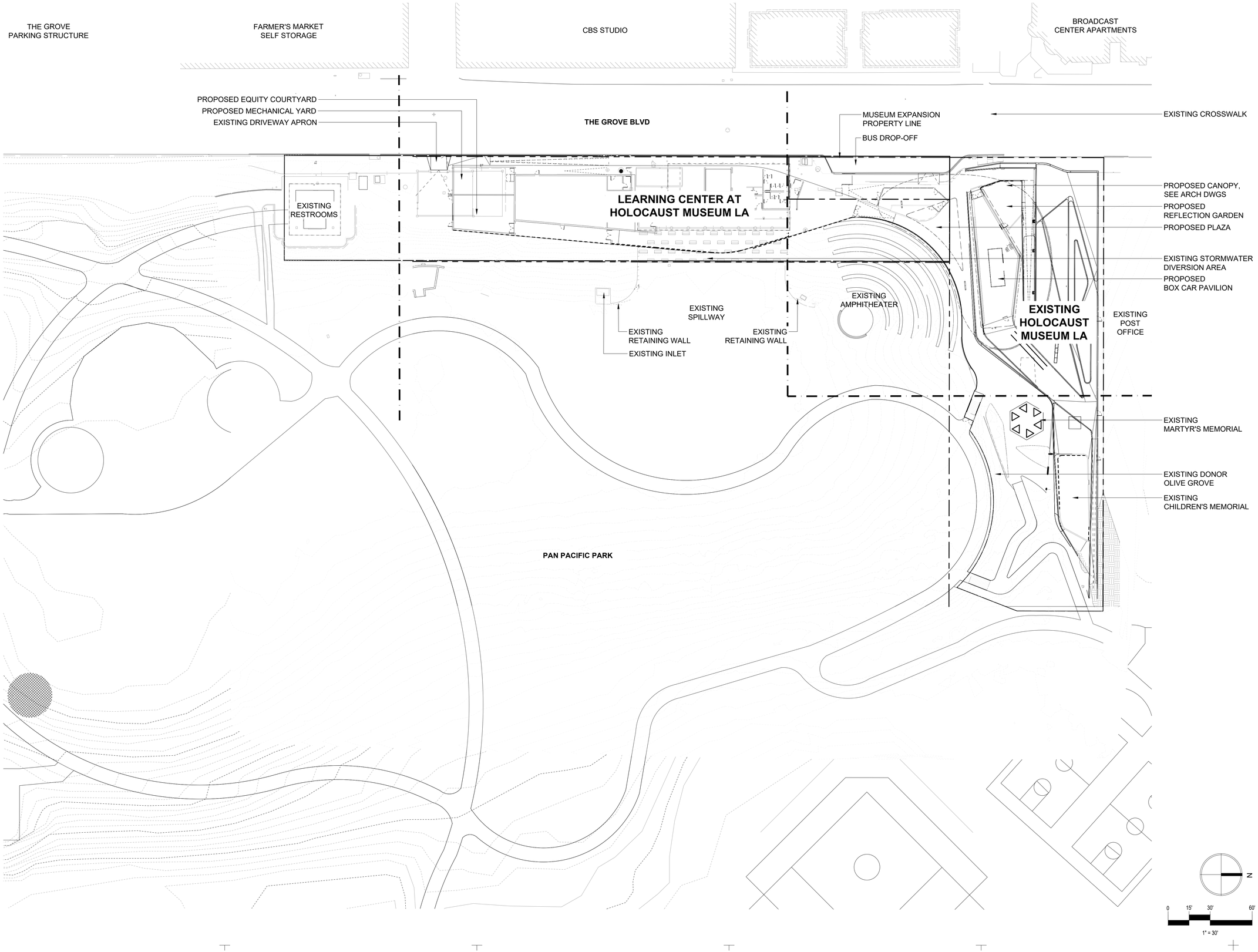

NOT FOR CONSTRUCTION

18.DEC.2020

ba
belzberg architects
2321 MAIN STREET
SANTA MONICA, CA 90405
310.453.9611
www.belzbergarchitects.com

STUDIO-MLA
251 South Mission Road
Los Angeles, California 90033
T. 213 384 3844 studio-mla.com

#	DESCRIPTION	DATE
25%	DD PROGRESS	1/29/21

HOLOCAUST
MUSEUM LA
EXPANSION

100 THE GROVE DRIVE
LOS ANGELES, CA 90036

OVERALL
SITE PLAN

PROJECT NUMBER: 17009

L003

12/17/2020 12:49:20 AM

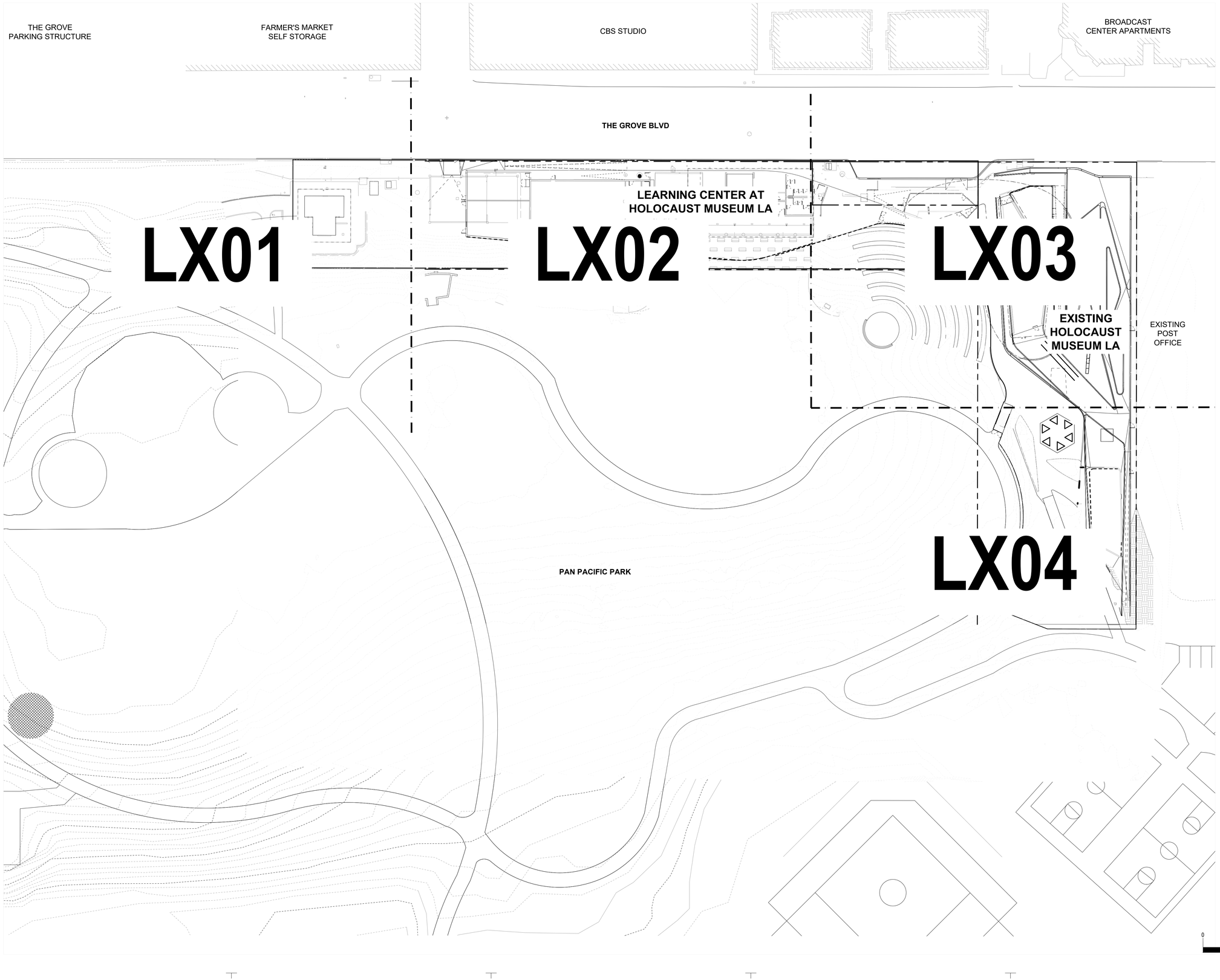

NOT FOR CONSTRUCTION

18.DEC.2020

ba
belzberg architects
2321 MAIN STREET
SANTA MONICA, CA 90405
310.453.9611
www.belzbergarchitects.com

STUDIO-MLA
251 South Mission Road
Los Angeles, California 90033
T. 213 384 3844 studio-mla.com

#	DESCRIPTION	DATE
25% DD PROGRESS		1/29/21

HOLOCAUST
MUSEUM LA
EXPANSION

100 THE GROVE DRIVE
LOS ANGELES, CA 90036

PROJECT
KEY PLAN

PROJECT NUMBER: 17009

L004

12/17/2020 12:49:20 AM

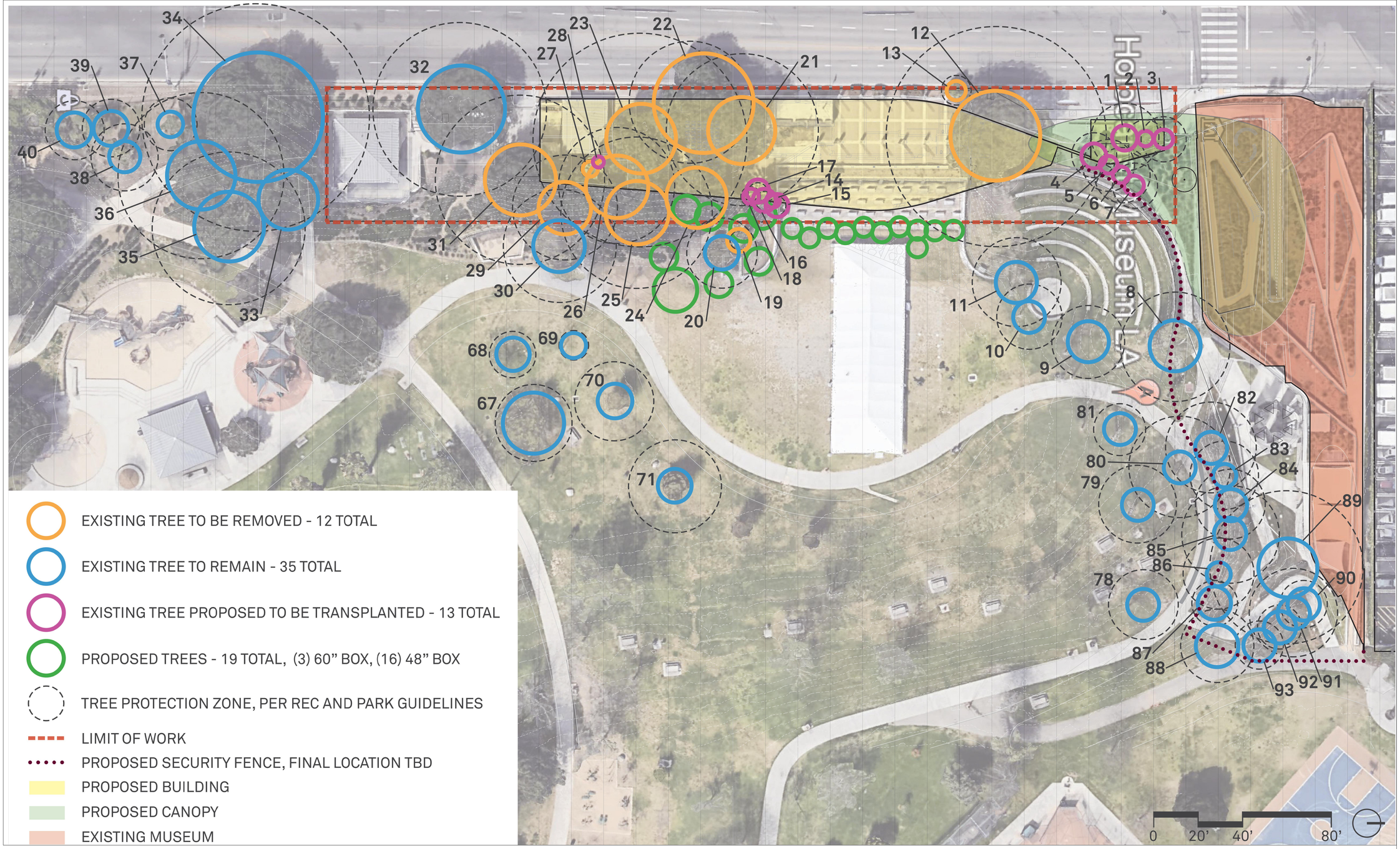

NOT FOR CONSTRUCTION

18.DEC.2020

ba
belzberg architects
2321 MAIN STREET
SANTA MONICA, CA 90405
310.453.9611
www.belzbergarchitects.com

STUDIO-MLA
251 South Mission Road
Los Angeles, California 90033
T. 213 384 3844 studio-mla.com

#	DESCRIPTION	DATE
25% DD PROGRESS		1/29/21

HOLOCAUST MUSEUM LA EXPANSION

100 THE GROVE DRIVE
LOS ANGELES, CA 90036

TREE DISPOSITION PLAN

PROJECT NUMBER: 17009

L100

12/17/2020 12:49:20 AM

IMAGES - EXISTING TREES

TREES #1-3

TREES #4-7

TREE #8

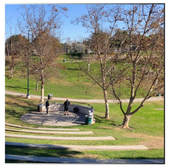
TREES #9-11

TREES #12

TREES #13

TREES #14-18

TREES #19 & 20

TREES #21, 22, & 23

TREE #22

TREES #23

TREES #24-26

TREES #28

TREES #25,26,29, & 31

TREES #79 & 80

TREES #81

TREES #82-83

TREES #84-87

NOTE: IMAGES SHOWN HERE ARE FOR REFERENCE AND DO NOT INCLUDE ALL TREES IDENTIFIED IN THE TREE INVENTORY LIST/PLAN

EXISTING TREE INVENTORY

Tree Tag #	Scientific Name	DBH (in) - 1st Trunk	DBH (in) - 2nd Trunk	Height (ft)	TPZ	Health Rating	Notes
1	*Olea europaea*	8	4.7	18	19.05	3	Future location to be determined.
2	*Olea europaea*	6.9		15	10.35	3	Future location to be determined.
3	*Olea europaea*	8.3		15	12.45	3	Future location to be determined.
4	*Olea europaea*	8.5		18	12.75	3	Future location to be determined.
5	*Olea europaea*	5	4.8	15	14.7	3	Future location to be determined.
6	*Olea europaea*	6.8	3.7	18	15.75	3	Future location to be determined.
7	*Olea europaea*	8.6		18	12.9	3	Future location to be determined.
8	*Platanus racemosa*	20.7		30	31.05	4	Existing tree is located near proposed stair. Tree Protection Zone (TPZ) extends into plaza and existing bldg. Further coordination with RAC is needed.
9	*Platanus racemosa*	13.5		25	20.25	4	
10	*Platanus racemosa*	12.2		25	18.3	4	
11	*Platanus racemosa*	16.5		25	24.75	4	
12	*Pinus eldarica*	41		40	61.5	4	
13	*Pittosporum undulatum*	7.5	3.5	10	16.5	3	
14	*Washingtonia filifera*	12		10	5	3	Future location to be determined.
15	*Washingtonia filifera*	12		20	5	3	Future location to be determined.
16	*Washingtonia filifera*	17		25	5	3	Future location to be determined.
17	*Washingtonia filifera*	16		20	5	3	Future location to be determined.
18	*Washingtonia filifera*	10		8	5	3	Future location to be determined.
19	*Washingtonia filifera*	18		25	5	3	Psomas recommends removing. Leaning on Oak
20	*Quercus agrifolia*	13.1		25	19.65	2	
21	*Pinus eldarica*	28.4		35	42.6	4	Currently being reviewed for transplanting
22	*Pinus eldarica*	22.6		35	33.9	4	Currently being reviewed for transplanting
23	*Pinus eldarica*	26.5	13.3	35	59.7	4	Currently being reviewed for transplanting
24	*Pinus eldarica*	23.1		30	34.65	4	Currently being reviewed for transplanting
25	*Pinus eldarica*	28.2		35	42.3	4	Currently being reviewed for transplanting
26	*Pinus eldarica*	21.6		25	32.4	3	Currently being reviewed for transplanting
27	*Washingtonia filifera*	16		35	5	3	
28	*Quercus agrifolia*	2.2	2.1	8	6.45	3	Future location to be determined.
29	*Pinus eldarica*	19.6		30	29.4	4	
30	*Pinus eldarica*	21.1		30	31.65	4	
31	*Pinus eldarica*	31.5		30	47.25	4	
32	*Pinus eldarica*	32.3		30	48.45	4	TPZ encroaches into building footprint. Further coordination with RAC is needed.
33	*Pinus eldarica*	36.2		45	54.3	4	
34	*Pinus eldarica*	42.5		30	63.75	3	
35	*Pinus eldarica*	28.5		40	42.75	4	
36	*Pinus eldarica*	31		35	46.5	4	
37	*Ceiba speciosa*	9.8		18	14.7	4	
38	*Ceiba speciosa*	12.5		20	18.75	4	
39	*Ceiba speciosa*	10.7		18	16.05	4	
40	*Ceiba speciosa*	11		20	16.5	4	
67	*Tipuana tipu*	14.3		25	21.45	4	
68	*Platanus racemosa*	8.7		25	13.05	4	
69	*Platanus racemosa*	5.5		15	8.25	4	
70	*Quercus suber*	14.7		25	22.05	4	
71	*Quercus suber*	17.3		25	25.95	4	
78	*Platanus racemosa*	13.3		25	19.95	3	
79	*Platanus racemosa*	14.5		25	21.75	3	
80	*Platanus racemosa*	19.1		25	28.65	3	
81	*Platanus racemosa*	9.8		25	14.7	3	
82	*Olea europaea*	9.1	7.9	25	25.5	2	Tree associated with donor plaque. Tree does not appear to be in good health. Pending further review
83	*Olea europaea*	8.7	4.1	20	19.2	2	Tree associated with donor plaque. Tree does not appear to be in good health. Pending further review
84	*Olea europaea*	13.1		25	19.65	2	Tree associated with donor plaque. Tree does not appear to be in good health. Pending further review
85	*Olea europaea*	11.2	7.1	20	27.45	2	Tree associated with donor plaque. Tree does not appear to be in good health. Pending further review
86	*Olea europaea*	7.3	6.1	18	20.1	2	Tree associated with donor plaque. Tree does not appear to be in good health. Pending further review
87	*Olea europaea*	8.5		20	12.75	2	Tree associated with donor plaque. Tree does not appear to be in good health. Pending further review
88	*Platanus racemosa*	13.7		20	20.55	4	
89	*Platanus X hispanica*	28.6		35	42.9	4	
90	*Olea europaea*	8.8		20	13.2	3	
91	*Olea europaea*	9.5	7.1	20	24.9	3	
92	*Olea europaea*	8.2		20	12.3	3	
93	*Olea europaea*	9.1		20	13.65	3	

Trees to be removed Trees to be relocated Trees to be remain

Note: Colors used in the above chart are associated with the Existing/Proposed Tree Plan (next page).

The table identifies existing trees by their Tree tag #, Scientific name, Caliper (diameter at breast height- DBH), Height, Health rating and Tree Protection Zone (TPZ) per City of Los Angeles Recreation and Parks replacement and tree protection specifications. Information within the table was provided from Psomas Exhibit 2 Tree Locations and Attachment A Tree Survey Data.

Trees that are determined to be removed are identified by the Tree Protection Zone (TPZ) encroaching into the proposed building footprint. The criteria which defines the TPZ and determination for replacement trees is included at the end of this document as provided by the City of LA Recreation and Parks department.

SUMMARY

Trees to be removed, due to potential construction conflict - 12 total
Trees proposed to be transplanted - 13 total
Proposed trees - 19 total (estimated 79" cumulative DBH total)
Note: Tree #28 (Coast Live Oak) is a Protected Species and will require a seperate replacement ratio, determined by City of LA Rec and Parks and/or Urban Forestry, sizes TBD

Cumulative DBH of trees to be removed: 302.3" total
Reduction to include proposed trees: 223.3" total

Mitigation requirements per City of LA Recreation and Parks are as follows:
Removed trees will need to be replaced by a 1:1 ratio determined by the sum of all removed tree calipers. To quantify the total number of replacement trees the following rule can be used:
- 24" box trees shall receive 2" of caliper mitigation each
- 36" box trees shall receive 3" of caliper mitigation each
- 48" box trees shall receive 4" of caliper mitigation each
- 60" box trees shall receive 5" of caliper mitigation each

Estimated quantities of replacement trees organized by tree box size are listed below. These quantities meet the cumulative DBH per tree box size. These quantites are individual totals for each tree box size, not to be interpreted as a combination to meet the requirement. However, replacement strategies can combine a mixture of tree box sizes to meet the 1:1 ratio beyond what's identified here.
- (111) 24" box trees
- (75) 36" box trees
- (59) 48" box trees
- (45) 60" box trees

CITY OF LA RECREATION AND PARKS - TREE PROTECTION SPECIFICATIONS

TREE PROTECTION SPECIFICATIONS

1.01 TREE PROTECTION

I. All trees that occur within the area of work, as shown on the plans, and not specifically designated for removal, shall be protected by the following means:

A. **Determining the Tree Protection Zone (TPZ) -** The **radius** (not the diameter) of the TPZ, measured from the outside of the tree trunk, shall be calculated by Recreation and Parks (RAP) Forestry according to the following:
1. **Single trunk trees -** multiply the trunk diameter in inches, measured 4.5' above grade, by 1.5 feet.
2. **Multi trunk trees -** multiply the sum of the diameters of all trunks in inches, measured 4.5' above grade, by 1.5 feet.
3. **Palm trees -** 5' from the base of the trunk.

B. Once determined, the TPZ is to be clearly shown on all plans, including concept plans, for discussion purposes, including at the RAP Capital Improvements Meetings.

C. Beyond the TPZ, the contractor shall also be responsible for protecting all trees within the boundaries of the construction zone, including vehicular access areas leading to the construction zone, lay down areas, and any other areas impacted by construction activities. Any damage to trees in these areas shall also be subject to the same monetary or replacement requirements specified in Section II below. Any necessary root cutting in this area must be confirmed with either the RAP or other approved arborist. See also the General Conditions for any damage done by the contractor to landscaping or other park amenities that fall outside the boundaries of the construction zone.

D. Within the boundaries of the construction zone (including the TPZ), the contractor shall be responsible for mitigating construction-related dust accumulation on all trees by spraying the trunks, limbs, and foliage with water to a maximum height of 30 feet during the months of April through November, at monthly intervals.

E. Within the TPZ, the contractor shall adhere to the following requirements, including, but not limited to:
1. No stockpiling or storage of any material, debris, or soil.
2. No storage of any construction equipment.
3. No vehicular access.
4. No cutting of roots.
5. No disturbance of soil or grade changes.
6. No objects of any kind to be attached to tree trunks.

F. The contractor shall install a 5' high temporary chain link fence with one pedestrian access gate along the boundary of the TPZ. See *5' HIGH TREE PROTECTION FENCE* detail at the end of the document.

G. The contractor shall provide one sign per each 20 lineal ft. of fence bordering the TPZ indicating that fencing shall not be removed. See sign detail that is included as part of the temporary chain link detail.

H. No work is permitted within the TPZ without the approval of each of the following: 1) the project landscape architect, 2) the project manager, and 3) RAP Forestry staff. Any work authorized within the TPZ must be done in accordance with the recommendations of a RAP arborist and under the supervision of a Monitoring Arborist. A Monitoring Arborist must be: 1) an ISA Certified Arborist or a Registered Consulting Arborist, with verifiable experience in protecting trees during construction; 2) approved by RAP Forestry. The Monitoring Arborist shall be hired and paid by the contractor.

I. Irrigation to all trees not specifically designated for removal shall be kept in operation for the duration of the project. Contractor shall be responsible for hand watering all impacted trees if necessitated by temporary shutdowns to existing irrigation systems. Trees are to be irrigated deeply and infrequently so that soil moisture is detectable at a minimum depth of 18" using a soil probe.

J. Upon job completion, contractor shall remove all items installed to protect trees during the construction process.

K. Any of the following Southern California native tree species fall under Ordinance No. 177404 of the Los Angeles Municipal Code:
1. Oaks, including Valley Oak (*Quercus lobata)*, California Live Oak (*Quercus agrifolia),* or any other tree of the oak genus indigenous to California but excluding Scrub Oak *(Quercus dumosa);*
2. Southern California Black Walnut *(Juglans californica* var. c*alifornica);*
3. Western Sycamore *(Platanus racemosa);*
4. California Bay *(Umbellularia californica).*

Contractor shall comply with the requirements of the ordinance found at: http://cityplanning.lacity.org/Code_Studies/Other/ProtectedTreeOrd.pdf.

II. Consequences of violating the Tree Protection Specifications:

A. ANY FAILURE BY THE CONTRACTOR TO ADHERE TO THE REQUIREMENTS SPECIFIED WITHIN THESE SPECIFICATIONS WILL RESULT IN THE SUSPENSION OF ALL CONSTRUCTION ACTIVITIES, TO BE DONE AT THE CONTRACTOR'S EXPENSE. THE CONTRACTOR SHALL BE RESPONSIBLE FOR PAYMENT FOR OR REPLACEMENT OF ANY TREES DAMAGED THROUGH NON-COMPLIANCE WITH THESE SPECIFICATIONS. The choice of whether the damaged trees are replaced or paid for will be determined by RAP Forestry.
1. **Monetary valuations** for damaged trees will be determined by RAP Forestry.
2. **How RAP determines the quantity, species, and location of replacement trees:**
   a) Measuring the diameter of the tree(s) being replaced:
      1) For single trunk trees, the diameter (DBH) is measured 4.5' above the ground.
      2) For multi-trunk trees, the DBH of each of the multiple trunks is measured 4.5' above the ground, then all are summed to arrive at a single diameter value.
   b) The ratio of the sum of calipers (as defined by RAP Nursery Specifications) of new trees planted vs. the sum of the diameters of existing trees removed shall be at least 1:1. The specific number of replacement trees will be determined by RAP Forestry staff and the project landscape architect.
   c) If the replacement ratio cannot be achieved within the project boundaries, then one of the following shall apply:
      1) Deliver the trees to RAP Forestry.
      2) Deliver the trees to the nearest RAP service yard.
      3) Plant the trees beyond the project on an approved, area-wide basis.
   d) RAP Forestry staff and the project landscape architect shall determine the replacement tree species/planting location and shall also ensure the health/quality of the trees.

O:\ARCH_ENG\Tree Protection\2018 Updates-Tree Protection Specs\Tree Protection Specifications - Nov 2018.doc
O:\ARCH_ENG\Tree Protection\2018 Updates-Tree Protection Specs\Tree Protection Specifications - Nov 2018.doc

NOT FOR CONSTRUCTION

18.DEC.2020

ba
belzberg architects
2321 MAIN STREET
SANTA MONICA, CA 90405
310.453.9611
www.belzbergarchitects.com

STUDIO-MLA
251 South Mission Road
Los Angeles, California 90033
T. 213 384 3844 studio-mla.com

#	DESCRIPTION	DATE
25% DD PROGRESS		1/29/21

HOLOCAUST MUSEUM LA EXPANSION

100 THE GROVE DRIVE
LOS ANGELES, CA 90036

TREE DISPOSITION PLAN

PROJECT NUMBER: 17009

L102

12/17/2020 12:49:20 AM

CONSTRUCTION NOTES

1. DRAWING IS DIAGRAMMATIC. VERIFY ALL CONDITIONS AND LOCATIONS ON SITE PRIOR TO THE START OF CONSTRUCTION. NOTIFY LANDSCAPE ARCHITECT IMMEDIATELY IF ANY ERRORS OR DISCREPANCIES ARE FOUND, BEFORE PROCEEDING WITH ANY WORK.
2. DO NOT SCALE DRAWINGS. USE DIMENSIONS AS INDICATED ON PLAN.
3. DO NOT WILLFULLY PROCEED WITH CONSTRUCTION WHEN IT IS OBVIOUS THAT OBSTRUCTIONS AND/OR GRADE DIFFERENCES EXIST THAT MAY NOT HAVE BEEN APPARENT DURING DESIGN. OBTAIN DIRECTION BEFORE PROCEEDING WITH CONSTRUCTION IN SUCH CASES.
4. THE LOCATION OF ALL SERVICE RUNS, SUCH AS WATER SUPPLY, ELECTRICAL (OVERHEAD AND UNDERGROUND), TELEPHONE, SANITARY SEWER, ETC. SHOULD BE ASCERTAINED BEFORE WORK IS STARTED. WHERE THEY WILL BE AFFECTED BY EXCAVATION OR WHERE MACHINES MAY BE WORKING NEARBY, THEY SHOULD BE CAREFULLY SEALED, PROTECTED, OR DIVERTED. NOTIFY LANDSCAPE ARCHITECT OF ANY CONFLICT WITH PROPOSED IMPROVEMENTS.
5. COORDINATE ALL UTILITY RUNS AND INSTALLATIONS (EXISTING AND NEW) PRIOR TO PAVING INSTALLATION. VERIFY ALL SLEEVES AND ELECTRIC SOURCES FOR IRRIGATION CLOCK AND LIGHTING WITH PROPER SUB-CONTRACTORS.
6. CLEAN OUT AND ADJUST EXISTING DRAINS TO ACCOMMODATE PROPOSED DRAINAGE. ADJUST LATERAL DRAIN LINES AS NECESSARY TO BEST LINK EXISTING MAIN LINES.
7. OBTAIN INSPECTION AND APPROVAL OF ALL FORMS PRIOR TO PLACING CONCRETE.
8. TRANSITIONS FROM EXISTING PAVING TO NEW PAVING SHALL BE FLUSH.
9. REFER TO PLANS AND GENERAL NOTES FOR ADDITIONAL NOTES AND INFORMATION REGARDING THE CONSTRUCTION OF THIS PROJECT.
10. CONSTRUCT ALL WALLS, PAVING, DRAIN LINES, SLEEVING, ETC. PER PLAN AND DETAILS.
11. CONCRETE TO SLOPE FROM FOUNDATION TOWARDS DRAIN INLETS AND DRAINAGE SWALES AT A MINIMUM RATE OF 1/8" PER FOOT. INSTALL CONCRETE FORMS WITH LONG, SMOOTH GRADIENTS TO ELIMINATE DIPS, RIDGES, ABRUPT CHANGES OF GRADE, AND SHARP TRANSITIONS.
12. INSTALL EXPANSION JOINTS AT ALL VERTICAL ELEMENTS INSTALL CRACK CONTROL JOINTS AT MAX. 12'-0". ZIP JOINTS WILL NOT BE ALLOWED. INSTALL EJ'S AND CCJ'S AT 90° TO THE EDGE OF CONCRETE PAVING. SEE PLAN FOR ADDITIONAL INFORMATION AND LOCATIONS.
13. PRIOR TO PLACING CONCRETE, SUFFICIENTLY MOISTEN THE SUBGRADE AND PROVIDE SUBGRADE PREPARATIONS PER THE SOILS ENGINEER.
14. INSTALL TYPE II OR TYPE V CONCRETE THAT OBTAINS A MINIMUM COMPRESSIVE STRENGTH OF 2,500 P.S.I. AT 28 DAYS UNLESS OTHERWISE SPECIFIED ON THESE PLANS AND DETAILS. SUBMIT DESIGN MIXES AND CONCRETE SAMPLE TO OWNER AND LANDSCAPE ARCHITECT PRIOR TO LAYING OUT FORMS. INSTALL CONCRETE FLATWORK PER RECOMMENDATIONS OF SOILS ENGINEER AND SOILS REPORT. IN CASE OF CONFLICT BETWEEN SOILS REPORT AND DETAILS, THE MOST STRINGENT REQUIREMENTS WILL APPLY.
15. BACKFILL AND COMPACT BEHIND ALL WALLS AND MASONRY STRUCTURES, AS REQUIRED ON DRAWINGS AND DETAILS. BACKFILL PLANTERS WITH TOP GRADE SANDY-LOAM TOPSOIL PER PLANTING NOTES.
16. CLEAN UP AND REMOVE ALL DEBRIS FROM SITE PRIOR TO REQUESTING FINAL APPROVAL. GRADE ALL AREAS WITHIN .5 INCH OF FINISH GRADES. NOTE AREAS OF ADDITIONAL GRADING SHOWN. COORDINATE WITH LANDSCAPE ARCHITECT THE FINAL FORM OF LANDSCAPE MOUNDS.

REFERENCE NOTES SCHEDULE

	AMENITIES							
SYMBOL	DESCRIPTION	QTY	DETAIL	MODEL	FINISH	COLOR	MANUFACTURER	
A-101	SECURITY BOLLARD	14	1/L630	TBD	STAINLESS STEEL SATIN	TBD	TBD	
A-102	BENCH AT REFLECTION GARDEN	42 LF	2/L611	CUSTOM	SEE DETAIL	SEE DETAIL	CUSTOM	
A-103	CHARRED LOGS AT REFLECTION GARDEN	50		ANGEL CITY LUMBER	CHARRED LOGS, SIZES VARY (6"DIA X 8" LONG OR 9" DIA X 6" LONG)	SHOU SUGI BAN		CHARRED LOGS TO BE TREATED IN THE METHOD OF SHOU SUGI BAN
	FENCE							
SYMBOL	DESCRIPTION	QTY	DETAIL	MATERIAL	FINISH	COLOR	MANUFACTURER	
F-101	SECURITY PICKET FENCE	144 LF	1/L620	SEE DETAIL	PAINTED	TBD	CUSTOM	
	GATE							
SYMBOL	DESCRIPTION	QTY	DETAIL	MATERIAL	FINISH	COLOR	MANUFACTURER	
G-101	GATE AT SECURITY PICKET FENCE	3	1/L621	SEE DETAIL	PAINTED	TBD	CUSTOM	
	BOULDER							
SYMBOL	DESCRIPTION	QTY	DETAIL	MATERIAL	FORM	COLOR	SUPPLIER	
K-101	BOULDERS AT EQUITY PLAZA	3	6/L601	TBD	TBD	TBD		
K-102	BOULDERS AT PLAZA	5	6/L601	TBD	TBD	TBD		
K-103	BOULDERS AT REFLECTION GARDEN	15	6/L601	CLEFT BENCH BOULDERS	CLEFT FACE	TBD	SOUTHWEST BOULDER AND STONE	
	PAVING							
SYMBOL	DESCRIPTION	QTY	DETAIL	MATERIAL	FINISH	COLOR	MANUFACTURER	REMARKS
P-101	DECORATIVE CONCRETE PAVING	4,239 SF	2/L601	CIP CONCRETE PAVING	TOPCAST 25	INTEGRAL COLOR TBD	TRADEMARK OR EQUAL	
P-102	VEHICULAR CONCRETE PAVING	1,565 SF	2/L601	CIP CONCRETE PAVING	TOPCAST 25	INTEGRAL COLOR TBD	TRADEMARK OR EQUAL	
P-103	DECORATIVE CONCRETE PAVING AT PLAZA- TYPE 1	1,027 SF	2/L601	CIP CONCRETE PAVING	GROUND FINISH, 400 GRIT	DAVIS DARK GRAY 860	TRADEMARK OR EQUAL	TO INCLUDE 1/2"-1" CHINA WHITE AGGREGATES (100%)
P-104	DECORATIVE CONCRETE PAVING AT PLAZA- TYPE 2	4,747 SF	2/L601	CIP CONCRETE PAVING	TOPCAST 05	DAVIS DARK GRAY 860	TRADEMARK OR EQUAL	
P-110	DECORATIVE CONCRETE STAIRS	244 SF	TBD	CIP CONCRETE STAIRS	TOPCAST 05	INTEGRAL COLOR TBD	TRADEMARK OR EQUAL	
P-301	DECOMPOSED GRANITE PAVING	284 SF	4/L601	SOUTHWEST BOULDER AND STONE	DECOMPOSED GRANITE WITH INTEGRAL STABILIZER	GRAPHITE GRAY	SOUTHWEST BOULDER AND STONE	
P-302	DECORATIVE GRAVEL AT REFLECTION GARDEN	326 SF	5/L601	1"-3" BLACK KNIGHT SLATE CHIPS	LOOSE		SOUTHWEST BOULDER AND STONE	
P-303	DECORATIVE GRAVEL AT EXISTING MUSEUM ROOF	8,268 SF	7/L601	1"-3" BLACK KNIGHT SLATE CHIPS	LOOSE	-	SOUTHWEST BOULDER AND STONE	
P-304	DECORATIVE GRAVEL INFILL AT EQUITY COURTYARD	421 SF	3/L601	3/8" INDIGO CRUSHED BASALT CHIPS	WITH BINDER	NATURAL	SOUTHWEST BOULDER AND STONE	BINDER: GRAVEL LOK- SOUTHWEST BOULDER AND STONE. GRAVEL LOK TO BE MATTE FINISH, NO GLOSS
	RAILING							
SYMBOL	DESCRIPTION	QTY	DETAIL	MATERIAL	FINISH	COLOR	MANUFACTURER	
R-101	HANDRAIL AT STAIRS	20 LP	3/L621	1.67" DIA. STAINLESS STEEL	SATIN #4	-	CUSTOM	
	WALL							
SYMBOL	DESCRIPTION	QTY	DETAIL	MATERIAL	FINISH	COLOR	MANUFACTURER	
W-101	CIP CONCRETE PLANTER WALL	441 LF	1/L610	CIP CONCRETE	TOPCAST 05 OR EQUAL	INTEGRAL COLOR TBD	TRADEMARK OR EQUAL	
W-102	CIP CONCRETE SEATWALL AT PLAZA	225 LF	2/L610	TRADEMARK OR EQUAL	CIP CONCRETE	TBD	TBD	
W-103	CIP CONCRETE PLANTER CURB AT PLAZA	27 LF	3/L610	CIP CONCRETE	TOPCAST 05 OR EQUAL	INTEGRAL COLOR TBD	TRADEMARK OR EQUAL	
W-104	CIP CONCRETE SEATWALL AT SOUTH PLAZA	32 LF	4/L610	CIP CONCRETE	TOPCAST 05	INTEGRAL COLOR TBD	TRADEMARK OR EQUAL	
W-301	METAL WALL AT REFLECTION GARDEN	15 LF	1/L611	1/2" THICK, BLACKENED STEEL	-	-	CUSTOM	

NOT FOR CONSTRUCTION

18.DEC.2020

belzberg architects
2321 MAIN STREET
SANTA MONICA, CA 90405
310.453.9611
www.belzbergarchitects.com

STUDIO-MLA
251 South Mission Road
Los Angeles, California 90033
T. 213 384 3844 studio-mla.com

#	DESCRIPTION	DATE
25%	DD PROGRESS	1/29/21

HOLOCAUST MUSEUM LA EXPANSION

100 THE GROVE DRIVE
LOS ANGELES, CA 90036

CONSTRUCTION SCHEDULES AND NOTES

PROJECT NUMBER: 17009

L200

12/17/2020 12:48:20 AM

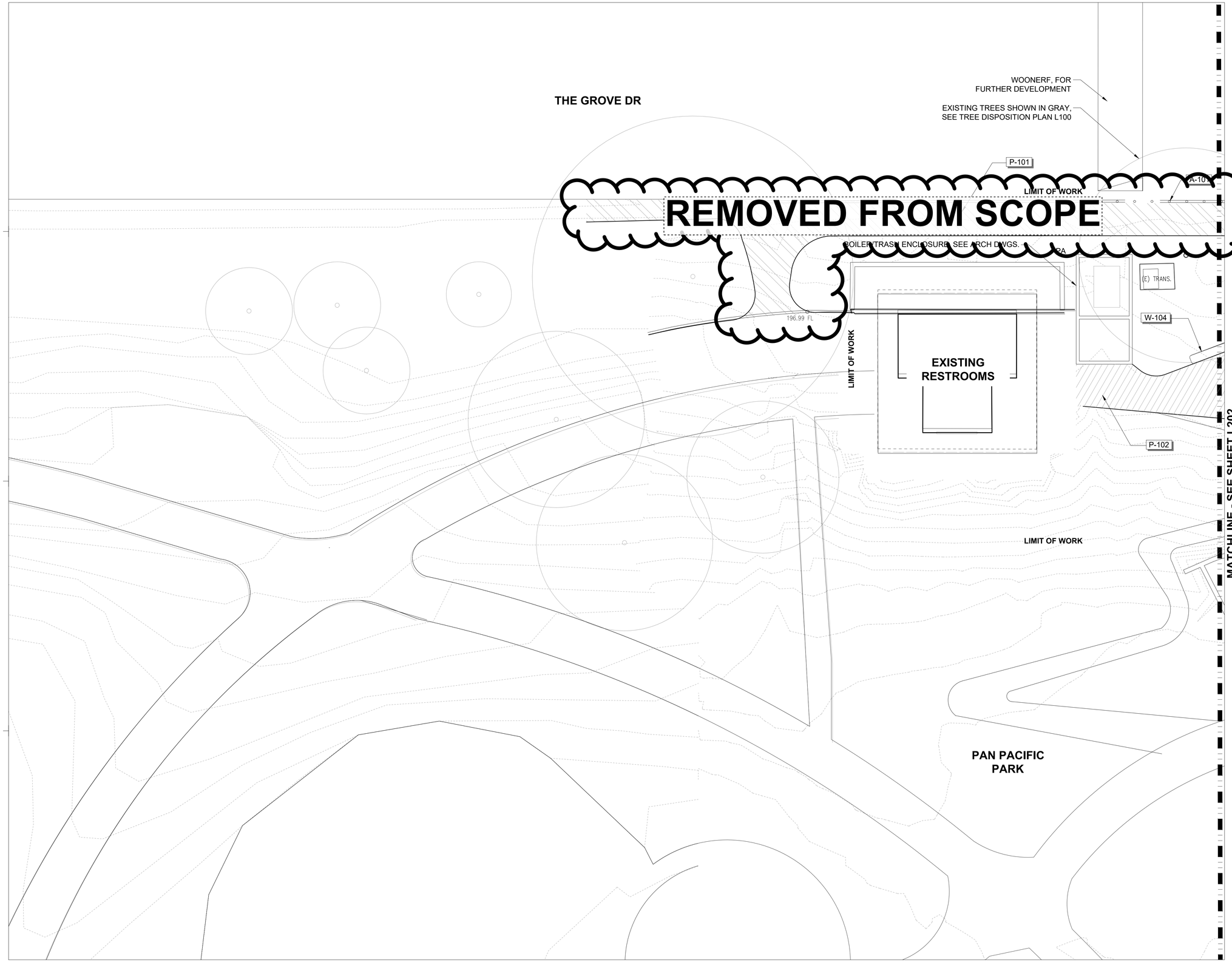

NOT FOR CONSTRUCTION

18.DEC.2020

ba
belzberg architects
2321 MAIN STREET
SANTA MONICA, CA 90405
310.453.9611
www.belzbergarchitects.com

STUDIO-MLA
251 South Mission Road
Los Angeles, California 90033
T. 213 384 3844 studio-mla.com

#	DESCRIPTION	DATE
25%	DD PROGRESS	1/29/21

HOLOCAUST
MUSEUM LA
EXPANSION

100 THE GROVE DRIVE
LOS ANGELES, CA 90036

KEY PLAN

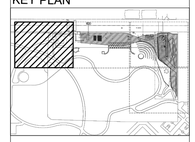

CONSTRUCTION
PLAN

PROJECT NUMBER: 17009

L201

12/17/2020 12:48:20 AM

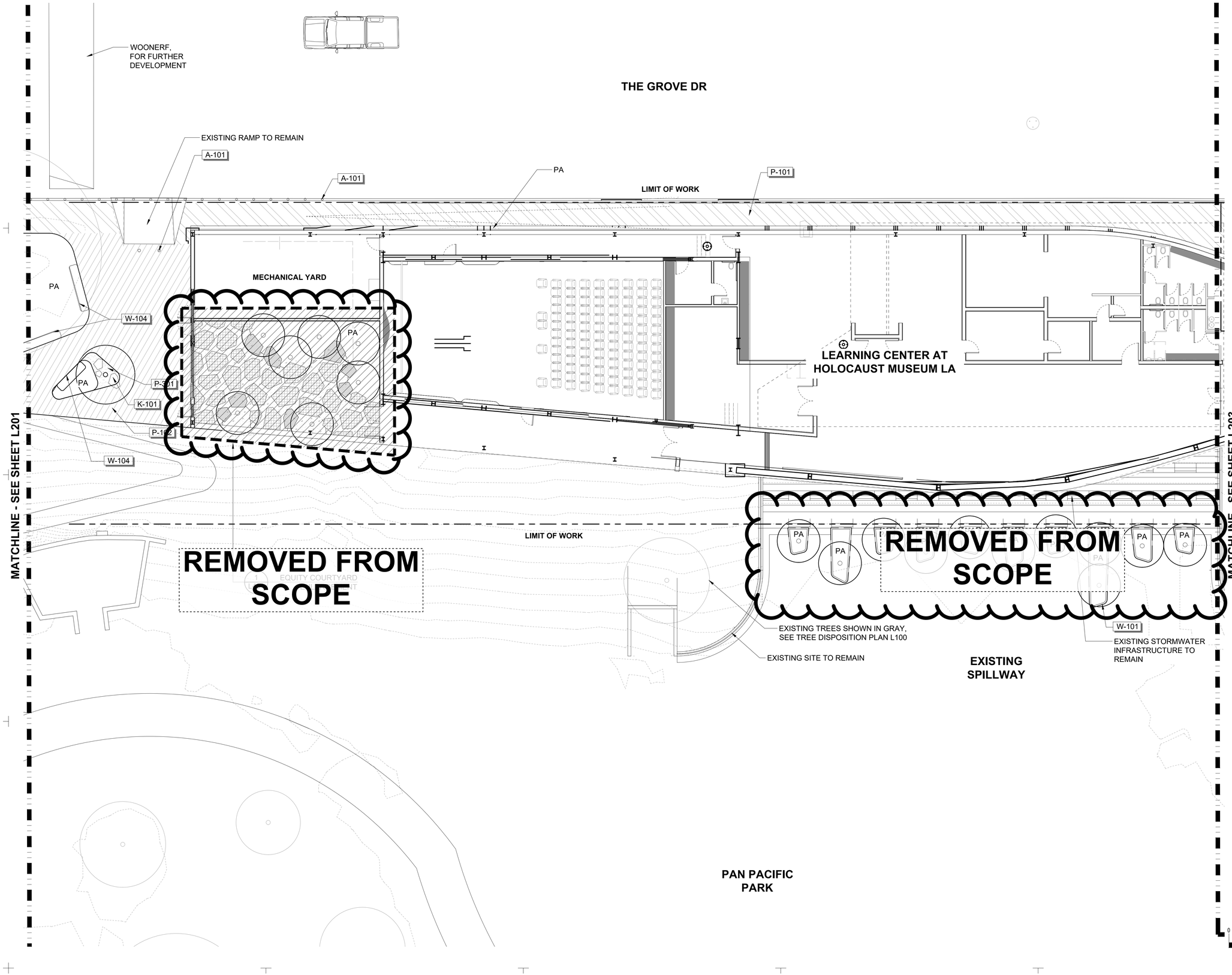

NOT FOR CONSTRUCTION

18.DEC.2020

ba
belzberg architects
2321 MAIN STREET
SANTA MONICA, CA 90405
310.453.9611
www.belzbergarchitects.com

STUDIO-MLA
251 South Mission Road
Los Angeles, California 90033
T. 213 384 3844 studio-mla.com

#	DESCRIPTION	DATE
25% DD PROGRESS		1/29/21

HOLOCAUST
MUSEUM LA
EXPANSION

100 THE GROVE DRIVE
LOS ANGELES, CA 90036

KEY PLAN

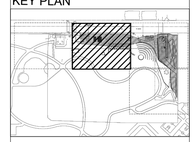

CONSTRUCTION
PLAN

PROJECT NUMBER: 17009

L202

12/17/2020 12:49:20 AM

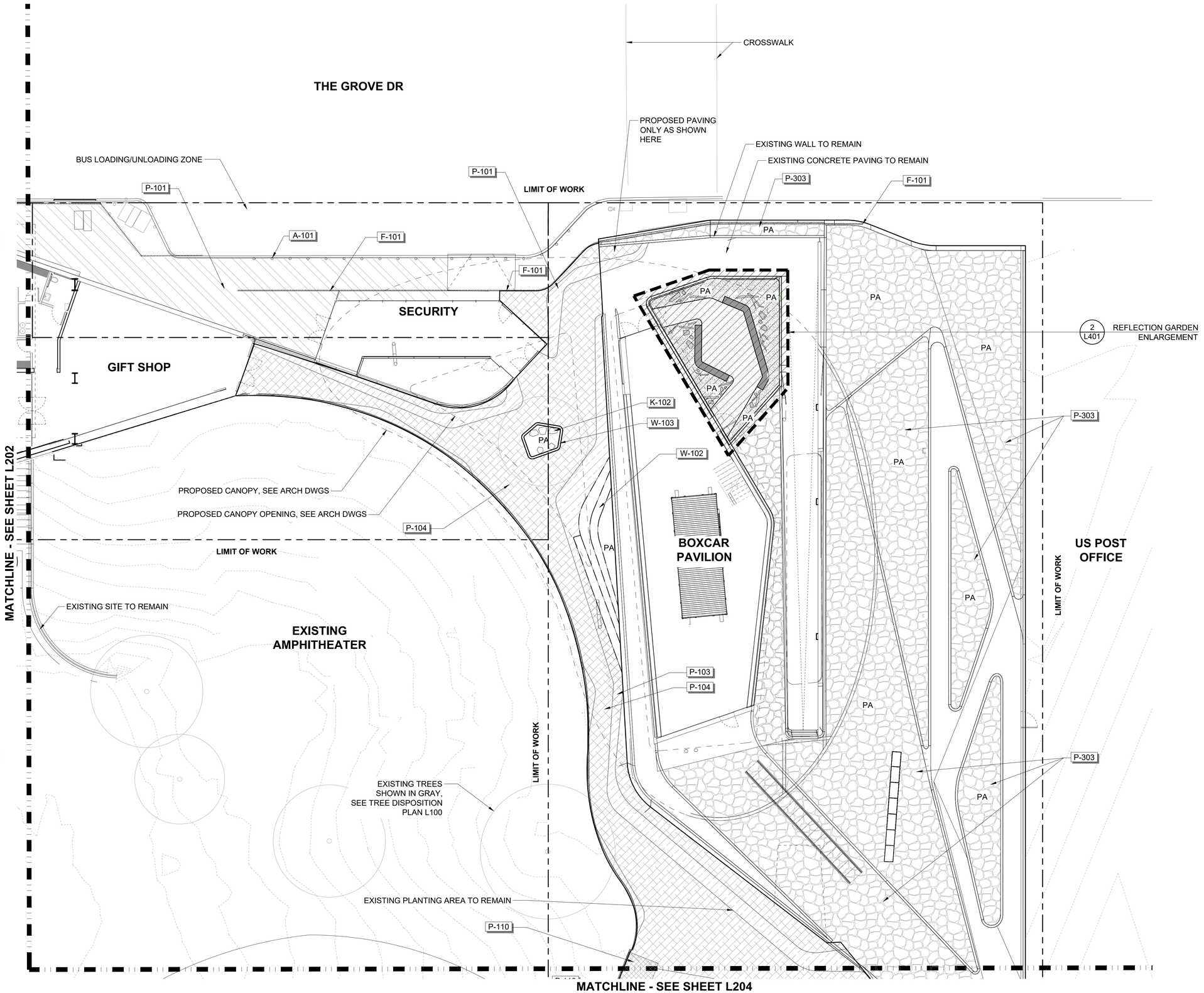

NOT FOR CONSTRUCTION

18.DEC.2020

ba
belzberg architects
2321 MAIN STREET
SANTA MONICA, CA 90405
310.453.9611
www.belzbergarchitects.com

STUDIO-MLA
251 South Mission Road
Los Angeles, California 90033
T. 213 384 3844 studio-mla.com

#	DESCRIPTION	DATE
25% DD PROGRESS		1/29/21

HOLOCAUST MUSEUM LA EXPANSION

100 THE GROVE DRIVE
LOS ANGELES, CA 90036

KEY PLAN

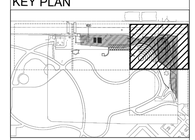

CONSTRUCTION PLAN

PROJECT NUMBER: 17009

L203

N

0 5' 10' 20'
1" = 10'

12/17/2020 12:48:20 AM

MATCHLINE - SEE SHEET L203

P-110

R-101

G-101

F-101

MARTYR'S MEMORIAL

PA

PA

P-303

P-103

P-103

P-104

LIMIT OF WORK

US POST OFFICE

LIMIT OF WORK

CHILDREN'S MEMORIAL

PROPOSED ARCHITECTURAL CANOPY, SEE ARCH DWGS

PAN PACIFIC PARK

EXISTING TREES SHOWN IN GRAY, SEE TREE DISPOSITION PLAN L100

EXISTING CONCRETE PAVING TO REMAIN

F-101

G-101

P-110

F-101

G-101

LIMIT OF WORK

F-101

N

0 15' 30' 60'

1" = 30'

NOT FOR CONSTRUCTION

18.DEC.2020

ba
belzberg architects
2321 MAIN STREET
SANTA MONICA, CA 90405
310.453.9611

www.belzbergarchitects.com

STUDIO-MLA
251 South Mission Road
Los Angeles, California 90033
T. 213 384 3844 studio-mla.com

#	DESCRIPTION	DATE
25% DD PROGRESS		1/29/21

HOLOCAUST MUSEUM LA EXPANSION

100 THE GROVE DRIVE
LOS ANGELES, CA 90036

KEY PLAN

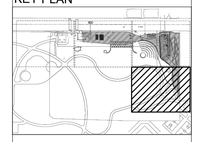

CONSTRUCTION PLAN

PROJECT NUMBER: 17009

L204

12/17/2020 12:49:20 AM

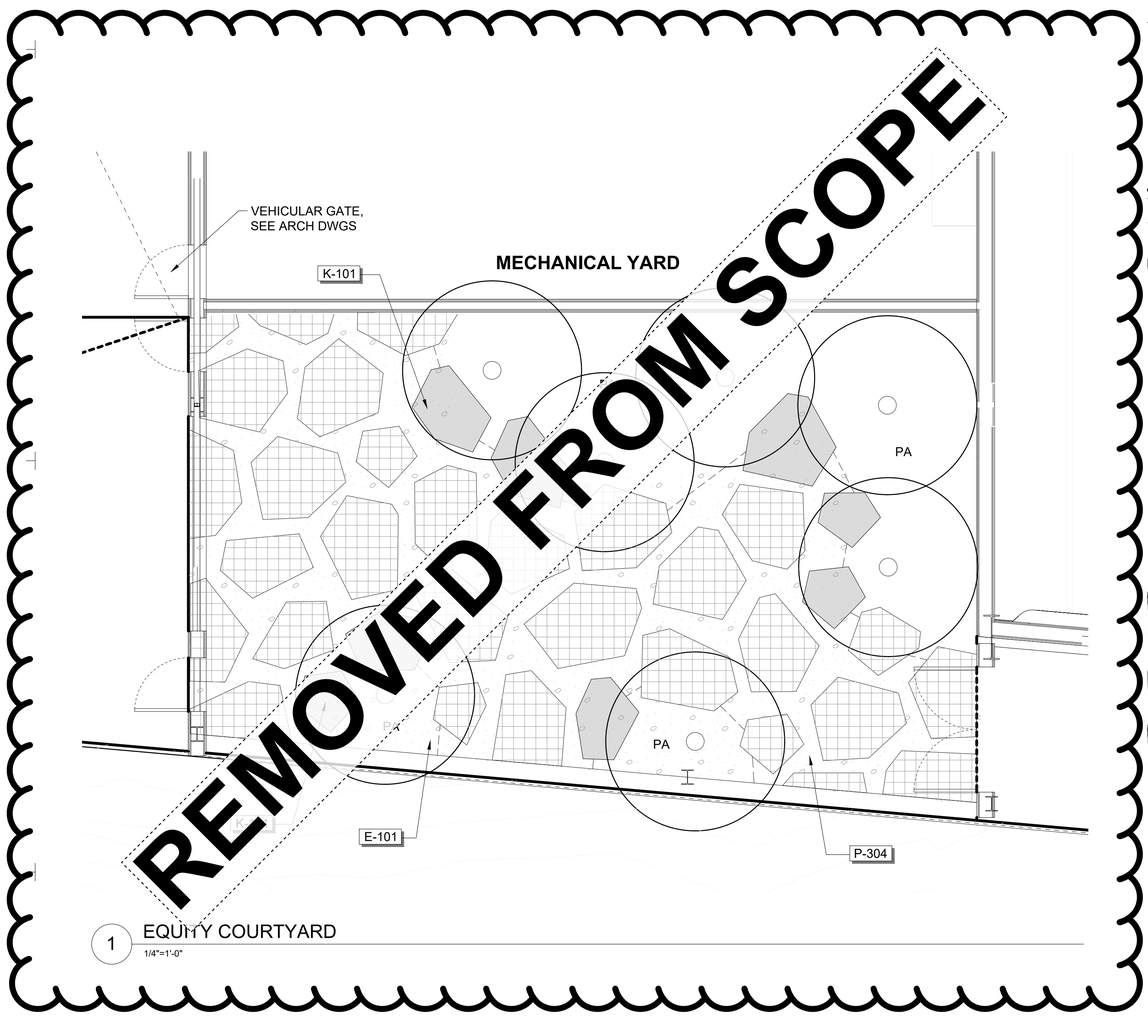

1 EQUITY COURTYARD
1/4"=1'-0"

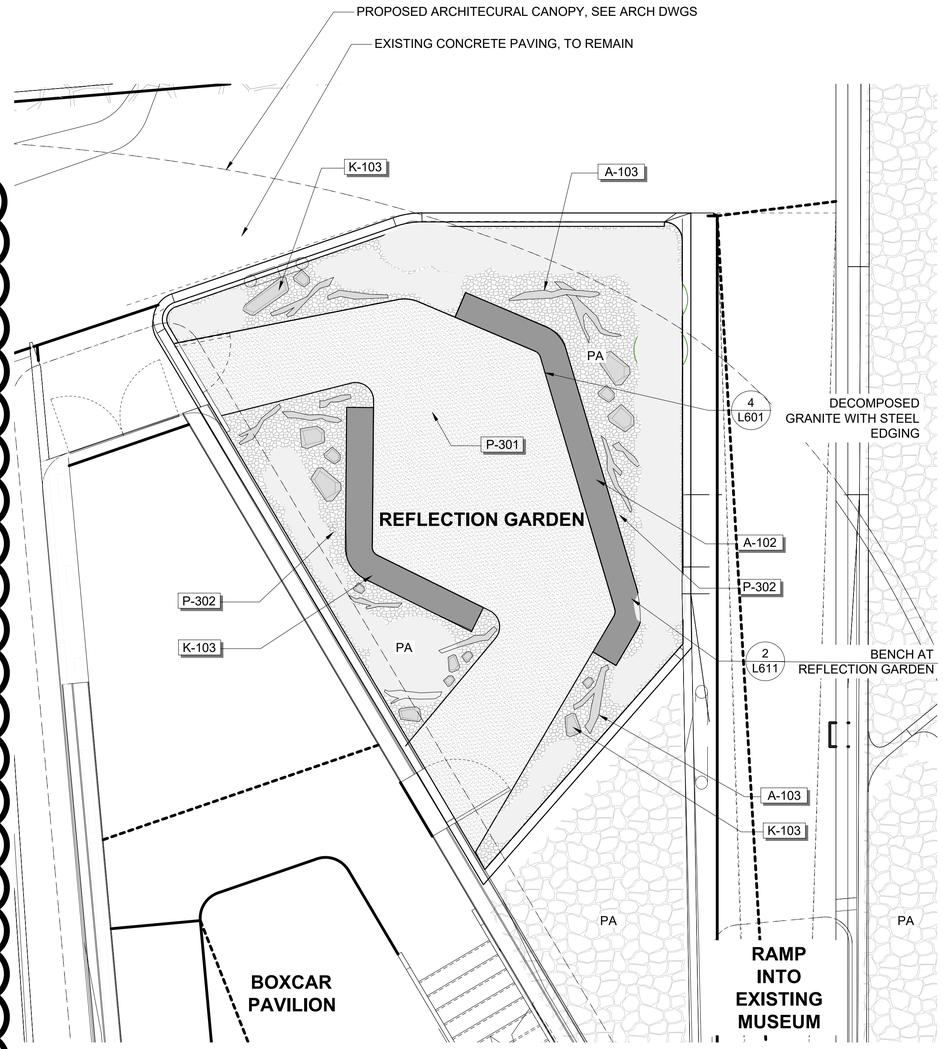

2 REFLECTION GARDEN
1/4"=1'-0"

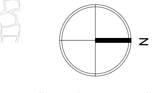

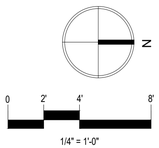

NOT FOR CONSTRUCTION

18.DEC.2020

belzberg architects
2321 MAIN STREET
SANTA MONICA, CA 90405
310.453.9611
www.belzbergarchitects.com

STUDIO-MLA
251 South Mission Road
Los Angeles, California 90033
T. 213 384 3844 studio-mla.com

#	DESCRIPTION	DATE
25% DD PROGRESS		1/29/21

HOLOCAUST MUSEUM LA EXPANSION

100 THE GROVE DRIVE
LOS ANGELES, CA 90036

KEY PLAN

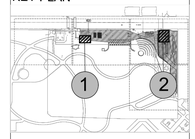

ENLARGEMENT PLAN

PROJECT NUMBER: 17009

L401

12/17/2020 12:48:20 AM

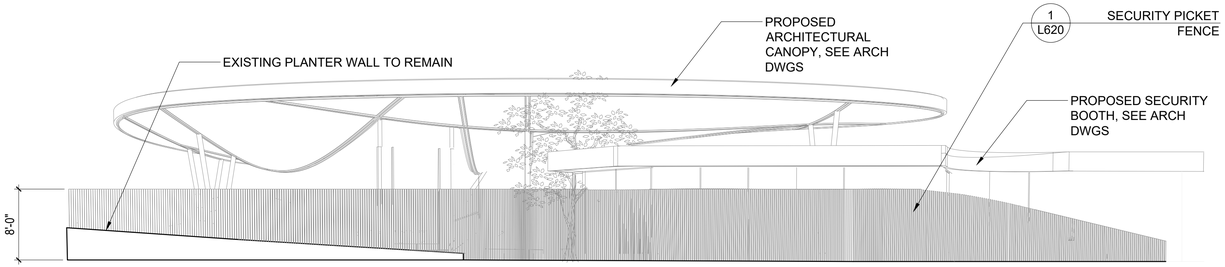

1 FENCE ELEVATION A

1/8"=1'-0"

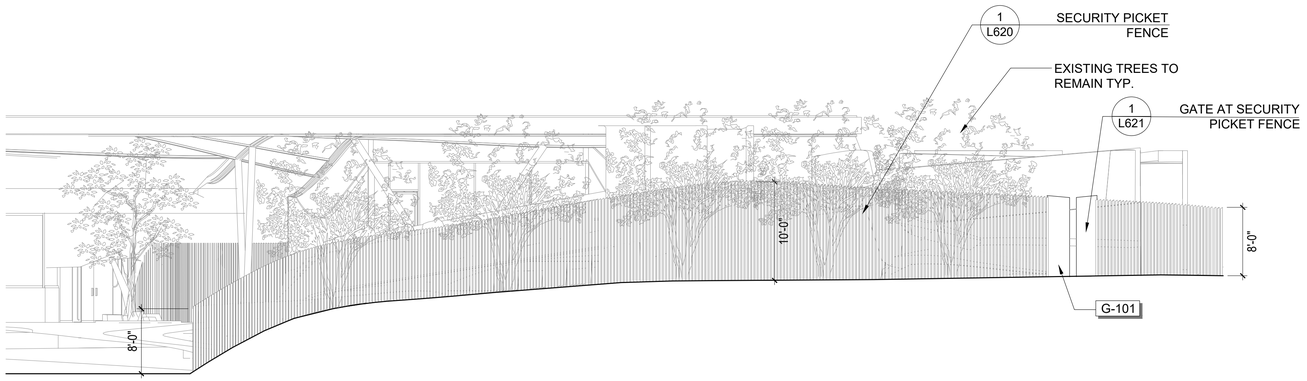

2 FENCE ELEVATION B

1/8"=1'-0"

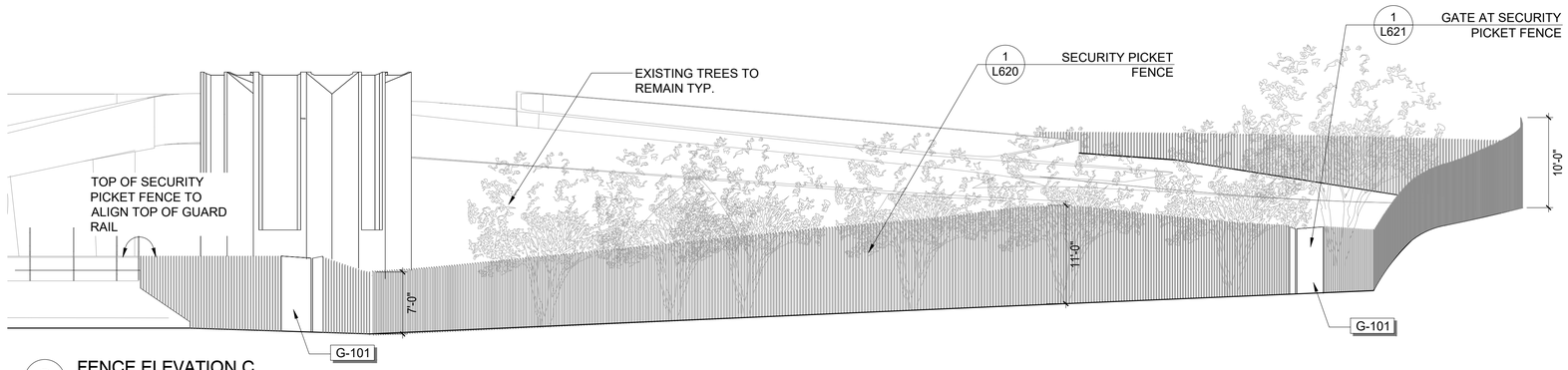

3 FENCE ELEVATION C

1/8"=1'-0"

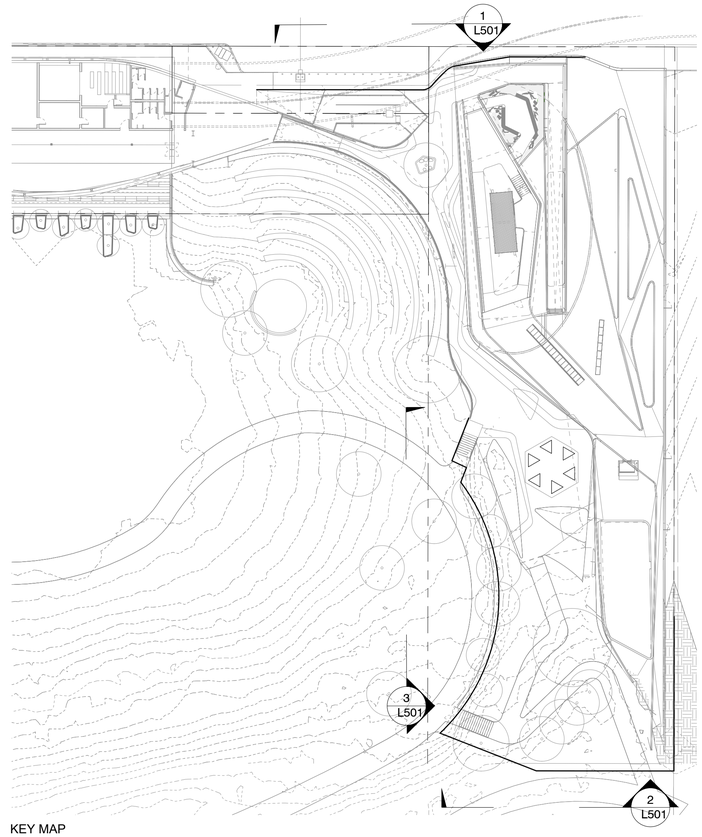

KEY MAP

NOTE: REFER TO CIVIL DRAWINGS FOR GRADING AND ELEVATIONS

NOTE: GRAPHICS SHOWN FOR DESIGN INTENT. NOT FOR CONSTRUCTION.

NOT FOR CONSTRUCTION

18.DEC.2020

ba
belzberg architects
2321 MAIN STREET
SANTA MONICA, CA 90405
310.453.9611
www.belzbergarchitects.com

STUDIO-MLA
251 South Mission Road
Los Angeles, California 90033
T. 213 384 3844 studio-mla.com

#	DESCRIPTION	DATE
25% DD PROGRESS		1/29/21

HOLOCAUST MUSEUM LA EXPANSION

100 THE GROVE DRIVE
LOS ANGELES, CA 90036

ELEVATIONS & SECTIONS

PROJECT NUMBER: 17009

L501

12/17/2020 12:48:20 AM

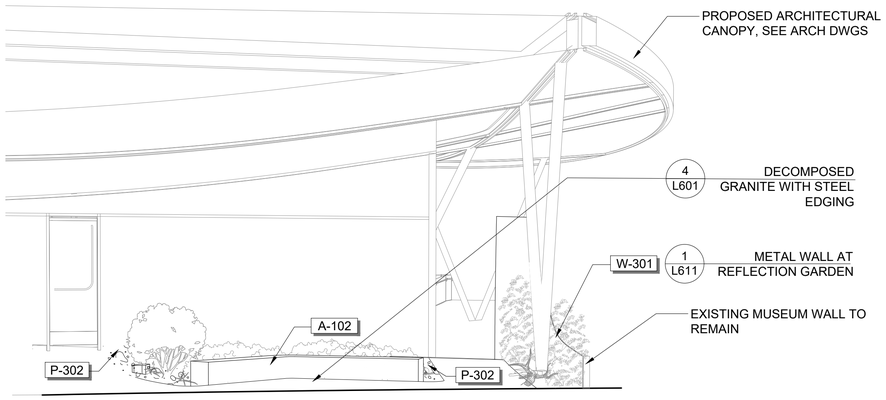

1 REFLECTION GARDEN SECTION A

1/4"=1'-0"

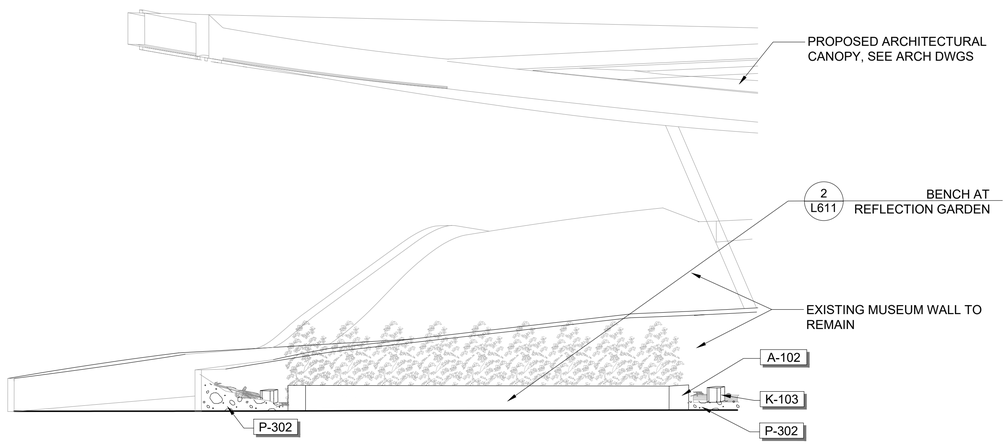

2 REFLECTION GARDEN SECTION B

1/4"=1'-0"

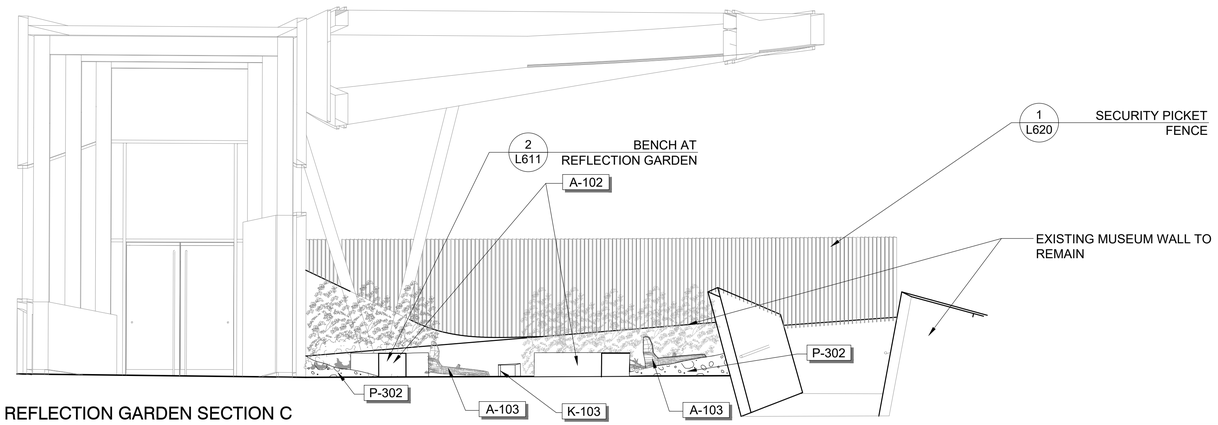

3 REFLECTION GARDEN SECTION C

1/4"=1'-0"

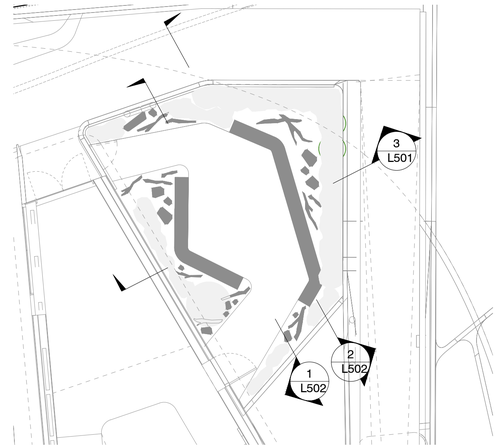

KEY MAP

NOTE: REFER TO CIVIL DRAWINGS FOR GRADING AND ELEVATIONS

NOTE: GRAPHICS SHOWN FOR DESIGN INTENT. NOT FOR CONSTRUCTION.

NOT FOR CONSTRUCTION

18.DEC.2020

ba
belzberg architects
2321 MAIN STREET
SANTA MONICA, CA 90405
310.453.9611
www.belzbergarchitects.com

STUDIO-MLA
251 South Mission Road
Los Angeles, California 90033
T. 213 384 3844 studio-mla.com

#	DESCRIPTION	DATE
	25% DD PROGRESS	1/29/21

HOLOCAUST MUSEUM LA EXPANSION

100 THE GROVE DRIVE
LOS ANGELES, CA 90036

ELEVATIONS & SECTIONS

PROJECT NUMBER: 17009

L502

12/17/2020 12:49:20 AM

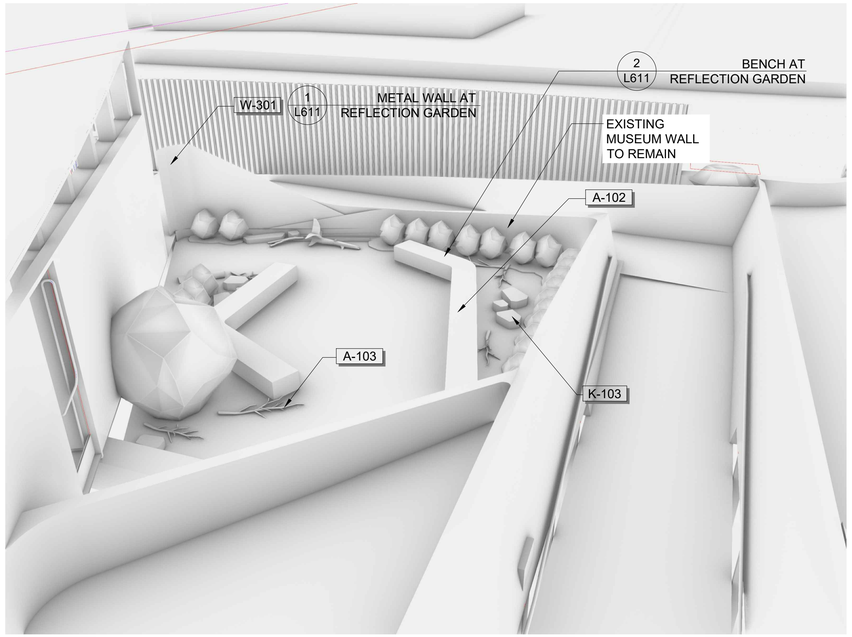

1 REFLECTION GARDEN RENDERING A

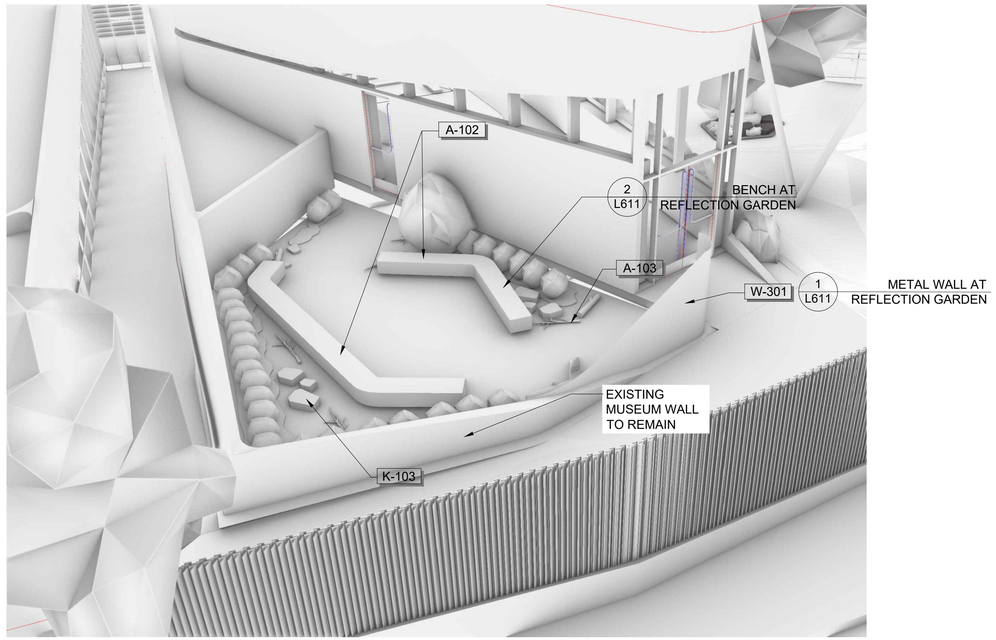

2 REFLECTION GARDEN RENDERING B

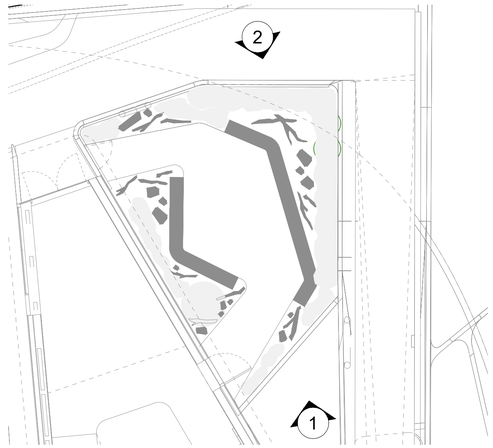

KEY MAP

NOTE: REFER TO CIVIL DRAWINGS FOR
GRADING AND ELEVATIONS

NOTE: GRAPHICS SHOWN FOR DESIGN INTENT. NOT FOR CONSTRUCTION.

NOT FOR CONSTRUCTION

18.DEC.2020

ba
belzberg architects
2321 MAIN STREET
SANTA MONICA, CA 90405
310.453.9611
www.belzbergarchitects.com

STUDIO-MLA
251 South Mission Road
Los Angeles, California 90033
T. 213 384 3844 studio-mla.com

#	DESCRIPTION	DATE
	25% DD PROGRESS	1/29/21

HOLOCAUST
MUSEUM LA
EXPANSION

100 THE GROVE DRIVE
LOS ANGELES, CA 90036

ELEVATIONS &
SECTIONS

PROJECT NUMBER: 17009

L503

12/17/2020 12:49:20 AM

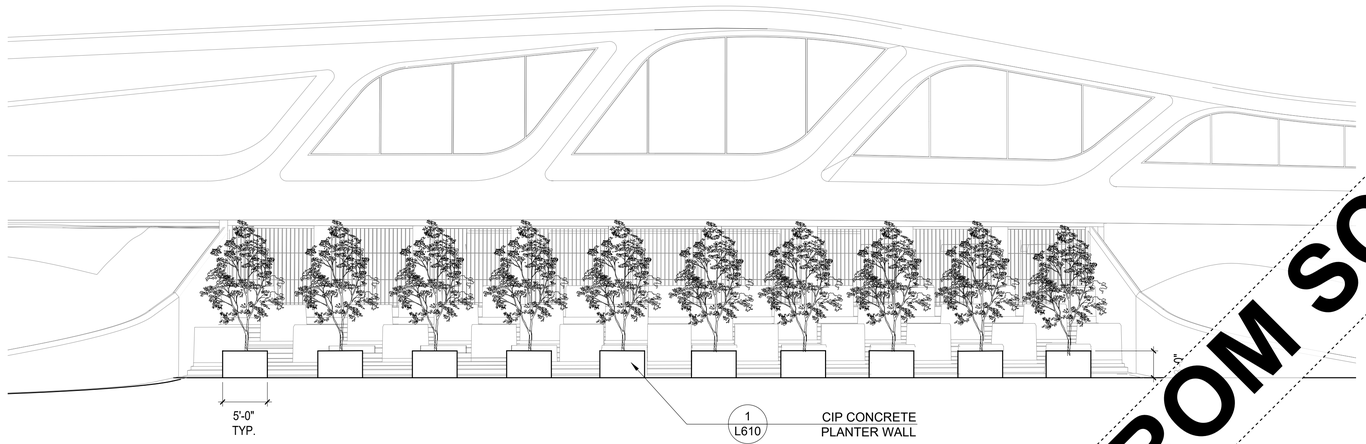

1 PLANTERS AT LEARNING CENTER ELEVATION

1/8"=1'-0"

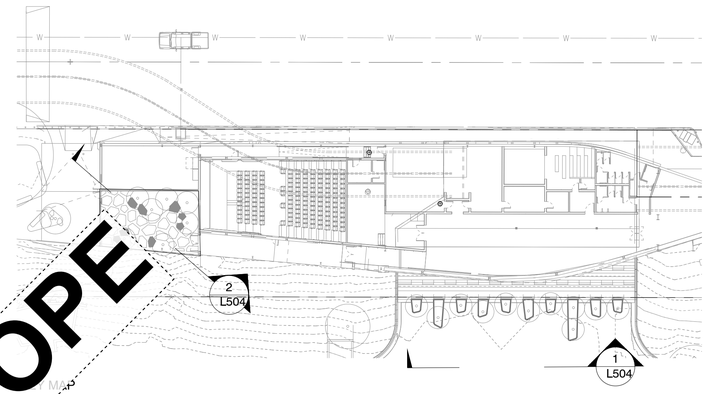

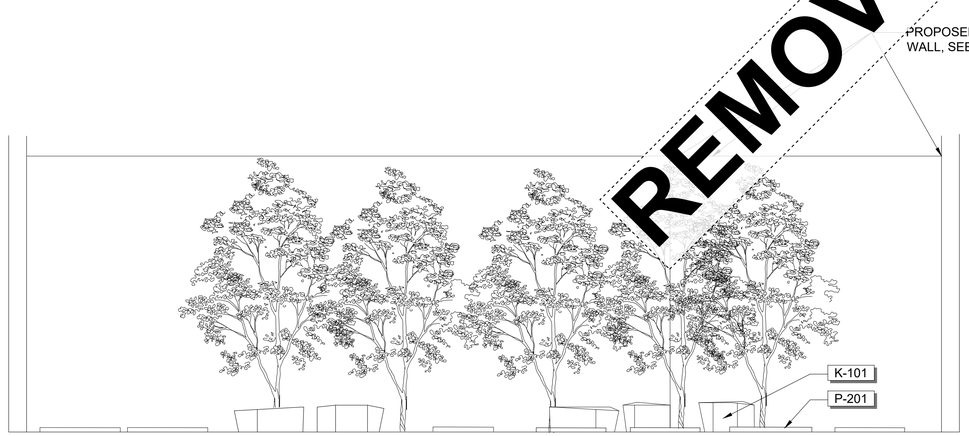

2 PLANTERS AT LEARNING CENTER ELEVATION

1/4"=1'-0"

REMOVED FROM SCOPE

NOTE: REFER TO CIVIL DRAWINGS FOR GRADING AND ELEVATIONS

NOTE: GRAPHICS SHOWN FOR DESIGN INTENT. NOT FOR CONSTRUCTION.

NOT FOR CONSTRUCTION

18.DEC.2020

ba
belzberg architects
2321 MAIN STREET
SANTA MONICA, CA 90405
310.453.9611
www.belzbergarchitects.com

STUDIO-MLA
251 South Mission Road
Los Angeles, California 90033
T. 213 384 3844 studio-mla.com

#	DESCRIPTION	DATE
	25% DD PROGRESS	1/29/21

HOLOCAUST MUSEUM LA EXPANSION

100 THE GROVE DRIVE
LOS ANGELES, CA 90036

ELEVATIONS & SECTIONS

PROJECT NUMBER: 17009

L501

12/17/2020 12:49:20 AM

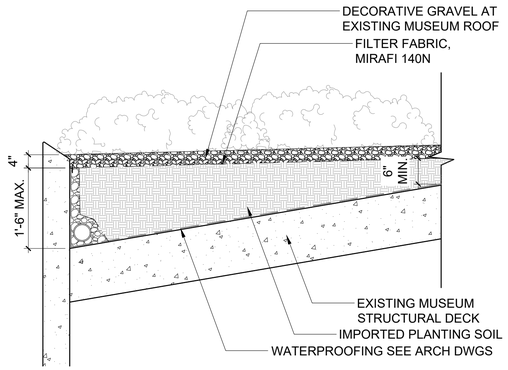

7 DECORATIVE GRAVEL AT EXISTING MUSEUM ROOF

3/4" = 1'-0" P-HML-321543-03

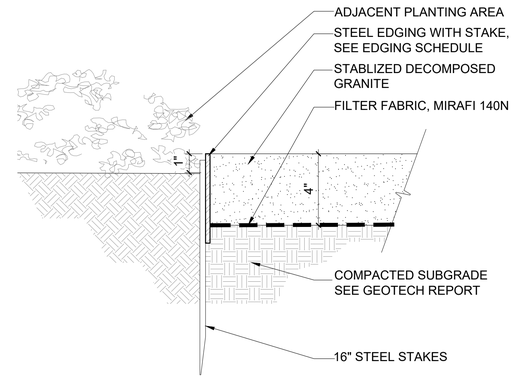

4 DECOMPOSED GRANITE WITH STEEL EDGING

3" = 1'-0" P-HML-321516-01

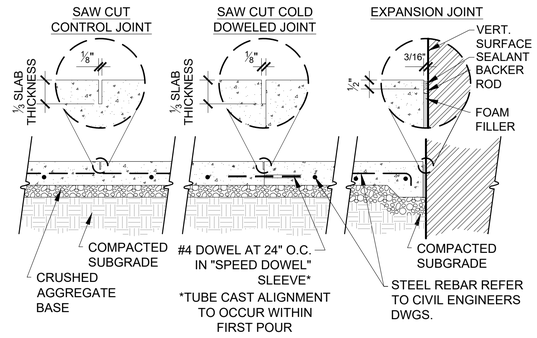

NOTES:
1. REFER TO PAVING SCHEDULE FOR ALL COLORS, TYPES, AND FINISHES.
2. REFER TO GEOTECHNICAL REPORT AND CIVIL ENGINEER'S PLANS FOR ALL FINAL REINFORCING REQUIREMENTS, THICKNESSES, AND SOIL SUBGRADE PREPARATION.
3. REFER TO PLAN FOR ALL JOINTING LOCATIONS.

1 TYPICAL CONCRETE JOINTS

1" = 1'-0" P-HML-321313-01

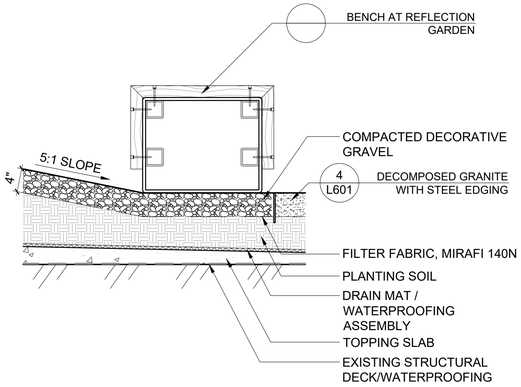

5 DECORATIVE GRAVEL AT REFLECTION GARDEN

1" = 1'-0" P-HML-321543-02

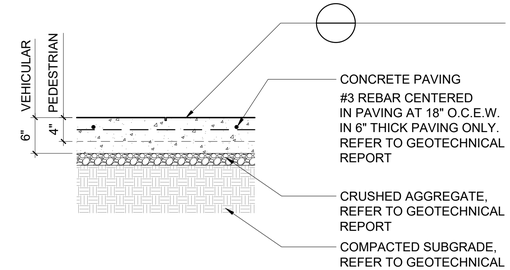

2 CONCRETE PAVING

1" = 1'-0" P-HML-321313-12

NOTE: REFER TO PLAN FOR SIZES AND LOCATIONS.

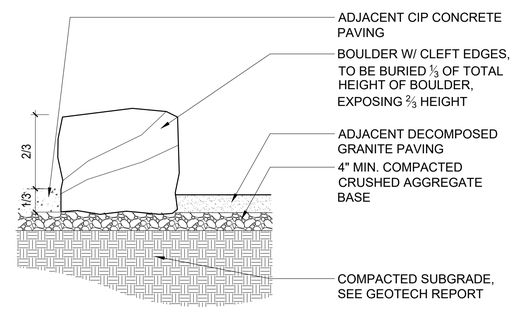

6 BOULDER PLACEMENT

1" = 1'-0" K-101, K-102, K-103 P-HML-323343-11

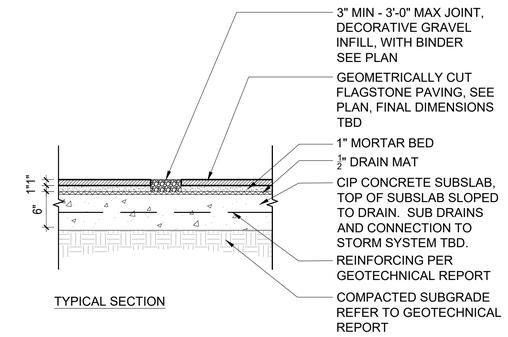

3 STONE PAVING AT EQUITY COURTYARD

1" = 1'-0" P-HML-321440-12

NOT FOR CONSTRUCTION

18.DEC.2020

ba
belzberg architects
2321 MAIN STREET
SANTA MONICA, CA 90405
310.453.9611
www.belzbergarchitects.com

STUDIO-MLA
251 South Mission Road
Los Angeles, California 90033
T. 213 384 3844 studio-mla.com

#	DESCRIPTION	DATE
25% DD PROGRESS		1/29/21

HOLOCAUST MUSEUM LA EXPANSION

100 THE GROVE DRIVE
LOS ANGELES, CA 90036

CONSTRUCTION DETAILS - PAVING AND EDGING

PROJECT NUMBER: 17009

L601

12/17/2020 12:49:20 AM

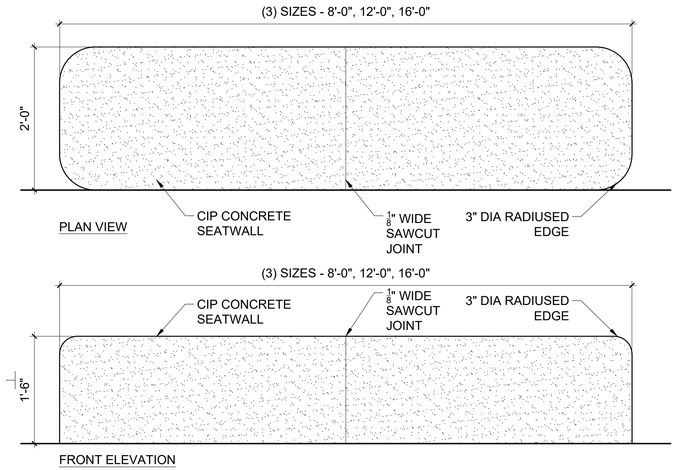

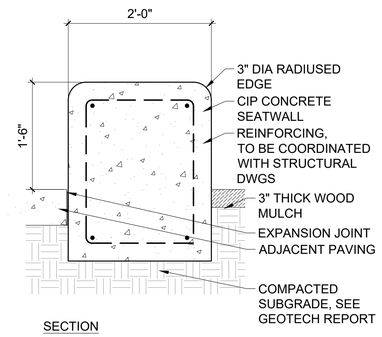

NOTES:
SKATEBOARD DETERRENT TO BE INTEGRATED INTO FORMWORK OF BENCH TO BE COORDINATED.

4 CIP CONCRETE SEATWALL AT SOUTH PLAZA

1" = 1'-0" P-HML-033373-02

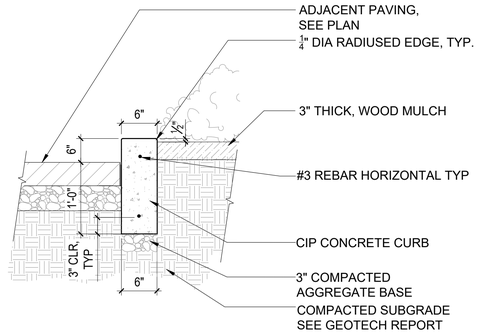

3 CIP CONCRETE PLANTER CURB AT PLAZA

1" = 1'-0" P-HML-321313-13

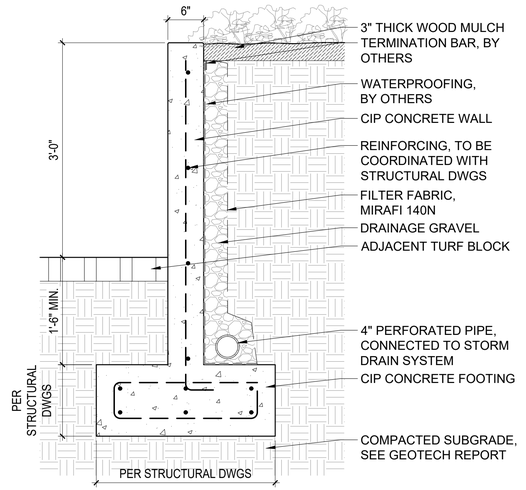

1 CIP CONCRETE PLANTER WALL

1" = 1'-0" P-HML-033376-01

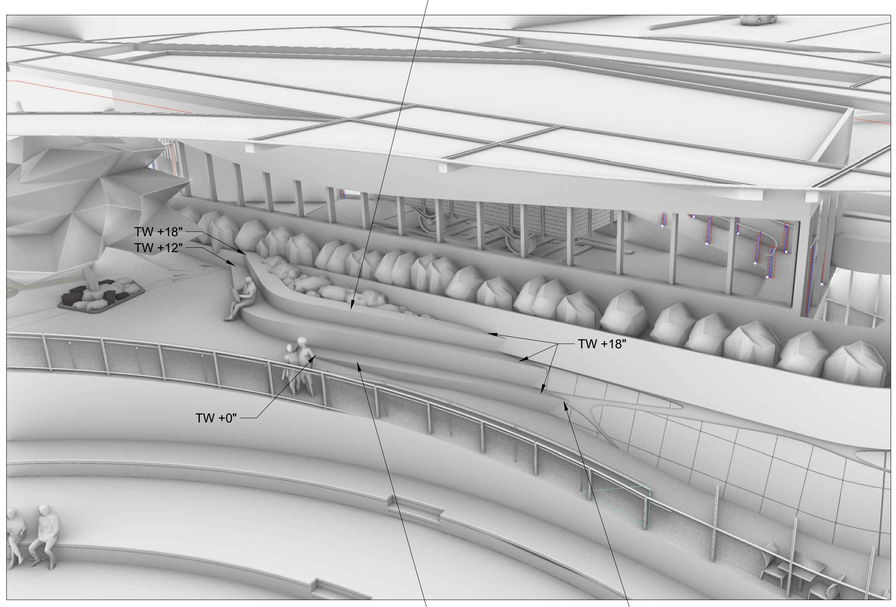

PERSPECTIVE VIEW

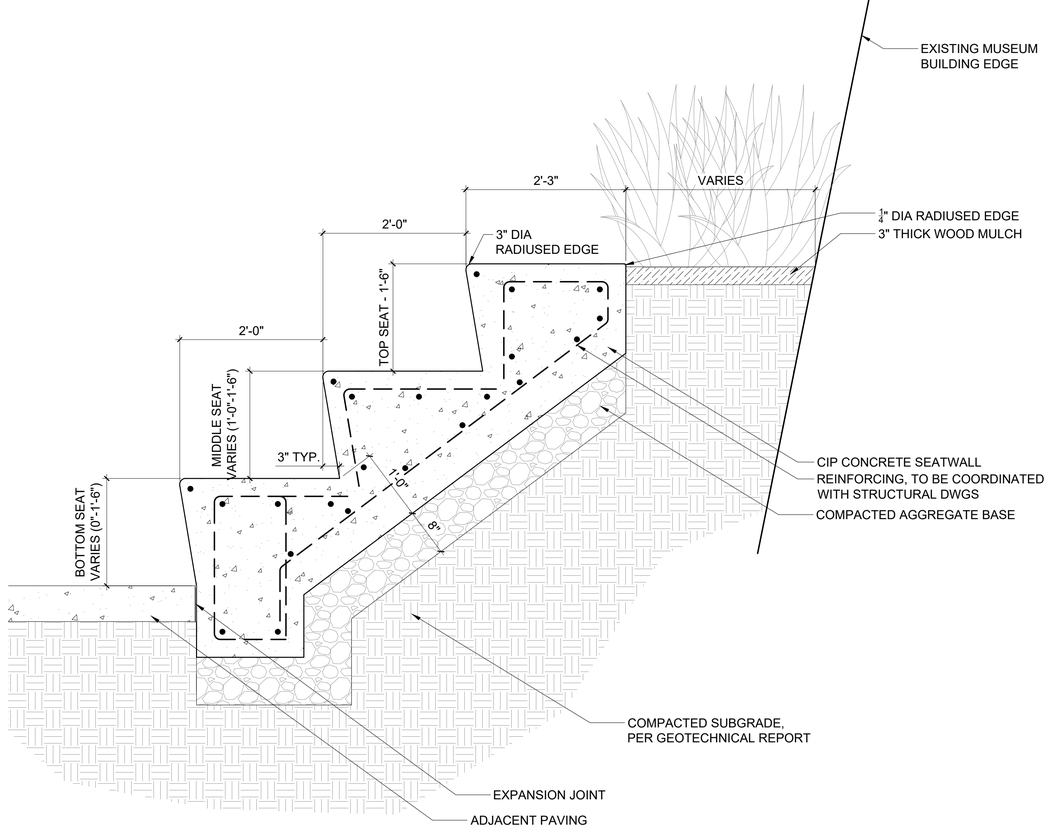

SECTION

2 CIP CONCRETE SEATWALL AT PLAZA

1" = 1'-0" P-HML-033373-01

NOT FOR CONSTRUCTION

18.DEC.2020

ba
belzberg architects
2321 MAIN STREET
SANTA MONICA, CA 90405
310.453.9611
www.belzbergarchitects.com

STUDIO-MLA
251 South Mission Road
Los Angeles, California 90033
T. 213 384 3844 studio-mla.com

#	DESCRIPTION	DATE
25% DD PROGRESS		1/29/21

HOLOCAUST MUSEUM LA EXPANSION

100 THE GROVE DRIVE
LOS ANGELES, CA 90036

CONSTRUCTION DETAILS - WALLS

PROJECT NUMBER: 17009

L610

12/17/2020 12:49:20 AM

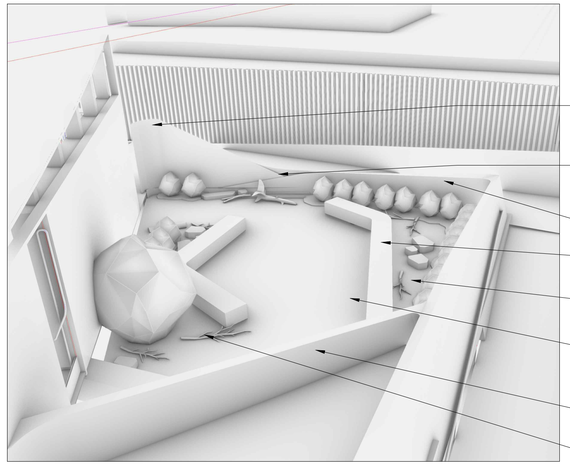

PERSPECTIVE VIEW 1

½" THICK BLACKENED STEEL PLATES, PANEL SIZE TBD, JOINT TBD

METAL WALL TO BE LOCATED DIRECTLY BEHIND EXISTING PLANTER WALL

EXISTING MUSEUM WALL

BENCH AT REFLECTION GARDEN

DECORATIVE GRAVEL AT REFLECTION GARDEN

4 / L601 DECOMPOSED GRANITE WITH STEEL EDGING

EXISTING MUSEUM WALL

A-103

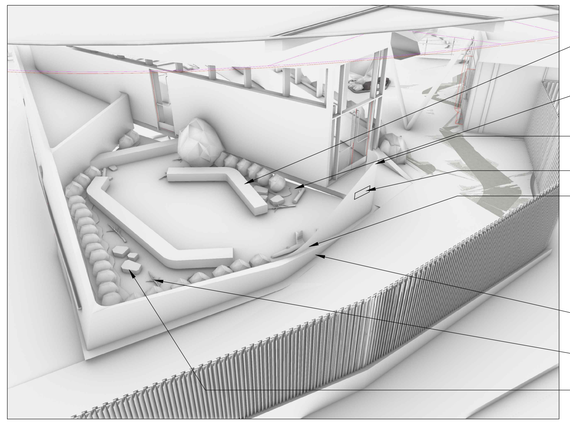

PERSPECTIVE VIEW 2

BENCH AT REFLECTION GARDEN

DECORATIVE GRAVEL AT REFLECTION GARDEN

½" THICK BLACKENED STEEL PLATES, PANEL SIZE TBD, JOINT TBD

DONOR NAME ENGRAVED INTO METAL

METAL WALL TO BE LOCATED DIRECTLY BEHIND EXISTING PLANTER WALL

EXISTING MUSEUM WALL

A-103

6 / L601 BOULDER PLACEMENT

NOTES
DETAIL SHOWN HERE IS FOR DESIGN INTENT ONLY. WATERPROOFING TO BE COORDINATED.
ALL STRUCTURAL CONNECTIONS AND SUPPORTS TO BE COORDINATED.

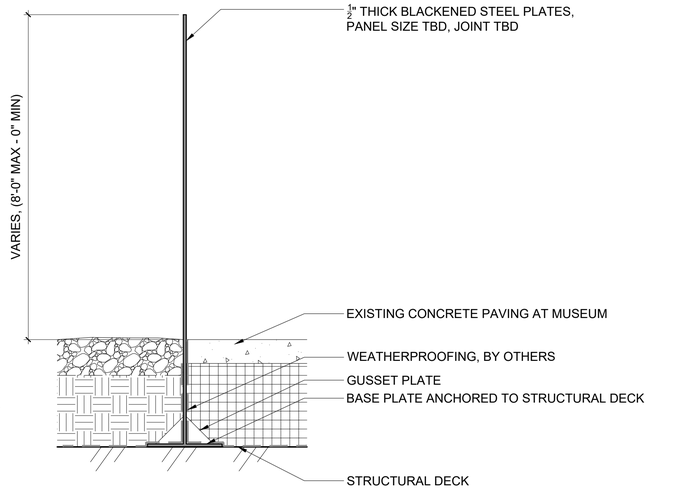

SECTION

1 METAL WALL AT REFLECTION GARDEN

1" = 1'-0"

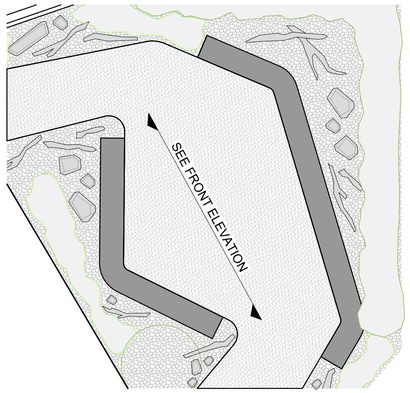

REFLECTION GARDEN ENLARGEMENT
NTS

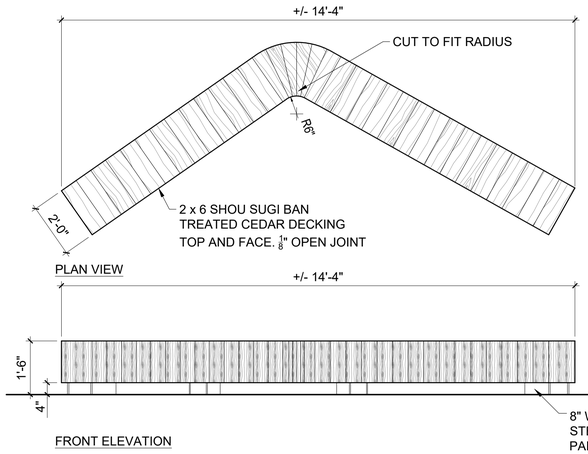

FRONT ELEVATION

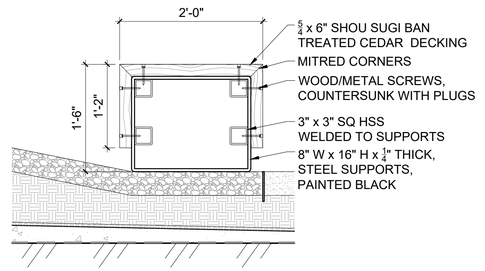

SECTION

2 BENCH AT REFLECTION GARDEN

1" = 1'-0"

P-HML-063016-02

NOT FOR CONSTRUCTION

18.DEC.2020

ba
belzberg architects
2321 MAIN STREET
SANTA MONICA, CA 90405
310.453.9611
www.belzbergarchitects.com

STUDIO-MLA
251 South Mission Road
Los Angeles, California 90033
T. 213 384 3844 studio-mla.com

#	DESCRIPTION	DATE
25% DD PROGRESS		1/29/21

HOLOCAUST MUSEUM LA EXPANSION

100 THE GROVE DRIVE
LOS ANGELES, CA 90036

CONSTRUCTION DETAILS - WALLS

PROJECT NUMBER: 17009

L611

12/17/2020 12:49:20 AM

NOTES:

1. SHOP DRAWINGS TO BE REVIEWED FOR LANDSCAPE ARCHITECT'S APPROVAL PRIOR TO FABRICATION.
2. REFER TO SCHEDULE FOR ALL COLORS, TYPES, AND FINISHES.
3. ALL STEEL TO BE PAINTED WITH HIGH PERFORMANCE PAINT- TNEMEC OR EQUAL.
4. GRIND SMOOTH ALL WELDS AND FILL WITH BONDO TO MAINTAIN CLEAN MONOLITHIC APPEARANCE. WELDS IN TUBE STEEL CORNERS TO BE FLUSH. CONTRACTOR TO INCLUDE BEVELED WELDS IN PRICING TO ASSURE THAT ALL WELDS ARE GROUND SMOOTH. ADDITIONAL WELD PATCH MAY BE NEEDED PENDING SHOP DRAWING REVIEW.
5. CONTRACTOR TO PROVIDE STRUCTURAL REVIEW IN PREPARING SHOP DRAWINGS.
6. PICKET SPACING SHOULD NOT ALLOW A 4" SPHERE TO PASS THROUGH.
7. GATE HARDWARE SPECIFICATIONS TO BE DETERMINED.

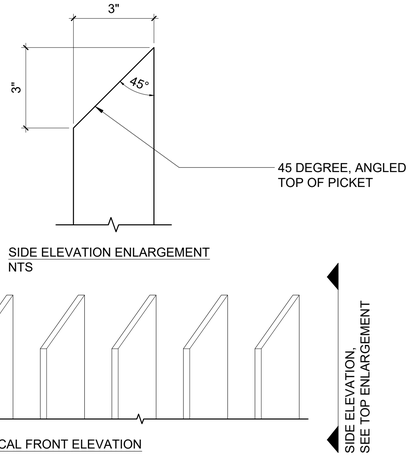

2 PICKET TOP ENLARGEMENT
3" = 1'-0" P-HML-323119-02

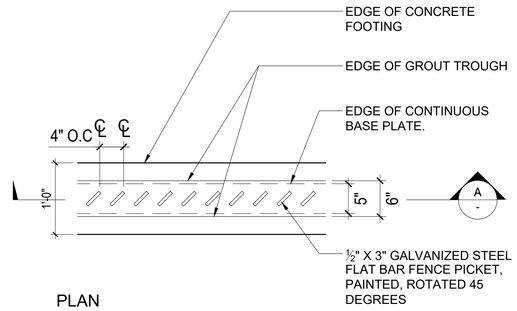

PLAN

NOTES
1. DETAIL SHOWN HERE FOR DESIGN INTENT. ALL COMPONENTS TO BE COORDINATED WITH STRUCTURAL ENGINEER.

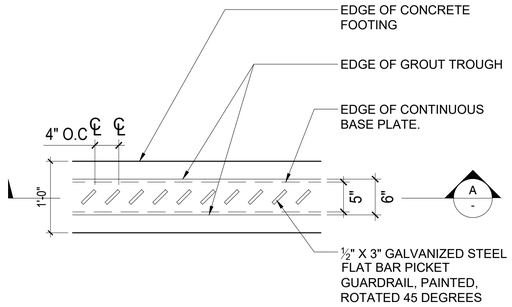

PLAN VIEW

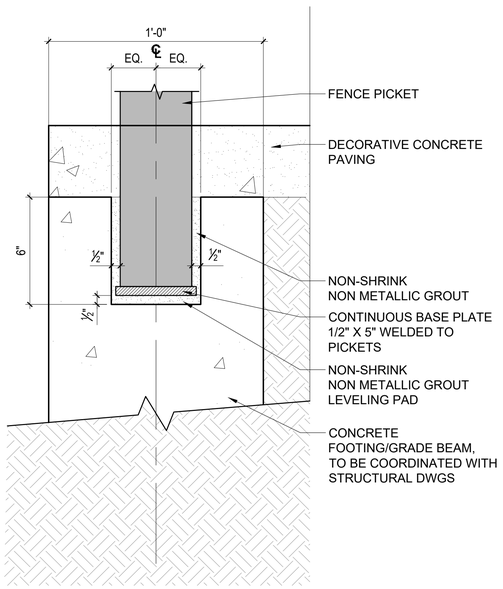

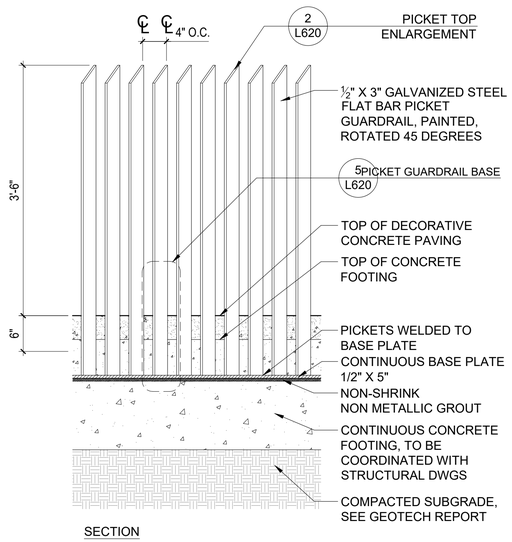

SECTION

5 PICKET GUARDRAIL BASE
3" = 1'-0" P-HML-323119-06

4 PICKET GUARDRAIL
1" = 1'-0" P-HML-323119-07

NOTES
1. DETAIL SHOWN HERE FOR DESIGN INTENT. ALL COMPONENTS TO BE COORDINATED WITH STRUCTURAL ENGINEER.

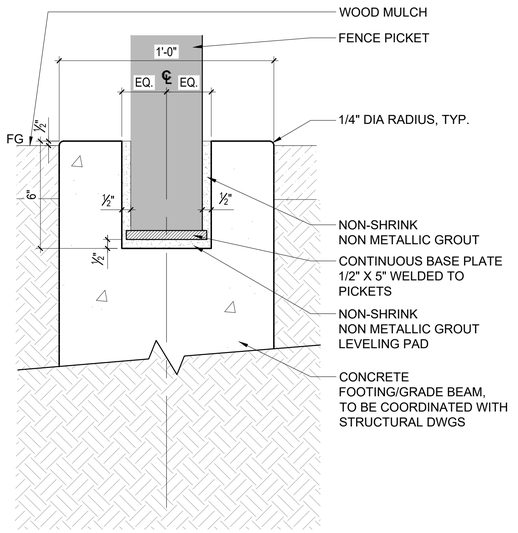

3 SECURITY PICKET FENCE BASE
3" = 1'-0" P-HML-323119-03

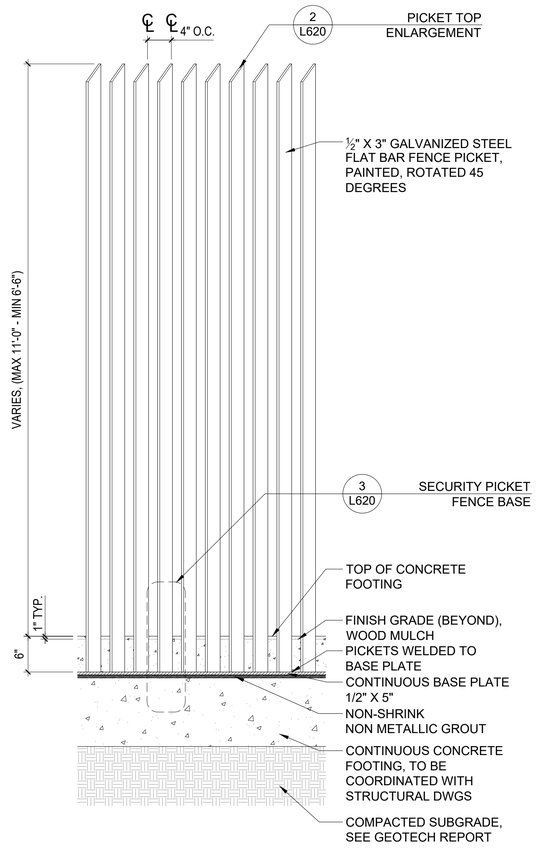

SECTION A

1 SECURITY PICKET FENCE
1" = 1'-0" F-101 P-HML-323119-01

NOT FOR CONSTRUCTION

18.DEC.2020

ba
belzberg architects
2321 MAIN STREET
SANTA MONICA, CA 90405
310.453.9611
www.belzbergarchitects.com

STUDIO-MLA
251 South Mission Road
Los Angeles, California 90033
T. 213 384 3844 studio-mla.com

#	DESCRIPTION	DATE
25% DD	PROGRESS	1/29/21

HOLOCAUST MUSEUM LA EXPANSION

100 THE GROVE DRIVE
LOS ANGELES, CA 90036

CONSTRUCTION DETAILS - FENCES, GATES, AND RAILINGS

PROJECT NUMBER: 17009

L620

12/17/2020 12:49:20 AM

NOTES:

1. SHOP DRAWINGS TO BE REVIEWED FOR LANDSCAPE ARCHITECT'S APPROVAL PRIOR TO FABRICATION.
2. REFER TO SCHEDULE FOR ALL COLORS, TYPES, AND FINISHES.
3. ALL STEEL TO BE PAINTED WITH HIGH PERFORMANCE PAINT- TNEMEC OR EQUAL.
4. GRIND SMOOTH ALL WELDS AND FILL WITH BONDO TO MAINTAIN CLEAN MONOLITHIC APPEARANCE. WELDS IN TUBE STEEL CORNERS TO BE FLUSH. CONTRACTOR TO INCLUDE BEVELED WELDS IN PRICING TO ASSURE THAT ALL WELDS ARE GROUND SMOOTH. ADDITIONAL WELD PATCH MAY BE NEEDED PENDING SHOP DRAWING REVIEW.
5. CONTRACTOR TO PROVIDE STRUCTURAL REVIEW IN PREPARING SHOP DRAWINGS.
6. PICKET SPACING SHOULD NOT ALLOW A 4" SPHERE TO PASS THROUGH.
7. GATE HARDWARE SPECIFICATIONS TO BE DETERMINED.

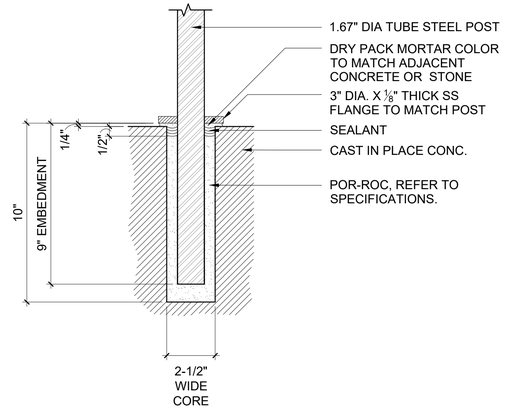

3 HANDRAIL POST EMBEDMENT

3" = 1'-0"

P-HML-055213-02

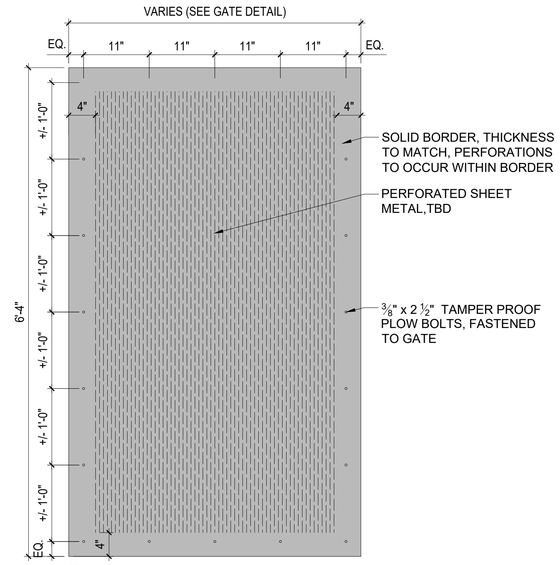

2 PERFORATED SHEET METAL PANELS

1" = 1'-0"

P-HML-323119-05

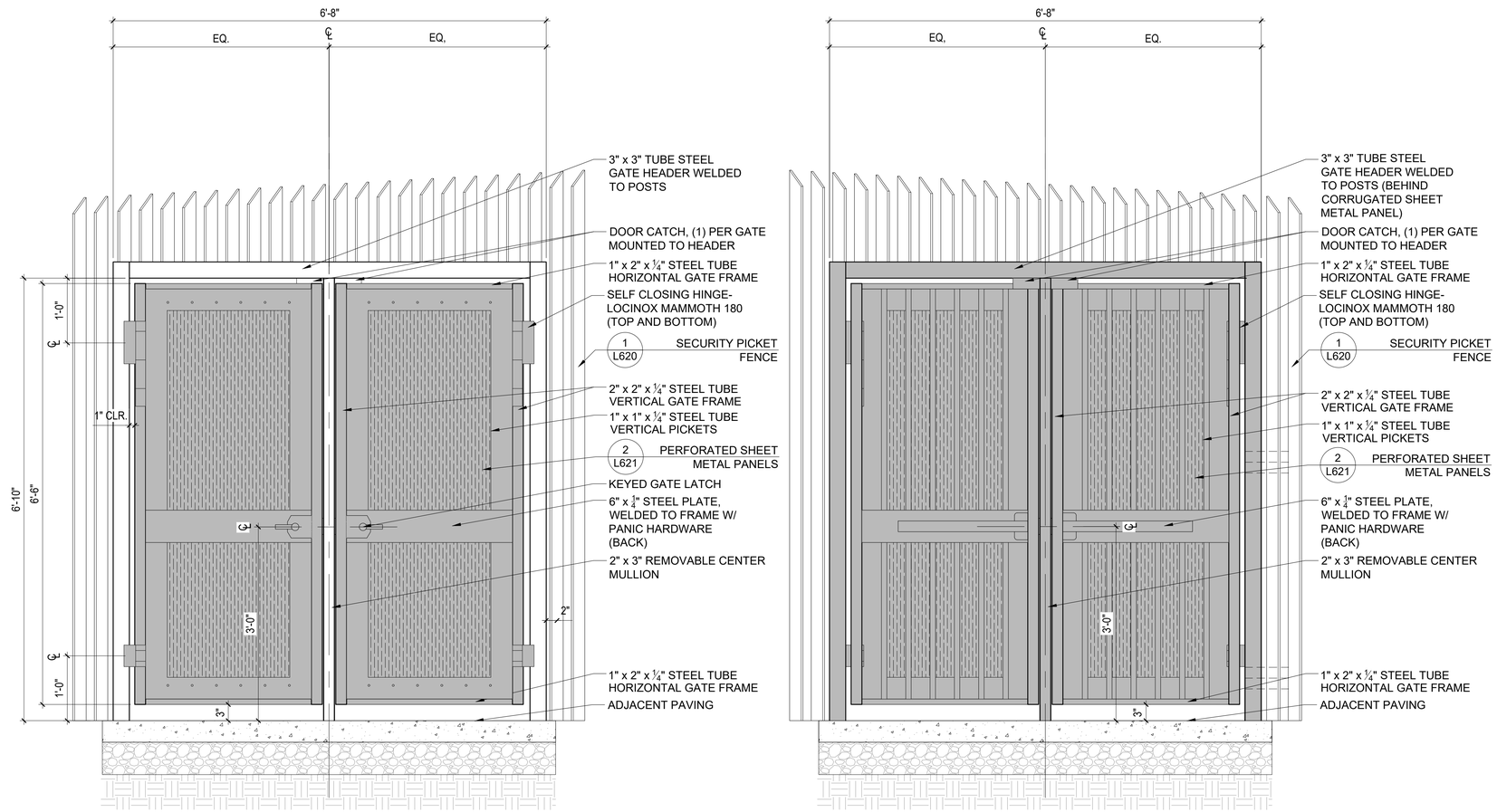

1 GATE AT SECURITY PICKET FENCE

1" = 1'-0" G-101

P-HML-323119-04

NOT FOR CONSTRUCTION

18.DEC.2020

ba
belzberg architects
2321 MAIN STREET
SANTA MONICA, CA 90405
310.453.9611
www.belzbergarchitects.com

STUDIO-MLA
251 South Mission Road
Los Angeles, California 90033
T. 213 384 3844 studio-mla.com

#	DESCRIPTION	DATE
25% DD PROGRESS		1/29/21

HOLOCAUST MUSEUM LA EXPANSION

100 THE GROVE DRIVE
LOS ANGELES, CA 90036

CONSTRUCTION DETAILS - FENCES, GATES, AND RAILINGS

PROJECT NUMBER: 17009

L621

12/17/2020 12:49:20 AM

PRECEDENT IMAGE

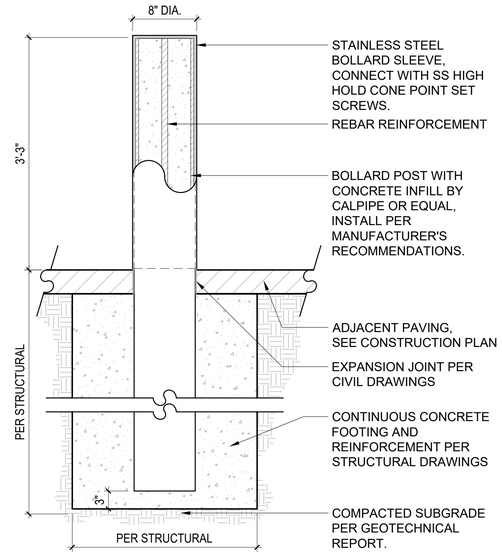

SECTION

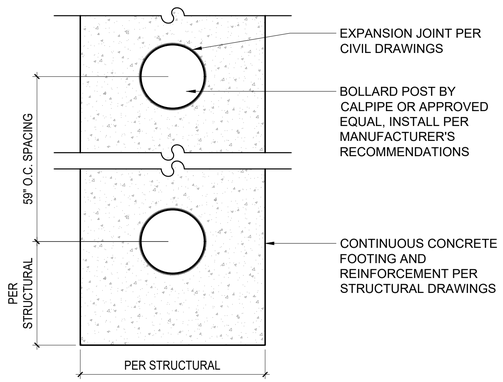

PLAN

1 SECURITY BOLLARD

1" = 1'-0"

P-HML-323913-08

NOT FOR CONSTRUCTION

18.DEC.2020

ba
belzberg architects

2321 MAIN STREET
SANTA MONICA, CA 90405
310.453.9611

www.belzbergarchitects.com

STUDIO-MLA

251 South Mission Road
Los Angeles, California 90033
T. 213 384 3844 studio-mla.com

#	DESCRIPTION	DATE
25% DD PROGRESS		1/29/21

HOLOCAUST MUSEUM LA EXPANSION

100 THE GROVE DRIVE
LOS ANGELES, CA 90036

CONSTRUCTION DETAILS - AMENITIES

PROJECT NUMBER: 17009

L630

12/17/2020 12:45:20 AM

CONCEPT PLANT SCHEDULE

	ROOFTOP PLANTING AREA	4,890 SF		
	ACHILLEA MILLEFOLIUM 'PAPRIKA' / PAPRIKA COMMON YARROW	1,017	1 GAL	20% @ 12" oc
	BACCHARIS PILULARIS 'PIGEON POINT' / PIGEON POINT COYOTE BRUSH	113	5 GAL	20% @ 36" oc
	GALVEZIA SPECIOSA 'FIRECRACKER' / FIRECRACKER ISLAND SNAPDRAGON	113	5 GAL	20% @ 36" oc
	RHAMNUS CALIFORNICA 'MOUND SAN BRUNO' / CALIFORNIA COFFEEBERRY	113	5 GAL	20% @ 36" oc
	SANTOLINA CHAMAECYPARISSUS / LAVENDER COTTON	113	5 GAL	20% @ 36" oc
	PLANTING AREA AT PROPOSED LEARNING CENTER	6,156 SF		
	DIANELLA REVOLUTA 'DR5000' TM / LITTLE REV FLAX LILY	1,422	5 GAL	50% @ 18" oc
	SENECIO FICOIDES 'MOUNT EVEREST' TM / SKYSCRAPER SENECIO	1,422	SIZE	50% @ 18" oc
	EQUITY COURTYARD PLANTING	367 SF		
	OLEA EUROPAEA 'MONTRA' TM / LITTLE OLLIE OLIVE	15	15 GAL	33% @ 36" oc
	PHLOMIS FRUTICOSA 'COMPACT FORM' / JERUSALEM SAGE	15	5 GAL	33% @ 36" oc
	THYMUS LANUGINOSUS / WOOLLY THYME	128	1 GAL	33% @ 12" oc
	PLANTING AREA AT EXISTING SPILLWAY	288 SF		
	MYRTUS COMMUNIS 'COMPACTA' / DWARF MYRTLE	38	SIZE	50% @ 24" oc
	ROSMARINUS OFFICINALIS 'HUNTINGTON CARPET' / HUNTINGTON CARPET ROSEMARY	38	SIZE	50% @ 24" oc
	PLANTING AREA AT AMPHITHEATER	394 SF		
	CARISSA MACROCARPA 'TUTTLEI' / TUTTLE NATAL PLUM	66	5 GAL	30" oc
	PLANTING AREA AT PLAZA	598 SF		
	CORREA X 'DUSKY BELLS' / DUSKY BELLS AUSTALIAN FUCHSIA	78	5 GAL	50% @ 24" oc
	DIANELLA REVOLUTA 'DR5000' TM / LITTLE REV FLAX LILY	78	5 GAL	50% @ 24" oc
	PLANTING AREA AT MARTYR`S MEMORIAL	4,987 SF		
	CORREA X 'DUSKY BELLS' / DUSKY BELLS AUSTALIAN FUCHSIA	144	5 GAL	25% @ 36" oc
	DIANELLA REVOLUTA 'DR5000' TM / LITTLE REV FLAX LILY	144	5 GAL	25% @ 36" oc
	OLEA EUROPAEA 'MONTRA' TM / LITTLE OLLIE OLIVE	144	15 GAL	25% @ 36" oc
	PHLOMIS FRUTICOSA 'COMPACT FORM' / JERUSALEM SAGE	144	5 GAL	25% @ 36" oc

NOTE: ALL PLANTING AREAS TO BE IRRIGATED WITH DRIP IRRIGATION TO BE DEVELOPED IN FUTURE PHASES.

PLANTING QUANTITIES ARE SHOWN FOR COORDINATION PURPOSES. CONTRACTOR TO ENSURE ALL QUANTITIES MATCH PLANS.

PLANT SCHEDULE

TREES	CODE	BOTANICAL / COMMON NAME	CONT		QTY	DETAIL
	BRA PP2	BRACHYCHITON POPULNEUS / KURRAJONG	48" BOX		7	
	OLE MUL	OLEA EUROPAEA / OLIVE MULTI-TRUNK 96" FIELD DUG OLD WORLD OLIVE	96" BOX		1	
	QUE AGR	QUERCUS AGRIFOLIA / COAST LIVE OAK	60" BOX		1	
	TRI EL2	TRISTANIA LAURINA 'ELEGANT' / ELEGANT WATER GUM	48" BOX		10	

PLANTING NOTES

1. DRAWING IS DIAGRAMMATIC. VERIFY ALL LOCATIONS AND CONDITIONS ON SITE. COUNT ALL PLANT MATERIAL BEFORE BIDDING.
2. INSPECT ALL EXISTING CONDITIONS ON SITE AND LOCATE ALL EXISTING UTILITIES BEFORE CONSTRUCTION BEGINS. ALL TREE STAKING LOCATIONS TO BE APPROVED BY LANDSCAPE ARCHITECT PRIOR TO ANY DIGGING.
3. CONTRACTOR TO REPAIR AT THEIR OWN EXPENSE ALL PROPERTY DAMAGE WHICH OCCURS DURING PROJECT INSTALLATION.
4. NOTE ADDITIONAL REMARKS ON SPECIFIC PLANTS IN PLANT LIST.
5. ALL EXISTING PLANT MATERIAL TO BE REMOVED EXCEPT WHERE NOTED ON PLAN.
6. ALL PLANT MATERIAL TO BE GUARANTEED FOR 90 DAYS FROM THE DATE OF ACCEPTANCE BY OWNER. CONTRACTOR SHALL STORE PLANT MATERIAL IN SHADE AND PROTECT FROM SUN. ENSURE ON SITE WATERING PRIOR TO PLANTING.
7. FINISH GRADE TO BE 1" BELOW ALL WALKS, CURBS, AND PAVING.
8. ALL PLANTED AREAS SHALL RECEIVE THE FOLLOWING AMENDMENTS PER 1,000 SQ. FT. OF SURFACE AREA. ROTO-TILL AMENDMENTS TO A DEPTH OF 6"
   *150 LBS. GRO-POWER
   *ADD 8 LBS OF GRO-P0WER CONTROLLED RELEASE 12-8-8 PER CU YD OF MIX.
9. PLANT HOLE TO BE TWICE AS WIDE AS THE PLANT ROOT BALL. BACKFILL AND COMPACT TO 80% WITH 60% SOIL OF SITE AND 40% FIR BARK, UNLESS OTHERWISE NOTED. PROVIDE GRO-POWER PLANT TABLETS AT THE FOLLOWING RATES:
   1 GAL 2
   5 GAL 5
   15 GAL 10
   24" BOX AND UP 14
   PLACE RECOMMENDED TABLETS BETWEEN THE BOTTOM AND THE TOP OF THE ROOT BALL BUT NO HIGHER THAN 1/3 OF THE WAY UP TO THE TOP OF THE ROOT BALL. SPACE TABLETS EQUALLY AROUND THE PERIMETER OF THE ROOT BALL APPROXIMATELY 2" FROM THE ROOT TIPS.
10. "DEEP ROOT" BARRIERS ARE TO BE USED AROUND ALL TREES LOCATED WITHIN 5 FT. OF PAVING. INSTALL PER MANUFACTURER'S SPECIFICATIONS. CONTRACTOR SHALL REMOVE ALL NURSERY STAKES AFTER PLANTING.
11. ALL PROPOSED SHRUB AND GROUND COVER AREAS ARE TO BE TREATED WITH A PRE-EMERGENT WEED KILLER (EPTAM / RONSTAR). APPLY PER MANUFACTURER'S SPECIFICATIONS:
    A) IMMEDIATELY AFTER PLANTING,
    B) AT THE BEGINNING OF THE MAINTENANCE PERIOD, AND
    C) AT THE END OF THE MAINTENANCE PERIOD.
12. ALL PLANTING AREAS TO BE TOP DRESSED WITH MULCH PER SPECIFICATIONS.
13. INSTALL AND MAINTAIN LANDSCAPE PLANTING IN ACCORDANCE WITH THE GOVERNING AGENCY'S GUIDELINES AND SPECIFICATIONS UNLESS NOTED OTHERWISE IN THESE NOTES OR ON THE PLANS.

NOT FOR CONSTRUCTION

18.DEC.2020

ba
belzberg architects
2321 MAIN STREET
SANTA MONICA, CA 90405
310.453.9611
www.belzbergarchitects.com

STUDIO-MLA
251 South Mission Road
Los Angeles, California 90033
T. 213 384 3844 studio-mla.com

#	DESCRIPTION	DATE
25%	DD PROGRESS	1/29/21

HOLOCAUST MUSEUM LA EXPANSION

100 THE GROVE DRIVE
LOS ANGELES, CA 90036

PLANTING LEGENDS AND NOTES

PROJECT NUMBER: 17009

L800A

12/17/2020 12:48:20 AM

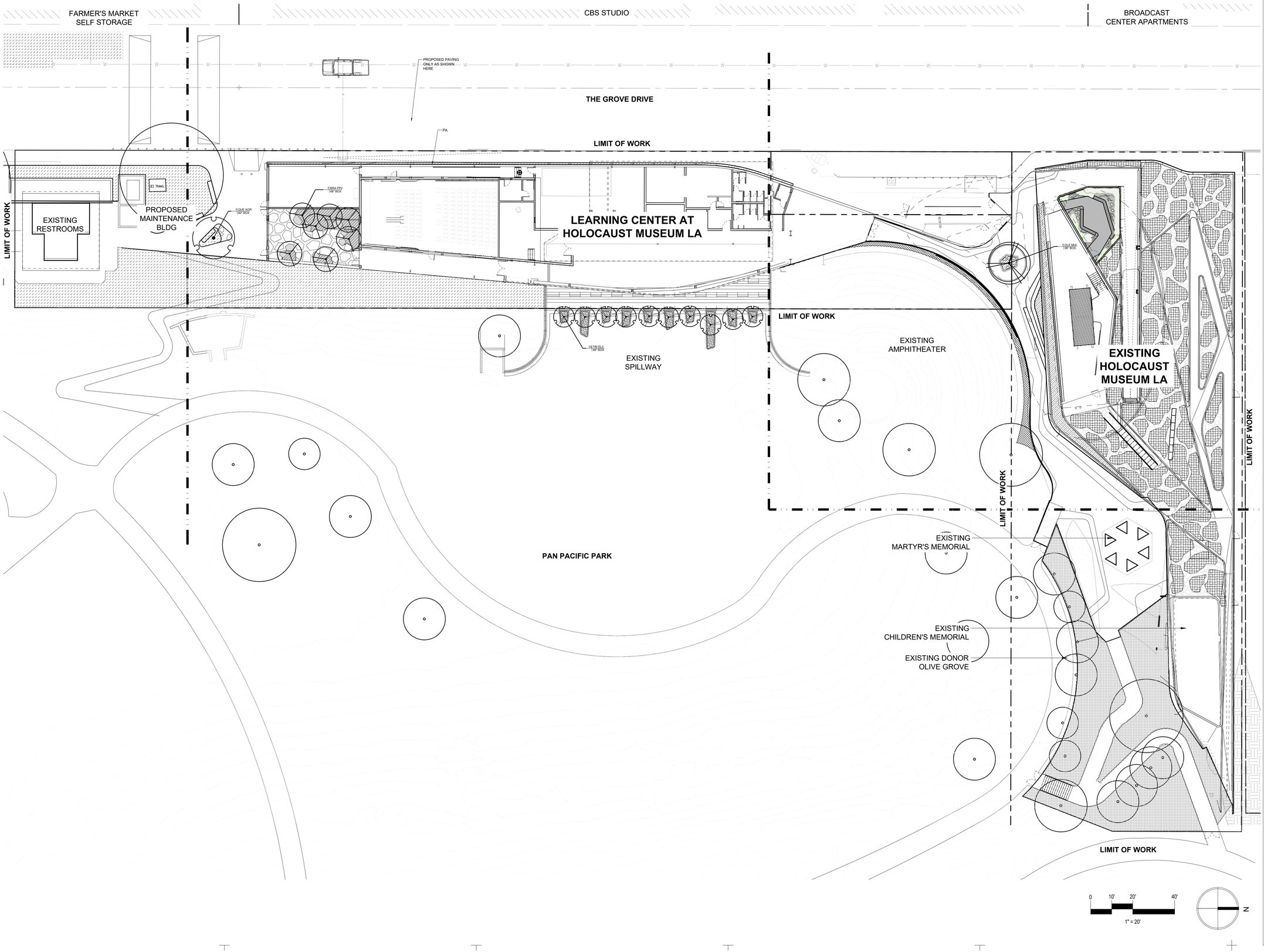

NOT FOR CONSTRUCTION

18.DEC.2020

ba
belzberg architects
2321 MAIN STREET
SANTA MONICA, CA 90405
310.453.9611
www.belzbergarchitects.com

STUDIO-MLA
251 South Mission Road
Los Angeles, California 90033
T. 213 384 3844 studio-mla.com

#	DESCRIPTION	DATE
25% DD PROGRESS		1/29/21

HOLOCAUST
MUSEUM LA
EXPANSION

100 THE GROVE DRIVE
LOS ANGELES, CA 90036

OVERALL
PLANTING PLAN

PROJECT NUMBER: 17009

L800B

12/17/2020 12:49:20 AM

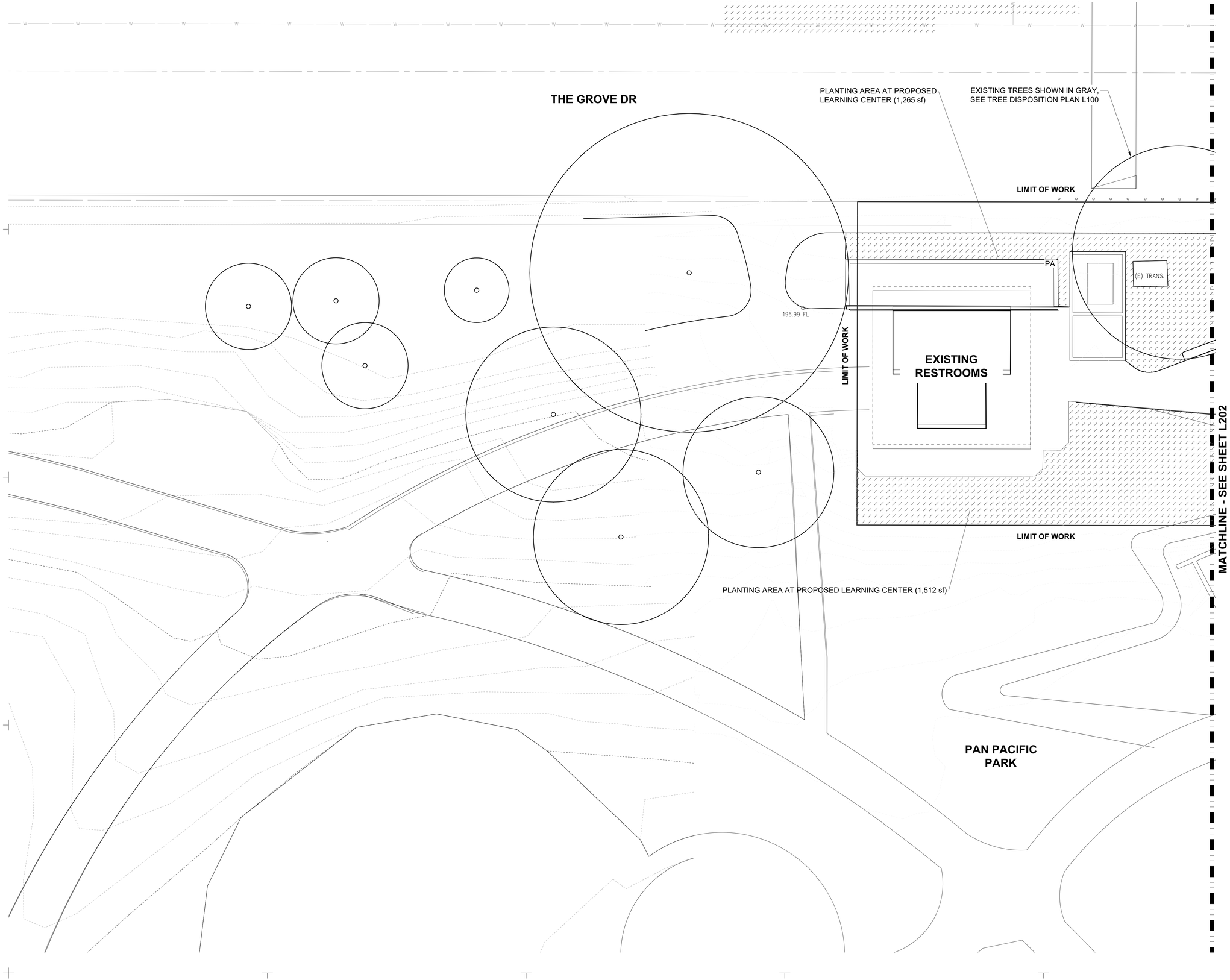

NOT FOR CONSTRUCTION

18.DEC.2020

ba
belzberg architects
2321 MAIN STREET
SANTA MONICA, CA 90405
310.453.9611
www.belzbergarchitects.com

STUDIO-MLA
251 South Mission Road
Los Angeles, California 90033
T. 213 384 3844 studio-mla.com

#	DESCRIPTION	DATE
25%	DD PROGRESS	1/29/21

HOLOCAUST MUSEUM LA EXPANSION

100 THE GROVE DRIVE
LOS ANGELES, CA 90036

KEY PLAN

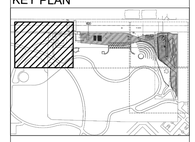

PLANTING PLAN

PROJECT NUMBER: 17009

L801

12/17/2020 12:48:20 AM

WOONERF, FOR FURTHER DEVELOPMENT

PROPOSED PAVING ONLY AS SHOWN HERE

THE GROVE DRIVE

PLANTING AREA AT PROPOSED LEARNING CENTER (266 sf)

PA

LIMIT OF WORK

PA

MECHANICAL YARD

7| BRA PP2
48" BOX

1| QUE AGR
60" BOX

LEARNING CENTER AT HOLOCAUST MUSEUM LA

MATCHLINE - SEE SHEET L201

MATCHLINE - SEE SHEET L203

LIMIT OF WORK

REMOVED FROM SCOPE

EQUITY COURTYARD PLANTING (367 sf)

OSED LEARNING CENTER (3,113 sf)

REMOVED FROM SCOPE

10| TRI EL2
48" BOX

EXISTING SITE TO REMAIN

EXISTING TREES SHOWN IN GRAY, SEE TREE DISPOSITION PLAN L100

EXISTING SPILLWAY

PAN PACIFIC PARK

N

0 15' 30' 60'

1" = 30'

NOT FOR CONSTRUCTION

18.DEC.2020

belzberg architects

2321 MAIN STREET
SANTA MONICA, CA 90405
310.453.9611

www.belzbergarchitects.com

STUDIO-MLA

251 South Mission Road
Los Angeles, California 90033
T. 213 384 3844 studio-mla.com

#	DESCRIPTION	DATE
25% DD PROGRESS		1/29/21

HOLOCAUST MUSEUM LA EXPANSION

100 THE GROVE DRIVE
LOS ANGELES, CA 90036

KEY PLAN

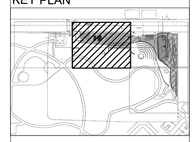

PLANTING PLAN

PROJECT NUMBER: 17009

L802

12/17/2020 12:49:20 AM

CROSSWALK

THE GROVE DR

BUS LOADING/UNLOADING ZONE

LIMIT OF WORK

P-303

SECURITY

GIFT SHOP

REFLECTION GARDEN UNDER DEVELOPMENT

2 L401

1 OLE MUL 96" BOX

PA

ROOFTOP PLANTING AREA (4,315 sf)

P-303

RAMP INTO LEARNING CENTER

PROPOSED CANOPY, SEE ARCH DWGS

PROPOSED CANOPY OPENING, SEE ARCH DWGS

PLANTNG AREA AT PLAZA (41 sf)

LIMIT OF WORK

BOXCAR PAVILION

US POST OFFICE

PLANTING AREA AT PLAZA (505 sf)

PLANTING AREA AT PLAZA (52 sf)

PA

LIMIT OF WORK

MATCHLINE - SEE SHEET L202

EXISTING SITE TO REMAIN

EXISTING AMPHITHEATER

PLANTING AREA AT AMPHITHEATER (394 sf)

LIMIT OF WORK

P-303

EXISTING TREES SHOWN IN GRAY, SEE TREE DISPOSITION PLAN L100

EXISTING PLANTING AREA TO REMAIN

MATCHLINE - SEE SHEET L204

N

0 5' 10' 20'

1" = 10'

NOT FOR CONSTRUCTION

18.DEC.2020

ba
belzberg architects

2321 MAIN STREET
SANTA MONICA, CA 90405
310.453.9611

www.belzbergarchitects.com

STUDIO-MLA

251 South Mission Road
Los Angeles, California 90033
T. 213 384 3844 studio-mla.com

#	DESCRIPTION	DATE
25% DD PROGRESS		1/29/21

HOLOCAUST MUSEUM LA EXPANSION

100 THE GROVE DRIVE
LOS ANGELES, CA 90036

KEY PLAN

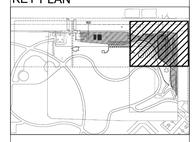

PLANTING PLAN

PROJECT NUMBER: 17009

L803

12/17/2020 12:49:20 AM

MATCHLINE - SEE SHEET L203

MARTYR'S MEMORIAL

PA

PA

ROOFTOP PLANTING AREA (575 sf)

P-303

EXISTING PLANTING AREA TO REMAIN

LIMIT OF WORK

US POST OFFICE

LIMIT OF WORK

CHILDREN'S MEMORIAL

PROPOSED ARCHITECTURAL CANOPY, SEE ARCH DWGS

PAN PACIFIC PARK

EXISTING TREES SHOWN IN GRAY, SEE TREE DISPOSITION PLAN L100

PLANTING AREA AT MARTYR`S MEMORIAL (1,726 sf)

PLANTING AREA AT MARTYR`S MEMORIAL (1,232 sf)

LIMIT OF WORK

PLANTING AREA AT MARTYR`S MEMORIAL (1,532 sf)

N

0 15' 30' 60'

1" = 30'

NOT FOR CONSTRUCTION

18.DEC.2020

ba
belzberg architects
2321 MAIN STREET
SANTA MONICA, CA 90405
310.453.9611
www.belzbergarchitects.com

STUDIO-MLA
251 South Mission Road
Los Angeles, California 90033
T. 213 384 3844 studio-mla.com

#	DESCRIPTION	DATE
	25% DD PROGRESS	1/29/21

HOLOCAUST MUSEUM LA EXPANSION

100 THE GROVE DRIVE
LOS ANGELES, CA 90036

KEY PLAN

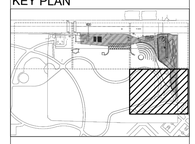

PLANTING PLAN

PROJECT NUMBER: 17009

L804

12/17/2020 12:45:20 AM

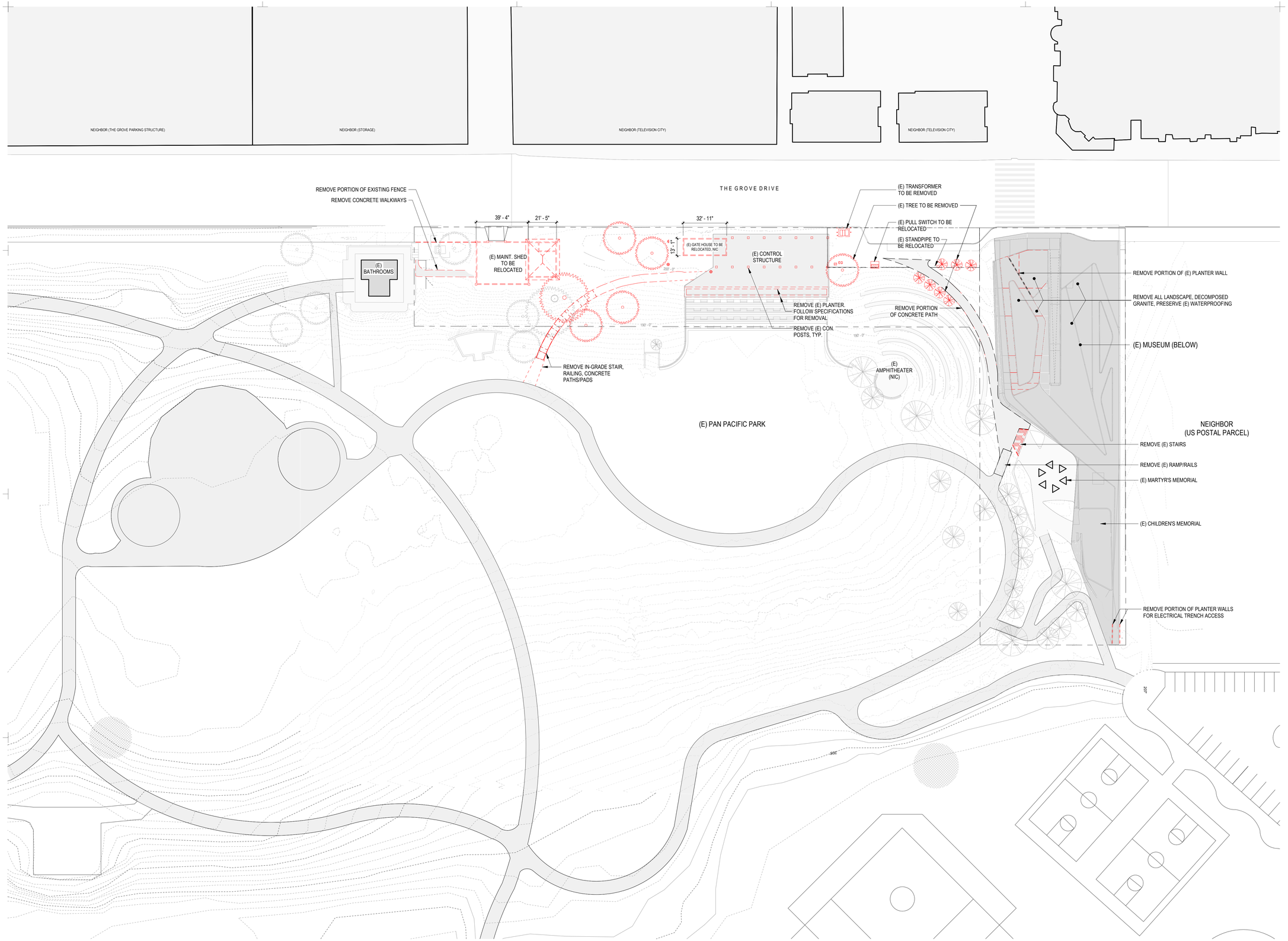

SITE PLAN (DEMO) 1
SCALE: 1/32" = 1'-0"
NORTH

NOT FOR CONSTRUCTION

17.NOV.2021

ba
belzberg architects
2740 MAIN STREET
SANTA MONICA, CA 90405
310.453.9611
www.belzbergarchitects.com

#	DESCRIPTION	DATE

HOLOCAUST MUSEUM LA EXPANSION

100 THE GROVE DRIVE
LOS ANGELES, CA 90036

DEMO PLAN

PROJECT NUMBER: 17009

A100

11/18/2021 11:48:19 AM

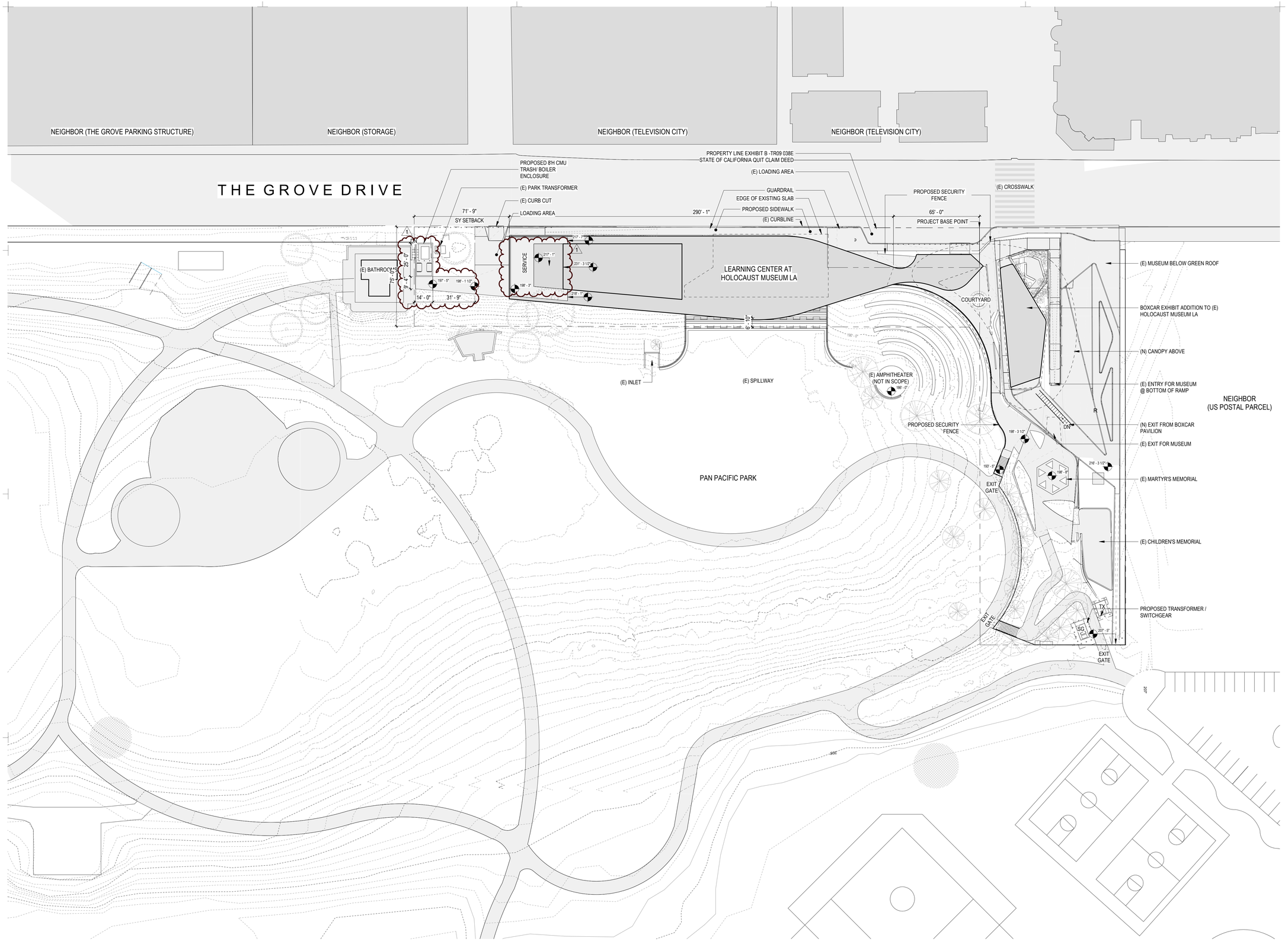

SITE PLAN 1
SCALE: 1/32" = 1'-0"
NORTH

NOT FOR CONSTRUCTION

17.NOV.2021
100% DESIGN SUBMITTAL

belzberg architects
2740 MAIN STREET
SANTA MONICA, CA 90405
310.453.9611

www.belzbergarchitects.com

#	DESCRIPTION	DATE
1	P.C. VERIF 1	12/10/2021

HOLOCAUST MUSEUM LA EXPANSION

100 THE GROVE DRIVE
LOS ANGELES, CA 90036

SITE PLAN

PROJECT NUMBER: 17009

A110

11/18/2021 11:49:46 AM

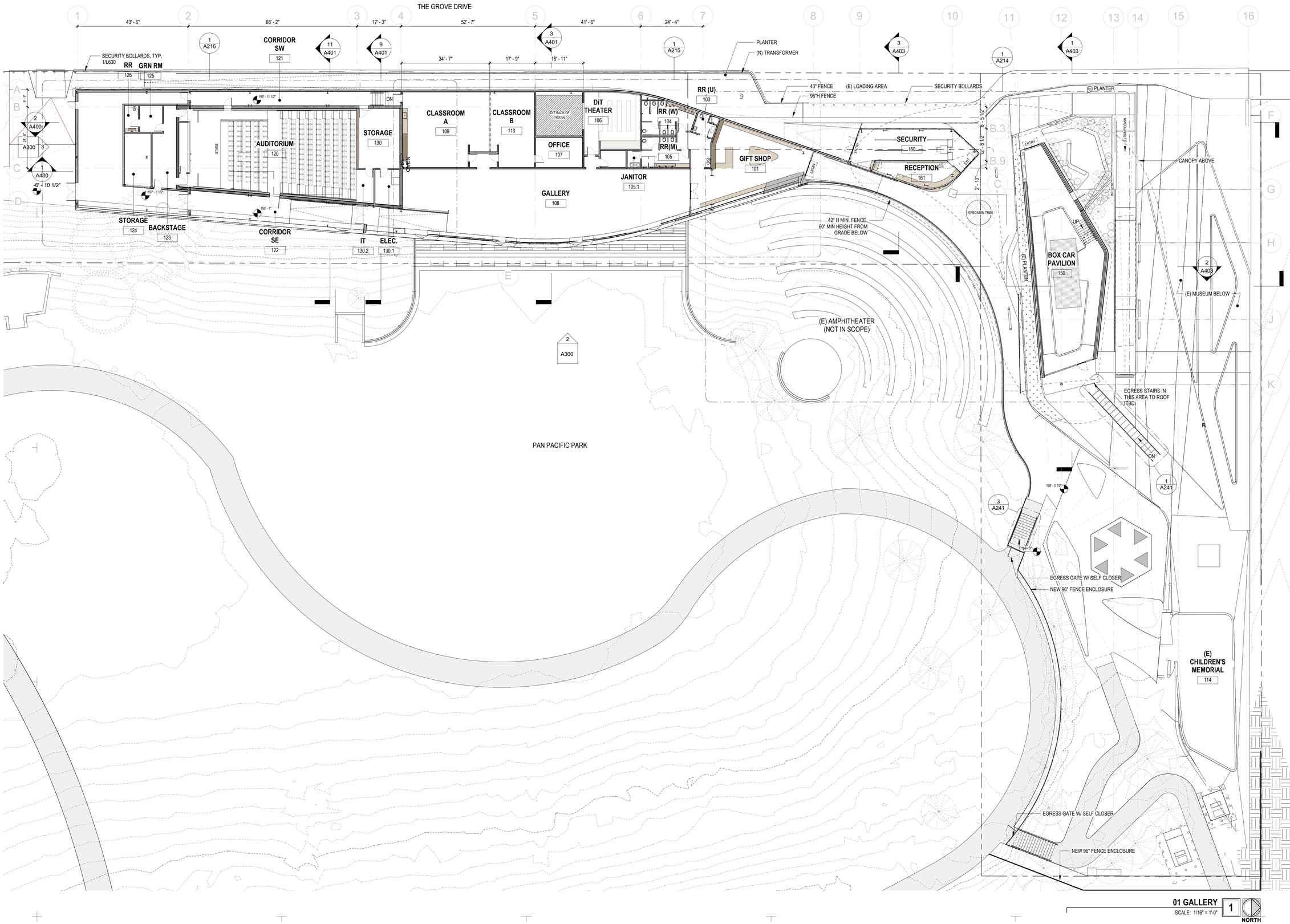

01 GALLERY 1
SCALE: 1/16" = 1'-0"

NORTH

NOT FOR CONSTRUCTION

17.NOV.2021
100% DESIGN SUBMITTAL

ba
belzberg architects
2740 MAIN STREET
SANTA MONICA, CA 90405
310.453.9611
www.belzbergarchitects.com

#	DESCRIPTION	DATE

HOLOCAUST MUSEUM LA EXPANSION

100 THE GROVE DRIVE
LOS ANGELES, CA 90036

FLOOR PLAN - OVERALL

PROJECT NUMBER: 17009

A211

11/18/2021 11:50:47 AM

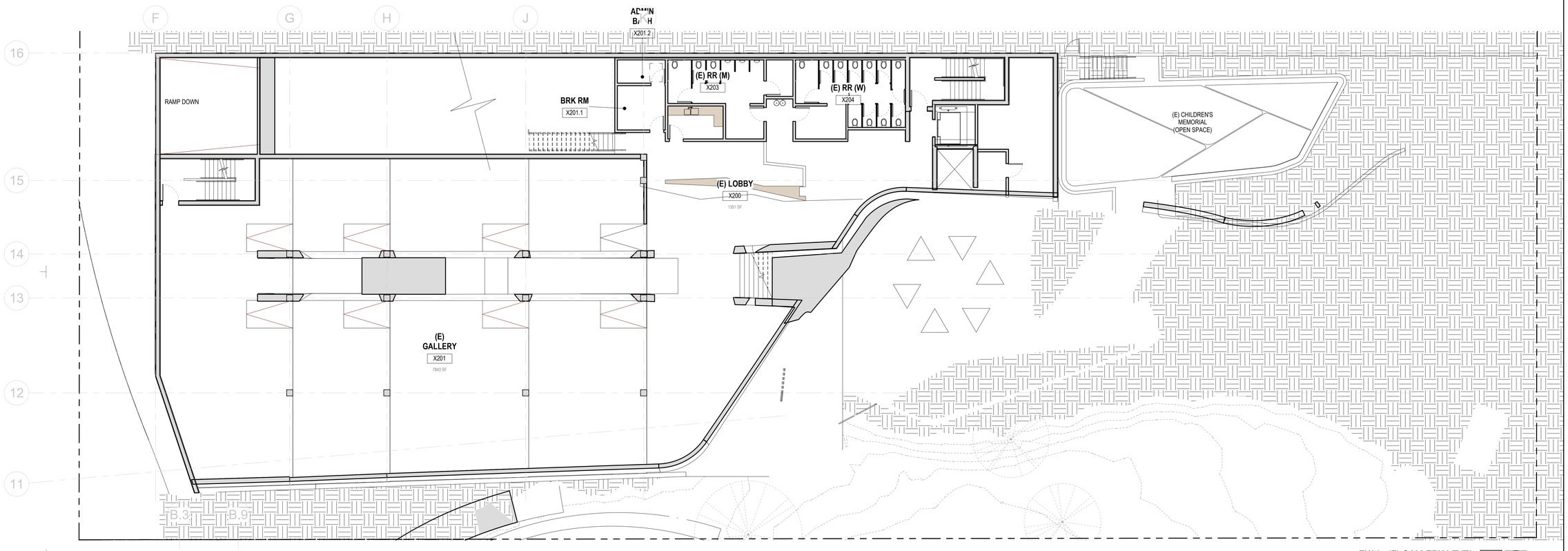

EX01 - (E) GALLERY LEVEL 2
SCALE: 3/32" = 1'-0"

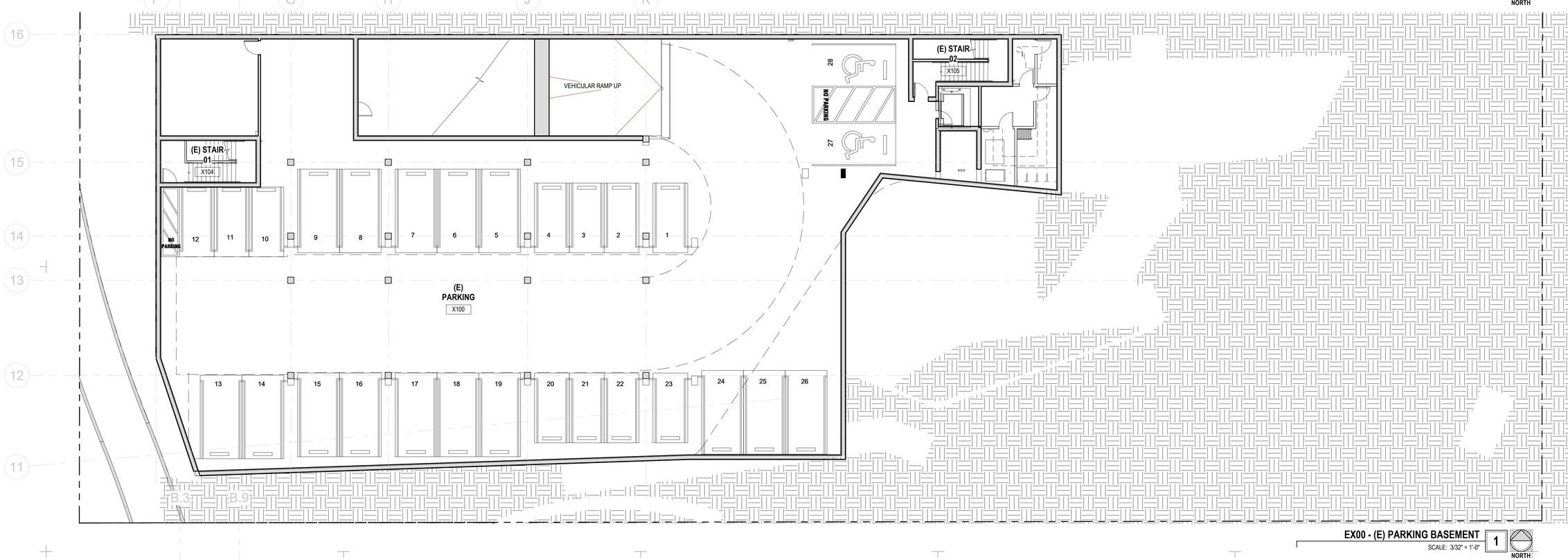

EX00 - (E) PARKING BASEMENT 1
SCALE: 3/32" = 1'-0"

NORTH

NOT FOR CONSTRUCTION

17.NOV.2021
100% DESIGN SUBMITTAL

belzberg architects
2740 MAIN STREET
SANTA MONICA, CA 90405
310.453.9611
www.belzbergarchitects.com

#	DESCRIPTION	DATE

HOLOCAUST MUSEUM LA EXPANSION

100 THE GROVE DRIVE
LOS ANGELES, CA 90036

FLOOR PLANS - EXISTING MUSEUM

PROJECT NUMBER: 17009

A212

11/18/2021 11:50:54 AM

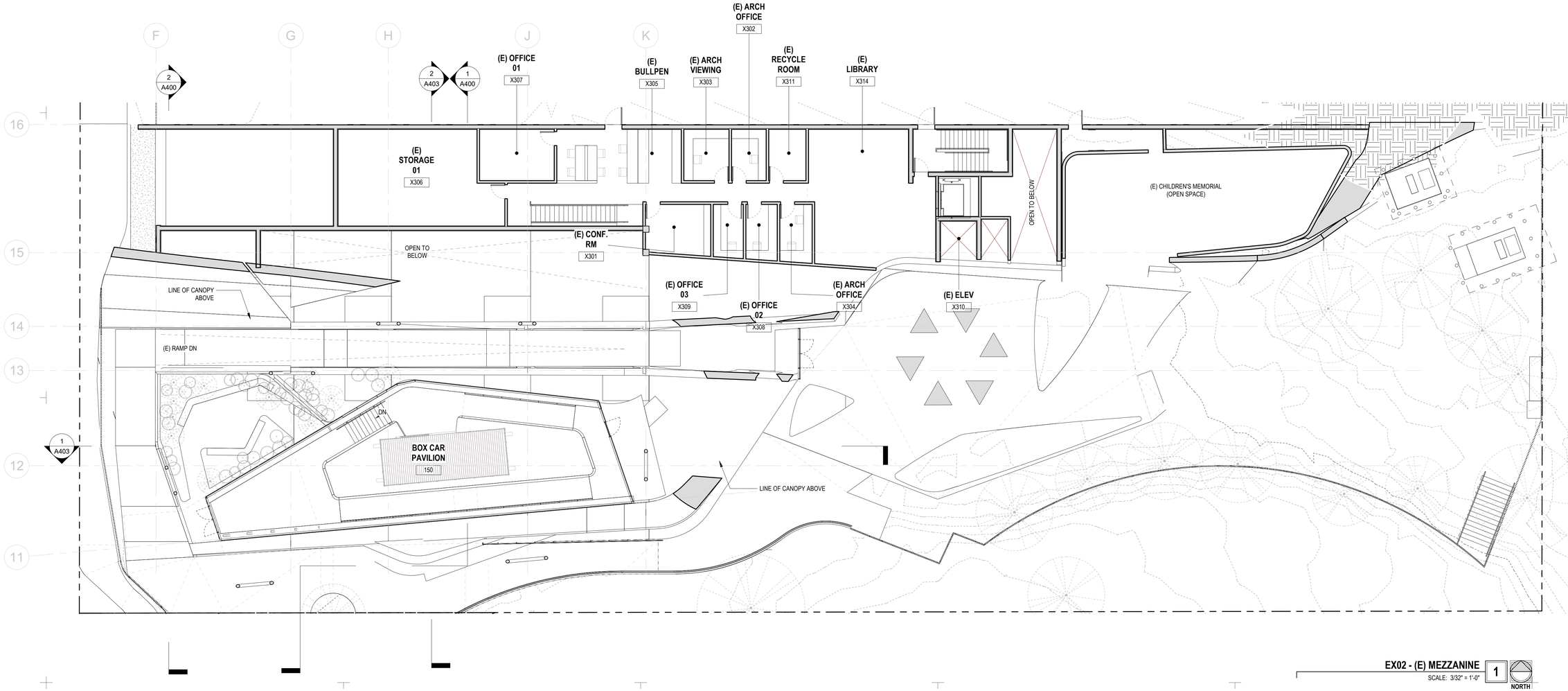

EX02 - (E) MEZZANINE

SCALE: 3/32" = 1'-0"

1

NORTH

NOT FOR CONSTRUCTION

17.NOV.2021
100% DESIGN SUBMITTAL

ba
belzberg architects
2740 MAIN STREET
SANTA MONICA, CA 90405
310.453.9611
www.belzbergarchitects.com

#	DESCRIPTION	DATE

HOLOCAUST
MUSEUM LA
EXPANSION

100 THE GROVE DRIVE
LOS ANGELES, CA 90036

FLOOR PLANS -
EXISTING MUSEUM

PROJECT NUMBER: 17009

A213

11/18/2021 11:30:57 AM

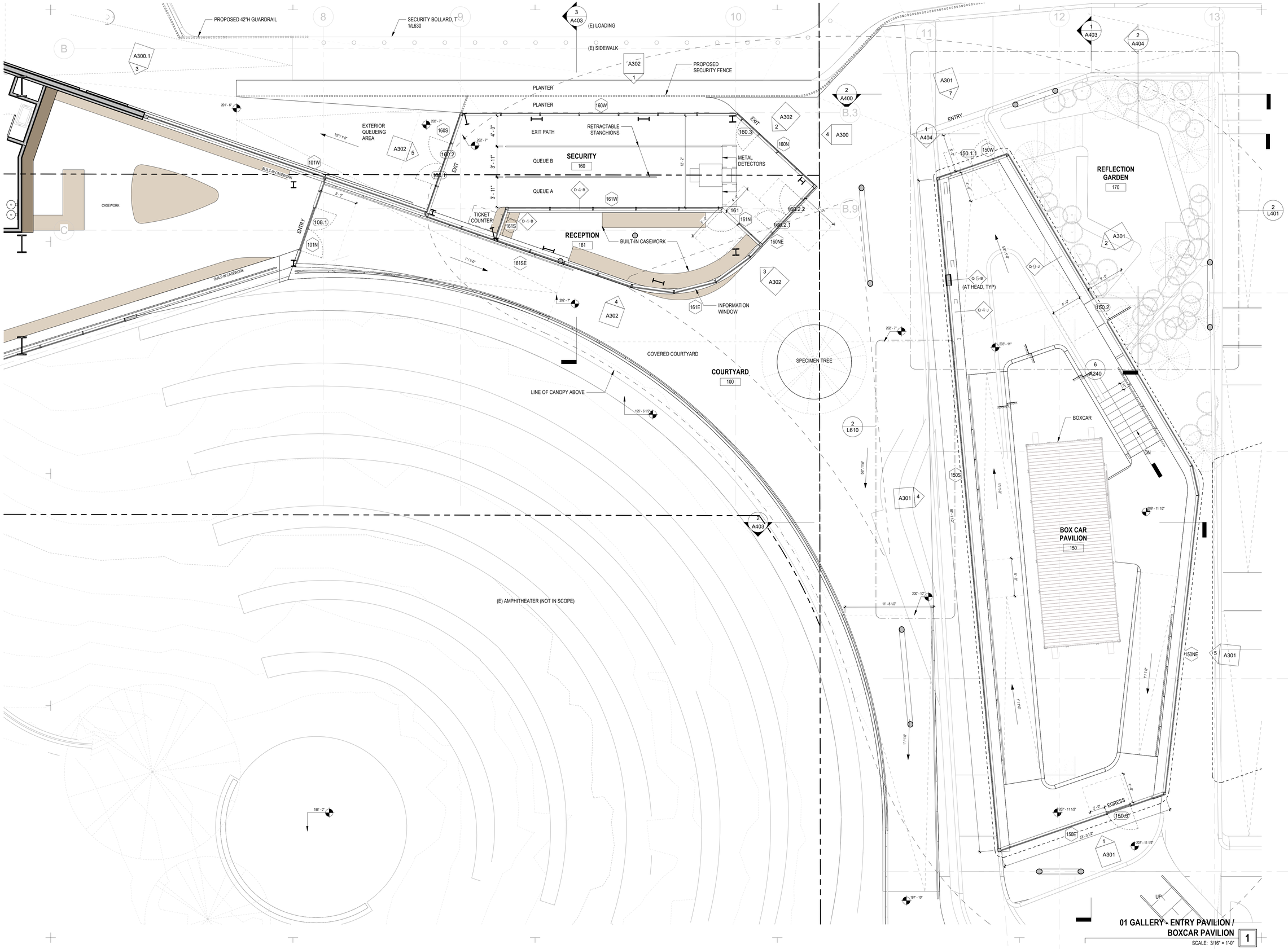

NOT FOR CONSTRUCTION

17.NOV.2021
100% DESIGN SUBMITTAL

belzberg architects
2740 MAIN STREET
SANTA MONICA, CA 90405
310.453.9611
www.belzbergarchitects.com

#	DESCRIPTION	DATE

HOLOCAUST MUSEUM LA EXPANSION

100 THE GROVE DRIVE
LOS ANGELES, CA 90036

FLOOR PLANS - ENTRY PAVILION, BOX CAR PAVILION

PROJECT NUMBER: 17009

A214

11/18/2021 11:32:04 AM

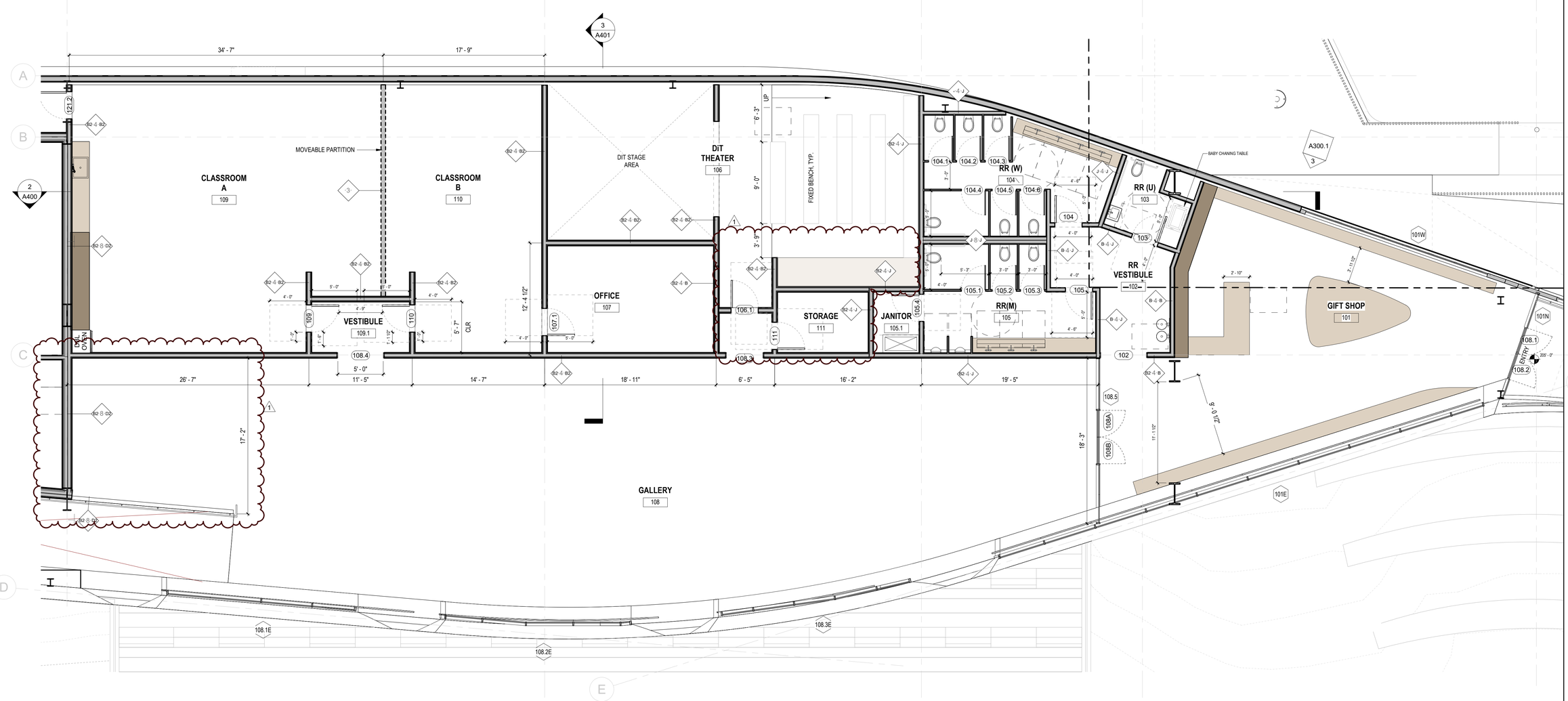

01 GALLERY - NORTH 1

SCALE: 3/16" = 1'-0"

NOT FOR CONSTRUCTION

17.NOV.2021
100% DESIGN SUBMITTAL

ba
belzberg architects
2740 MAIN STREET
SANTA MONICA, CA 90405
310.453.9611
www.belzbergarchitects.com

#	DESCRIPTION	DATE
1	P.C. VERIF 1	12/10/2021

HOLOCAUST MUSEUM LA EXPANSION

100 THE GROVE DRIVE
LOS ANGELES, CA 90036

FLOOR PLANS - NORTH

PROJECT NUMBER: 17009

A215

11/18/2021 11:52:07 AM

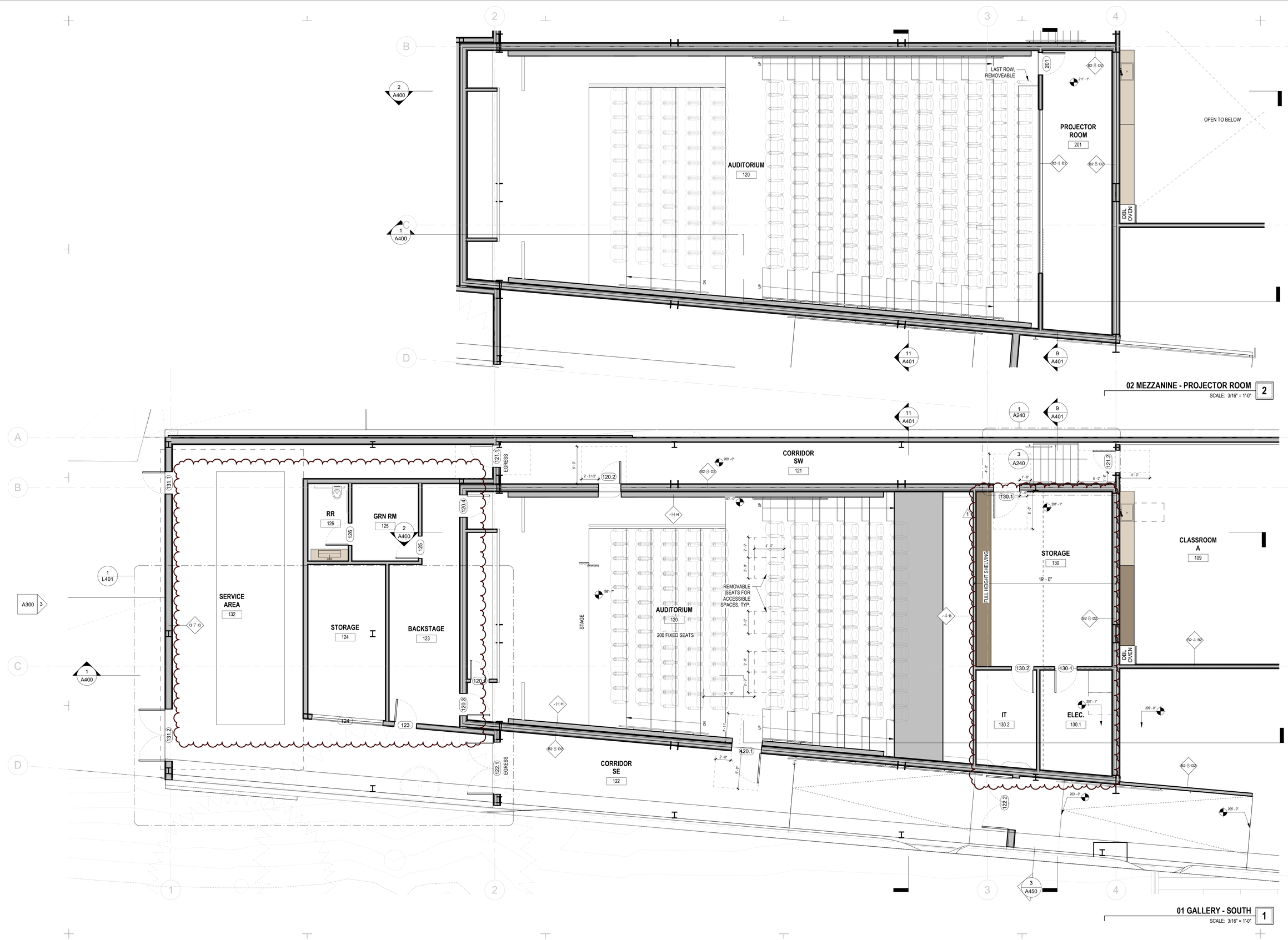

02 MEZZANINE - PROJECTOR ROOM 2

SCALE: 3/16" = 1'-0"

01 GALLERY - SOUTH 1

SCALE: 3/16" = 1'-0"

NOT FOR CONSTRUCTION

17.NOV.2021
100% DESIGN SUBMITTAL

belzberg architects
2740 MAIN STREET
SANTA MONICA, CA 90405
310.453.9611
www.belzbergarchitects.com

#	DESCRIPTION	DATE
1	P.C. VERIF 1	12/10/2021

HOLOCAUST MUSEUM LA EXPANSION

100 THE GROVE DRIVE
LOS ANGELES, CA 90036

FLOOR PLANS - SOUTH

PROJECT NUMBER: 17009

A216

11/18/2021 11:52:14 AM

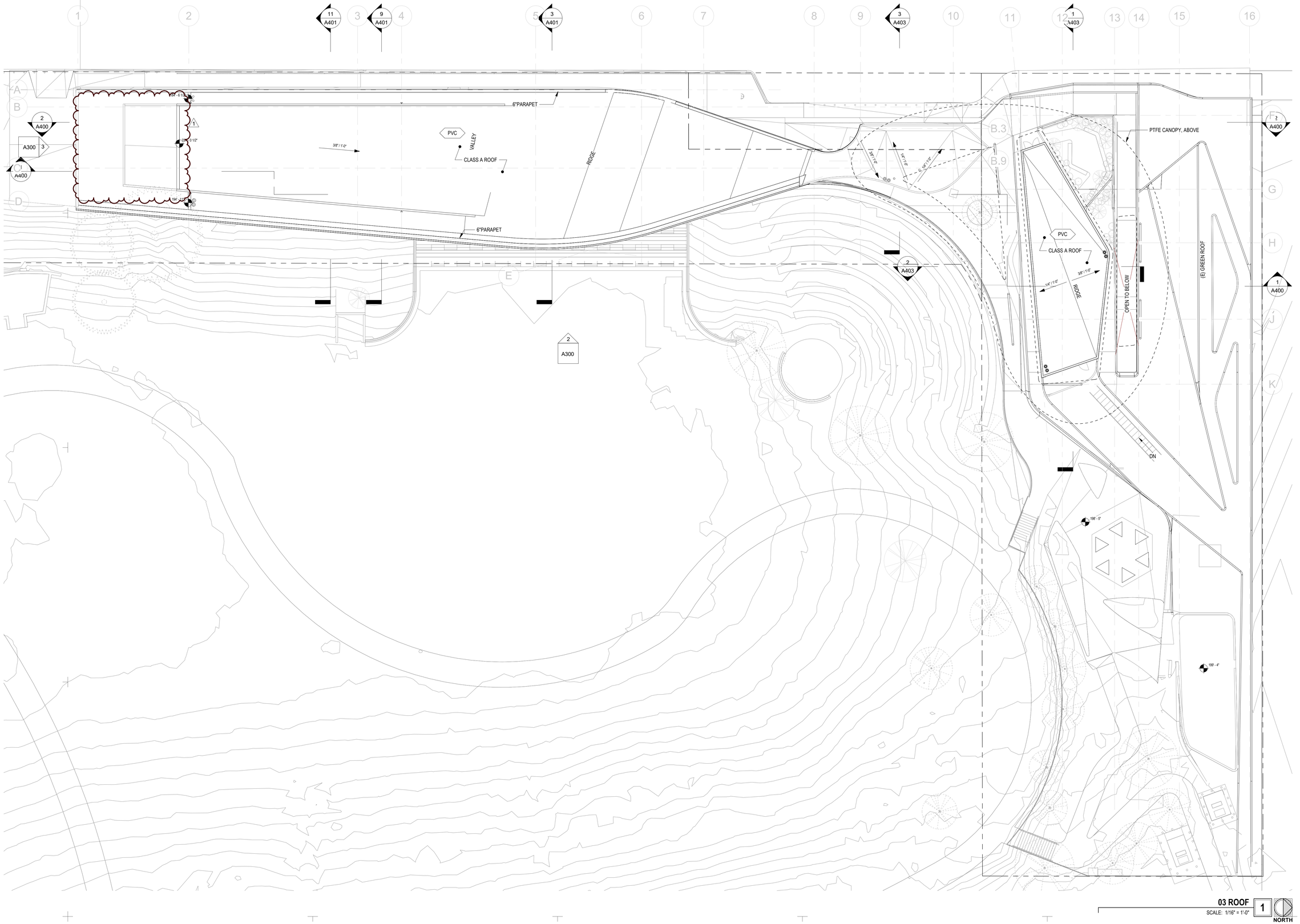

03 ROOF
SCALE: 1/16" = 1'-0"

1

NORTH

NOT FOR CONSTRUCTION

17.NOV.2021
100% DESIGN SUBMITTAL

belzberg architects
2740 MAIN STREET
SANTA MONICA, CA 90405
310.453.9611

www.belzbergarchitects.com

#	DESCRIPTION	DATE
1	P.C. VERIF 1	12/10/2021

HOLOCAUST MUSEUM LA EXPANSION

100 THE GROVE DRIVE
LOS ANGELES, CA 90036

ROOF PLAN

PROJECT NUMBER: 17009

A219

11/18/2021 11:32:54 AM

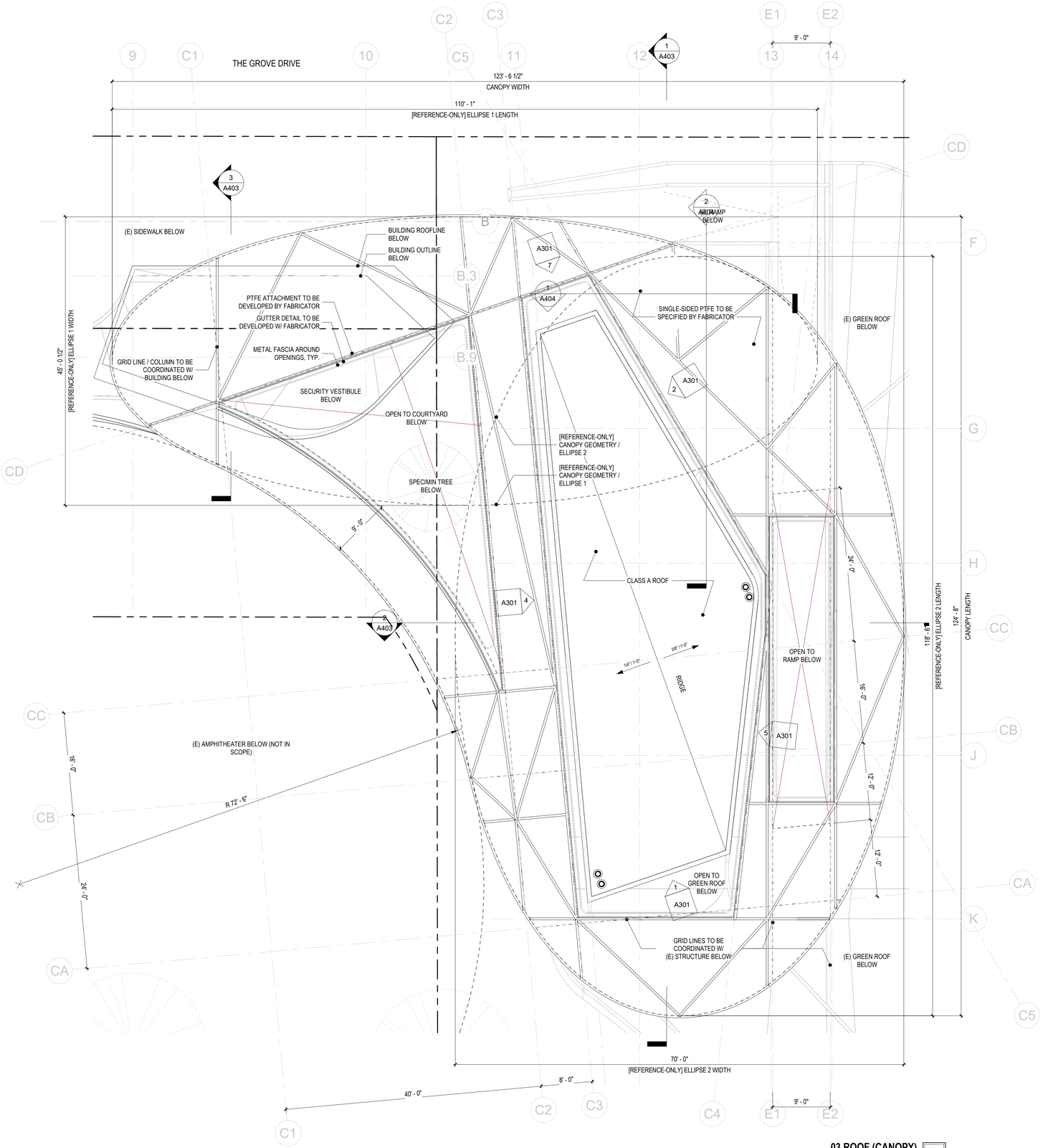

03 ROOF (CANOPY) 1

SCALE: 1/8" = 1'-0"

NOT FOR CONSTRUCTION

17.NOV.2021
100% DESIGN SUBMITTAL

belzberg architects
2740 MAIN STREET
SANTA MONICA, CA 90405
310.453.9611
www.belzbergarchitects.com

#	DESCRIPTION	DATE

HOLOCAUST MUSEUM LA EXPANSION

100 THE GROVE DRIVE
LOS ANGELES, CA 90036

CANOPY ROOF PLAN

PROJECT NUMBER: 17009

A220

11/18/2021 11:53:28 AM

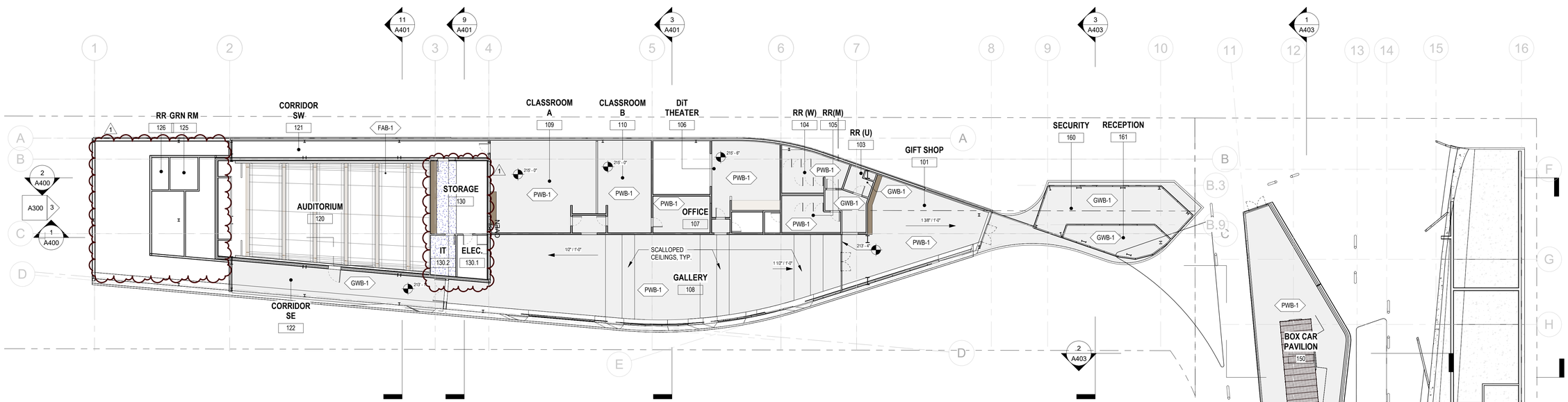

02 MEZZANINE 2
SCALE: 1/16" = 1'-0"

01 GALLERY 1
SCALE: 1/16" = 1'-0"

NORTH

NOT FOR CONSTRUCTION

17.NOV.2021
100% DESIGN SUBMITTAL

ba
belzberg architects
2740 MAIN STREET
SANTA MONICA, CA 90405
310.453.9611
www.belzbergarchitects.com

#	DESCRIPTION	DATE
1	P.C. VERIF 1	12/10/2021

HOLOCAUST MUSEUM LA EXPANSION

100 THE GROVE DRIVE
LOS ANGELES, CA 90036

GROUND FLOOR RCP KEY

PROJECT NUMBER: 17009

A231

11/19/2021 11:53:33 AM

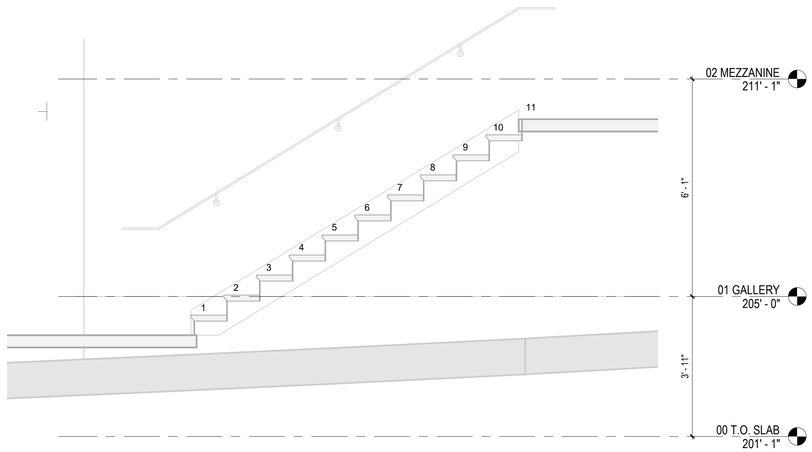

STAIR 3 SECTION 6
SCALE: 1/2" = 1'-0"

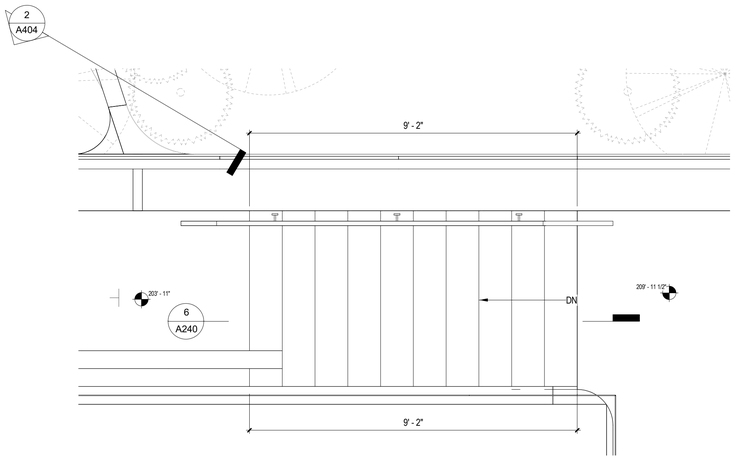

ENLARGED STAIR 3 PLAN 5
SCALE: 1/2" = 1'-0"

1

1

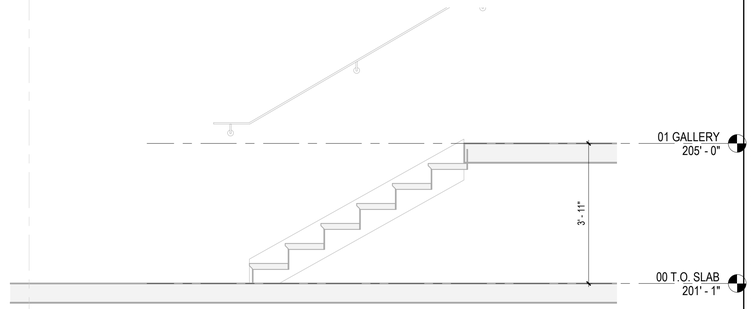

STAIR 1 SECTION 3
SCALE: 1/2" = 1'-0"

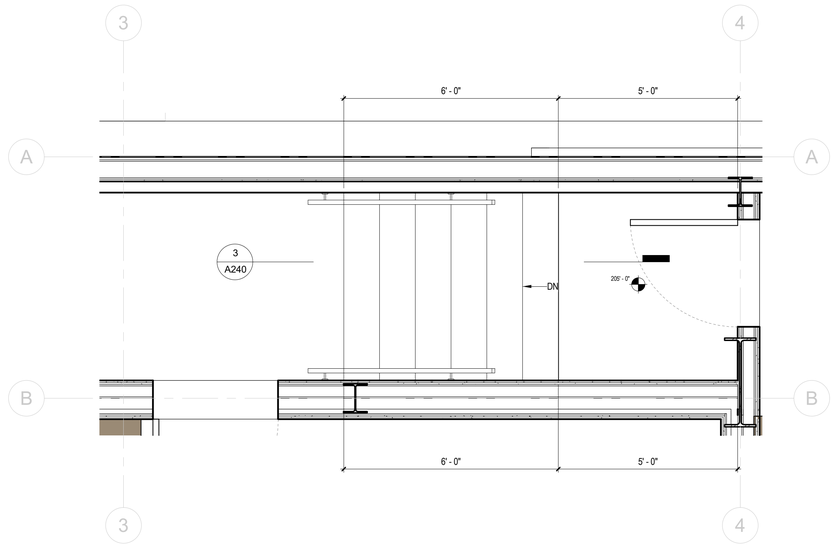

ENLARGED STAIR 1 PLAN 1
SCALE: 1/2" = 1'-0"

NOT FOR CONSTRUCTION

17.NOV.2021
100% DESIGN SUBMITTAL

ba
belzberg architects
2740 MAIN STREET
SANTA MONICA, CA 90405
310.453.9611
www.belzbergarchitects.com

#	DESCRIPTION	DATE
1	P.C. VERIF 1	12/10/2021

HOLOCAUST MUSEUM LA EXPANSION

100 THE GROVE DRIVE
LOS ANGELES, CA 90036

ENLARGED STAIR PLANS

PROJECT NUMBER: 17009

A240

11/18/2021 11:53:36 AM

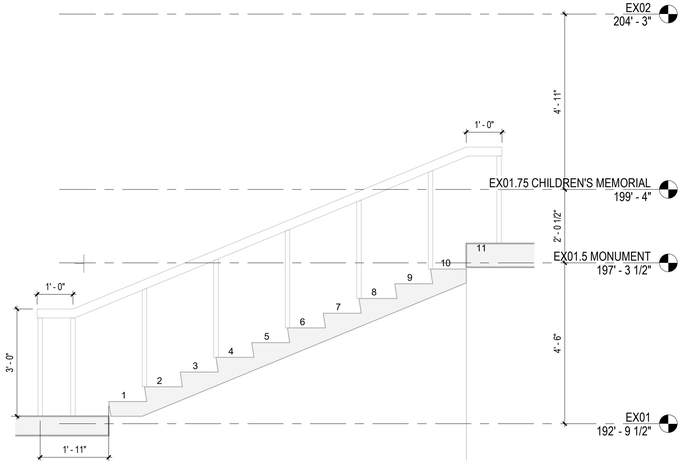

STAIR 5 SECTION 4
SCALE: 1/2" = 1'-0"

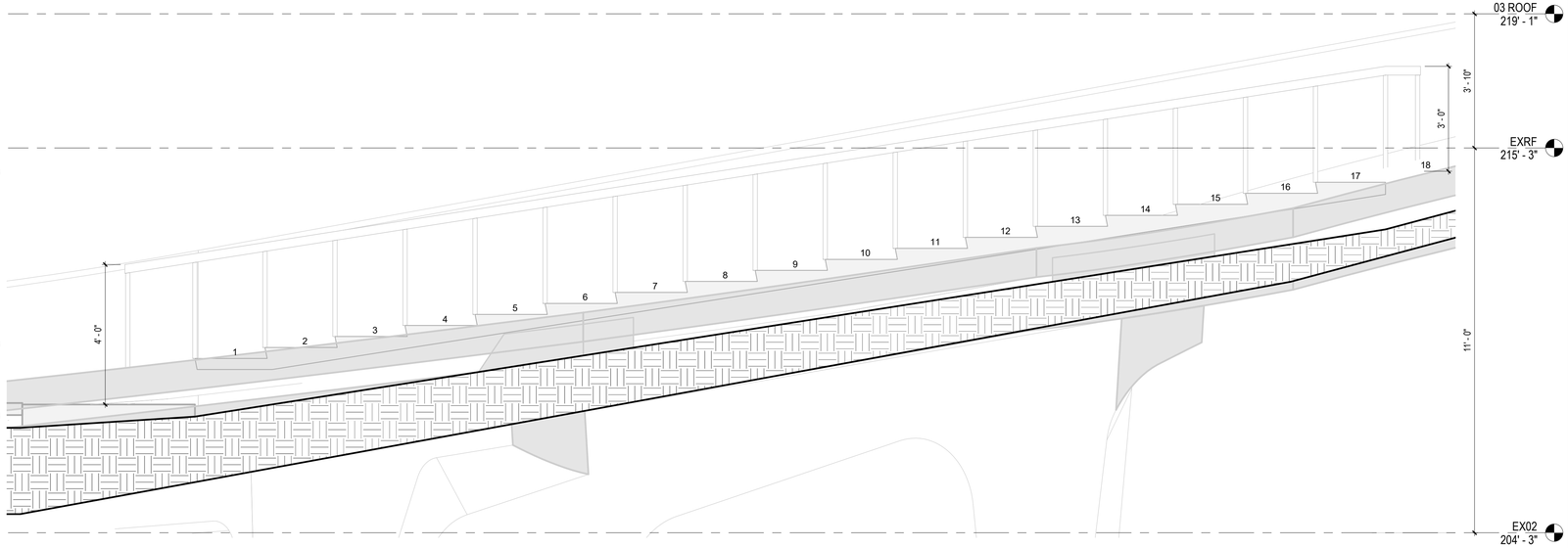

STAIR 4 SECTION 2
SCALE: 1/2" = 1'-0"

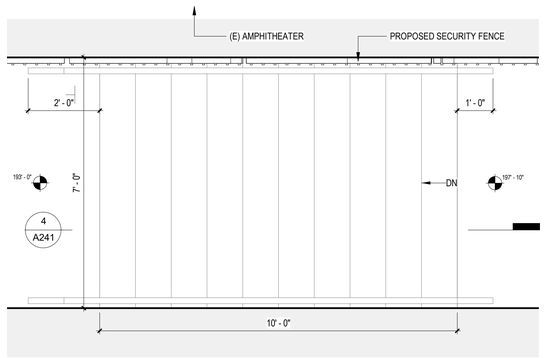

ENLARGED STAIR 5 PLAN 3
SCALE: 1/2" = 1'-0"

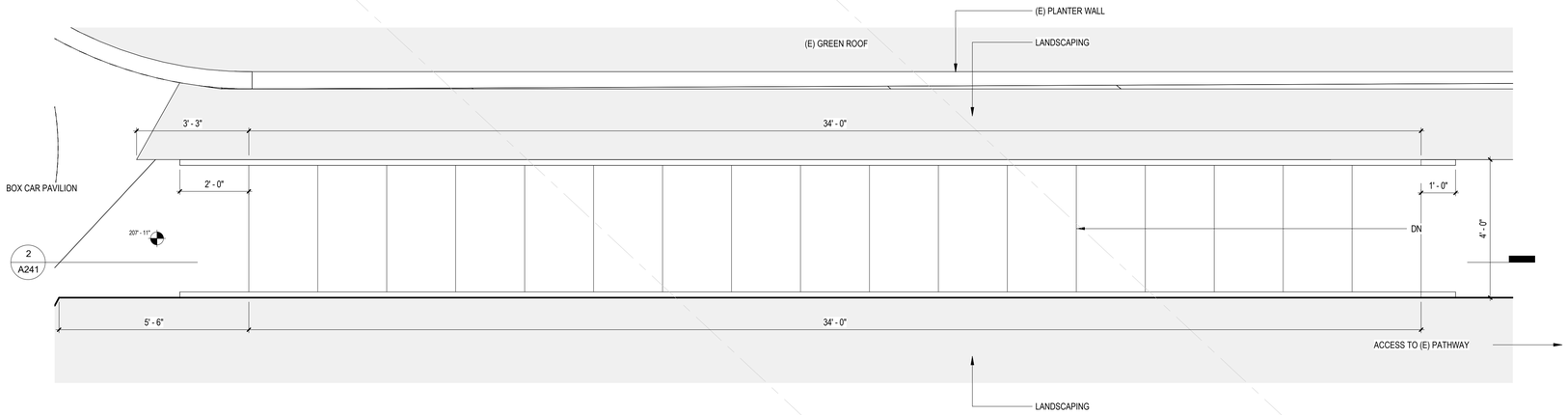

ENLARGED STAIR 4 PLAN 1
SCALE: 1/2" = 1'-0"

13 14 13 14

NOT FOR CONSTRUCTION

17.NOV.2021
100% DESIGN SUBMITTAL

ba
belzberg architects
2740 MAIN STREET
SANTA MONICA, CA 90405
310.453.9611
www.belzbergarchitects.com

#	DESCRIPTION	DATE

HOLOCAUST MUSEUM LA EXPANSION

100 THE GROVE DRIVE
LOS ANGELES, CA 90036

ENLARGED STAIR PLANS

PROJECT NUMBER: 17009

A241

11/18/2021 11:33:40 AM

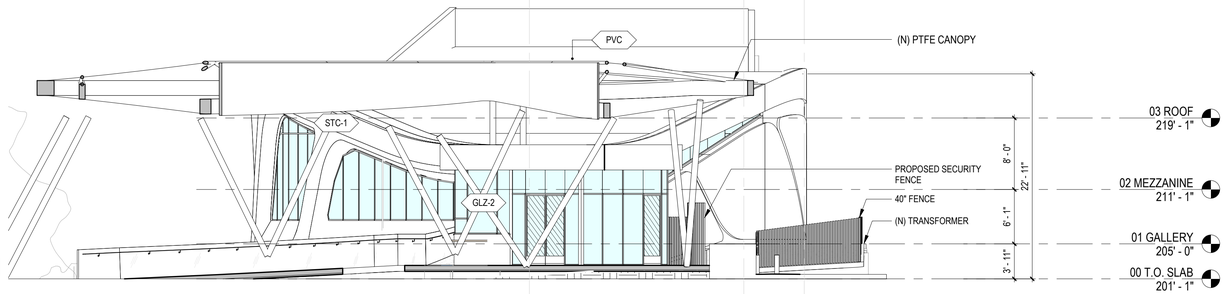

NORTH ELEVATION 4
SCALE: 1/8" = 1'-0"

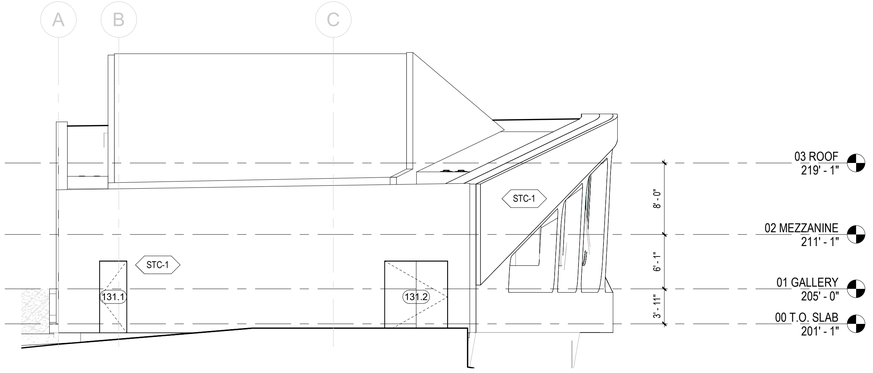

SOUTH ELEVATION 3
SCALE: 1/8" = 1'-0"

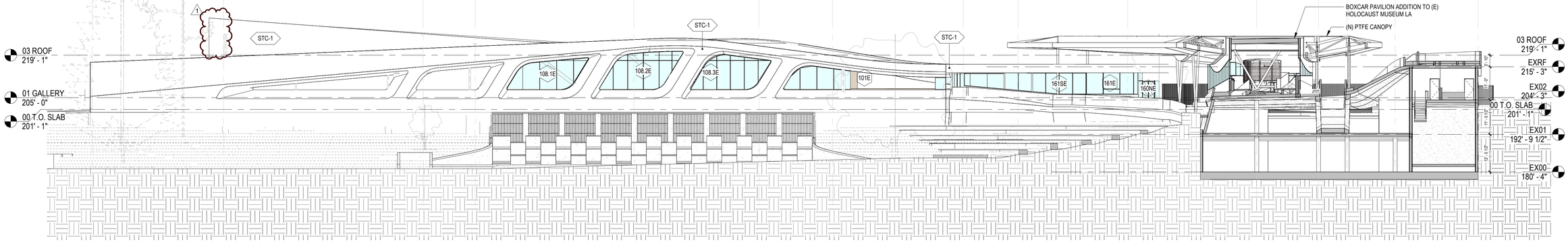

EAST ELEVATION 2
SCALE: 1/16" = 1'-0"

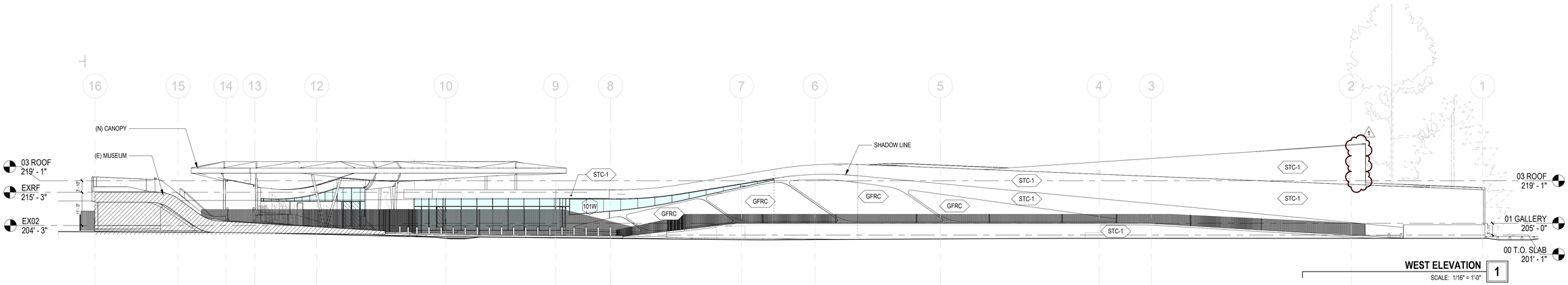

WEST ELEVATION 1
SCALE: 1/16" = 1'-0"

NOT FOR CONSTRUCTION

17.NOV.2021
100% DESIGN SUBMITTAL

ba
belzberg architects
2740 MAIN STREET
SANTA MONICA, CA 90405
310.453.9611
www.belzbergarchitects.com

#	DESCRIPTION	DATE
1	P.C. VERIF 1	12/10/2021

HOLOCAUST MUSEUM LA EXPANSION

100 THE GROVE DRIVE
LOS ANGELES, CA 90036

EXTERIOR ELEVATIONS - LEARNING CENTER

PROJECT NUMBER: 17009

A300

11/18/2021 11:53:54 AM

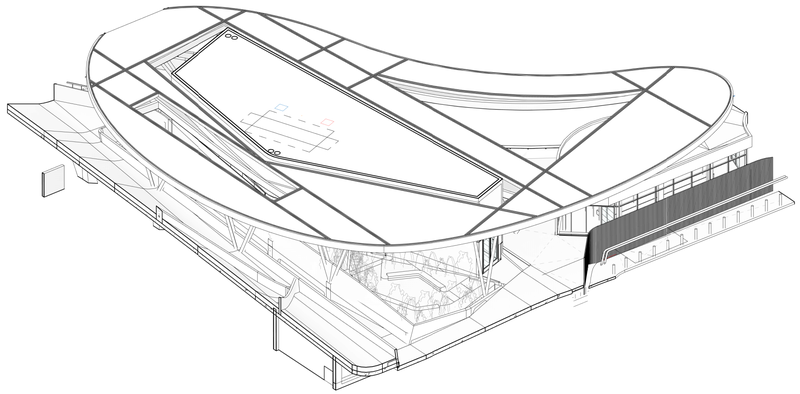

BOXCAR 3D NW
SCALE: 6

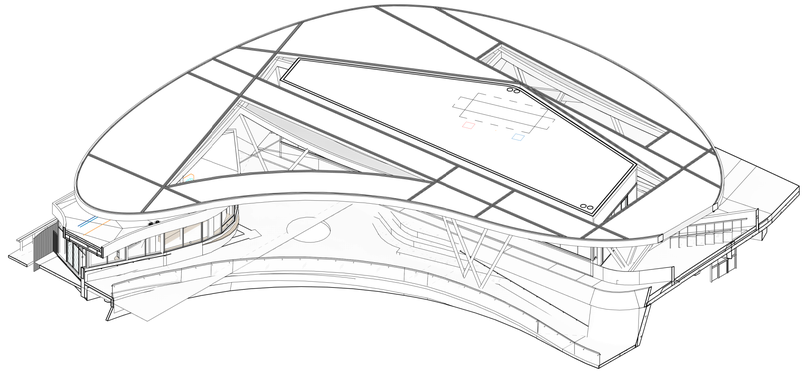

BOXCAR 3D SE
SCALE: 3

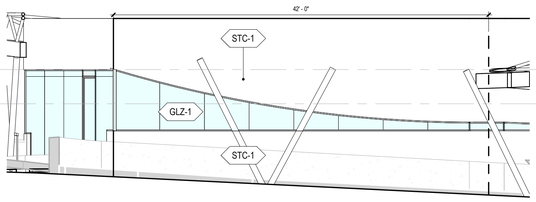

BOXCAR - NE
SCALE: 1/8" = 1'-0" 5

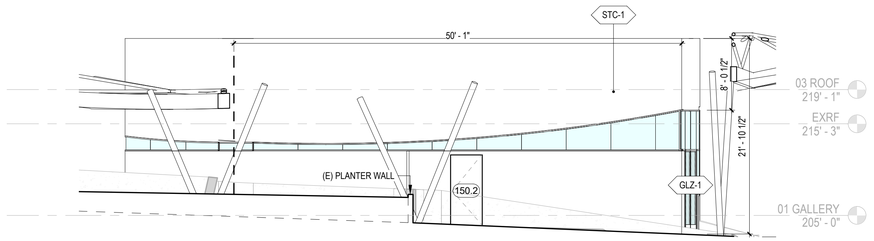

BOXCAR - NW
SCALE: 1/8" = 1'-0" 2

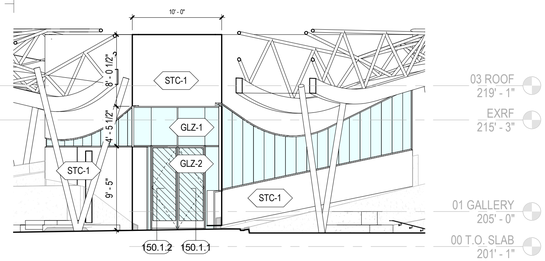

BOXCAR - W
SCALE: 1/8" = 1'-0" 7

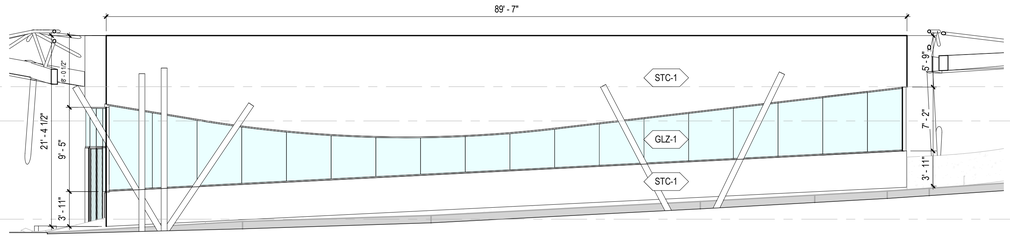

BOXCAR - S
SCALE: 1/8" = 1'-0" 4

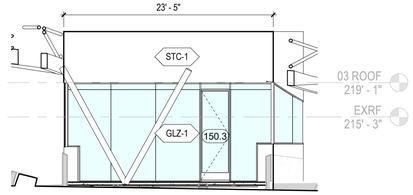

BOXCAR - E
SCALE: 1/8" = 1'-0" 1

NOT FOR CONSTRUCTION

17.NOV.2021
100% DESIGN SUBMITTAL

ba
belzberg architects
2740 MAIN STREET
SANTA MONICA, CA 90405
310.453.9611
www.belzbergarchitects.com

#	DESCRIPTION	DATE

HOLOCAUST MUSEUM LA EXPANSION

100 THE GROVE DRIVE
LOS ANGELES, CA 90036

EXTERIOR ELEVATIONS - BOXCAR PAVILION

PROJECT NUMBER: 17009

A301

11/18/2021 11:54:11 AM

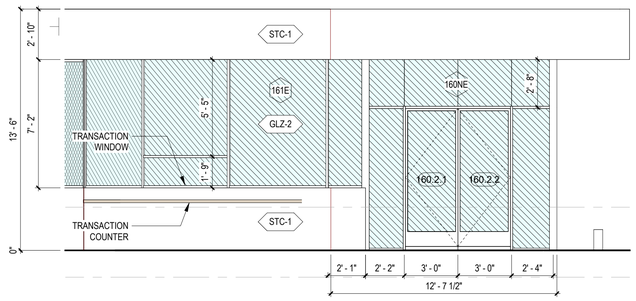

ENTRY PAVILION / ELEVATION 3 3
SCALE: 1/4" = 1'-0"

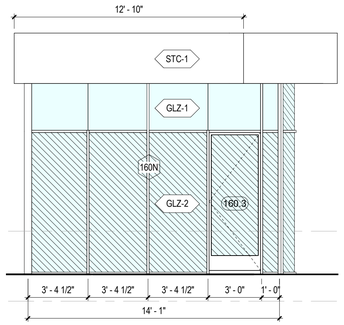

ENTRY PAVILION / ELEVATION 2 2
SCALE: 1/4" = 1'-0"

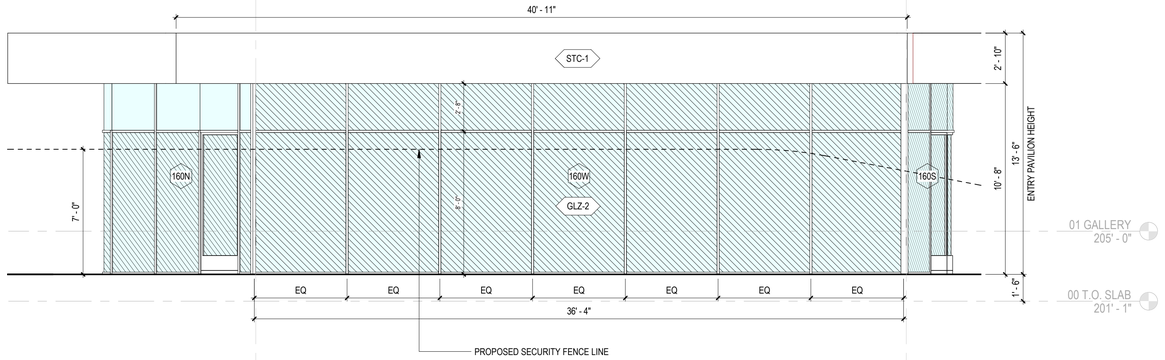

ENTRY PAVILION / ELEVATION 1 1
SCALE: 1/4" = 1'-0"

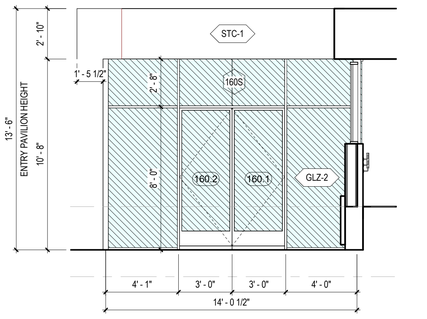

ENTRY PAVILION / ELEVATION 5 5
SCALE: 1/4" = 1'-0"

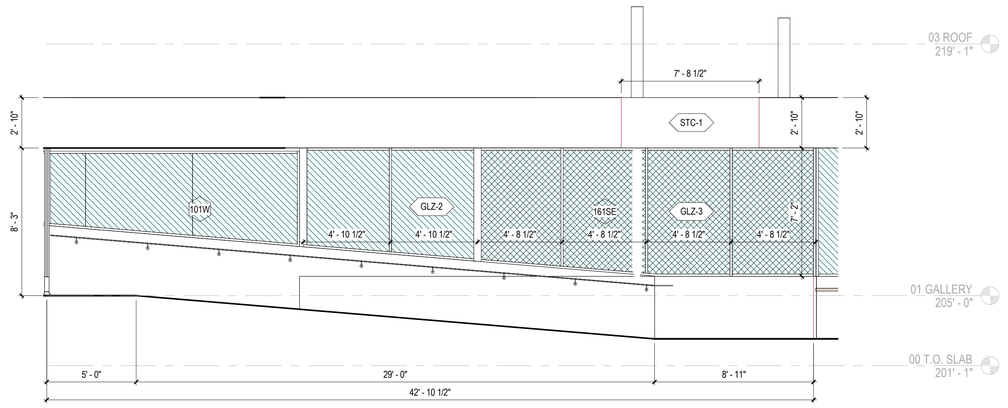

ENTRY PAVILION / ELEVATION 4 4
SCALE: 1/4" = 1'-0"

NOT FOR CONSTRUCTION

17.NOV.2021
100% DESIGN SUBMITTAL

belzberg architects
2740 MAIN STREET
SANTA MONICA, CA 90405
310.453.9611
www.belzbergarchitects.com

#	DESCRIPTION	DATE

HOLOCAUST
MUSEUM LA
EXPANSION

100 THE GROVE DRIVE
LOS ANGELES, CA 90036

EXTERIOR
ELEVATIONS -
ENTRY PAVILION

PROJECT NUMBER: 17009

A302

11/18/2021 11:54:14 AM

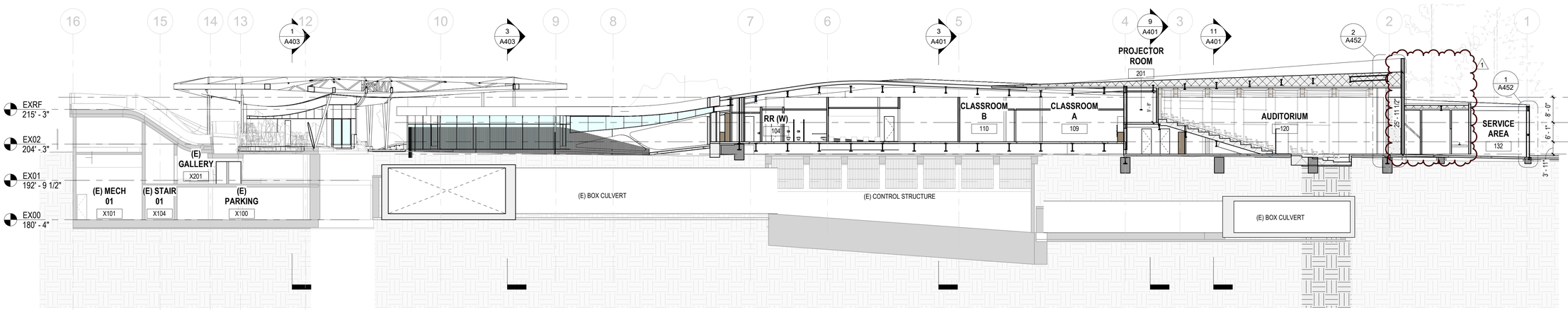

SECTION B-C 2
SCALE: 1/16" = 1'-0"

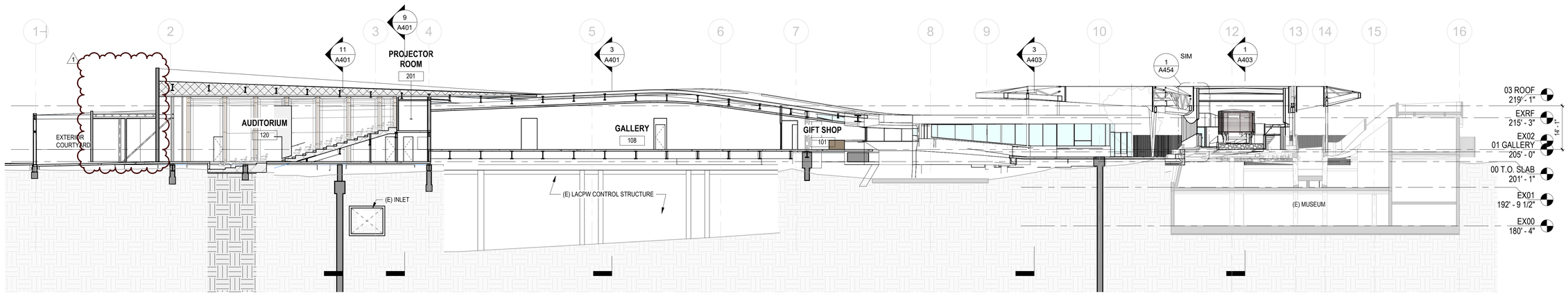

SECTION D-C 1
SCALE: 1/16" = 1'-0"

NOT FOR CONSTRUCTION

17.NOV.2021
100% DESIGN SUBMITTAL

belzberg architects
2740 MAIN STREET
SANTA MONICA, CA 90405
310.453.9611
www.belzbergarchitects.com

#	DESCRIPTION	DATE
1	P.C. VERIF 1	12/10/2021

HOLOCAUST MUSEUM LA EXPANSION

100 THE GROVE DRIVE
LOS ANGELES, CA 90036

BUILDING SECTIONS

PROJECT NUMBER: 17009

A400

11/18/2021 11:54:24 AM

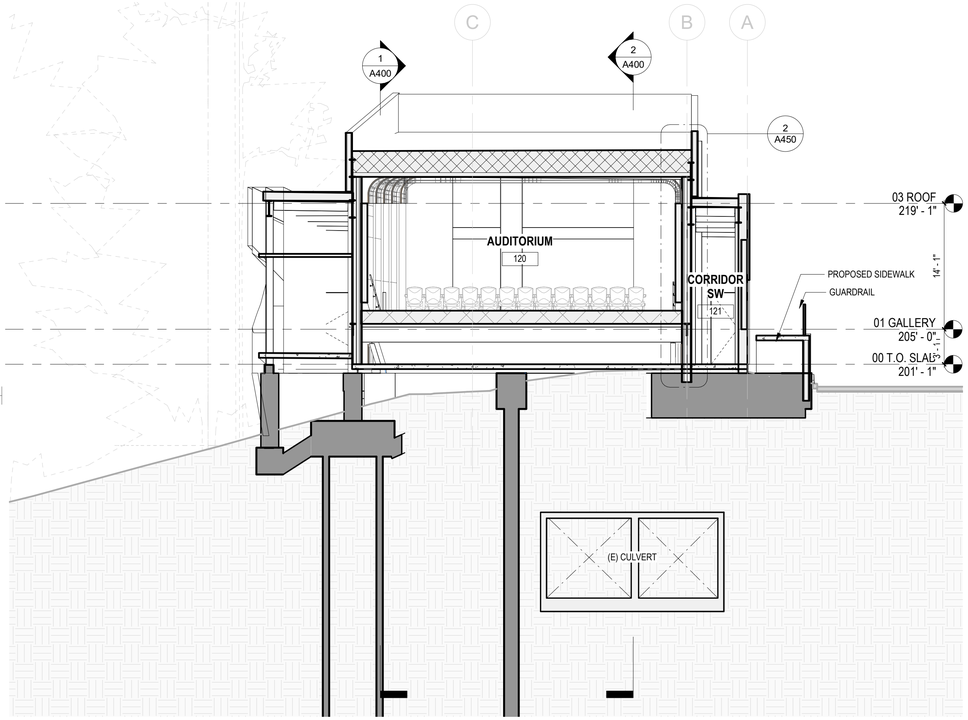

SECTION 3-2 AUDITORIUM 11

SCALE: 1/8" = 1'-0"

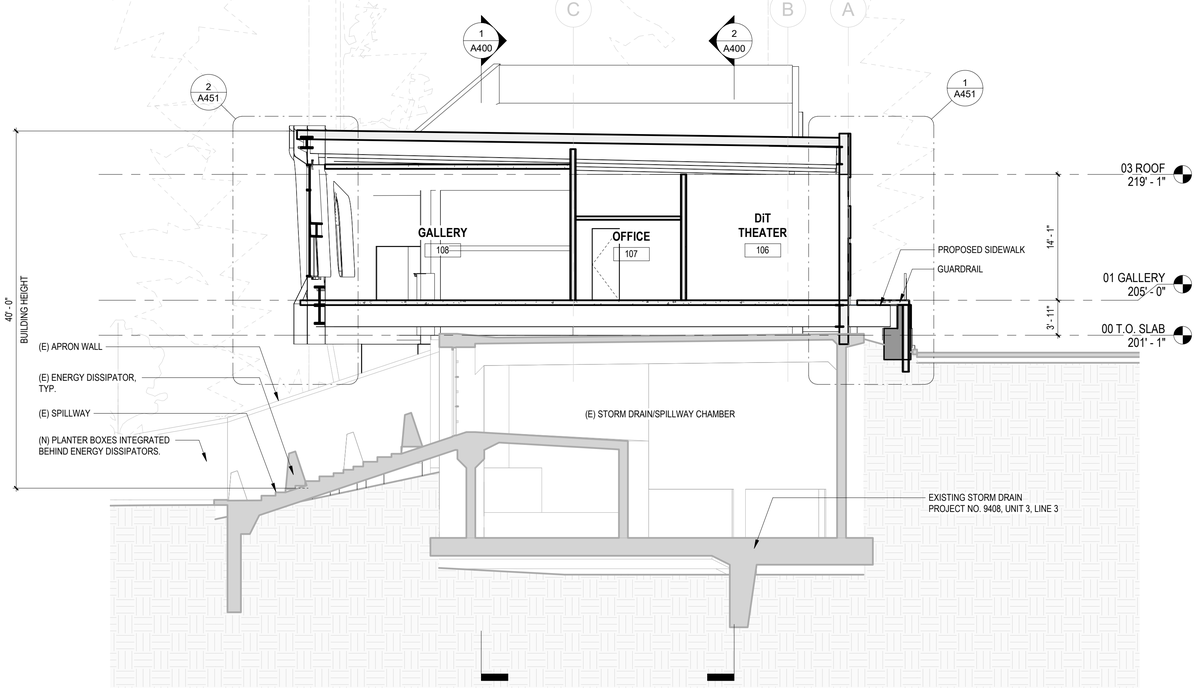

SECTION 6-5 GALLERY 3

SCALE: 1/8" = 1'-0"

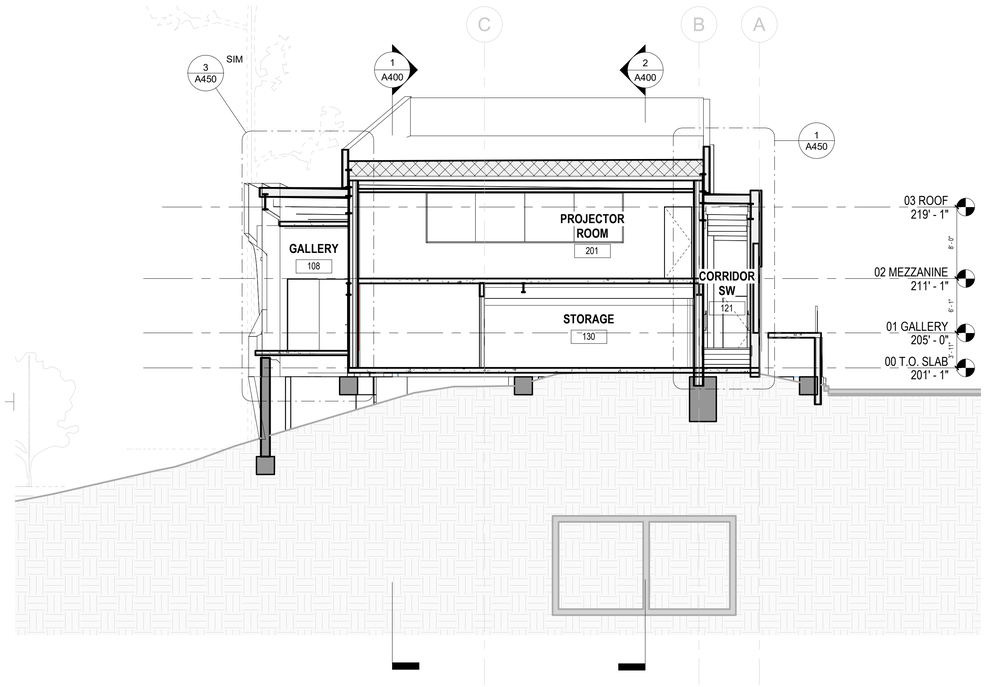

SECTION 4-3 PROJECTION ROOM 9

SCALE: 1/8" = 1'-0"

NOT FOR CONSTRUCTION

17.NOV.2021
100% DESIGN SUBMITTAL

ba
belzberg architects
2740 MAIN STREET
SANTA MONICA, CA 90405
310.453.9611

www.belzbergarchitects.com

#	DESCRIPTION	DATE

HOLOCAUST
MUSEUM LA
EXPANSION

100 THE GROVE DRIVE
LOS ANGELES, CA 90036

BUILDING SECTIONS

PROJECT NUMBER: 17009

A401

11/18/2021 11:54:28 AM

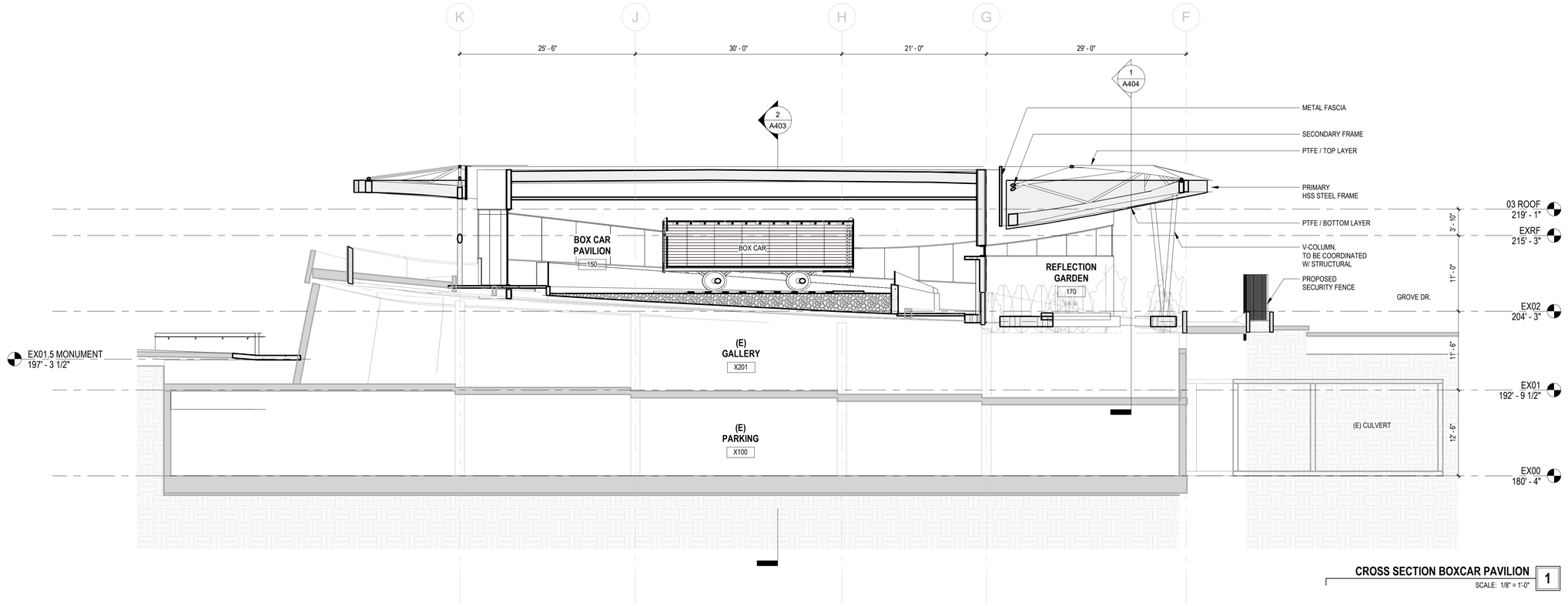

CROSS SECTION BOXCAR PAVILION 1

SCALE: 1/8" = 1'-0"

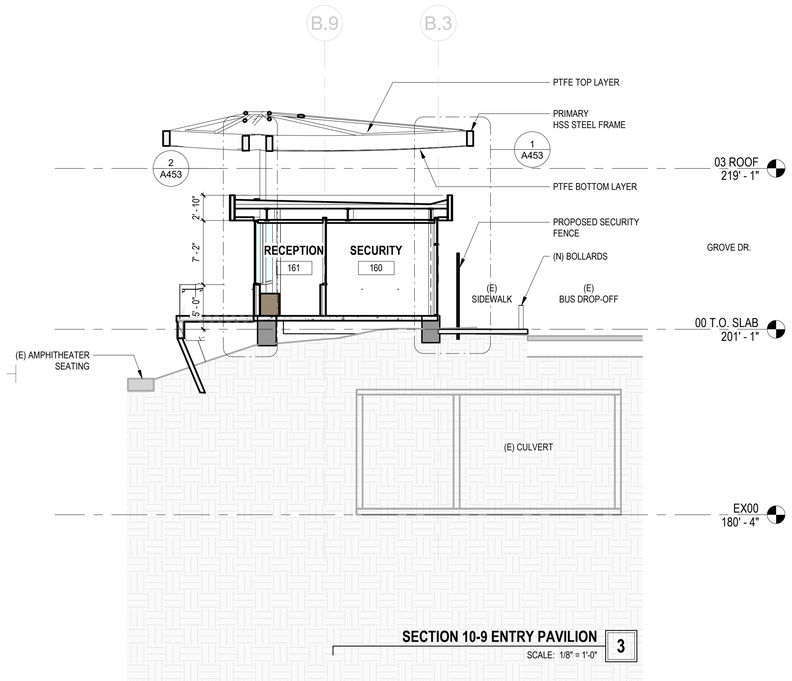

SECTION 10-9 ENTRY PAVILION 3

SCALE: 1/8" = 1'-0"

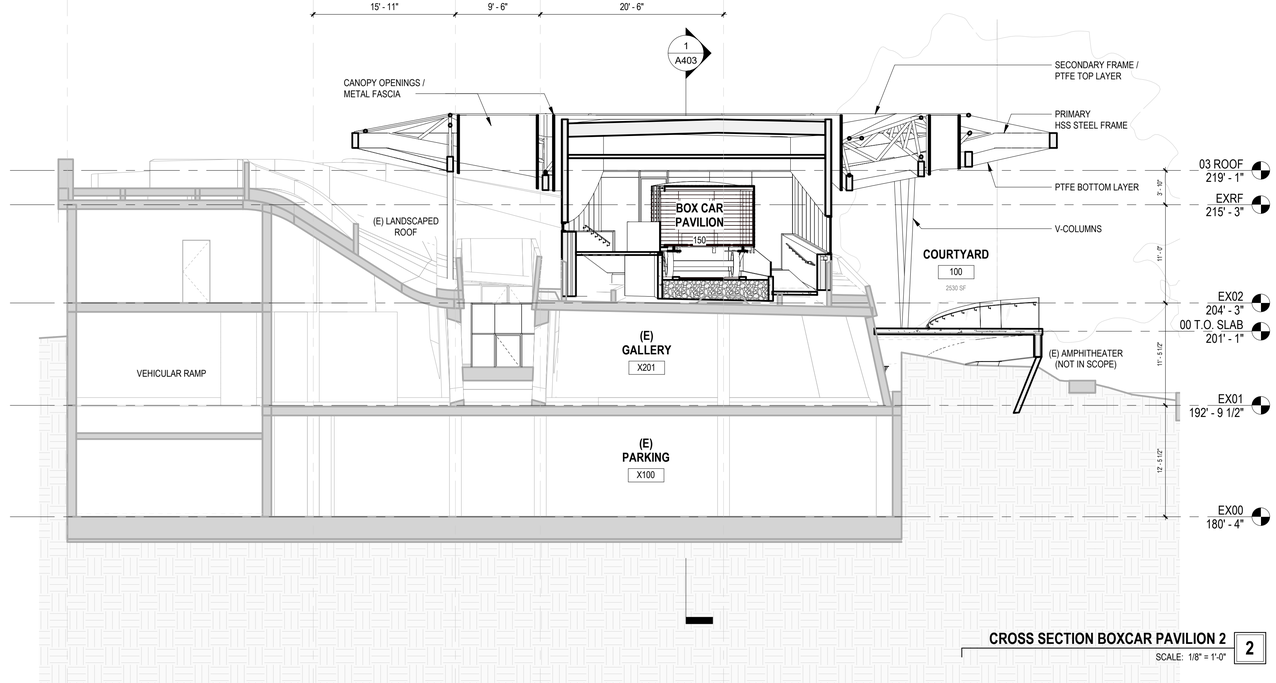

CROSS SECTION BOXCAR PAVILION 2 2

SCALE: 1/8" = 1'-0"

NOT FOR CONSTRUCTION

17.NOV.2021
100% DESIGN SUBMITTAL

ba
belzberg architects
2740 MAIN STREET
SANTA MONICA, CA 90405
310.453.9611
www.belzbergarchitects.com

#	DESCRIPTION	DATE

HOLOCAUST
MUSEUM LA
EXPANSION

100 THE GROVE DRIVE
LOS ANGELES, CA 90036

BUILDING SECTIONS
- CANOPY

PROJECT NUMBER: 17009

A403

11/18/2021 11:54:46 AM

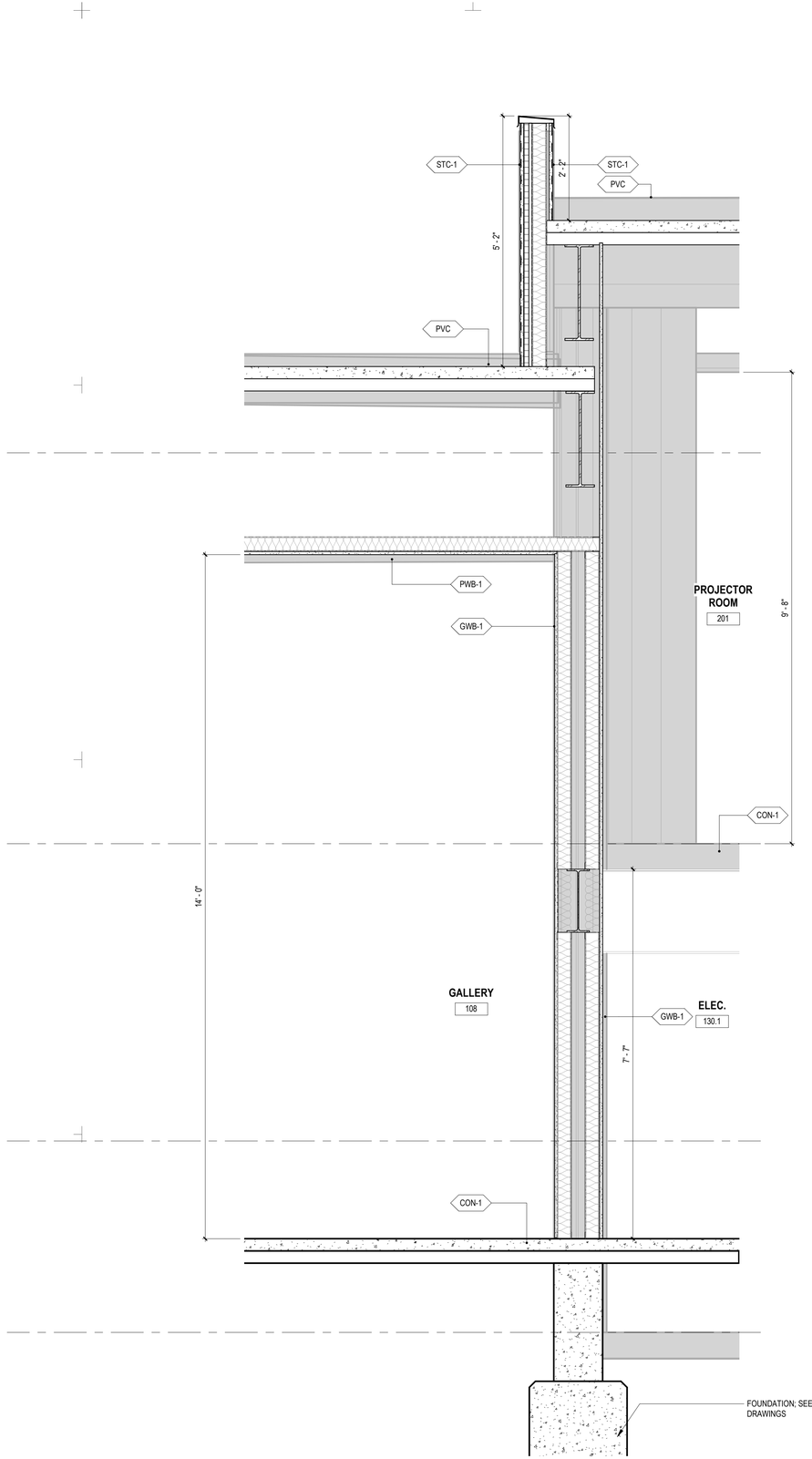

WALL SECTION 4-3 (PROJ. ROOM-E) 3
SCALE: 3/4" = 1'-0"

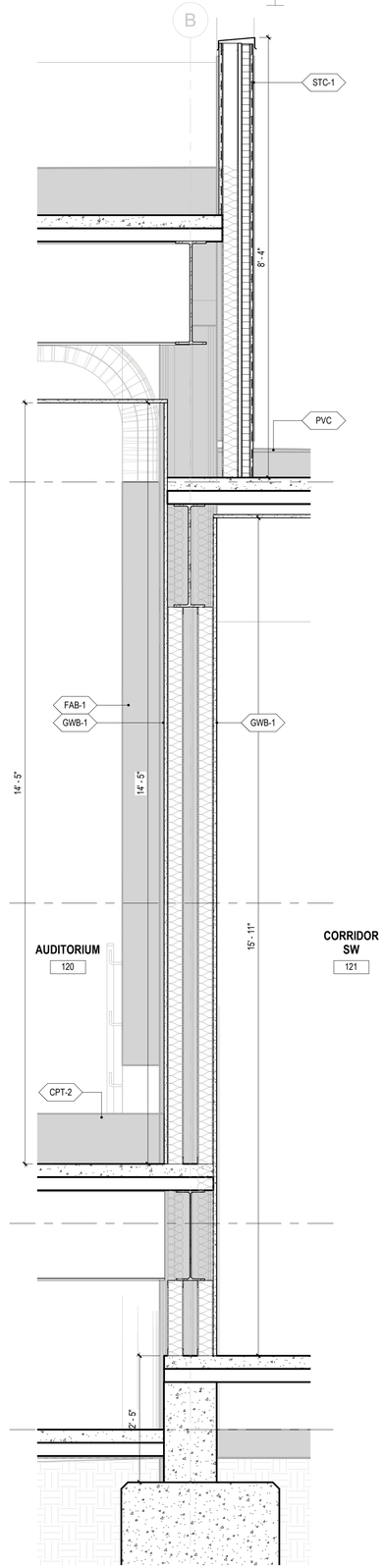

WALL SECTION 3-2 (AUDITORIUM-W) 2
SCALE: 3/4" = 1'-0"

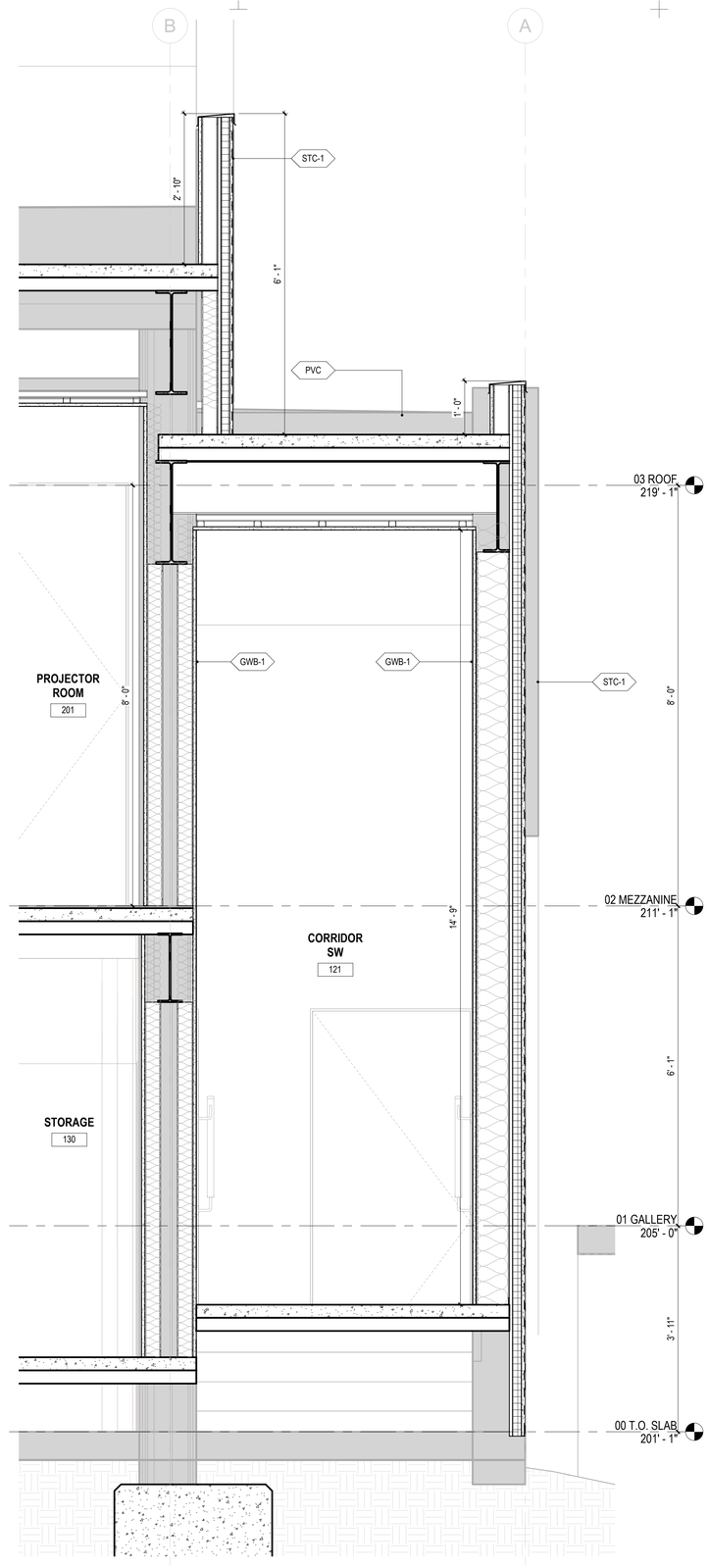

WALL SECTION 4-3 (PROJ. ROOM-W) 1
SCALE: 3/4" = 1'-0"

NOT FOR CONSTRUCTION

17.NOV.2021
100% DESIGN SUBMITTAL

ba
belzberg architects
2740 MAIN STREET
SANTA MONICA, CA 90405
310.453.9611
www.belzbergarchitects.com

#	DESCRIPTION	DATE

HOLOCAUST
MUSEUM LA
EXPANSION

100 THE GROVE DRIVE
LOS ANGELES, CA 90036

WALL SECTIONS

PROJECT NUMBER: 17009

A450

11/18/2021 11:54:48 AM

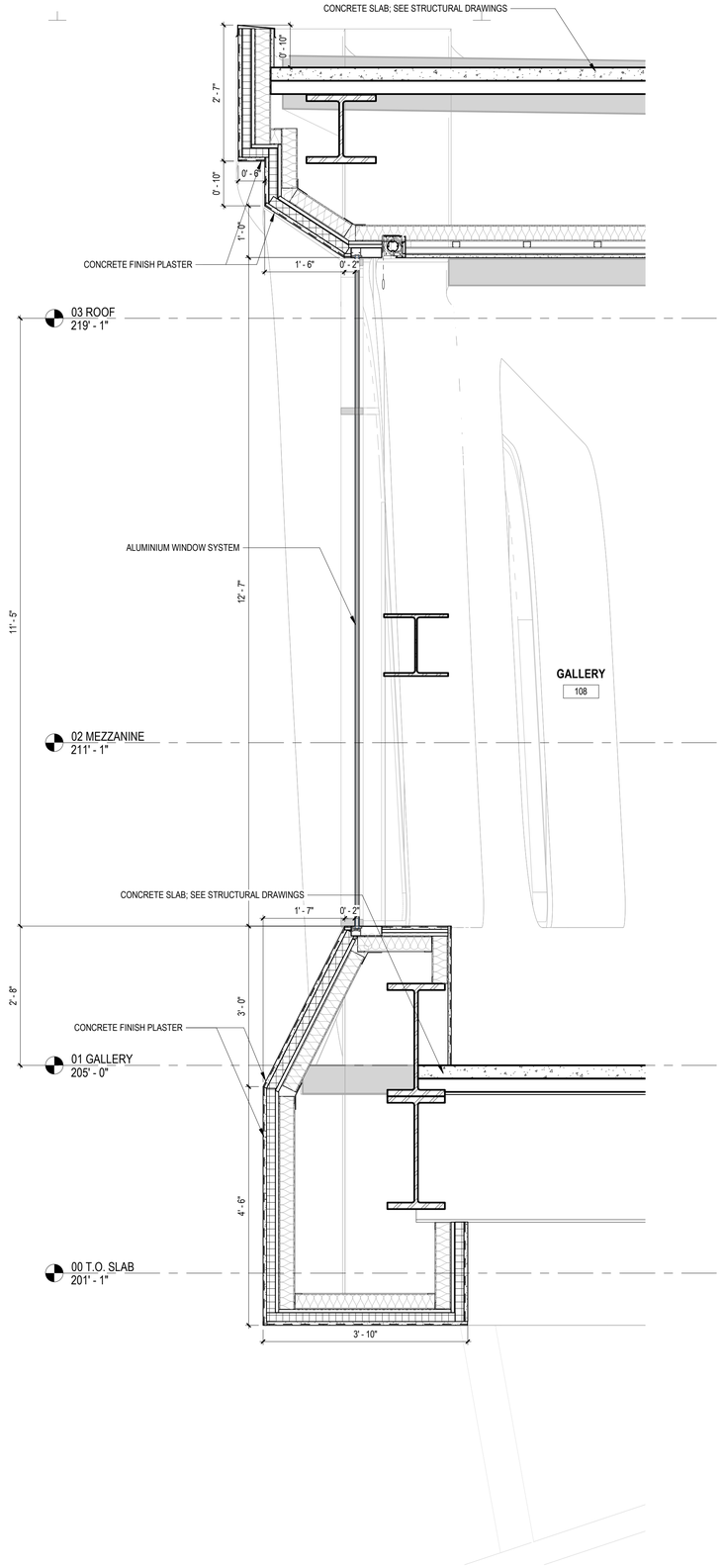

WALL SECTION 6-5 (GALLERY-E) 2

SCALE: 3/4" = 1'-0"

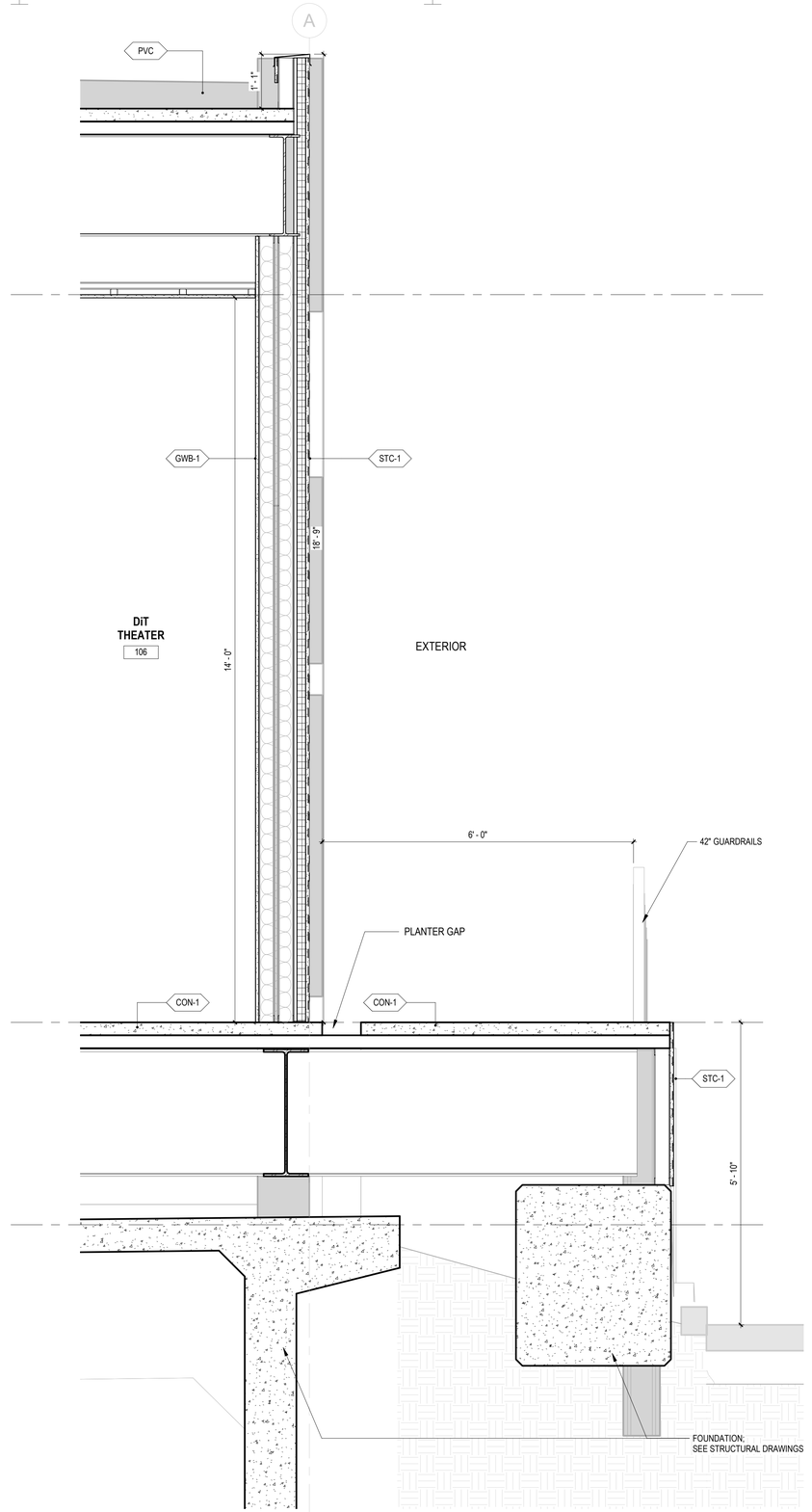

WALL SECTION 6-5 (DIT-W) 1

SCALE: 3/4" = 1'-0"

NOT FOR CONSTRUCTION

17.NOV.2021
100% DESIGN SUBMITTAL

ba
belzberg architects
2740 MAIN STREET
SANTA MONICA, CA 90405
310.453.9611
www.belzbergarchitects.com

#	DESCRIPTION	DATE

HOLOCAUST
MUSEUM LA
EXPANSION

100 THE GROVE DRIVE
LOS ANGELES, CA 90036

WALL SECTIONS

PROJECT NUMBER: 17009

A451

11/18/2021 11:56:39 AM

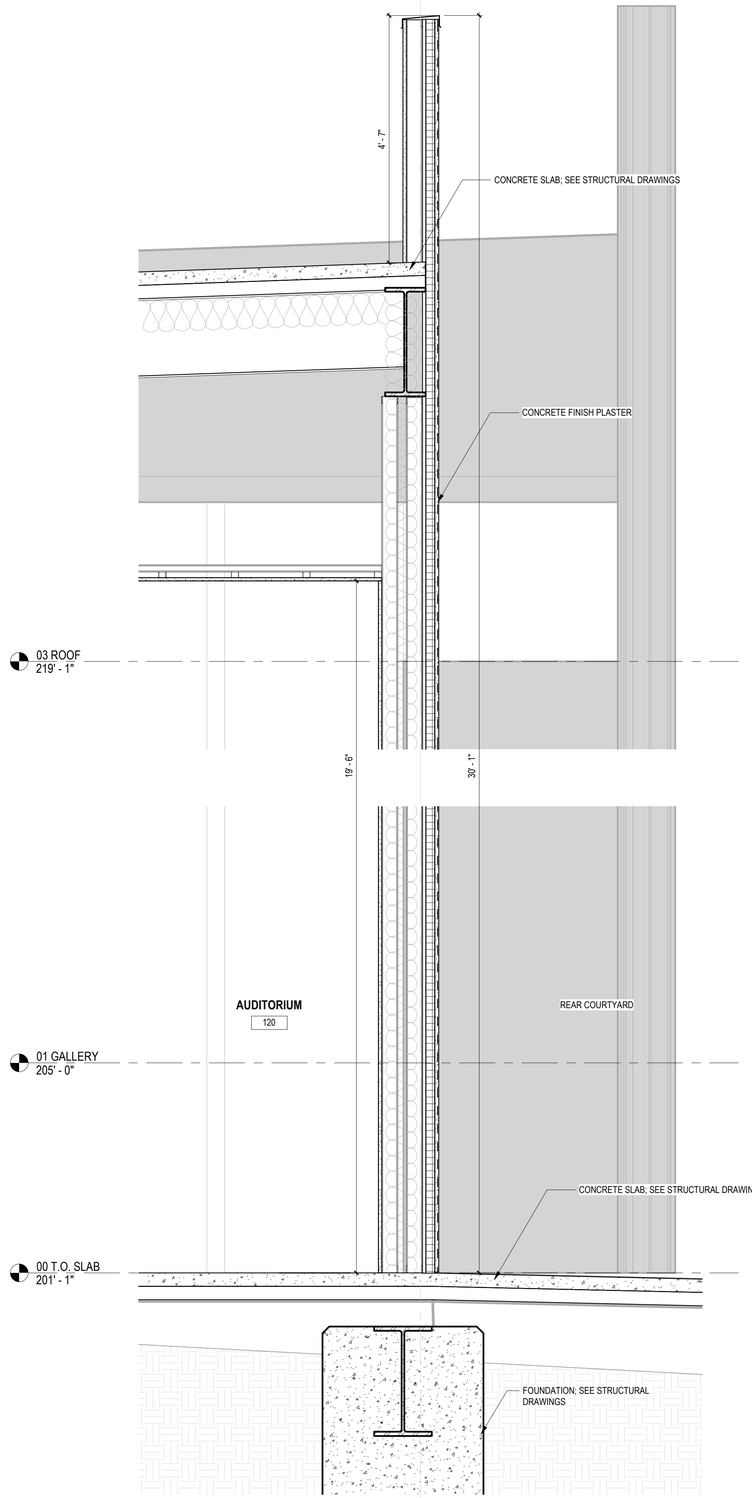

WALL SECTION B-C (AUDITORIUM-S) 2

SCALE: 3/4" = 1'-0"

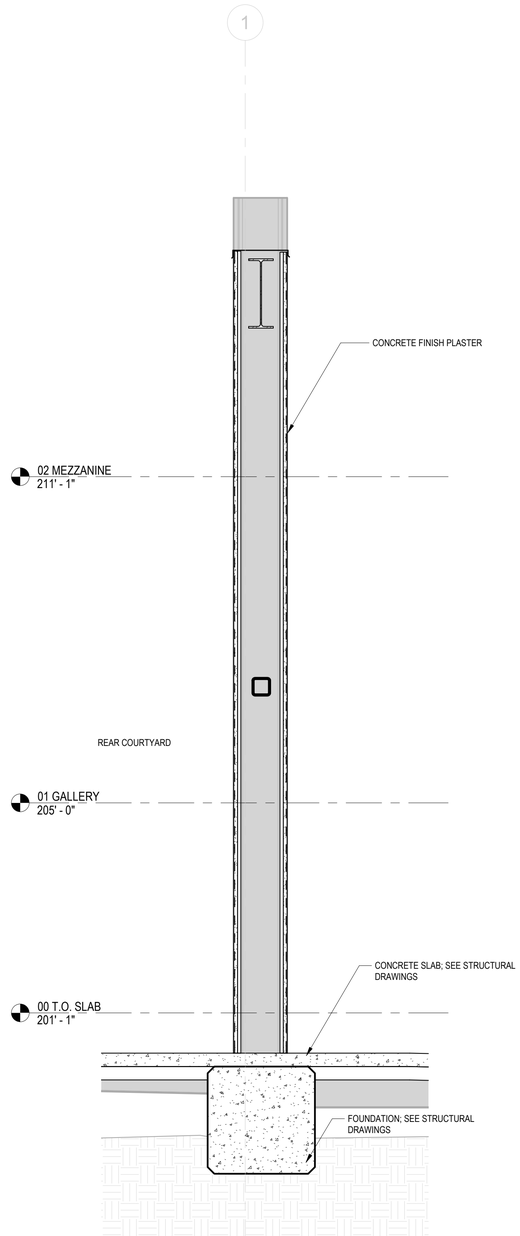

WALL SECTION B-C (MECH YARD-S) 1

SCALE: 3/4" = 1'-0"

NOT FOR CONSTRUCTION

17.NOV.2021
100% DESIGN SUBMITTAL

ba
belzberg architects
2740 MAIN STREET
SANTA MONICA, CA 90405
310.453.9611
www.belzbergarchitects.com

#	DESCRIPTION	DATE

HOLOCAUST MUSEUM LA EXPANSION

100 THE GROVE DRIVE
LOS ANGELES, CA 90036

WALL SECTIONS

PROJECT NUMBER: 17009

A452

11/18/2021 11:56:40 AM

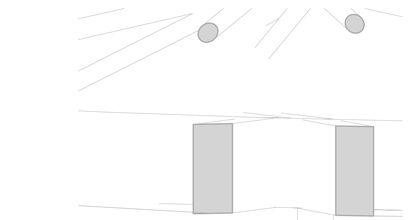

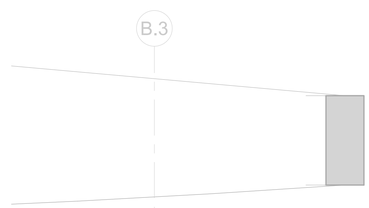

03 ROOF
219' - 1"

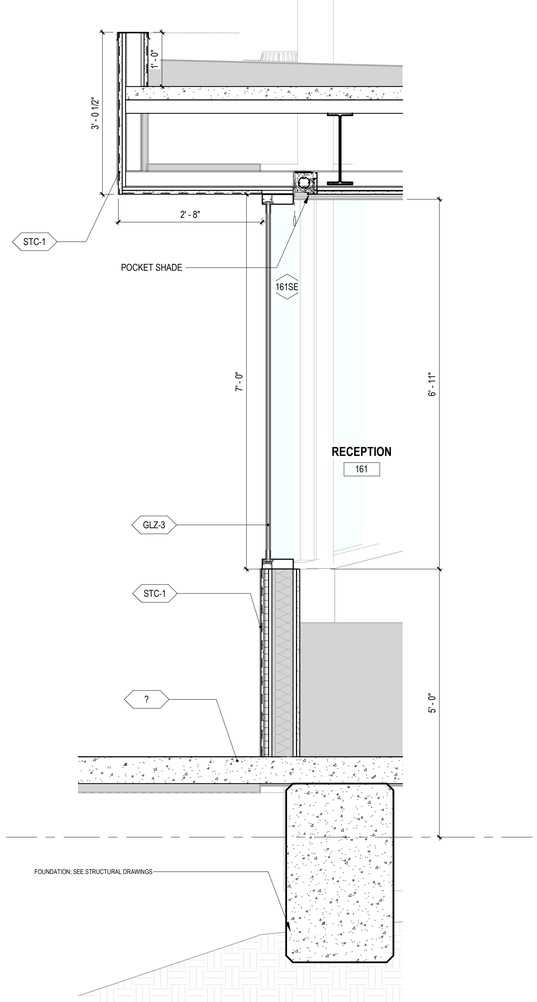

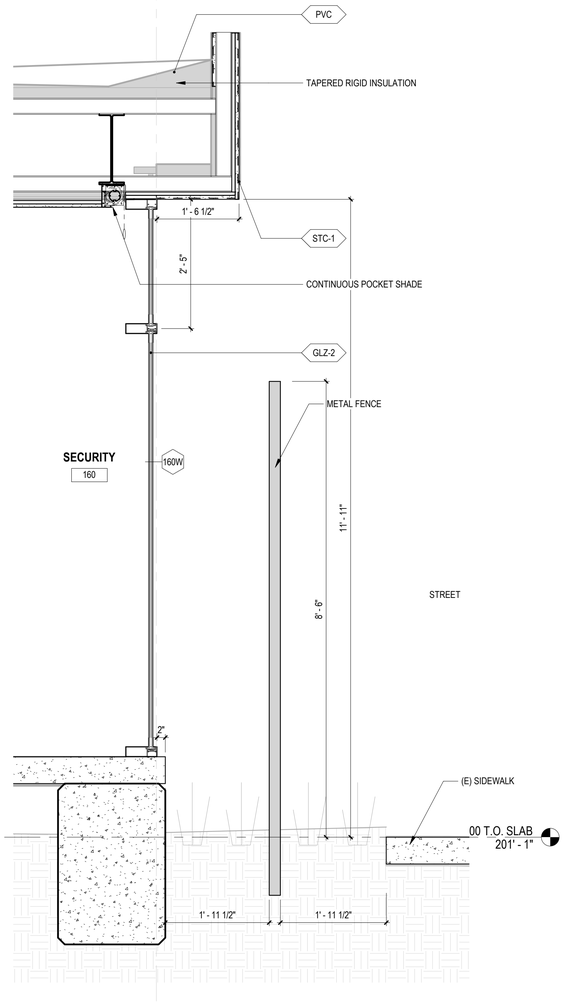

WALL SECTION 10-9 (ENTRY-E) 2
SCALE: 3/4" = 1'-0"

WALL SECTION 10-9 (ENTRY-W) 1
SCALE: 3/4" = 1'-0"

NOT FOR CONSTRUCTION

17.NOV.2021
100% DESIGN SUBMITTAL

ba
belzberg architects
2740 MAIN STREET
SANTA MONICA, CA 90405
310.453.9611
www.belzbergarchitects.com

#	DESCRIPTION	DATE

HOLOCAUST MUSEUM LA EXPANSION

100 THE GROVE DRIVE
LOS ANGELES, CA 90036

WALL SECTIONS - ENTRY PAVILION

PROJECT NUMBER: 17009

A453

11/19/2021 11:58:42 AM

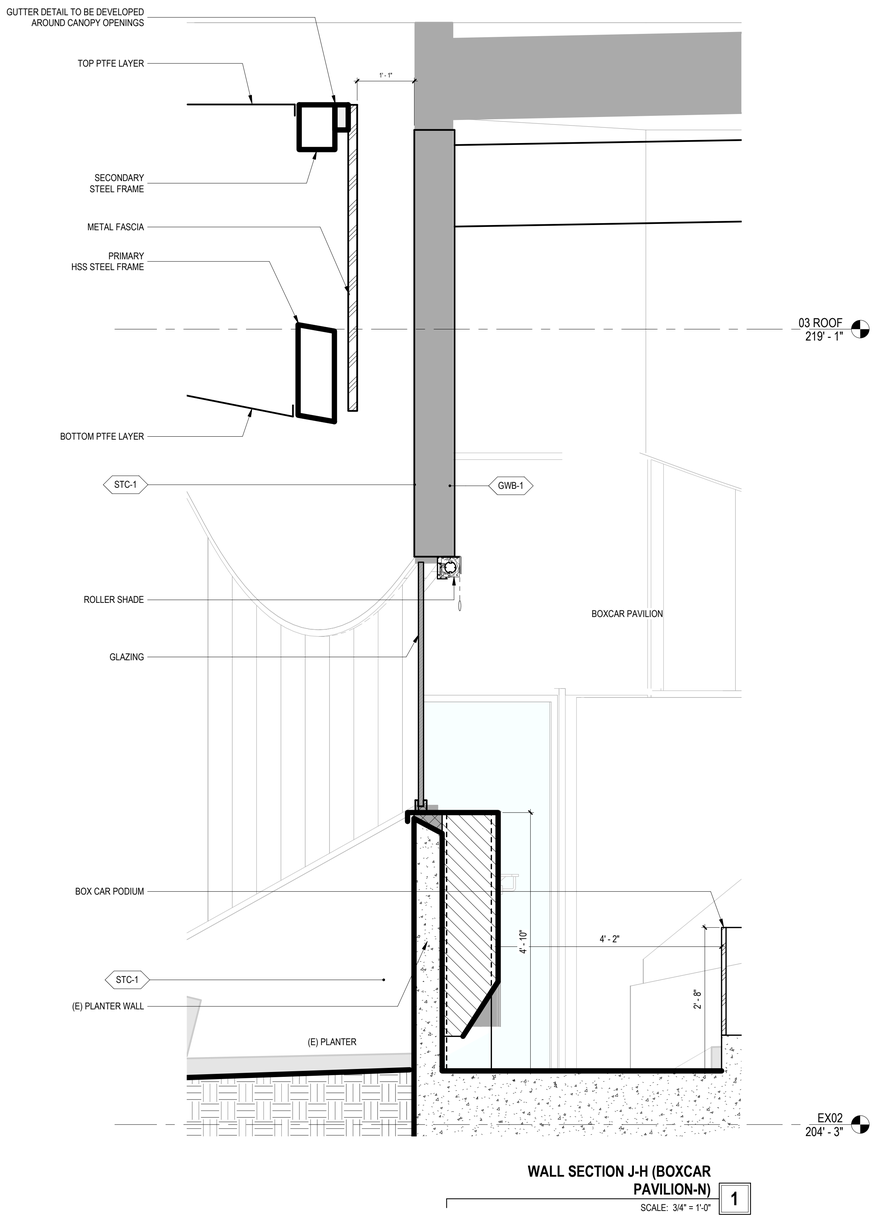

WALL SECTION J-H (BOXCAR PAVILION-N) 1

SCALE: 3/4" = 1'-0"

NOT FOR CONSTRUCTION

17.NOV.2021
100% DESIGN SUBMITTAL

ba
belzberg architects
2740 MAIN STREET
SANTA MONICA, CA 90405
310.453.9611
www.belzbergarchitects.com

#	DESCRIPTION	DATE

HOLOCAUST MUSEUM LA EXPANSION

100 THE GROVE DRIVE
LOS ANGELES, CA 90036

WALL SECTIONS - BOXCAR PAVILION

PROJECT NUMBER: 17009

A454

11/18/2021 11:56:43 AM

MATERIAL SCHEDULE

TYPE	DESCRIPTION	BASIS OF DESIGN PRODUCT		COMMENTS
		MANUFACTURER	MODEL	
ALU-1	ALUMINUM STOREFRONT	TBD		ANNODIZED FINISH, COLOR BY ARCHITECT
BRP	BALLISTIC RESISTANT PANELLING	RAY-BAR ENGINEERING CORP., OR APPROVED EQUAL	BALLISTIC RESISTANT PANELING - UL 752 LEVEL 8 / NIJ 111	ALT. ARMOR CORE LEVEL3 PANELS
CB	CEMENT BOARD SUBSTRATE FOR TILE	BY CONTRACTOR		
CMU-1	CONCRETE MASONRY UNITS	BY CONTRACTOR		
CON-1	CAST-IN-PLACE CONCRETE	BY CONTRACTOR		SMOOTH, POLISHED FINISH
CON-3	LIGHTWEIGHT CONCRETE TOPPING	BY CONTRACTOR		
CPT-1	LOW PILE CARPET TILE	FLOR OR APPROVED EQUAL		
CPT-2	CARPET, TBD			
FAB-1	FABRIC -WRAPPED FOAM PANEL			
GFRC	SMOOTH-TROWELED STUCCO	BY CONTRACTOR		COLOR/TEXTURE MATCH TO EXISTING MUSEUM CONCRETE
GLZ-1	TEMPERED, 1-1/4" INSULATED GLAZING UNIT W/ REFLECTIVE INTERLAYER			
GLZ-2	TEMPERED, LAMINATED, 5 MIN TAMPER GLAZING UNIT W/ REFLECTIVE INTERLAYER	ARCADIA, OR APPPROVED EQUAL	FDI05M	Ballistic-Thermal-T500BTX-OPG3005-ALL-Series
GLZ-3	TEMPERED, LAMINATED, 5 MIN TAMPER GLAZING UNIT W/ REFLECTIVE INTERLAYER	ARCADIA, OR APPPROVED EQUAL	FDI05M	Ballistic-Thermal-T500BTX-OPG3005-ALL-Series
GWB-1	GYPSUM WALL BOARD	BY CONTRACTOR		
MTL-1	BRAKE-FORMED GALV STEEL FLASHINGS & FASCIAS, PAINTED			SEE SECTION 057500 FOR DETAILS; PAINT TO MATCH STRUCTURAL STEEL FRAMING
P-104	CAST-IN-PLACE CONCRETE, EXPOSED AGGREGATE FINISH	BY CONTRACTOR		
PVC	CLASS-A KEE ROOFING MEMBRANE W/ COARSE GRAVEL	FIBERTITE	CR GRAY	PROVIDE ADD ALT FOR CUSTOM MADE-TO-ORDER COLOR. PROVIDE ADDITIONAL ADD ALT FOR GRAILCOAT AT ROOF
PWB-1	PLASTER WALL BOARD	STARSILENT	25MM SMOOTH	CEILING APPLICATIONS WHERE APPLICABLE.
STC-1	SMOOTH-TROWELED STUCCO	BY CONTRACTOR		COLOR/TEXTURE MATCH TO EXISTING MUSEUM CONCRETE
W-102	CAST-IN-PLACE CONCRETE	TRADEMARK OR EQUAL		
WD-1	WOOD FLOORING	TBD	7" WIDE PLANK ENGINEERED EUROPEAN WHITE OAK	

NOTES:

1. ALL QUANTITIES SHOWN ARE FOR REFERENCE ONLY. CONTRACTOR TO VERIFY ALL QUANTITIES AND MEASUREMENTS.

NOT FOR CONSTRUCTION

17.NOV.2021
100% DESIGN SUBMITTAL

ba
belzberg architects
2740 MAIN STREET
SANTA MONICA, CA 90405
310.453.9611
www.belzbergarchitects.com

#	DESCRIPTION	DATE
1	P.C. VERIF 1	12/10/2021

HOLOCAUST
MUSEUM LA
EXPANSION

100 THE GROVE DRIVE
LOS ANGELES, CA 90036

SCHEDULES

PROJECT NUMBER: 17009

A600

11/18/2021 11:26:44 AM

DOOR HARDWARE NOTES

1. ALL PIN-TYPE HINGES ACCESSIBLE FROM THE EXTERIOR SHALL HAVE NON REMOVABLE HINGE PINS. HINGES SHALL HAVE MIN. 1/4"Ø STEEL JAMB STUD WITH 1/4" MIN PROTECTION. STRIKE PLATE SHALL BE SECURED TO JAMBS WITH MIN 2.5" LENGTH SCREWS.

2. DEAD BOLTS SHALL HAVE HARDENED INSERTS, DEADLOCKING LATCH WITH KEY OPERATED LOCKS ON EXTERIOR. STRAIGHT DEAD BOLTS SHALL HAVE A MIN. THROW OF 1", EMBEDMENT OF NOT LESS THAN 5/8". HOOKSHAPED OR EXPANDING LUG DEADBLOTS SHALL HAVE A MIN THROW OF 3/4". DOOR KNOBS AND DEADBOLT THUMB TURNS SHALL NOT BE SEPARATED BY MORE THAN 8 INCHES.

3. SLIDING DOORS SHALL BE PROVIDED WITH A DEVICE IN THE UPPER CHANNEL TO PROHIBIT RAISING AND REMOVING OF THE PANEL IN THE CLOSED OR PARTIALLY OPEN POSITION. SLIDING GLASS DOORS SHALL BE EQUIPPED WITH LOCKING DEVICES TO REMAIN INTACT WHEN TESTED PER SEC 6717.1.

GLAZING NOTES

1. GLAZING IN THE FOLLOWING LOCATIONS SHALL BE SAFETY GLAZING CONFORMING TO THE HUMAN IMPACT LOADS OF SECTION R308.3:
A) FIXED AND OPERABLE PANELS OF SWINGING, SLIDING AND BIFOLD DOOR ASSEMBLIES.
B) GLAZING IN AN INDIVIDUAL FIXED OR OPERABLE PANEL ADJACENT TO A DOOR WHERE THE NEAREST VERTICAL EDGE IS WITHIN A 24" ARC OF THE DOOR IN A CLOSED POSITION AND WHOSE BOTTOM EDGE IS LESS THEN 60" ABOVE THE FLOOR OR WALKING SURFACE.
C) GLAZING IN AN INDIVIDUAL FIXED OR OPERTABLE PANEL THAT MEETS ALL OF THE FOLLOWING CONDITIONS:
   1. EXPOSED AREAS OF AN INDIVIDUAL PANE GREATER THAN 9 SQUARE FEET.
   2. BOTTOM EDGE LESS THAN 18" ABOVE THE FLOOR
   3. TOP EDGE GREATER THAN 36" ABOVE THE FLOOR
   4. ONE OR MORE WALKING SURFACES WITHIN 36" HORIZONTALLY OF THE GLAZING
D) GLAZING IN RAILINGS
E) GLAZING IN ENCLOSURES FOR OR WALLS FACING HOT TUBS, WHIRLPOOLS, SAUNAS, SETAM ROOMS, BATHRUBS AND SHOWERS WHERE THE BOTTOM EDGE OF THE GLAZING IS LESS THAN 60" MEASURED VERTICALLY ABOVE ANY STANDING OR WALKING SURFACE.

2. CONTRACTOR TO VERIFY IN FIELD ALL WINDOW & WINDOW WALL OPENINGS PRIOR TO FABRICATION

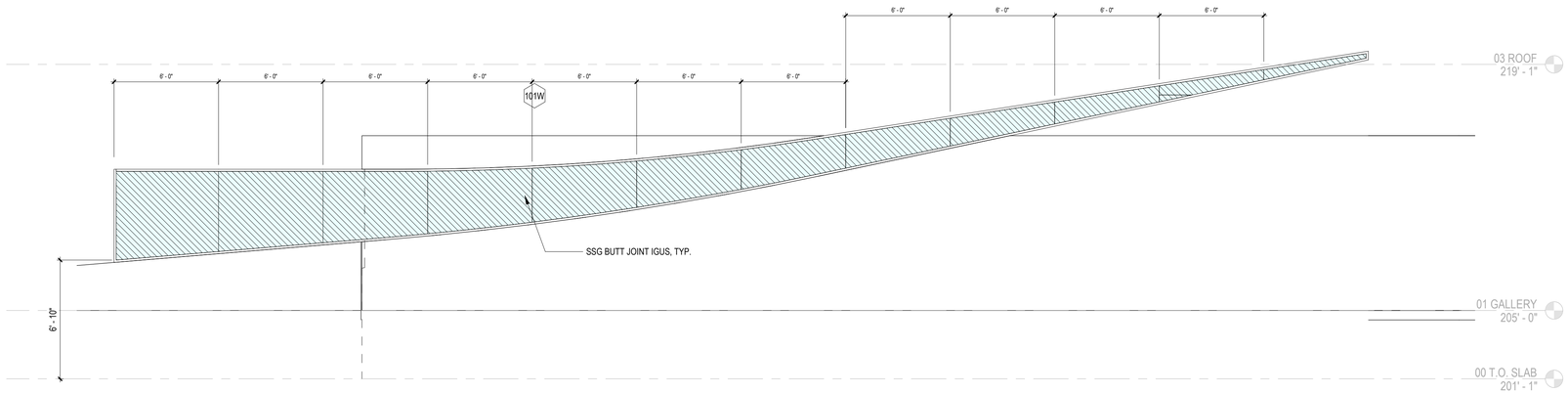

WWE - 101W GIFTSHOP 6
SCALE: 1/4" = 1'-0"

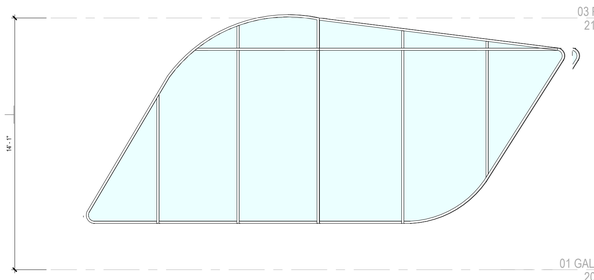

WWE - 108.4 GALLERY 5
SCALE: 1/4" = 1'-0"

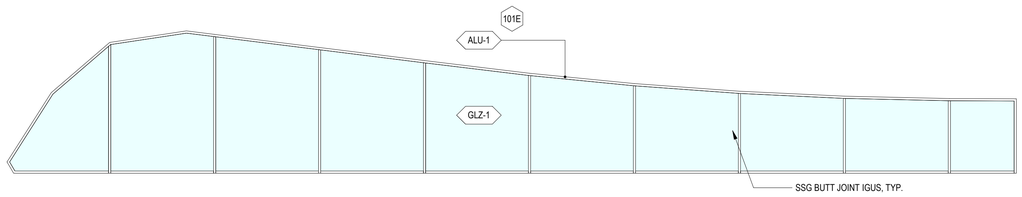

WWE - 101E GIFTSHOP 4
SCALE: 1/4" = 1'-0"

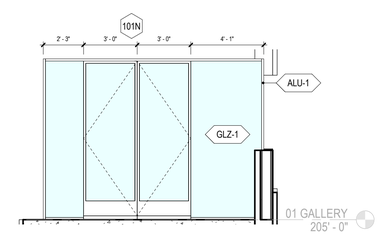

WWE - 101N GIFTSHOP 534
SCALE: 1/4" = 1'-0"

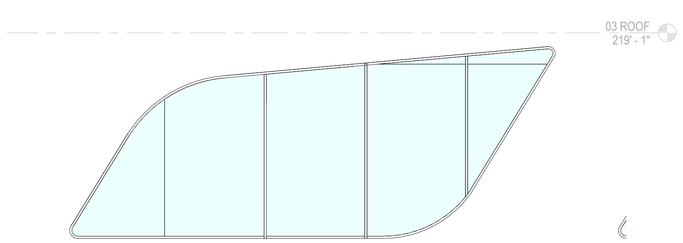

WWE - 108.2 GALLERY 2
SCALE: 1/4" = 1'-0"

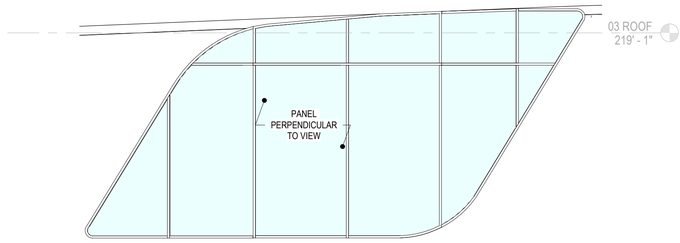

WWE - 108.3 GALLERY 1
SCALE: 1/4" = 1'-0"

NOT FOR CONSTRUCTION

17.NOV.2021
100% DESIGN SUBMITTAL

belzberg architects
2740 MAIN STREET
SANTA MONICA, CA 90405
310.453.9611
www.belzbergarchitects.com

#	DESCRIPTION	DATE

HOLOCAUST MUSEUM LA EXPANSION

100 THE GROVE DRIVE
LOS ANGELES, CA 90036

WINDOW WALL ELEVATIONS

PROJECT NUMBER: 17009

A610

11/18/2021 11:56:45 AM

DOOR HARDWARE NOTES

1. ALL PIN-TYPE HINGES ACCESSIBLE FROM THE EXTERIOR SHALL HAVE NON REMOVABLE HINGE PINS. HINGES SHALL HAVE MIN. 1/4"Ø STEEL JAMB STUD WITH 1/4" MIN PROTECTION. STRIKE PLATE SHALL BE SECURED TO JAMBS WITH MIN 2.5" LENGTH SCREWS.

2. DEAD BOLTS SHALL HAVE HARDENED INSERTS, DEADLOCKING LATCH WITH KEY OPERATED LOCKS ON EXTERIOR. STRAIGHT DEAD BOLTS SHALL HAVE A MIN. THROW OF 1", EMBEDMENT OF NOT LESS THAN 5/8". HOOKSHAPED OR EXPANDING LUG DEADBLOTS SHALL HAVE A MIN THROW OF 3/4". DOOR KNOBS AND DEADBOLT THUMB TURNS SHALL NOT BE SEPARATED BY MORE THAN 8 INCHES.

3. SLIDING DOORS SHALL BE PROVIDED WITH A DEVICE IN THE UPPER CHANNEL TO PROHIBIT RAISING AND REMOVING OF THE PANEL IN THE CLOSED OR PARTIALLY OPEN POSITION. SLIDING GLASS DOORS SHALL BE EQUIPPED WITH LOCKING DEVICES TO REMAIN INTACT WHEN TESTED PER SEC 6717.1.

GLAZING NOTES

1. GLAZING IN THE FOLLOWING LOCATIONS SHALL BE SAFETY GLAZING CONFORMING TO THE HUMAN IMPACT LOADS OF SECTION R308.3:
A) FIXED AND OPERABLE PANELS OF SWINGING, SLIDING AND BIFOLD DOOR ASSEMBLIES.
B) GLAZING IN AN INDIVIDUAL FIXED OR OPERABLE PANEL ADJACENT TO A DOOR WHERE THE NEAREST VERTICAL EDGE IS WITHIN A 24" ARC OF THE DOOR IN A CLOSED POSITION AND WHOSE BOTTOM EDGE IS LESS THEN 60" ABOVE THE FLOOR OR WALKING SURFACE.
C) GLAZING IN AN INDIVIDUAL FIXED OR OPERTABLE PANEL THAT MEETS ALL OF THE FOLLOWING CONDITIONS:
   1. EXPOSED AREAS OF AN INDIVIDUAL PANE GREATER THAN 9 SQUARE FEET.
   2. BOTTOM EDGE LESS THAN 18" ABOVE THE FLOOR
   3. TOP EDGE GREATER THAN 36" ABOVE THE FLOOR
   4. ONE OR MORE WALKING SURFACES WITHIN 36" HORIZONTALLY OF THE GLAZING
D) GLAZING IN RAILINGS
E) GLAZING IN ENCLOSURES FOR OR WALLS FACING HOT TUBS, WHIRLPOOLS, SAUNAS, SETAM ROOMS, BATHRUBS AND SHOWERS WHERE THE BOTTOM EDGE OF THE GLAZING IS LESS THAN 60" MEASURED VERTICALLY ABOVE ANY STANDING OR WALKING SURFACE.

2. CONTRACTOR TO VERIFY IN FIELD ALL WINDOW & WINDOW WALL OPENINGS PRIOR TO FABRICATION

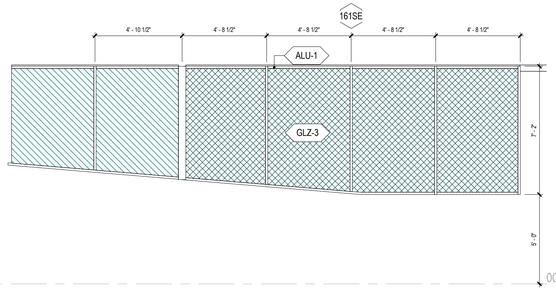

WWE - 161SE (SECURITY) 6
SCALE: 1/4" = 1'-0"

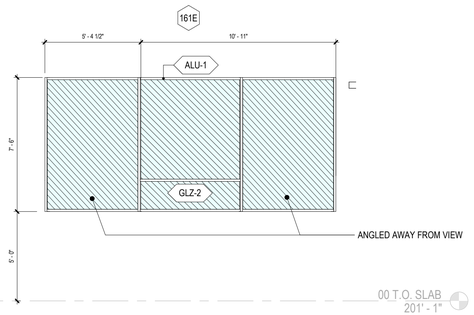

WWE - 161E (SECURITY) 5
SCALE: 1/4" = 1'-0"

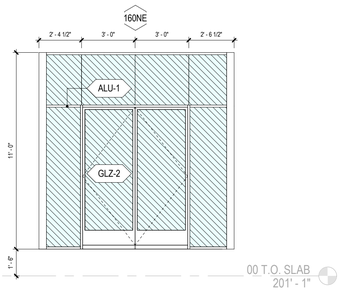

WWE - 161 NE (SECURITY) 4
SCALE: 1/4" = 1'-0"

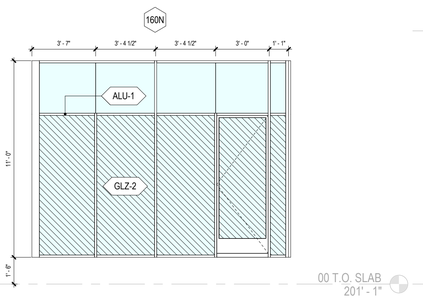

WWE - 160N (ENTRY) 3
SCALE: 1/4" = 1'-0"

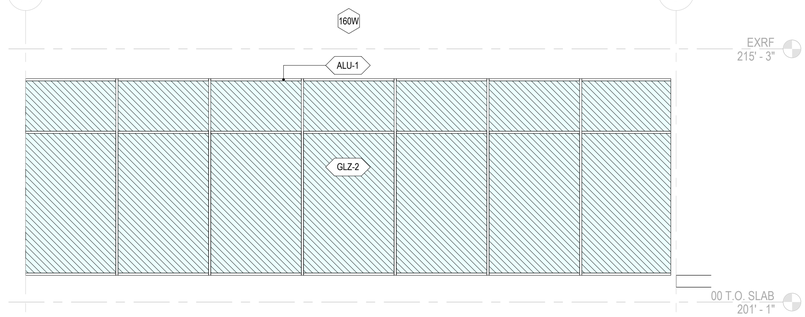

WWE - 161W (ENTRY) 2
SCALE: 1/4" = 1'-0"

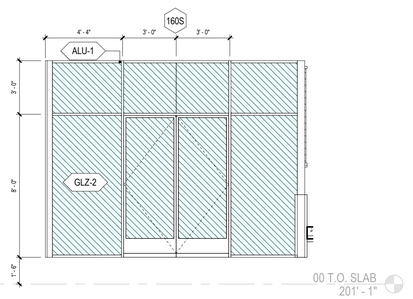

WWE - 161S (ENTRY) 1
SCALE: 1/4" = 1'-0"

NOT FOR CONSTRUCTION

17.NOV.2021
100% DESIGN SUBMITTAL

belzberg architects
2740 MAIN STREET
SANTA MONICA, CA 90405
310.453.9611
www.belzbergarchitects.com

#	DESCRIPTION	DATE

HOLOCAUST MUSEUM LA EXPANSION

100 THE GROVE DRIVE
LOS ANGELES, CA 90036

WINDOW WALL ELEVATIONS

PROJECT NUMBER: 17009

A611

11/18/2021 11:56:47 AM

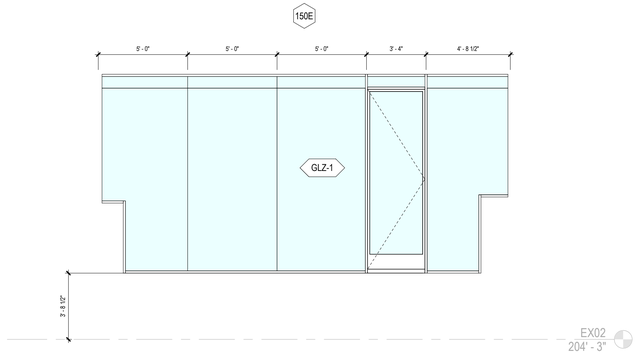

WWE - 150E (BOXCAR) 5

SCALE: 1/4" = 1'-0"

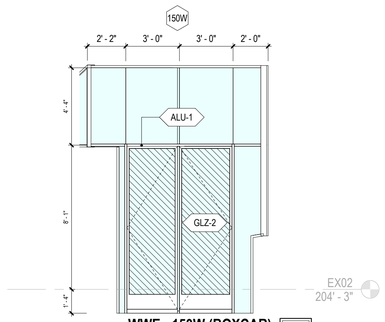

WWE - 150W (BOXCAR) 4

SCALE: 1/4" = 1'-0"

DOOR HARDWARE NOTES

1. ALL PIN-TYPE HINGES ACCESSIBLE FROM THE EXTERIOR SHALL HAVE NON REMOVABLE HINGE PINS. HINGES SHALL HAVE MIN. 1/4"Ø STEEL JAMB STUD WITH 1/4" MIN PROTECTION. STRIKE PLATE SHALL BE SECURED TO JAMBS WITH MIN 2.5" LENGTH SCREWS.

2. DEAD BOLTS SHALL HAVE HARDENED INSERTS, DEADLOCKING LATCH WITH KEY OPERATED LOCKS ON EXTERIOR. STRAIGHT DEAD BOLTS SHALL HAVE A MIN. THROW OF 1", EMBEDMENT OF NOT LESS THAN 5/8". HOOKSHAPED OR EXPANDING LUG DEADBLOTS SHALL HAVE A MIN THROW OF 3/4". DOOR KNOBS AND DEADBOLT THUMB TURNS SHALL NOT BE SEPARATED BY MORE THAN 8 INCHES.

3. SLIDING DOORS SHALL BE PROVIDED WITH A DEVICE IN THE UPPER CHANNEL TO PROHIBIT RAISING AND REMOVING OF THE PANEL IN THE CLOSED OR PARTIALLY OPEN POSITION. SLIDING GLASS DOORS SHALL BE EQUIPPED WITH LOCKING DEVICES TO REMAIN INTACT WHEN TESTED PER SEC 6717.1.

GLAZING NOTES

1. GLAZING IN THE FOLLOWING LOCATIONS SHALL BE SAFETY GLAZING CONFORMING TO THE HUMAN IMPACT LOADS OF SECTION R308.3:
A) FIXED AND OPERABLE PANELS OF SWINGING, SLIDING AND BIFOLD DOOR ASSEMBLIES.
B) GLAZING IN AN INDIVIDUAL FIXED OR OPERABLE PANEL ADJACENT TO A DOOR WHERE THE NEAREST VERTICAL EDGE IS WITHIN A 24" ARC OF THE DOOR IN A CLOSED POSITION AND WHOSE BOTTOM EDGE IS LESS THEN 60" ABOVE THE FLOOR OR WALKING SURFACE.
C) GLAZING IN AN INDIVIDUAL FIXED OR OPERTABLE PANEL THAT MEETS ALL OF THE FOLLOWING CONDITIONS:
   1. EXPOSED AREAS OF AN INDIVIDUAL PANE GREATER THAN 9 SQUARE FEET.
   2. BOTTOM EDGE LESS THAN 18" ABOVE THE FLOOR
   3. TOP EDGE GREATER THAN 36" ABOVE THE FLOOR
   4. ONE OR MORE WALKING SURFACES WITHIN 36" HORIZONTALLY OF THE GLAZING
D) GLAZING IN RAILINGS
E) GLAZING IN ENCLOSURES FOR OR WALLS FACING HOT TUBS, WHIRLPOOLS, SAUNAS, SETAM ROOMS, BATHRUBS AND SHOWERS WHERE THE BOTTOM EDGE OF THE GLAZING IS LESS THAN 60" MEASURED VERTICALLY ABOVE ANY STANDING OR WALKING SURFACE.

2. CONTRACTOR TO VERIFY IN FIELD ALL WINDOW & WINDOW WALL OPENINGS PRIOR TO FABRICATION

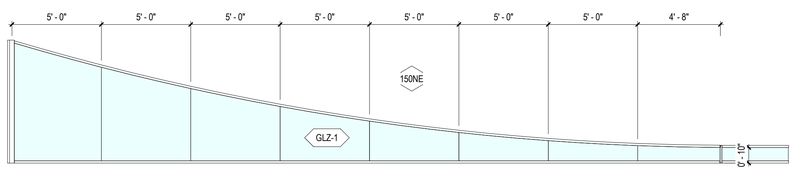

WWE - 150NE (BOXCAR) 3

SCALE: 1/4" = 1'-0"

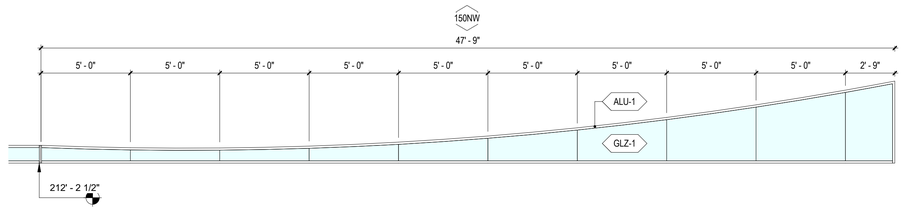

WWE - 150NW (BOXCAR) 2

SCALE: 1/4" = 1'-0"

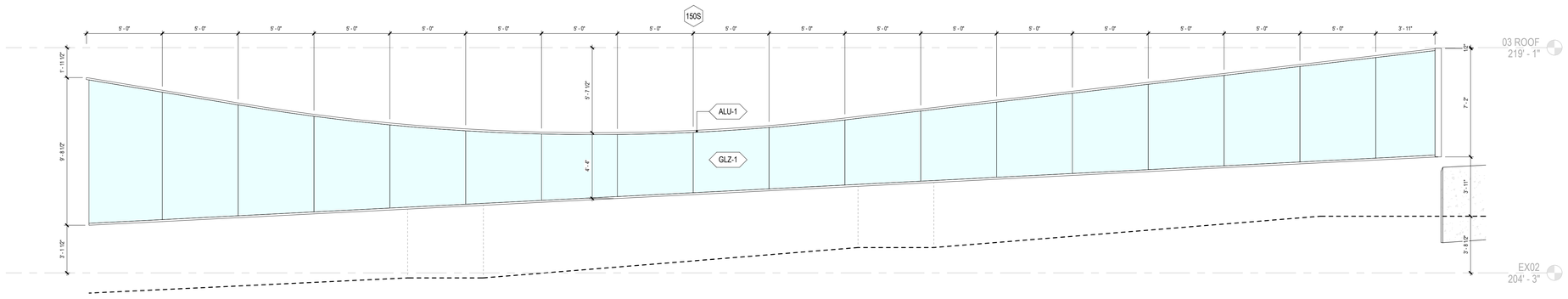

WWE - 150S (BOXCAR) 1

SCALE: 1/4" = 1'-0"

NOT FOR CONSTRUCTION

17.NOV.2021
100% DESIGN SUBMITTAL

ba
belzberg architects
2740 MAIN STREET
SANTA MONICA, CA 90405
310.453.9611
www.belzbergarchitects.com

#	DESCRIPTION	DATE

HOLOCAUST MUSEUM LA EXPANSION

100 THE GROVE DRIVE
LOS ANGELES, CA 90036

WINDOW WALL ELEVATIONS

PROJECT NUMBER: 17009

A612

11/18/2021 11:56:49 AM

DOOR SCHEDULE

DOOR #	FROM ROOM	TO ROOM	TYPE	WIDTH	HEIGHT	HW GROUP	DOOR TYPE	FRAME TYPE	COMMENTS
102	RR VESTIBULE	GIFT SHOP	B	5' - 0"	10' - 0"				
103	RR VESTIBULE	RR (U)	C	3' - 0"	8' - 0"		SOLID CORE, PAINT FINISH		
104	RR VESTIBULE	RR (W)	C	3' - 0"	8' - 0"		SOLID CORE, PAINT FINISH		
105	RR(M)	RR VESTIBULE	C	3' - 0"	8' - 0"		SOLID CORE, PAINT FINISH		
106.1		DIT THEATER	C	3' - 0"	8' - 0"		SOLID CORE, PAINT FINISH		
107.1	OFFICE	CLASSROOM B	C	3' - 0"	8' - 0"		SOLID CORE, PAINT FINISH		
108.1	COURTYARD	GIFT SHOP	A	3' - 0"	8' - 10 1/2"		GLZ-1		
108.2	COURTYARD	GIFT SHOP	A	3' - 0"	8' - 10 1/2"		GLZ-1		
108.3		GALLERY	SINGLE FLUSH, JAMB REVEAL	4' - 0"	10' - 0"				
108.4	GALLERY	VESTIBULE	B	5' - 0"	10' - 0"				
108A	GIFT SHOP	GALLERY	A	2' - 11 1/2"	8' - 4"				
108B	GIFT SHOP	GALLERY	A	2' - 11 1/2"	8' - 4"				
109	CLASSROOM A	VESTIBULE	C	3' - 0"	8' - 0"		SOLID CORE, PAINT FINISH		
110	VESTIBULE	CLASSROOM B	C	3' - 0"	8' - 0"		SOLID CORE, PAINT FINISH		
111		STORAGE	C	3' - 0"	7' - 0"				
120.1	AUDITORIUM	CORRIDOR SE		4' - 0"	8' - 0"		METAL CORE, PAINT FINISH		RATED, 5-MINUTE FORCED ENTRY RESISTANT, STC55 MIN
120.2	AUDITORIUM	CORRIDOR SW	C	3' - 0"	8' - 0"		METAL CORE, PAINT FINISH		RATED, 5-MINUTE FORCED ENTRY RESISTANT, STC55 MIN
120.3	BACKSTAGE	AUDITORIUM	C	3' - 0"	8' - 0"				
120.4	BACKSTAGE	AUDITORIUM	C	3' - 0"	8' - 0"				
120.5	AUDITORIUM	AUDITORIUM		2' - 6"	7' - 0"				
121.1	CORRIDOR SW	SERVICE AREA	C	3' - 0"	8' - 0"		METAL CORE, PAINT FINISH		RATED, 5-MINUTE FORCED ENTRY RESISTANT
121.2	CLASSROOM A	CORRIDOR SW	C	3' - 0"	8' - 0"		SOLID CORE, PAINT FINISH		
122.1	SERVICE AREA	CORRIDOR SE	D	7' - 0"	8' - 0"		METAL CORE, PAINT FINISH		RATED, 5-MINUTE FORCED ENTRY RESISTANT
122.2	GALLERY	CORRIDOR SE	D	7' - 0"	8' - 0"		SOLID CORE, PAINT FINISH		RATED
123	SERVICE AREA	BACKSTAGE	C	3' - 0"	8' - 0"				RATED, 5-MINUTE FORCED ENTRY RESISTANT
124	SERVICE AREA	STORAGE	F	9' - 7"	9' - 0"				
125	BACKSTAGE	GRN RM	C	3' - 0"	8' - 0"				
126	GRN RM	RR	C	3' - 0"	8' - 0"				
130.1	STORAGE								
130.2	STORAGE	IT	C	3' - 0"	8' - 0"				
131.1	SERVICE AREA		C	3' - 0"	8' - 0"		HOLLOW METAL CORE, PAINT FINISH		
131.2	SERVICE AREA		D	7' - 0"	8' - 0"		HOLLOW METAL CORE, PAINT FINISH		
150.1.1	COURTYARD	BOX CAR PAVILION	A	2' - 11 1/2"	9' - 4"		GLZ-1		
150.1.2	COURTYARD	BOX CAR PAVILION	A	2' - 10"	9' - 4"		GLZ-1		
150.2	BOX CAR PAVILION	REFLECTION GARDEN	A	3' - 6"	8' - 0"		GLZ-1		
150.3		BOX CAR PAVILION	A	3' - 2 1/2"	10' - 3 1/2"		GLZ-1		
160.1		SECURITY	A	2' - 11 1/2"	7' - 11 1/2"		GLZ-1		
160.2		SECURITY	A	2' - 11 1/2"	7' - 11 1/2"				
160.2.1	SECURITY	COURTYARD	A	2' - 11"	7' - 11 1/2"		GLZ-1		
160.2.2	SECURITY	COURTYARD	A	2' - 11 1/2"	7' - 11 1/2"		GLZ-1		
160.3	SECURITY	COURTYARD	A	2' - 10 1/2"	7' - 11 1/2"		GLZ-1		
161	RECEPTION	SECURITY	A	2' - 10 1/2"	7' - 11 1/2"		GLZ-1		
201		PROJECTOR ROOM	C	3' - 0"	8' - 0"		SOLID CORE, PAINT FINISH		

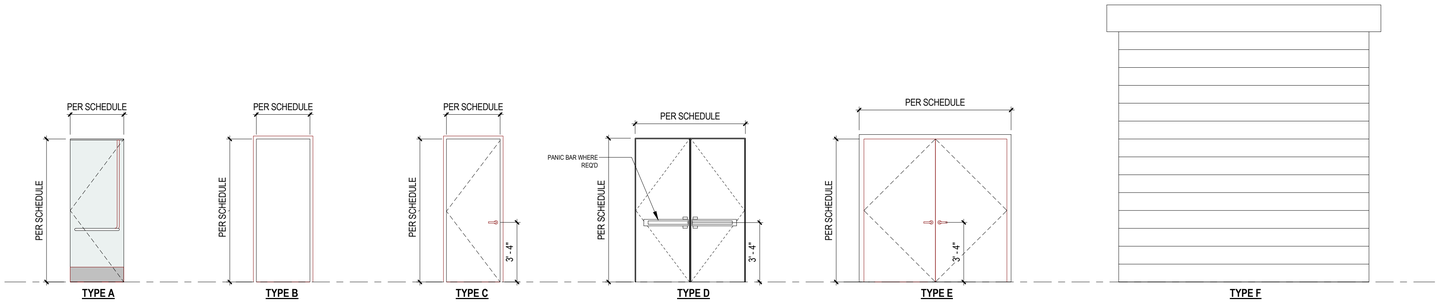

DOOR HARDWARE NOTES

1. ALL PIN-TYPE HINGES ACCESSIBLE FROM THE EXTERIOR SHALL HAVE NON REMOVABLE HINGE PINS. HINGES SHALL HAVE MIN. 1/4"Ø STEEL JAMB STUD WITH 1/4" MIN PROTECTION. STRIKE PLATE SHALL BE SECURED TO JAMBS WITH MIN 2.5" LENGTH SCREWS.

2. DEAD BOLTS SHALL HAVE HARDENED INSERTS, DEADLOCKING LATCH WITH KEY OPERATED LOCKS ON EXTERIOR. STRAIGHT DEAD BOLTS SHALL HAVE A MIN. THROW OF 1", EMBEDMENT OF NOT LESS THAN 5/8". HOOKSHAPED OR EXPANDING LUG DEADBLOTS SHALL HAVE A MIN THROW OF 3/4". DOOR KNOBS AND DEADBOLT THUMB TURNS SHALL NOT BE SEPARATED BY MORE THAN 8 INCHES.

3. SLIDING DOORS SHALL BE PROVIDED WITH A DEVICE IN THE UPPER CHANNEL TO PROHIBIT RAISING AND REMOVING OF THE PANEL IN THE CLOSED OR PARTIALLY OPEN POSITION. SLIDING GLASS DOORS SHALL BE EQUIPPED WITH LOCKING DEVICES TO REMAIN INTACT WHEN TESTED PER SEC 6717.1.

GLAZING NOTES

1. GLAZING IN THE FOLLOWING LOCATIONS SHALL BE SAFETY GLAZING CONFORMING TO THE HUMAN IMPACT LOADS OF SECTION R308.3:
A) FIXED AND OPERABLE PANELS OF SWINGING, SLIDING AND BIFOLD DOOR ASSEMBLIES.
B) GLAZING IN AN INDIVIDUAL FIXED OR OPERABLE PANEL ADJACENT TO A DOOR WHERE THE NEAREST VERTICAL EDGE IS WITHIN A 24" ARC OF THE DOOR IN A CLOSED POSITION AND WHOSE BOTTOM EDGE IS LESS THEN 60" ABOVE THE FLOOR OR WALKING SURFACE.
C) GLAZING IN AN INDIVIDUAL FIXED OR OPERTABLE PANEL THAT MEETS ALL OF THE FOLLOWING CONDITIONS:
   1. EXPOSED AREAS OF AN INDIVIDUAL PANE GREATER THAN 9 SQUARE FEET.
   2. BOTTOM EDGE LESS THAN 18" ABOVE THE FLOOR
   3. TOP EDGE GREATER THAN 36" ABOVE THE FLOOR
   4. ONE OR MORE WALKING SURFACES WITHIN 36" HORIZONTALLY OF THE GLAZING
D) GLAZING IN RAILINGS
E) GLAZING IN ENCLOSURES FOR OR WALLS FACING HOT TUBS, WHIRLPOOLS, SAUNAS, SETAM ROOMS, BATHRUBS AND SHOWERS WHERE THE BOTTOM EDGE OF THE GLAZING IS LESS THAN 60" MEASURED VERTICALLY ABOVE ANY STANDING OR WALKING SURFACE.

2. CONTRACTOR TO VERIFY IN FIELD ALL WINDOW & WINDOW WALL OPENINGS PRIOR TO FABRICATION

NOT FOR CONSTRUCTION

17.NOV.2021
100% DESIGN SUBMITTAL

ba
belzberg architects
2740 MAIN STREET
SANTA MONICA, CA 90405
310.453.9611
www.belzbergarchitects.com

#	DESCRIPTION	DATE

HOLOCAUST MUSEUM LA EXPANSION

100 THE GROVE DRIVE
LOS ANGELES, CA 90036

DOOR SCHEDULE

PROJECT NUMBER: 17009

A620

11/18/2021 11:35:51 AM

WALL CORE TYPES

TYPE	DESCRIPTION
A	8" ARCHITECTURAL CAST-IN-PLACE CONCRETE
B	10" CAST-IN-PLACE CONCRETE
C	8" CMU, SEE STRUCTURAL
D	NOT USED
E	NOT USED
F	NOT USED
G	NOT USED
2	7/8" FURRING STRIPS
3	MOVEABLE PARTITION
4	3-5/8" METAL STUDS @ 16" O.C.
5	5-1/2" METAL STUDS @ 16" O.C.
6	NOT USED
7	8" METAL STUDS @ 16" O.C.
8	3-5/8" DOUBLE STUD W/ 1/2" AIR GAP @ 16" O.C. (7-3/4" TOTAL DEPTH)

WALL TYPE NOTES

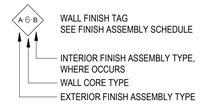

EXAMPLES

"A6B" IS TYPE "6" CORE (2X6 STUDS), WITH TYPE "A" EXTERIOR FINISH AND TYPE "B" INTERIOR FINISH

"CBC" IS TYPE "B" CORE (10" CONCRETE), WITH TYPE "C" FINISH BOTH SIDES

"DA" IS TYPE "A" CORE (8" CONCRETE) WITH TYPE "B" FINISH ON EXTERIOR (NO INTERIOR FINISH)

WALL FINISH ASSEMBLY TYPES

TYPE	DESCRIPTION
	INTERIOR ASSEMBLIES
A	5/8" GYP BOARD WITH LEVEL 5 FINISH; MOISTURE-RESISTANT IN WET AREAS, TYPE X AT OCC SEP
B	5/8" GYP BOARD WITH LEVEL 5 FINISH; OVER 1/2" PLYWOOD; TYPE X AT OCC SEP
B2	DOUBLE 5/8" GYP BOARD WITH LEVEL 5 FINISH OVER 1/2" PLYWOOD, TYPE X AT OCC SEP
C	25MM SOUND ABSORBING SMOOTH PLASTER FINISH O/ 20GA 7/8" FRAMING CHANNELS O/ 3/8" MIN AIR GAP
D	5/8" GYP BOARD WITH LEVEL 5 FINISH; OVER 1/2" PLYWOOD; OVER BALLISTIC PANELS (UP TO 78" AFF); TYPE X AT OCC SEP
D2	DOUBLE 5/8" GYP BOARD WITH LEVEL 5 FINISH; OVER 1/2" PLYWOOD; OVER BALLISTIC PANELS (UP TO 78" AFF); TYPE X AT OCC SEP
E	NOT USED
F	NOT USED
G	NOT USED
H	FABRIC / WOOD PANELLING
I	NOT USED
J	ALUMINUM COMPOSITE CLADDING, ROUTE & RETURN DRY SEAL JOINTS, ON 1/2" PLYWOOD. ANODIZED FINISH, COLOR BY ARCHITECT.
K	TILE ON THINSET MORTAR OVER CEMENT BOARD
L	NOT USED
M	NOT USED
N	NOT USED
O	NOT USED
	EXTERIOR ASSEMBLIES
P	1/2" PLYWOOD SHEATHING ONLY (NO FINISH)
Q	SMOOTH TROWEL STUCCO PARGE COAT
R	FLUID-APPLIED WATEPROOF MEMBRANE AND DRAINAGE COMPOSITE (BELOW GRADE)
S	3-COAT SMOOTH TROWEL STUCCO PLASTER AND LATH, 1/4" SPUN FIBER RAINSCREEN DRAINAGE CHANNEL, WEATHER BARRIER, ON 1/2" PLYWOOD
T	PRECAST CONCRETE PANELS ON HIDDEN CLEATS, OVER WEATHER BARRIER
U	NOT USED
V	NOT USED

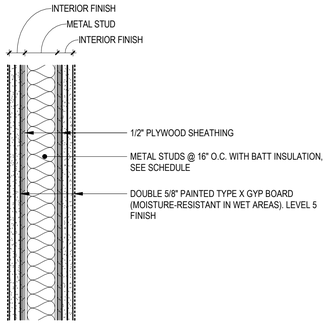

TYP. INTERIOR GWB WALL 6
SCALE: 1 1/2" = 1'-0"

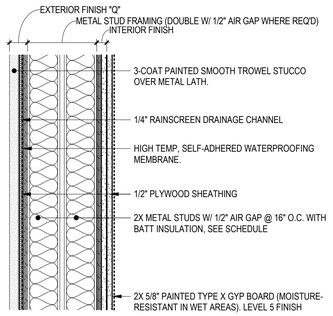

TYP. EXTERIOR STUCCO WALL 2
SCALE: 1 1/2" = 1'-0"

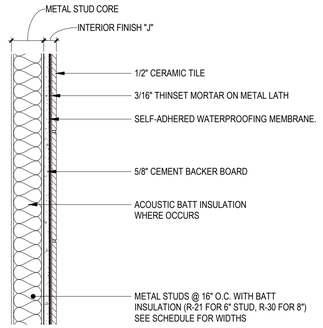

TYP. INTERIOR CERAMIC TILE 9
SCALE: 1 1/2" = 1'-0"

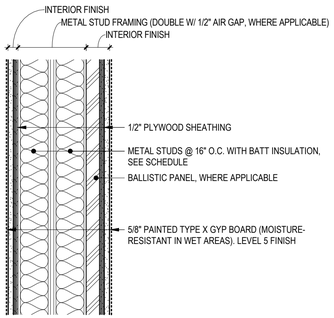

TYP. INTERIOR GWB WALL W/ BALLISTIC PANELLING 5
SCALE: 1 1/2" = 1'-0"

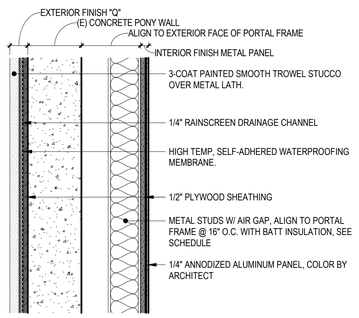

TYP. EXTERIOR STUCCO WALL O/ (E) CONC WALL 3
SCALE: 1 1/2" = 1'-0"

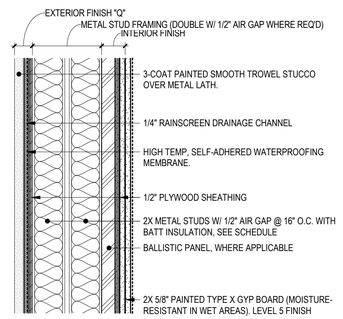

TYP. EXTERIOR STUCCO WALL W/ BALLISTIC PANELLING 1
SCALE: 1 1/2" = 1'-0"

NOT FOR CONSTRUCTION

17.NOV.2021
100% DESIGN SUBMITTAL

ba
belzberg architects
2740 MAIN STREET
SANTA MONICA, CA 90405
310.453.9611
www.belzbergarchitects.com

#	DESCRIPTION	DATE

HOLOCAUST MUSEUM LA EXPANSION

100 THE GROVE DRIVE
LOS ANGELES, CA 90036

WALL AND CEILING TYPES

PROJECT NUMBER: 17009

A650

11/18/2021 11:56:32 AM

STRUCTURAL DRAWING LIST	
S000	DRAWING LIST
S001	GENERAL NOTES
S002	GENERAL NOTES
S003	GENERAL NOTES
S004	STATEMENT OF SPECIAL INSPECTIONS
S005	MOMENT FRAME DETAILS - LADBS QUALITY ASSURANCE SHEET 1 OF 3
S006	MOMENT FRAME DETAILS - LADBS QUALITY ASSURANCE SHEET 2 OF 3
S007	MOMENT FRAME DETAILS - LADBS QUALITY ASSURANCE SHEET 3 OF 3
S008	STRUCTURAL OBSERVATION REQUIREMENTS
S201	OVERALL FOUNDATION PLAN
S201A	LEARNING CENTER FOUNDATION PLAN - SOUTH
S201B	LEARNING CENTER FOUNDATION PLAN - NORTH
S201C	ENTRY PAVILION/BOXCAR PAVILION FOUNDATION PLAN
S211	OVERALL GROUND FLOOR PLAN
S211A	LEARNING CENTER GROUND FLOOR PLAN - SOUTH
S211B	LEARNING CENTER GROUND FLOOR PLAN - NORTH
S211C	ENTRY PAVILION/BOXCAR PAVILION GROUND FLOOR PLAN
S211L	OVERALL GROUND FLOOR PLAN - LOADING
S221	OVERALL ROOF PLAN
S221A	LEARNING CENTER ROOF PLAN - SOUTH
S221B	LEARNING CENTER ROOF PLAN - NORTH
S221C	ENTRY PAVILION/BOXCAR PAVILION ROOF PLAN
S221L	OVERALL ROOF PLAN - LOADING
S227	CANOPY ROOF FRAMING PLAN
S301	LEARNING CENTER TRUSS ELEVATION
S311	LEARNING CENTER STRUCTURAL MOMENT FRAME ELEVATIONS
S312	LEARNING CENTER STRUCTURAL BRACED FRAME ELEVATIONS
S313	ENTRY PAVILION STRUCTURAL MOMENT FRAME ELEVATIONS
S323	BOX CAR PAVILION SPECIAL MOMENT FRAME ELEVATIONS
S331	LEARNING CENTER AUDITORIUM SECTIONS
S332	BOX CAR AND CANOPY ELEVATIONS
S333	CANOPY ELEVATIONS
S610	STRUCTURAL PILE DETAILS
S611	STRUCTURAL PILE CAP DETAILS
S612	STRUCTURAL PILE CAP DETAILS
S620	REINFORCED SCHEDULE LAP AND DEVELOPMENT LENGTH SCHEDULE
S621	REINFORCED SCHEDULE LAP AND DEVELOPMENT LENGTH SCHEDULE
S622	TYPICAL SLAB ON GRADE DETAILS
S623	TYPICAL SLAB ON GRADE DETAILS
S624	TYPICAL CONCRETE DETAILS
S625	TYPICAL CONCRETE DETAILS
S626	TYPICAL CONCRETE DETAILS
S630	TYPICAL STEEL DETAILS
S631	TYPICAL STEEL DETAILS
S632	TYPICAL STEEL DETAILS
S633	TYPICAL STEEL DETAILS
S634	TYPICAL STEEL DETAILS
S635	TYPICAL STEEL DETAILS
S636	TYPICAL STEEL DETAILS
S637	TYPICAL STEEL DETAILS
S638	SPECIAL MOMENT FRAME DETAILS
S640	SFRS STEEL SPECIAL CONCENTRIC BRACED FRAME DETAILS
S650	TYPICAL METAL DECK DETAILS
S651	TYPICAL METAL DECK DETAILS
S652	TYPICAL METAL DECK DETAILS
S653	TYPICAL METAL DECK DETAILS
S654	TYPICAL METAL DECK DETAILS
S655	TYPICAL METAL DECK DETAILS

NOT FOR CONSTRUCTION

09.AUG.21

belzberg architects

2321 MAIN STREET
SANTA MONICA, CA 90405
310.453.9611

www.belzbergarchitects.com

ARUP

Arup North America Ltd.
900 Wilshire Boulevard,
19th Floor
Los Angeles CA 90017
Tel: 310 578 4400
www.arup.com

#	DESCRIPTION	DATE

DRAWING LIST

PROJECT NUMBER:

S000

8/10/2021 5:29:07 PM

TEMPORARY WORK

1. ALL TEMPORARY WORK SHALL BE DESIGNED, INSTALLED AND CARRIED OUT BY THE CONTRACTOR IN ACCORDANCE WITH THE REQUIREMENTS OF THE PROJECT GOVERNING CODE(S).
2. THE DRAWINGS INDICATE THE COMPLETED STRUCTURE. THE CONTRACTOR IS FULLY RESPONSIBLE FOR ALL TEMPORARY MEASURES NECESSARY FOR ERECTION.
3. IT IS THE RESPONSIBILITY OF THE CONTRACTOR TO PROVIDE PROPER SHORING AND BRACING WHEREVER NECESSARY. ALL TEMPORARY SHORING/BRACING SHALL BE DESIGNED BY A CIVIL AND/OR STRUCTURAL ENGINEER REGISTERED IN CALIFORNIA.
4. THE CONTRACTOR IS RESPONSIBLE FOR SUBMITTING THE SHORING DRAWINGS AND CALCULATIONS TO THE AUTHORITY HAVING JURISDICTION AS REQUIRED.
5. CONSTRUCTION LOADS OR TEMPORARY LOADS SHALL NOT EXCEED THE DESIGN LIVE LOADS PER SQUARE FOOT AS SHOWN ON THE DRAWINGS. PROVIDE SHORING AND/OR BRACING WHERE THE STRUCTURE HAS NOT ATTAINED ITS DESIGN STRENGTH.

CONCRETE

1. STRUCTURAL CONCRETE STRENGTHS AND TYPES USED IN THIS PROJECT SHALL BE AS FOLLOWS, UNLESS NOTED OTHERWISE:

LOCATION IN STRUCTURE	f'c	DENSITY
FOUNDATIONS INCLUDING BUT NOT LIMITED TO BORED PILES, PILE CAPS, GRADE BEAMS, TIE BEAMS, FOUNDATION WALLS, FOUNDATION PILASTERS, STUB WALLS	4000 PSI	150 PCF
SUSPENDED REINFORCED CONCRETE SLABS AT FOUNDATION LEVEL NOT SUPPORTED ON GRADE	5000 PSI	150 PCF
SUPERSTRUCTURE WALLS, COLUMNS, BEAMS	5000 PSI	150 PCF
LIGHTWEIGHT CONCRETE FILL ON METAL DECK (INCLUDING CURBS, EQUIPMENT PADS, ETC. ON METAL DECK SLABS)	4000 PSI	115 PCF
ALL OTHER CONCRETE	4000 PSI	150 PCF

f'c IS THE 28-DAY COMPRESSIVE STRENGTH AS DEFINED IN ACI 318.

2. LIGHTWEIGHT CONCRETE SHALL BE SAND LIGHTWEIGHT CONCRETE.
3. ALL CONSTRUCTION JOINTS SHALL BE CONSTRUCTED IN ACCORDANCE WITH THE TYPICAL CONSTRUCTION JOINT DETAILS SHOWN ON THE STRUCTURAL AND ARCHITECTURAL DRAWINGS. AT MINIMUM THE CONTRACTOR SHALL: CLEAN AND ROUGHEN TO 1/4" AMPLITUDE ALL CONCRETE CONSTRUCTION JOINT SURFACES AGAINST WHICH CONCRETE IS TO BE PLACED. ALL CONSTRUCTION JOINTS SHALL BE WETTED AND STANDING WATER SHALL BE REMOVED IMMEDIATELY BEFORE NEW CONCRETE IS PLACED. PROVIDE CLASS "B" SPLICE AT ALL REINFORCEMENT CROSSING CONSTRUCTION JOINTS, TYPICAL UNLESS NOTED OTHERWISE.
4. THE CONTRACTOR SHALL COORDINATE ALL EXPOSED CONSTRUCTION, MOVEMENT JOINTS AND CONTROL JOINTS WITH THE ARCHITECT. IN ADDITION:
   - B. THE CONTRACTOR SHALL SUBMIT A CONSTRUCTION AND/OR CONTROL JOINT AND POUR SEQUENCE PLAN FOR ALL STRUCTURAL SLABS: SLAB ON METAL DECK, SUSPENDED REINFORCED CONCRETE SLABS AND SLAB ON GRADEFOLLOWING THE SPECIFICATION REQUIREMENTS.
   - C. FOR COLUMNS AND PILASTERS AND WALLS THE CONTRACTOR SHALL PLACE CONSTRUCTION JOINTS AT TOP OR BOTTOM OF INTERSECTING BEAM UNLESS NOTED OTHERWISE ON THE DRAWINGS. CONSTRUCTION JOINTS SHALL BE SHOWN ON SHOP DRAWINGS.
   - D. THE CONTRACTOR SHALL CAST BEAMS AND GRADE BEAMS SHALL CAST CONTINUOUSLY FROM SUPPORT TO SUPPORT UNLESS NOTED OTHERWISE ON DRAWINGS OR AS ACCEPTED AS PART OF A SLAB CONSTRUCTION JOINT SUBMITTAL. THE CONTRACTOR SHALL NOT PLACE ANY HORIZONTAL CONSTRUCTION JOINTS INTO BEAMS OR GRADE BEAMS.
5. PROVIDE SLEEVES FOR PLUMBING AND ELECTRICAL OPENINGS IN CONCRETE WALLS AND SLABS BEFORE PLACING CONCRETE. DO NOT CUT ANY REINFORCING WHICH MAY CONFLICT. PIPES AND/OR CONDUITS SHALL NOT PASS THROUGH COLUMNS AND BEAMS UNLESS SPECIFICALLY DETAILED ON THE STRUCTURAL DRAWINGS.
6. CORING OF CONCRETE AFTER PLACEMENT IS NOT PERMITTED
7. CLEAR COVER OF CONCRETE OVER OUTER REINFORCING BARS SHALL BE AS FOLLOWS. ALL REINFORCEMENT INCLUDING WWF SHALL BE CHAIRED UP.

LOCATION IN STRUCTURE		CLEAR COVER
CONCRETE FILL ON METAL DECK		1" FROM TOP, UNO
WALLS (NOT CAST AGAINST EARTH)	CONCRETE NOT EXPOSED TO WEATHER OR IN CONTACT WITH GROUND	3/4" (#11 AND SMALLER) 1 1/2" (#14 AND #18)
	CONCRETE EXPOSED TO EARTH OR WEATHER	1 1/2" (#5 OR SMALLER) 2" (#6 OR LARGER)
BEAMS, COLUMNS, PILASTERS (PRIMARY REINF., TIES, OR STIRRUPS)	CONCRETE NOT EXPOSED TO WEATHER OR IN CONTACT WITH GROUND	1 1/2"
	CONCRETE EXPOSED TO EARTH OR WEATHER	1 1/2" (#5 OR SMALLER) 2" (#6 OR LARGER)
FOOTINGS, PILE CAPS, GRADE BEAMS	TOP BARS	2"
	BOTTOM BARS & SIDE BARS	3"
SLAB ON GRADE	INTERIOR FACES	1 1/2" FROM TOP (INTERIOR SLAB) 2" FROM TOP (EXTERIOR SLAB U.N.O.)
FORMED SLABS	CONCRETE NOT EXPOSED TO WEATHER OR IN CONTACT WITH GROUND	3/4" (#11 AND SMALLER) 1 1/2" (#14 AND #18)
	CONCRETE EXPOSED TO EARTH OR WEATHER	1 1/2" (#5 OR SMALLER) 2" (#6 OR LARGER)
ALL CONCRETE CAST AGAINST EARTH		3"

8. ALL CONCRETE MIXES SHALL COMPLY WITH THE REQUIREMENTS OF THE PROJECT GOVERNING CODE(S). PREPARE AND SUBMIT MIX DESIGNS FOR EACH TYPE AND STRENGTH. CONCRETE MIX DESIGNS SHALL BE SEALED AND SIGNED BY A CIVIL ENGINEER REGISTERED IN THE STATE OF CALIFORNIA.
9. ALL TRANSIT-MIXED CONCRETE SHALL BE PROVIDED BY A CONCRETE PLANT WHICH COMPLIES FULLY WITH THE REQUIREMENTS OF PROJECT GOVERNING CODE(S) AND HAS BEEN CERTIFIED BY AN AGENCY ACCEPTABLE TO THE BUILDING DEPARTMENT SO THAT BATCH PLANT INSPECTION MAY BE WAIVED.
10. ARCHITECTURAL TOPPING SLABS SHALL BE PLACED AFTER CONCRETE FRAMING AND/OR CONCRETE FILL ON METAL DECK HAS REACHED THE DESIGN COMPRESSIVE STRENGTH.
11. THE PROJECTING CORNERS OF COLUMNS, BEAMS, WALLS ETC. SHALL BE FORMED WITH 3/4" CHAMFER, UNLESS NOTED OTHERWISE ON ARCHITECTURAL DRAWINGS.
12. ALL CONCRETE ELEMENTS SHALL BE REINFORCED SINCE NO PLAIN CONCRETE IS PERMITTED. ALL CONCRETE ELEMENTS SHALL BE REINFORCED WITH A MINIMUM STEEL AREA OF 0.0018 TIMES THE CROSS-SECTIONAL AREA OF CONCRETE ELEMENT CONTINUOUS IN EACH DIRECTION, TYPICAL UNLESS NOTED OTHERWISE.
13. THE CONTRACTOR SHALL NOTIFY THE TESTING AGENCY AND OWNER 48 HOURS BEFORE POURING OF CONCRETE FOR INSPECTION OF REINFORCEMENT LAYOUT. NO CONCRETE SHALL BE POURED UNLESS ALL REINFORCEMENT AND INSTALLATIONS HAVE BEEN INSPECTED AND APPROVED BY THE TESTING AGENCEY.
14. CONCRETE CAST ON SLOPED SURFACES SHALL BEGIN AT THE LOWEST ELEVATION AND CONTINUE MONOLITHICALLY TOWARD THE HIGHER ELEVATION UNTIL THE INTENDED CAST IS COMPLETED.
15. THE DEPTH OF REVEALS IN CONCRETE WALLS SHALL NOT BE GREATER THAN 3/8". WHERE REVEALS OCCUR IN CONCRETE WALLS, ADD 3/8" TO THE CLEAR COVER TO REINFORCEMENT BARS SHOWN ABOVE.
16. NO ALUMINUM SHALL BE CAST IN CONCRETE.
17. REFER TO ARCHITECTURAL DRAWINGS FOR FINISHING OF ALL EXPOSED CONCRETE SURFACES.

DESIGN BASIS

1. SUPERIMPOSED DEAD LOADS: REFER TO LOADING DIAGRAMS.
2. LIVE LOADS: REFER TO LOADING DIAGRAMS.
3. WIND LOADS:

PARAMETER	VALUE
BASIC WIND SPEED, V	101 MPH
WIND IMPORTANCE FACTOR, I	1.00
WIND EXPOSURE CATEGORY	B
RISK CATEGORY	III

4. SEISMIC LOADS:

   THE SEISMIC LOADS ARE BASED ON THE SITE CLASS AND GENERAL SEISMIC DESIGN PARAMETERS PROVIDED BY GROUP DELTA IN: "GEOTECHNICAL RECOMMENDATIONS REPORT PROPOSED LOS ANGELES HOLOCAUST MUSEUM ADDITION", DATED JULY 6, 2021.

GENERAL SEISMIC DESIGN PARAMETER	VALUE
SITE CLASS	D
SHORT PERIOD SITE COEFFICIENT, Fa	1.0
1 SEC PERIOD SITE COEFFICIENT, Fv	1.7
SHORT PERIOD SPECTRAL RESPONSE ACCELERATION, Ss	2.066 g
1 SEC PERIOD SPECTRAL RESPONSE ACCELERATION, S1	0.738 g
Sms	2.066 g
Sm1	1.254 g
Sds	1.377 g
Sd1	0.836 g
PGAM	0.973 g

LEARNING CENTER - RISK CATEGORY, IMPORTANCE FACTOR AND SFRS CLASSIFICATION	VALUE
RISK CATEGORY	III
SEISMIC DESIGN CATEGORY	D
SEISMIC IMPORTANCE FACTOR, Ie	1.25
SEISMIC WEIGHT, w	3210kips
ANALYSIS PROCEDURE	EQUIVALENT LATERAL FORCE PROCEDURE (ELF)
SFRS NORTH-SOUTH DIRECTION	
SEISMIC FORCE RESISTING SYSTEM (SFRS) PER ASCE 7	SPECIAL CONCENTRIC BRACED FRAME (SCBF)
RESPONSE MODIFICATION COEFFICIENT, R	6
SYSTEM OVERSTRENGTH FACTOR, Ω0	2
DEFLECTION AMPLIFICATION FACTOR, Cd	5
SEISMIC RESPONSE COEFFICIENT, Cs	0.29
DESIGN BASE SHEAR, V	930kips
MAXIMUM STORY DRIFT AT DESIGN LATERAL FORCE RELATIVE TO RIGID BASE	1.5in
SFRS EAST-WEST DIRECTION	
SEISMIC FORCE RESISTING SYSTEM (SFRS) PER ASCE 7	STEEL SPECIAL MOMENT FRAMES (SMF): WELDED UNREINFORCED FLANGE-WELDED WEB (WUF-W) MOMENT CONNECTION MEETING PREQUALIFICATION REQUIREMENTS PER AISC358
RESPONSE MODIFICATION COEFFICIENT, R	8
SYSTEM OVERSTRENGTH FACTOR, Ω0	3
DEFLECTION AMPLIFICATION FACTOR, Cd	5.5
SEISMIC RESPONSE COEFFICIENT, Cs	0.22
DESIGN BASE SHEAR, V	705kips
MAXIMUM STORY DRIFT AT DESIGN LATERAL FORCE RELATIVE TO RIGID BASE	2.5in

ENTRY PAVILION - RISK CATEGORY, IMPORTANCE FACTOR AND SFRS CLASSIFICATION	VALUE
RISK CATEGORY	III
SEISMIC DESIGN CATEGORY	D
SEISMIC IMPORTANCE FACTOR, Ie	1.25
SEISMIC WEIGHT, w	105kips
ANALYSIS PROCEDURE	EQUIVALENT LATERAL FORCE PROCEDURE (ELF)
SEISMIC FORCE RESISTING SYSTEM (SFRS) PER ASCE 7	STEEL SPECIAL MOMENT FRAMES (SMF): WELDED UNREINFORCED FLANGE-WELDED WEB (WUF-W) MOMENT CONNECTION MEETING PREQUALIFICATION REQUIREMENTS PER AISC358
RESPONSE MODIFICATION COEFFICIENT, R	8
SYSTEM OVERSTRENGTH FACTOR, Ω0	3
DEFLECTION AMPLIFICATION FACTOR, Cd	5.5
SEISMIC RESPONSE COEFFICIENT, Cs	0.22
DESIGN BASE SHEAR, V	24kip
MAXIMUM STORY DRIFT AT DESIGN LATERAL FORCE RELATIVE TO RIGID BASE	1.5in

BOX CAR PAVILION - RISK CATEGORY, IMPORTANCE FACTOR AND SFRS CLASSIFICATION	VALUE
RISK CATEGORY	III
SEISMIC DESIGN CATEGORY	D
SEISMIC IMPORTANCE FACTOR, Ie	1.25
SEISMIC WEIGHT, w	192kips
ANALYSIS PROCEDURE	EQUIVALENT LATERAL FORCE PROCEDURE (ELF)
SEISMIC FORCE RESISTING SYSTEM (SFRS) PER ASCE 7	STEEL SPECIAL MOMENT FRAMES (SMF): WELDED UNREINFORCED FLANGE-WELDED WEB (WUF-W) MOMENT CONNECTION MEETING PREQUALIFICATION REQUIREMENTS PER AISC358
RESPONSE MODIFICATION COEFFICIENT, R	8
SYSTEM OVERSTRENGTH FACTOR, Ω0	3
DEFLECTION AMPLIFICATION FACTOR, Cd	5.5
SEISMIC RESPONSE COEFFICIENT, Cs	0.22
DESIGN BASE SHEAR, V	41kips
MAXIMUM STORY DRIFT AT DESIGN LATERAL FORCE RELATIVE TO RIGID BASE	3.0in

CANOPY - DESIGNED AS AN NON-STRUCTURAL ATTACHMENT PER ASCE7-16 SECTION 13.1.1	VALUE
COMPONENT (ASCE7-16 TABLE 13.5-1)	OTHER FLEXIBLE COMPONENT (LIMITED DEFORMABILITY ELEMENTS AND ATTACHMENTS)
COMPONENT IMPORTANCE FACTOR Ip	1.0
COMPONENT WEIGHT wp	141kips
COMPONENT AMPLIFICATION FACTOR ap	2.5
COMPONENT RESPONSE MODIFICATION FACTOR Rp	2.5
COMPONENT OVERSTRENGTH FACTOR FOR ANCHORAGE INTO CONCRETE, Ωp	2.5
SEISMIC DESIGN FORCE Fp	78kips
MAXIMUM DRIFT AT Fp RELATIVE TO RIGID BASE	2.50in

CODES AND STANDARDS

1. WHERE CODES AND STANDARDS ARE REFERENCED IN THE CONTRACT DOCUMENTS, THEY SHALL BE THE VERSIONS LISTED IN CHAPTER 35 OF 2019 CALIFORNIA BUILDING CODE (CBC).
2. ALL WORK SHALL CONFORM TO THE REQUIREMENTS OF THE 2019 CALIFORNIA BUILDING STANDARDS CODE (CBSC) CALIFORNIA CODE OF REGULATIONS, TITLE 24, INCLUDING PART 2, VOLUMES 1 AND 2 AS AMENDED BY THE 2020 LOS ANGELES AMENDMENTS TO THE CALIFORNIA BUILDING CODES.
3. CALIFORNIA EXISTING BUILDING CODE 2019
4. IN ADDITION, THE FOLLOWING CODES, STANDARDS AND SPECIFICATIONS SHALL APPLY WHERE MORE STRINGENT AND AS MODIFIED BY THE BUILDING CODE:
   - A. ACI 318-14: BUILDING CODE REQUIREMENTS FOR STRUCTURAL CONCRETE AND COMMENTARY.
   - B. AISC 303-16: CODE OF STANDARD PRACTICE FOR STRUCTURAL STEEL BUILDINGS AND BRIDGES.
   - C. ANSI/AISC 341-16: SEISMIC PROVISIONS FOR STRUCTURAL STEEL BUILDINGS.
   - D. ANSI/AISC 358-16 WITH ANSI/AISC 358S1-18: PREQUALIFIED CONNECTIONS FOR SPECIAL AND INTERMEDIATE STEEL MOMENT FRAMES FOR SEISMIC APPLICATIONS.
   - E. ANSI/AISC 360-16: SPECIFICATIONS FOR STRUCTURAL STEEL BUILDINGS.
   - F. AISI S100-2016: NORTH AMERICAN SPECIFICATION FOR THE DESIGN OF COLD-FORMED STEEL STRUCTURAL MEMBERS.
   - G. ASCE 7-16: MINIMUM DESIGN LOADS FOR BUILDINGS AND OTHER STRUCTURES.
   - H. AWS D1.1/D1.1M:2015: STRUCTURAL WELDING CODE-STEEL.
   - I. AWS D1.3/D1.3M:2018: STRUCTURAL WELDING CODE - SHEET STEEL.
   - J. AWS D1.4/D1.4M:2018: STRUCTURAL WELDING CODE - REINFORCING STEEL.
   - K. AWS D1.8/D1.8M:2016: STRUCTURAL WELDING CODE - SEISMIC SUPPLEMENT.
   - L. ACI 530-13: BUILDING CODE REQUIREMENTS FOR MASONRY STRUCTURES.
   - M. RCSC-2014: SPECIFICATION FOR STRUCTURAL JOINTS USING HIGH-STRENGTH BOLTS.
5. THE ASTM STANDARDS REFERRED TO IN THE DRAWINGS AND SPECIFICATIONS AND USED IN DESIGN ARE THOSE INCLUDED AS REFERENCED STANDARDS TO THE PROJECT GOVERNING CODE(S). WHERE AN ASTM STANDARD HAS SUBSEQUENTLY BEEN REVISED, CONSTRUCTION SHALL COMPLY WITH BOTH THE LATEST EDITION OF THAT STANDARD AND THE EDITION OF THAT STANDARD REFERENCED IN DESIGN. WHERE IT IS NOT POSSIBLE TO SATISFY THE REQUIREMENTS OF BOTH EDITIONS OF THE STANDARDS DUE TO A CONFLICT BETWEEN THEM, NOTIFY THE ARCHITECT AND ENGINEER BEFORE PROCEEDING.

GENERAL

1. ALL CONSTRUCTION SHALL BE IN ACCORDANCE WITH THE FOLLOWING:
   - A. PROJECT GOVERNING CODE(S) AND STANDARDS.
   - B. DRAWINGS.
   - C. SPECIFICATIONS.
2. THE STRUCTURAL DRAWINGS ARE INTENDED TO WORK WITH AND BE COMPLEMENTARY TO THE PROJECT SPECIFICATIONS. REFER TO THE SPECIFICATIONS FOR ADDITIONAL REQUIREMENTS.
3. IN THE EVENT THAT CERTAIN DETAILS OF THE CONSTRUCTION ARE NOT FULLY SHOWN OR NOTED ON DRAWINGS, THEIR CONSTRUCTION SHALL BE OF THE SAME TYPE AS FOR SIMILAR CONDITIONS THAT ARE SHOWN OR NOTED, SUBJECT TO THE STRUCTURAL ENGINEER'S APPROVAL.
4. THE PROJECT LOCATION AND ELEVATIONS ARE AS DEFINED IN THE SITE PLAN DRAWING G060 BY PSOMAS.
5. THE CONTRACTOR SHALL VERIFY ALL EXISTING CONDITIONS AND DIMENSIONS BEFORE COMMENCING WITH THE WORK AND NOTIFY THE ARCHITECT AND ENGINEER OF ANY DISCREPANCIES WITH THE INFORMATION SHOWN ON THE DRAWINGS.
6. THE CONTRACTOR SHALL USE STRUCTURAL DRAWINGS IN CONJUNCTION WITH ARCHITECTURAL, MECHANICAL, ELECTRICAL, PLUMBING, FIRE PROTECTION AND ALL OTHER RELEVANT CONSULTANT DRAWINGS.
7. SEE ARCHITECTURAL DRAWINGS FOR THE FOLLOWING:
   - A. SIZE AND LOCATION OF ALL DOOR AND WINDOW OPENINGS, EXCEPT AS NOTED.
   - B. SIZE AND LOCATION OF ALL INTERIOR AND EXTERIOR NON-BEARING PARTITIONS, FAÇADE, LOUVERS ETC., EXCEPT AS NOTED
   - C. SIZE AND LOCATION OF ALL CONCRETE CURBS, FLOOR DRAINS, SLOPES, DEPRESSED AREAS, CHANGE IN LEVEL, CHAMFERS, GROOVES, INSERTS, ETC., EXCEPT AS SHOWN.
   - D. SIZE AND LOCATION OF ALL FLOOR AND ROOF OPENINGS EXCEPT AS SHOWN.
   - E. FLOOR AND ROOF FINISHES.
   - F. EDGE OF SLAB LOCATIONS AROUND THE PERIMETER AND AT INTERIOR OPENINGS, EXCEPT AS SHOWN.
   - G. DIMENSIONS NOT SHOWN ON THE STRUCTURAL DRAWINGS.
   - H. STAIRS EXCEPT AS SHOWN.
   - I. FIREPROOFING.
   - J. WATERPROOFING.
   - K. MISCELLANEOUS STEEL REQUIRED FOR SUPPORT OF ARCHITECTURAL ELEMENTS.
   - L. ALL EXISTING ELEMENTS AND STRUCTURES.
8. SEE MECHANICAL, ELECTRICAL AND PLUMBING DRAWINGS FOR THE FOLLOWING:
   - A. PIPE RUNS, SLEEVES, HANGERS, TRENCHES EXCEPT AS SHOWN OR NOTED.
   - B. ELECTRICAL CONDUIT RUNS, BOXES, OUTLETS IN WALLS AND SLABS. CONDUITS SHALL NOT BE CAST IN CONCRETE MEMBERS UNLESS SPECIFICALLY INDICATED ON THE STRUCTURAL DRAWINGS.
   - C. CONCRETE INSERTS FOR ELECTRICAL, MECHANICAL, OR PLUMBING FIXTURES.
   - D. SIZE AND LOCATION OF EQUIPMENT PADS AND EQUIPMENT ANCHORAGE EXCEPT AS SHOWN OR NOTED.
   - E. ALL LIGHTNING PROTECTION AND/OR GROUND/EARTHING REQUIREMENTS INCLUDING ANY ASSOCIATED ITEMS EMBEDDED IN OR ATTACHED TO STRUCTURE.
   - F. VERIFY AND COORDINATE ALL OPENINGS, EQUIPMENT PADS, SLEEVES AND INSERTS WITH REVIEWED SUBMITTALS, AND NOTIFY THE STRUCTURAL ENGINEER USING HIGHLIGHTED DRAWINGS PRODUCED TO SCALE WHERE THESE DEVIATE IN SIZE OR LOCATION FROM THE STRUCTURAL DRAWINGS.
9. OPENINGS, POCKETS, ETC., LARGER THAN 6" SHALL NOT BE PLACED IN CONCRETE SLABS, DECKS, WALLS, UNLESS SPECIFICALLY DETAILED ON THE STRUCTURAL DRAWINGS. NOTIFY THE STRUCTURAL ENGINEER WHEN DRAWINGS BY OTHERS SHOW OPENINGS, POCKETS, ETC. LARGER THAN 6" WHICH ARE NOT SHOWN ON THE STRUCTURAL DRAWINGS BUT WHICH ARE LOCATED IN STRUCTURAL MEMBERS.
10. DEPRESSIONS IN SLABS SHALL NOT BE PLACED UNLESS SPECIFICALLY SHOWN ON THE STRUCTURAL DRAWINGS. NOTIFY THE STRUCTURAL ENGINEER WHEN DRAWINGS BY OTHERS SHOW DEPRESSIONS WHICH ARE NOT SHOWN ON THE STRUCTURAL DRAWINGS BUT WHICH ARE LOCATED IN STRUCTURAL SLABS.
11. ALL LOADS (MEP SYSTEMS, EQUIPMENT ETC.) SUPPORTED BY STRUCTURAL FLOOR DECKS OR FRAMING EXCEEDING 20 POUNDS SHALL BE REVIEWED BY THE STRUCTURAL ENGINEER PRIOR TO INSTALLATION UNLESS SPECIFICALLY DETAILED ON THE DRAWINGS. THE CONTRACTOR SHALL SUBMIT ONE COMPOSITE PLAN PER FLOOR LEVEL WHICH INCLUDES ALL POINT LOADS OF ALL TRADES. ALL LOADS EXCEEDING 20 POUNDS SHALL BE INCLUDED IN THOSE PLANS. ALONG WITH THE PLANS, THE CONTRACTOR SHALL SUBMIT THE LOADS IN AN EXCEL FILE LISTING THE FOLLOWING DATA FOR EACH INDIVIDUAL POINT:
    - A. COORDINATES OF THE LOAD RELATIVE TO PROJECT BASE POINT.
    - B. MAGNITUDE OF LOAD. UNITS SHALL BE LBF.
    - C. DIRECTION OF LOAD; HORIZONTAL OR VERTICAL.
    - D. LOAD CASE; SEISMIC OR GRAVITY.
    - E. CATEGORIZATION BY TRADE.
    - F. IDENTIFICATION OF THE STRUCTURAL MEMBER THE LOAD IS ACTING ON; SLAB OR BEAM.
12. THE INFORMATION SHOWN FOR NON-STRUCTURAL ELEMENTS/FINISHES IS GIVEN FOR REFERENCE ONLY. THE CONTRACTOR SHALL REFER TO ARCHITECTURAL DRAWINGS FOR THIS INFORMATION.
13. SCALES NOTED ON STRUCTURAL DRAWINGS ARE FOR REFERENCE ONLY. NO DIMENSIONAL INFORMATION SHALL BE OBTAINED BY SCALING FROM THE DRAWINGS. THE CONTRACTOR SHALL VERIFY DIMENSIONS NOT NOTED WITH THE ARCHITECT PRIOR TO PROCEEDING WITH WORK.
14. CLADDING/FAÇADE/STAIR CONNECTIONS TO THE STRUCTURE SHALL NOT INTRODUCE TORSION AND UNACCEPTABLE LOAD ECCENTRICITIES TO STRUCTURAL MEMBERS. SUCH CONDITIONS SHOULD BE BROUGHT TO THE ATTENTION OF THE STRUCTURAL ENGINEER WHO MAY REQUIRE ADDITIONAL BRACING TO BE PROVIDED BY THE CLADDING/FAÇADE CONTRACTOR AT NO ADDITIONAL COST TO THE CONTRACT.
15. THE STYROFOAM INDICATED ON DRAWINGS (FOR INSTANCE UNDER EQUIPMENT PADS) SHALL BE STYROFOAM HIGHLOAD 60 BY DOW CHEMICAL COMPANY OR EQUAL CONFORMING TO ASTM C578, TYPE VII, UNLESS NOTED OTHERWISE.

NOT FOR CONSTRUCTION

09.AUG.21

ba
belzberg architects
2321 MAIN STREET
SANTA MONICA, CA 90405
310.453.9611
www.belzbergarchitects.com

ARUP
Arup North America Ltd.
900 Wilshire Boulevard,
19th Floor
Los Angeles CA 90017
Tel: 310 578 4400
www.arup.com

#	DESCRIPTION	DATE

GENERAL NOTES

PROJECT NUMBER:

S001

8/10/2021 5:29:07 PM

METAL DECK

1. METAL DECK TYPES SHALL BE AS INDICATED IN THE METAL DECK SCHEDULE (SEE TYPICAL METAL DECK DETAILS) OR EQUAL. ALL METAL DECK TYPES SHALL HAVE A CURRENT IAPMO EVALUATION REPORT.
2. MATERIALS FOR METAL DECK AND ACCESSORIES SHALL BE GALVANIZED STEEL CONFORMING TO ASTM A653-SS WITH GRADE AS INDICATED IN THE METAL DECK SCHEDULE AND ZINC COATING CONFORMING TO ASTM A653, G60 UNLESS NOTED OTHERWISE. FOR ANY DECK EXPOSED TO THE OUTSIDE IN FINAL CONSTRUCTION CONDITION, ZINC COATING SHALL CONFORM TO ASTM A653, GR90.
3. METAL DECK ACCESSORIES SHALL BE THE SAME GAGE AS DECKING UNLESS NOTED OTHERWISE.
4. WELDING SHALL BE PER AWS D1.3 AND PERFORMED BY AWS CERTIFIED WELDERS.
5. DECK UNITS, WHETHER PARALLEL OR PERPENDICULAR TO SUPPORTS, SHALL BEAR A MINIMUM OF 2 INCHES ON SUPPORTING MEMBERS.
6. DECK UNITS SHALL BE CONTINUOUS OVER THREE OR MORE SPANS, EXCEPT WHERE THE FRAMING DOES NOT PERMIT.
7. THE DESIGN INTENT IS FOR THE DECK TO BE UN-SHORED. HOWEVER, SHORING MAY BE REQUIRED AT NON-CONTINUOUS SPANS. THE CONTRACTOR SHALL CHECK ALL DECK CONDITIONS TO DETERMINE IF SHORING IS REQUIRED OR NOT. WHERE SHORING IS REQUIRED, INCLUDING SLAB EDGE CONDITIONS, THE SHORING SHALL REMAIN IN PLACE UNTIL THE CONCRETE FILL REACHES AT LEAST 75% OF THE DESIGN COMPRESSIVE STRENGTH. THE CONTRACTOR, AT HIS OPTION AND EXPENSE, MAY PROVIDE A HEAVIER GAGE OF METAL DECK ADEQUATE FOR UN-SHORED CONSTRUCTION. SHORING, WHERE REQUIRED, SHALL BE CLEARLY INDICATED ON THE SHOP DRAWINGS.
8. ATTACHMENT OF DECK UNITS SHALL BE AS INDICATED IN THE METAL DECK SCHEDULE.
9. THE CONTRACTOR SHALL DESIGN AND PROVIDE EDGE FORMS, FLASHING AND CLOSURE PLATES AT ENDS OF ALL UNITS, AROUND COLUMNS AND AT ALL PERIMETER LOCATIONS REQUIRING CLOSURE FOR CONCRETE. COORDINATE ALL CLOSURES WITH ELEVATOR, STAIR AND OTHER ARCHITECTURAL DETAILS. COMPOSITE DECK INSTALLATION, WHEN COMPLETE, SHALL BE READY TO RECEIVE CONCRETE FILL AS SHOWN ON THE DRAWINGS WITHOUT LEAKING.
10. NO CONDUITS SHALL BE EMBEDDED IN THE CONCRETE FILL.
11. CONCRETE FILL ON METAL DECK SHALL NOT BE PLACED UNTIL COLUMN BASE PLATES HAVE BEEN GROUTED.
12. CONCRETE FOR TOPPING SLABS SHALL NOT BE PLACED UNTIL CONCRETE FILL ON METAL DECK REQUIRED FOR COMPOSITE ACTION HAS REACHED FULL 28-DAY COMPRESSIVE STRENGTH.
13. CONCRETE FILL THICKNESSES OVER METAL DECK SHOWN ON FRAMING PLANS ARE THE NOMINAL THICKNESSES REQUIRED. THE CONTRACTOR SHALL MEET THESE THICKNESSES AND IN ADDITION MEET THE FLATNESS AND LEVELNESS REQUIREMENTS PER 033000. IF ADDITIONAL CONCRTE THICKNESS IS RQUIRED, THE CONTRACTOR SHALL NOT EXCEED THE OVERPOUR ALLOWANCE PROVIDED IN THE RESPECTIVE LOADING PLANS. HORIZONTAL COLD JOINTS IN SLAB ON METAL DECK SLABS ARE NOT PERMITTED.

SHEAR STUDS AND DEFORMED BAR ANCHORS

1. ALL HEADED SHEAR STUDS SHALL BE "TYPE B" PER AWS D1.1 TABLE 7.1 AND CONFORMING TO ASTM A108.
2. WELDED DEFORMED BAR ANCHORS (DBA) SHALL BE NELSON D2L OR EQUAL CONFORMING TO ASTM A496 WITH A MINIMUM YIELD STRENGTH OF 70 KSI.
3. STUDS AND DEFORMED BAR ANCHORS SHALL BE AUTOMATICALLY END WELDED IN ACCORDANCE WITH THE MANUFACTURER'S RECOMMENDATIONS IN SUCH A MANNER AS TO PROVIDE COMPLETE FUSION BETWEEN THE END OF THE STUD AND THE STRUCTURAL MEMBER. THERE SHOULD BE NO POROSITY OR EVIDENCE OF LACK OF FUSION BETWEEN THE WELDED END OF THE STUD OR DBA AND THE STRUCTURAL MEMBER. WELDING SHALL BE DONE ONLY BY QUALIFIED WELDERS APPROVED BY THE WELDING INSPECTOR.
4. STUD AND DBA LENGTHS INDICATED ON THE DRAWINGS ARE LENGTHS AFTER WELDING.
5. THE TYPE AND CAPACITY OF THE WELDING EQUIPMENT SHALL BE IN ACCORDANCE WITH THE MANUFACTURER'S RECOMMENDATIONS AND SHALL BE CHECKED BY THE INDEPENDENT TESTING AGENCY.
6. AT THE BEGINNING OF EACH DAY'S WORK, A MINIMUM OF TWO TEST SHEAR STUD WELDS SHALL BE MADE (WITH THE EQUIPMENT TO BE USED) TO METAL WHICH IS THE SAME AS THE ACTUAL WORK PIECE. THE TEST STUDS SHALL BE SUBJECTED TO A 90° BEND TEST BY STRIKING THEM WITH A HEAVY HAMMER. AFTER THE ABOVE TEST, THE WELD SECTION SHALL NOT EXHIBIT ANY TEARING OUT OR CRACKING.

STRUCTURAL STEEL WELDING

1. ALL WELDING SHALL BE DONE BY AWS CERTIFIED WELDERS.
2. SHOP DRAWINGS SHALL SHOW ALL WELDING WITH AWS A2.4 SYMBOLS.
3. WELDS SHALL BE MADE USING LOW-HYDROGEN ELECTRODES WITH MINIMUM TENSILE STRENGTH OF 70 KSI (E70XX ELECTRODES) UNLESS NOTED OTHERWISE. USE LOW-HYDROGEN ELECTRODES WITH MINIMUM TENSILE STRENGTH OF 80 KSI (E80XX ELECTRODES) FOR WELDING OF ASTM A913 GRADE 65 STEEL, ASTM A572 GRADE 65 STEEL & ASTM A1066 GRADE 65 STEEL. WHEN WELDING HIGHER GRADE STEEL TO LOWER GRADE STEEL, FILLER METAL WITH A "MATCHING" RELATIONSHIP TO BASE METAL AS DEFINED IN AWS D1.1 SHALL BE USED UNLESS NOTED OTHERWISE.
4. WELD LENGTHS CALLED FOR ON DRAWINGS ARE THE NET EFFECTIVE LENGTH REQUIRED. WHERE LENGTH OF WELD IS NOT SHOWN IT SHALL BE THE FULL LENGTH OF JOINT.
5. ALL WELDS SHALL MEET AWS D1.1 IN ADDITION:
   A. WELDS CLASSIFIED ON DRAWINGS AS D1.8 WELDS SHALL MEET THE FILLER REQUIREMENTS PER AWS D1.8 SECTION 6.3 FOR NON-DEMAND CRITICAL WELDS.
   B. WELDS CLASSIFIED AS DCW SHALL MEET FILLER REQUIREMENTS PER AWS D1.8 SECTION 6.3 FOR DEMAND CRITICAL WELDS.
   C. WELDS IN DETAILS CLASSIFIED AS SFRS SHALL BE PER AWS D1.8 SECTION 6.3 UNLESS NOTED OTHERWISE. BEAM TO COLUMN WELDS IN DETAILS CLASSIFIED AS SFRS SHALL BE DEMAND CRITICAL WELDS
6. DEMAND CRITICAL WELDS SHALL BE PROVIDED AT LOCATIONS INDICATED ON THE DRAWINGS
7. ALL GROOVE AND BUTT WELDS SHALL BE COMPLETE JOINT PENETRATION (CJP) WELDS UNLESS NOTED OTHERWISE.
8. ALL PARTIAL PENETRATION GROOVE WELD SIZES SHOWN ON THE DRAWINGS REFER TO THE EFFECTIVE THROAT THICKNESS.
9. FILLET WELD SIZES SHOWN ON DRAWINGS ARE MINIMUM SIZES. INCREASE WELD SIZE TO AWS MINIMUM SIZES BASED ON PLATE THICKNESSES. THE MINIMUM FILLET WELD SIZE SHALL BE 3/16".
10. PROJECT SPECIFIC WELDING PROCEDURE SPECIFICATION (WPS) FOR ALL SHOP AND FIELD WELDS ON THE PROJECT SHALL BE SUBMITTED FOR REVIEW AND ACCEPTANCE PRIOR TO STARTING FABRICATION OR ERECTION. THE WPS SHALL BE SUBMITTED TO OWNER'S TESTING LAB FOR REVIEW AND ACCEPTANCE PRIOR TO BEING SUBMITTED TO THE ARCHITECT.
11. THE CONTRACTOR IS RESPONSIBLE FOR SEQUENCING AND PROCEDURES OF WELDING TO MINIMIZE THE EFFECTS OF WELD SHRINKAGE AND TO MAINTAIN ERECTION TOLERANCES.
12. ALL STEEL EXPOSED TO WEATHER SHALL HAVE ADDITIONAL SEAL WELDING TO PROTECT THE MEMBERS (PIPES, TUBES, BUILT-UPS) AND THE CONNECTIONS FROM MOISTURE INFILTRATION. THESE ADDITIONAL SEAL WELDS SHALL BE SHOWN ON SHOP DRAWINGS.
13. WELDS SHOWN ON DRAWINGS MAY BE SHOP OR FIELD WELDS AT CONTRACTOR'S OPTION, UNLESS NOTED OTHERWISE.
14. WELD ACCESS HOLES SHALL BE PER AWS D1.1/D1.1M AND/OR AISC 360, UNLESS NOTED OTHERWISE.
15. ALL WELD TABS ON SFRS ELEMENTS SHALL BE IN ACCORDANCE WITH AWS D1.8/D1.8M CLAUSE 6.11. ALL WELD TABS ON NON-SFRS ELEMENTS SHALL BE IN ACCORDANCE WITH AWS D1.1/D1.1M CLAUSE 5.31.
16. ALL WELD TABS SHALL BE REMOVED FOLLOWING AWS D1.8/D1.8M CLAUSE 6.11.
17. WELD BACKING SHALL REMAIN IN PLACE UNLESS DEFINED OTHERWISE IN THE DETAILS OF THESE DRAWINGS.
18. REMOVAL OF WELD BACKING SHALL BE PER AWS D1.8/D1.8M CLAUSE 6.7 AND 6.8.
19. LEFT-IN-PLACE WELD BACKING ON SFRS ELEMENTS SHALL COMPLY WITH AWS D1.8/D1.8M CLAUSE 6.9. FURTHER INFORMATION IS PROVIDED IN THE DETAILS OF THESE DRAWINGS
20. AT THE CANOPY MAIN STEEL STRUCTURE THE CONTRACTOR SHALL:
   A. REMOVE ALL ERECTION AIDS AFTER COMPLETING WORK, GRIND SMOOTH THE CONNECTION POINTS AND REINSTATE THE CORROSION PROTECTION OR COATING.
   B. REMOVE ALL RUN OFF TABS AND GRIND SMOOTH.
   C. REMOVE EXPOSED AND VISIBLE BACKING BARS, BACKGOUGE, REWELD AND GRIND SMOOTH.

STRUCTURAL STEEL

1. STRUCTURAL STEEL MEMBERS SHALL CONFORM TO THE FOLLOWING UNLESS NOTED OTHERWISE:

SHAPE	GRADE	YIELD STRENGTH Fy (KSI)
WIDE FLANGE SHAPES, UNO	ASTM A992	50
TEES	ASTM A992	50
CHANNELS	ASTM A36	36
ANGLES	ASTM A36	36
PLATES	ASTM A572 GRADE 50	50
BARS	ASTM A572 GRADE 50	50
SQUARE & RECTANGULAR HSS	ASTM A500 GRADE C	50
ROUND HSS	ASTM A500 GRADE C	46
STEEL PIPE	ASTM A53 GRADE B	35

2. HIGH-STRENGTH BOLTS SHALL CONFORM TO THE FOLLOWING UNLESS NOTED OTHERWISE:

BOLT TYPE	REMARKS
ASTM A325	WHERE NOTED ON DRAWINGS
ASTM A490	WHERE NOTED ON DRAWINGS
ASTM A307 GRADE A	MACHINE BOLTS WHERE NOTED ON DRAWINGS

3. ANCHOR RODS SHALL BE ASTM F1554 GRADE 55 OR GRADE 105 AS NOTED ON DRAWINGS
4. WHERE NON-SLIP CRITICAL BOLTS ARE SPECIFIED THEY SHALL BE TIGHTENED TO A SNUG TIGHT CONDITION. FULLY PRETENSIONED BOLTS ARE ACCEPTABLE IN LIEU OF SNUG-TIGHT BOLTS. BOLTS IN CONNECTIONS OF ALL BEAMS AND GIRDERS TO COLUMNS SHALL BE FULLY PRETENSIONED UNLESS NOTED OTHERWISE. SEE DETAILS AND SCHEDULES FOR BOLT DIAMETERS AND TYPE.
5. FULLY PRETENSIONED OR SLIP-CRITICAL BOLTS AS SPECIFIED ON THE DRAWINGS OR IN THE GENERAL NOTES SHALL BE INSTALLED USING TWIST-OFF TYPE TORQUE CONTROL BOLTS, DIRECT TENSION INDICATORS OR TURN-OF-NUT METHOD. A COMBINATION OF THOSE METHODS IS NOT REQUIRED FOR PRETENSIONED BOLTS.
6. ALL BOLTS SPECIFIED AS SLIP CRITICAL BOLTS (A325-SC OR A490-SC) SHALL HAVE CLASS A FAYING SURFACES UNLESS NOTED OTHERWISE. ALL FILLERS AND SHIMS OF ONE BOLTED JOINT SHALL HAVE THE SAME FAYING SURFACE PREPARATION AS SPECIFIED FOR THIS SPECIFIC CONNECTION. ACCORDINGLY, SHIMS SHALL MATCH THE SURFACE PREPARATION OF THE CONNECTING PARTS.
7. ALL BOLT HOLES SHALL BE STANDARD SIZE HOLES PER AISC 360 TABLE J3.3 UNLESS NOTED OTHERWISE.
8. THE CONTRACTOR SHALL BE RESPONSIBLE FOR THE FOLLOWING:
   A. ALL ERECTION AIDS.
   B. STEELWORK ERECTION SEQUENCE. IN DETERMINING THE ERECTION SEQUENCE THE CONTRACTOR SHALL TAKE NECESSARY MEASURES TO MINIMIZE THE EFFECTS OF TEMPERATURE CHANGES AND DIFFERENTIAL TEMPERATURE EFFECTS (SUCH AS EXPOSURE TO STRONG SUN ON ONE SIDE OF THE BUILDING) WHILE MEETING AISC ACCEPTABLE ERECTION TOLERANCES.
9. THE CONTRACTOR SHALL SUBMIT DETAILED, COORDINATED AND CHECKED 2D FABRICATION DRAWINGS FOR ALL STRUCTURAL STEEL MEMBERS AND CONNECTIONS TO THE ARCHITECT FOR REVIEW PRIOR TO THE START OF FABRICATION AND ERECTION.
10. STRUCTURAL AND ARCHITECTURAL STEEL PERMANENTLY EXPOSED TO WEATHER SHALL BE CORROSION PROTECTED BY BEING HOT-DIPPED GALVANIZED AND/OR SUITABLY PRIMED AND PAINTED AS SHOWN ON ARCHITECTURAL DRAWINGS AND PER PROJECT SPECIFICATIONS. STEEL ELEMENTS EMBEDDED IN CONCRETE OR MASONRY SHALL BE LEFT UNPAINTED.
11. THE CONTRACTOR SHALL PROVIDE MINIMUM 4" CONCRETE COVER AROUND ALL STEEL MEMBERS OR COMPONENTS ADJACENT TO AND EXPOSED TO SOIL. MINIMUM REINFORCEMENT IN COVER CONCRETE SHALL BE #3 AT 12" ON CENTERS EACH WAY.
12. ALL STEEL MEMBERS FRAMING INTO CONCRETE WALLS/COLUMNS/BEAMS SHALL BE DETAILED TO SUIT CONCRETE FIELD TOLERANCES. COORDINATE WITH CONCRETE CONTRACTOR AND/OR CONDUCT FIELD SURVEYS AS NECESSARY PRIOR TO STEEL FABRICATION.
13. CUTTING AND DRILLING OF STRUCTURAL STEEL MEMBERS IN THE FIELD IS NOT PERMITTED.
14. NO OPENINGS AND/OR PENETRATIONS SHALL BE PLACED IN STEEL MEMBERS UNLESS SPECIFICALLY SHOWN AND DETAILED ON THE STRUCTURAL DRAWINGS.
15. ALL STEEL MEMBERS RELATED TO ELEVATORS SHALL BE COORDINATED WITH THE ELEVATOR CONTRACTOR PRIOR TO FABRICATION.
16. SEE ARCHITECTURAL DRAWINGS FOR LOCATIONS OF ALL ARCHITECTURALLY EXPOSED STRUCTURAL STEEL (AESS). FABRICATION, WELDING AND ERECTION OF AESS SHALL COMPLY WITH THE LATEST EDITION OF AISC CODE OF STANDARD PRACTICE FOR STEEL BUILDINGS AND BRIDGES.
17. FOLLOW PROVISIONS IN THE REFERENCED AWS STANDARDS FOR STATICALLY LOADED STRUCTURES WITH EXCEPTIONS AS NOTED IN THESE GENERAL NOTES, AISC 360 AND AISC 341.

FOUNDATIONS

1. THE FOUNDATION DESIGN IS BASED ON THE "GEOTECHNICAL RECOMMENDATIONS REPORT PROPOSED LOS ANGELES HOLOCAUST MUSEUM ADDITION", DATED JULY 6, 2021 BY GROUP DELTA.
2. UNDOCUMENTED FILL SHALL BE REMOVED AND REPLACED, WHERE REQUIRED PER THE GEOTECHNICAL REPORT, WITH ENGINEERED COMPACTED FILL MEETING THE REQUIREMENTS OF THE GEOTECHNICAL REPORT.
3. REFER TO THE GEOTECHNICAL REPORT FOR THE LIQUIFACTION RISK AND THE RESULTING DESIGN REQUIREMENTS IN THE PERMANENT AND TEMPORARY CONDITION.
4. REFER TO THE GEOTECHNICAL REPORT FOR THE FOUNDATION AND RETAINING WALL DESIGN PARAMETERS.
5. REFER TO THE GEOTECHNICAL REPORT FOR INFORMATION ON GENERAL SUBSURFACE PROFILES, SOIL PROPERTIES, EXISTING SITE FEATURES AND ALL OTHER CONDITIONS AFFECTING FOUNDATION INSTALLATION.
6. REFER TO THE GEOTECHNICAL REPORT FOR REQUIREMENTS FOR EXCAVATIONS, GRADING, COMPACTION AND BACKFILLING BEHIND WALLS RETAINING EARTH.
7. BACKFILLING AGAINST RETAINING/BASEMENT WALLS WHERE THERE IS GRADE ON BOTH SIDES OF THE WALL SHALL BE CARRIED OUT IN SUCH A MANNER THAT THE DIFFERENCE IN SOIL LEVEL IS NEVER MORE THAN 3.0 FEET. DO NOT PLACE BACKFILL BEHIND WALLS RETAINING EARTH BEFORE CONCRETE HAS ATTAINED FULL DESIGN STRENGTH UNLESS TEMPORARY BRACING IS PROVIDED.
8. BACKFILL SHALL NOT BE PLACED AGAINST WALLS RETAINING EARTH (OTHER THAN CANTILEVER WALLS) UNTIL THE ATTACHING FLOORS/SLABS (AT TOP AND BOTTOM OF THE WALL) ARE COMPLETELY IN PLACE AND HAVE ATTAINED FULL DESIGN STRENGTH.
9. NEW FOOTINGS WHICH ARE LOCATED IMMEDIATELY ADJACENT TO EXISTING FOOTINGS SHALL BE FOUNDED AT THE SAME ELEVATION AS THE EXISTING FOOTINGS UNLESS NOTED OTHERWISE. EXISTING ADJACENT FOOTINGS SHALL NOT BE UNDERMINED BY EXCAVATION OR NEW CONSTRUCTION.
10. WATER SHALL NOT BE ALLOWED TO STAND IN TRENCHES BEFORE OR AFTER CONCRETE IS PLACED. IF TRENCHES BECOME SOFTENED DUE TO RAIN OR OTHER WATER BEFORE THE FOOTINGS ARE CAST, THE GEOTECHNICAL ENGINEER SHALL REVIEW THE CONDITIONS AND PROVIDE THE NECESSARY MITIGATION REQUIREMENTS TO THE CONTRACTOR.
11. ALL EXCAVATIONS, COMPACTIONS AND BACKFILLING SHALL BE INSPECTED AND APPROVED BY THE GEOTECHNICAL ENGINEER BEFORE PLACEMENT OF CONCRETE.
12. REFER TO PLUMBING AND/OR CIVIL DRAWINGS FOR UNDER-FLOOR AND PERIMETER WALL DRAINAGE SYSTEMS AND SPECIAL GRANULAR FILL MATERIALS FOR SUCH DRAINAGE.

REINFORCING STEEL FOR CONCRETE

1. STEEL REINFORCEMENT BARS SHALL BE AS FOLLOWS:
   A. DEFORMED BARS CONFORMING TO ASTM A615 GRADE 60 UNO.
   B. DEFORMED BARS CONFORMING TO ASTM A706 GRADE 60 AS STATED ON THE DRAWINGS.
   C. DEFORMED BARS CONFORMING TO ASTM A970 FOR HEADED BARS.
   D. ASTM A1064 FOR WELDED WIRE REINFORCEMENT (WELDED WIRE FABRIC, DEFORMED). USE FLAT SHEETS ONLY.
   E. HEADED STUDS AND HEADED STUD ASSEMBLIES FOR SHEAR REINFORCEMENT OF CONCRETE CONFIRMING TO ASTM A1044.
2. MECHANICAL SPLICES SHALL BE TYPE 2 COUPLERS (UNO) WITH A CURRENT ICC APPROVAL.
3. MINIMUM LAP OF WELDED WIRE REINFORCEMENT SHALL BE 6" OR ONE FULL MESH PLUS 2", WHICHEVER IS GREATER.
4. REINFORCING BARS SHALL BE LAP SPLICED PER THE LAP SPLICE LENGTH SCHEDULE. LAP SPLICES SHALL BE SECURELY TIED AT ALL SIDE AND END LAPS.
5. REINFORCING BARS MARKED AS "CONTINUOUS" SHALL BE LAP SPLICED PER LAP SPLICE LENGTH SCHEDULE.
6. REINFORCING BAR SPLICES SHALL BE MADE ONLY WHERE INDICATED ON THE DRAWINGS. WHERE SPLICE LOCATIONS ARE NOT SHOWN ON THE DRAWINGS, THE CONTRACTOR SHALL SHOW THEIR PROPOSED SPLICE LOCATIONS ON THE SHOP DRAWINGS.
7. ALL BARS AT NON-CONTINUOUS ENDS SHALL HAVE A STANDARD HOOK.
8. WELDING OF REINFORCING STEEL BARS SHALL BE IN ACCORDANCE WITH AWS D1.4. WELD REINFORCING BARS ONLY WHERE INDICATED ON THE DRAWINGS. TACK WELDING OR WELDING OF BARS TO PLATES, TEMPLATES, ETC. IS PROHIBITED, UNLESS SPECIFICALLY SHOWN ON THE STRUCTURAL DRAWINGS.
9. DOWELS CONNECTING WALLS OR COLUMNS TO FOUNDATIONS SHALL BE THE SAME GRADE, SIZE AND SPACING AS THE VERTICAL REINFORCING BARS IN THE WALLS OR COLUMNS, UNLESS NOTED OTHERWISE.
10. ALL DOWELS SHALL BE FULLY DEVELOPED IN TENSION UNLESS NOTED OTHERWISE.
11. ADDITIONAL REINFORCEMENTS SHALL BE PROVIDED AROUND ALL SLAB AND WALL OPENINGS AS SHOWN ON THE TYPICAL DETAILS UNLESS NOTED OTHERWISE.
12. WHERE VERTICAL DOWELS FROM FOUNDATION INTERFERE WITH STEEL COLUMN BASE PLATE, THE CONTRACTOR SHALL RELOCATE THESE DOWELS THREE (3) INCHES FROM EDGE OF BASE PLATE.
13. ALL WALLS SHALL BE INTERCONNECTED AT CORNERS AND INTERSECTIONS WITH DOWELS MATCHING HORIZONTAL REINFORCEMENT PER TYPICAL DETAILS UNLESS NOTED OTHERWISE.
14. ALL FOUNDATIONS AND GRADE BEAM REINFORCEMENT SHALL BE CONTINUOUS THROUGH INTERSECTING FOUNDATIONS AND GRADE BEAMS UNLESS NOTED OTHERWISE.
15. BARS SHALL NOT BE BENT OR TWISTED IN THE FIELD, UNLESS SPECIFICALLY DETAILED ON THE STRUCTURAL DRAWINGS.
16. ALL REINFORCING BARS, INSERTS, EMBEDS ETC. SHALL BE SECURELY HELD IN PLACE TO MAINTAIN THEIR POSITIONS WHILE CONCRETE IS POURED. PROVIDE SUITABLE CHAIRS, TIES, SPACERS, ADDITIONAL BARS AND STIRRUPS AS REQUIRED.

STRUCTURAL QUANTITIES

1. FOR COST ESTIMATING PURPOSES THE CONTRACTOR MAY USE THE FOLLOWING APPROXIMATE REINFORCEMENT RATES ON THE GROSS CONCRETE VOLUME OR SURFACE OF THESE RESPECTIVE ELEMENTS. THESE ESTIMATES INCLUDE AN ALLOWANCE FOR HOOKS, STIRRUPS, DEVELOPMENT LENGTHS AND LAP SPLICES. THESE ESTIMATES DO NOT INCLUDE TRIM REINFORCEMENT AROUND OPENINGS, WASTAGE, ADDITIONAL REINFORCEMENT NEEDED FOR SUPPORT DURING CONCRETING CONSTRUCTION ETC. THE CONTRACTOR SHALL CARRY AN ALLOWANCE FOR ADDITIONAL REINFORCEMENT TO ACCOUNT FOR THESE REQUIREMENTS PLUS ANY EXPECTED WASTAGE.

ELEMENT	REINFORCEMENT RATE
SLABS	
LEARNING CENTER ENTRANCE SUSPENDED REINFORCED CONCRETE SLAB 12in THICK	11 PSF
LEARNING CENTER AND ENTRY PAVILION SLAB ON GRADE 6in THICK	2.5PSF
LEARNING CENTER ROOF SLAB ON METAL DECK	3PSF
ENTRY PAVILION ROOF SLAB ON METAL DECK	3PSF
BOX CAR PAVILION ROOF SLAB ON METAL DECK	3PSF
STRUCTURAL SUBGRADE ELEMENTS	
PILASTERS	540 PCY
GRADE BEAMS	550 PCY
TIE BEAMS	330 PCY
RETAINING WALLS 12" THICK	200 PCY
STUB WALLS 18" THICK	200 PCY

2. FOR STEEL TONNAGE ESTIMATING PURPOSES, THE CONTRACTOR SHALL CARRY THE LARGER STEEL TONNAGE OF A) SD ESTIMATE AND B) THE DD DRAWINGS AND/OR DD REVIT MODEL TONNAGE. THE CONTRACTOR SHALL VERIFY MEMBER COUNTS, POTENTIAL SPLICES WITH THE STRUCTURAL ENGINEER IN CASE THEY IMPACT PRICING. THE MEMBER COUNT IN THE DRAWINGS / REVIT MODEL SHALL NOT BE USED AT THIS STAGE FOR ESTIMATING PURPOSES.
3. WE RECOMMEND THE CONTRACTOR USES A 15% CONNECTION GROSSING PERCENTAGE FACTOR TO ESTIMATE THE ADDITIONAL STEEL WEIGHT FOR CONNECTIONS. CONNECTION GROSSING PERCENTAGE FACTOR IS A GROSSING FACTOR ON CENTERLINE MEMBER WEIGHT TO FACILITATE ESTIMATING THE EXPECTED STEEL TONNAGE OF THE PROJECT.

   THE CONNECTION PERCENTAGE FACTOR IS NOT AN ESTIMATE OF FINAL CONNECTION MATERIAL (I.E. PLATES, BOLTS, ETC). THE CONNECTION PERCENTAGE FACTOR DOES NOT INCLUDE THE WEIGHT OF WELDS OR BOLTS. THE CONNECTION PERCENTAGE FACTOR DOES NOT ACCOUNT FOR ANY MATERIAL DROP OR INEFFICIENCIES IN SHAPE NESTING DURING CUTTING OPERATIONS. THE CONTRACTOR SHALL MAKE APPROPRIATE ALLOWANCES FOR THESE ELEMENTS.

   TOTAL STEEL WEIGHTS INCLUDING CONNECTIONS SHOULD BE VERIFIED BY A COST ESTIMATOR OR STEEL FABRICATOR.
4. THE CONTRACTOR SHALL CARRY SEPARATE ALLOWANCES FOR MISCELLENOUS STEEL SUCH AS INTERIOR BENT PLATES, TRIM FRAMING REQUIRED AT THE OPENINGS, OFFSET DECK SUPPORT DAVIT OR WINDOW WASHING SUPPORT, OR ADDITIONAL SUPPORT BEAMS FOR LOCALIZED MEP OR OTHER EQUIPMENT.
5. WE RECOMMEND THAT THE CONTRACTOR CONTINUES TO CARRY A DESIGN CONTINGENCY AS INDICATED AT 100% CD.

NOT FOR CONSTRUCTION

09.AUG.21

belzberg architects
2321 MAIN STREET
SANTA MONICA, CA 90405
310.453.9611
www.belzbergarchitects.com

ARUP
Arup North America Ltd.
900 Wilshire Boulevard,
19th Floor
Los Angeles CA 90017
Tel: 310 578 4400
www.arup.com

#	DESCRIPTION	DATE

GENERAL NOTES

PROJECT NUMBER:

S002

8/10/2021 5:23:08 PM

ABBREVIATIONS

#	REINFORCING BAR SIZE, SHEET METAL SCREW SIZE, TIMBER SCREW SIZE
(E)	EXISTING
(N)	NEW
@	AT (SPACING)
A	
ADDL	ADDITIONAL
AESS	ARCHITECTURALLY EXPOSED STRUCTURAL STEEL
AHJ	AUTHORITY HAVING JURISDICTION
AOR	ARCHITECT OF RECORD
APPROX	APPROXIMATE
AR	ANCHOR ROD
ARCH	ARCHITECT, ARCHITECTURAL
B	
B	BOTTOM REINFORCING BARS
BB	BOTTOM REINFORCING BARS - BOTTOM (OUTER) LAYER
BF	BRACED FRAME
BLDG	BUILDING
BOS	BOTTOM OF STEEL
BOTT	BOTTOM
BPL	BASE PLATE
BT	BOTTOM REINFORCING BARS - TOP (INNER) LAYER
BU	BUILT UP BEAM
BRBF	BUCKLING RESTRAINED BRACED FRAME
C	
C	AMERICAN STANDARD CHANNEL
CA	COLUMN ABOVE
CB	COLUMN BELOW
CIP	CAST IN PLACE CONCRETE
CJ	CONSTRUCTION JOINT
CJP	COMPLETE JOINT PENETRATION WELD
CL	CENTERLINE
CLR	CLEAR
CMU	CONCRETE MASONRY UNITS
COL	COLUMN
CONC	CONCRETE
CONN	CONNECTION, CONNECT
CONT	CONTINUE, CONTINUOUS
CPL	COVER PLATE
D	
db	REINFORCING BAR DIAMETER
DBA	DEFORMED BAR ANCHOR
DBL	DOUBLE
DCW	DEMAND CRITICAL WELD
DEG	DEGREE
DET	DETAIL
DIA	DIAMETER
DIM	DIMENSION
DL	DEAD LOAD
DN	DOWN
DO	DITTO
DP	DEEP
DSA	DIVISION OF STATE ARCHITECT
DWG	DRAWING
E	
(E)	EXISITING
EA	EACH
EF	EACH FACE
EJ	EXPANSION JOINT
EL	ELEVATION
ELEV	ELEVATOR
EMBED	EMBEDMENT, EMBEDDED
EOR	ENGINEER OF RECORD
EQ	EQUAL
EW	EACH WAY
EXP	EXPANSION
F	
FDN	FOUNDATION
FIN	FINISH
FLG	FLANGE
FLR	FLOOR
FS	FAR SIDE
FTG	FOOTING
Fy	YIELD STRESS
G	
GA	GAGE, GAUGE
GALV	GALVANIZED
GB	GRADE BEAM
GL	GRID LINE
GR	GRADE
H	
H	HEIGHT
HA	HANGER ABOVE
HB	HANGER BELOW
HGR	HANGER
HORIZ	HORIZONTAL
HSS	SQUARE, RECTANGULAR OR ROUND HOLLOW STRUCTURAL STEEL SECTION
I	
ID	INSIDE DIAMETER
IF	INSIDE FACE
K	
KB	KICKER BELOW
L	
L	LENGTH, STEEL ANGLE
LADBS	LOS ANGELES DEPARTMENT OF BUILDING AND SAFETY
LACDPW	LOS ANGELES COUNTY DEPARTMENT OF PUBLIC WORKS
Ld	DEVELOPMENT LENGTH
Ldc	REINFORCING BAR COMPRESSION DEVELOPMENT LENGTH
Ldh	HOOKED REINFORCING BAR DEVELOPMENT LENGTH
LL	LIVE LOAD
LLBB	LONG LEG BACK TO BACK
LLH	LONG LEG HORIZONTAL
LLV	LONG LEG VERTICAL
LSL	LONG SLOTTED HOLE IN STEEL CONSTRUCTION
LTA	REINFORCING BAR LAP SPLICE TYPE A
LTB	REINFORCING BAR LAP SPLICE TYPE B
LWC	LIGHT WEIGHT CONCRETE
M	
MAX	MAXIMUM
MC	MISCELLANEOUS CHANNEL
MECH	MECHANICAL
MEP	MECHANICAL, ELECTRICAL & PLUMBING
MF	MOMENT FRAME
MIN	MINIMUM
MISC	MISCELLANEOUS
MJ	MOVEMENT JOINT
MT	MAGNETIC PARTICLE TESTING
N	
(N)	NEW
NDT	NONDESTRUCTIVE TESTING METHOD
NIC	NOT IN CONTRACT
NO	NUMBER
NOM	NOMINAL
NS	NEAR SIDE
NTS	NOT TO SCALE
NWC	NORMAL WEIGHT CONCRETE
O	
OC	ON CENTER
OD	OUTSIDE DIAMETER
OH	OPPOSITE HANDED
OPNG	OPENING
OPP	OPPOSITE
OVH	OVERSIZED HOLE
P	
PAF	POWDER ACTUATED FASTENER
PC	PILE CAP
PCF	POUNDS PER CUBIC FOOT
PJP	PARTIAL JOINT PENETRATION WELD
PL	PLATE
PSI	POUNDS PER SQUARE INCH
PT	PENETRANT TESTING
Q	
QA	QUALITY ASSURANCE
QAI	QUALITY ASSURANCE INSPECTOR
QC	QUALITY CONTROL
QCI	QUALITY CONTROL INSPECTOR
R	
RAD	RADIUS
RC	REINFORCED CONCRETE
REINF	REINFORCE, REINFORCING
REQD	REQUIRED
REV	REVISION
RT	RADIOGRAPHIC TESTING (X-RAY)
S	
S	AMERICAN STANDARD SHAPE
SAD	SEE ARCHITECTURAL DRAWINGS
SC	SLIP CRITICAL
SCHED	SCHEDULE
SDL	SUPERIMPOSED DEAD LOAD
SECT	SECTION
SEOR	STRUCTURAL ENGINEER OF RECORD
SLRS	SEISMIC LOAD RESISTING SYSTEM
SFRS	SEISMIC FORCE RESISTING SYSTEM
SIM	SIMILAR
SJ	SEISMIC JOINT
SLBB	SHORT LEG BACK TO BACK
SMF OR SMRF	SPECIAL MOMENT RESISTING FRAME
SOG	SLAB ON GRADE
SPEC, SPECS	SPECIFICATION, SPECIFICATIONS
SQ	SQUARE
SS	STAINLESS STEEL
SSL	SHORT SLOTTED HOLE
STD	STANDARD
STIFF	STIFFENER
SW	SHEAR WALL
SYM	SYMMETRIC, SYMMETRICAL
T	
T	TOP REINFORCING BARS
TB	TOP REINFORCING BARS - BOTTOM (INNER) LAYER
TT	TOP REINFORCING BARS - TOP (OUTER) LAYER
T&B	TOP AND BOTTOM
TEMP	TEMPORARY
THK	THICK
TOB	TOP OF BEAM
TOC	TOP OF CONCRETE
TOF	TOP OF FOOTING
TOP	TOP REINFORCING BARS
TOS	TOP OF STEEL
TOW	TOP OF WALL
tw	WEB THICKNESS
TYP	TYPICAL
U	
UNO	UNLESS NOTED OTHERWISE
URM	UNREINFORCED MASONRY
UT	ULTRASONIC TEST
V	
VERT	VERTICAL
VIF	VERIFY IN FIELD
W	
W	WIDE, WIDTH
W/	WITH
W/O	WITHOUT
WF	WIDE FLANGE
WP	WORK POINT
WPS	WELDING PROCEDURE SPECIFICATION

FRAMING NOTES

1. STEEL BEAMS ARE PLACED WITH THEIR WEBS IN THE VERTICAL PLANE UNLESS NOTED OTHERWISE.
2. DIMENSIONS TO STEEL MEMBERS ARE TO THEIR CENTERLINES UNLESS NOTED OTHERWISE.
3. BEAMS SHALL BE EVENLY SPACED WITHIN A BAY UNLESS NOTED OTHERWISE.
4. BEAMS NOT LOCATED IN PLAN BY A DIMENSION LINE SHALL BE EQUALLY SPACED BETWEEN DIMENSIONED MEMBERS.
5. CENTERLINE OF STEEL BEAMS ADJACENT TO SLAB EDGES AND SLAB OPENINGS SHALL BE LOCATED AT 9" FROM SLAB EDGE UNLESS NOTED OTHERWISE.
6. ALL STEEL BEAMS, INCLUDING BEAMS SHOWN ON FRAME ELEVATIONS, WITH DECKING AND CONCRETE FILL FOR WHICH SHEAR STUDS ARE NOT SPECIFIED SHALL HAVE A MINIMUM OF ONE SHEAR STUD AT 12" ON CENTER UNLESS NOTED OTHERWISE.
7. TOP OF STEEL ELEVATIONS SHALL BE BASED ON TOP OF STRUCTURAL CONCRETE ELEVATION, CONCRETE FILL THICKNESS AND DEPTH OF METAL DECKING UNLESS NOTED OTHERWISE.
8. TOP OF STEEL ELEVATION NOTED ON PLANS FOR MAIN MEMBERS WITH SECONDARY TRIM MEMBERS (SUCH AS BENT PLATE, ANGLE, OR WT ALONG PARTIAL OR FULL LENGTH OF MEMBER) IS TO THE TOP OF MAIN STEEL MEMBER UNLESS NOTED OTHERWISE.
9. FOR SLOPING MEMBERS, THE TOP OF STEEL ELEVATIONS AT THE LOW AND HIGH POINTS SHALL COINCIDE WITH THE TOP OF STEEL ELEVATIONS OF THE MEMBERS THEY FRAME TO AT THESE LOCATIONS, UNLESS NOTED OTHERWISE.
10. CAMBERS INDICATED FOR MEMBERS ARE UPWARD. DOWNWARD CAMBERS ARE GIVEN AS NEGATIVE.
11. ALL CONNECTIONS SHALL BE COMPLETED PRIOR TO CASTING SLABS.

SYMBOLS AND NOTATIONS

EL +"-"" INDICATES ELEVATION AT TOP OF STRUCTURAL CONCRETE.

INDICATES CHANGE IN SLAB ELEVATION.

INDICATES CHANGE IN SLAB SLOPE.

INDICATES CHANGE IN SLAB SLOPE.

INDICATES CHANGE IN SLAB SLOPE.

INDICATES REINFORCED CONCRETE COLUMN AND WALL.

INDICATES WALL/BEAM BELOW.

INDICATES EXISTING REINFORCED CONCRETE ELEMENTS.

INDICATES EXISTING REINFORCED CONCRETE ELEMENTS TO BE DEMOLISHED.

GB-XX INDICATES FOUNDATION GRADE BEAM PER DETAIL XXXX.

TB-XX INDICATES FOUNDATION TIE BEAM PER DETAIL XXXX.

P-N-DDT INDICATES PILE CAP PER SCHEDULE 1/S611 (N=NUMBER OF PILES, DD=DIAMETER IN INCHES, T=TYPE).

INDICATE ONE WAY SPANNING SLAB.
SLAB ON METAL DECK: D-T PER SCHEDULE XXXX
REINFROCED CONCRETE: C-T PER SCHEDULE XXXX

INDICATES TWO WAY SPANNING SLAB.
SLAB ON GRADE (SOG) PER DETAIL XXXX
SUSPENDED SLAB PER DETAIL XXXX

INDICATES NON-SFRS MOMENT CONNECTION PER DETAIL 4 AND 6/S631.

INDICATES AXIALLY RELEASED SHEAR CONNECTION PER DETAIL XXXX.

INDICATES FULL DEPTH SHEAR CONNECTION PER DETAIL XXXX.

INDICATES BOLTED DRAG CONNECTION PER DETAIL XXXX.

INDICATES BOLTED DRAG CONNECTION PER DETAIL XXXX.

INDICATES TOP FLANGE WELDED DRAG CONNECTION PER DETAIL XXXX.

INDICATES DRAG CONNECTION AT CONCRETE EMBED PER DETAIL XXXX.

INDICATES SHEAR CONNECTION AT CONCRETE EMBED PER DETAIL XXXX.

INDICATES SFRS MOMENT FRAME CONNECTION PER DETAIL XXXX.

NOT FOR CONSTRUCTION

09.AUG.21

belzberg architects
2321 MAIN STREET
SANTA MONICA, CA 90405
310.453.9611
www.belzbergarchitects.com

ARUP
Arup North America Ltd.
900 Wilshire Boulevard,
19th Floor
Los Angeles CA 90017
Tel: 310 578 4400
www.arup.com

#	DESCRIPTION	DATE

GENERAL NOTES

PROJECT NUMBER:

S003

8/10/2021 5:29:11 PM

STATEMENT OF SPECIAL INSPECTIONS - GENERAL

1. THIS SECTION OF THE GENERAL NOTES IS THE STATEMENT OF SPECIAL INSPECTION PER CBC 2016 SECTION 1704.3.

2. THE OWNER SHALL RETAIN THE SERVICES OF AN APPROVED AGENCY WHICH PERFORMS THE REQUIRED TESTS AND SPECIAL INSPECTIONS AS DEFINED IN THE CONTRACT DOCUMENTS.
   A. FOR THE PURPOSE OF THESE CONTRACT DOCUMENTS, APPROVED AGENCY IS DEFINED AS AN ESTABLISHED AND RECOGNIZED AGENCY REGULARLY ENGAGED IN CONDUCTING TESTS OR FURNISHING INSPECTION SERVICES AND ACCEPTABLE TO THE BUILDING OFFICIAL OR AUTHORITY HAVING JURISDICTION.
   B. APPROVED AGENCY SHALL BE SATISFACTORY TO THE ARCHITECT AND STRUCTURAL ENGINEER OF RECORD.
   C. APPROVED AGENCY'S SPECIAL AND DEPUTY INSPECTORS SHALL HAVE EXPERIENCE AND TRAINING RELEVANT TO THE TYPE AND COMPLEXITY OF THE PROJECT. THE INSPECTORS SHALL SUBMIT WRITTEN DOCUMENTATION OF THEIR COMPETENCY TO THE BUILDING AUTHORITY.

3. THE CONSTRUCTION OR WORK FOR WHICH SPECIAL INSPECTION IS REQUIRED SHALL REMAIN ACCESSIBLE AND EXPOSED FOR SPECIAL INSPECTION PURPOSES UNTIL COMPLETION OF THE REQUIRED SPECIAL INSPECTIONS.

4. SPECIAL INSPECTORS SHALL KEEP RECORDS OF INSPECTIONS. THE SPECIAL INSPECTOR SHALL FURNISH INSPECTION REPORTS TO THE BUILDING OFFICIAL, AND TO THE REGISTERED DESIGN PROFESSIONAL IN RESPONSIBLE CHARGE.

5. REPORTS SHALL INDICATE THAT WORK INSPECTED WAS OR WAS NOT COMPLETED IN CONFORMANCE TO APPROVED CONSTRUCTION DOCUMENTS. DISCREPANCIES SHALL BE BROUGHT TO THE IMMEDIATE ATTENTION OF THE CONTRACTOR FOR CORRECTION. IF THEY ARE NOT CORRECTED, THE DISCREPANCIES SHALL BE BROUGHT TO THE ATTENTION OF THE BUILDING OFFICIAL AND TO THE REGISTERED DESIGN PROFESSIONAL IN RESPONSIBLE CHARGE PRIOR TO THE COMPLETION OF THAT PHASE OF THE WORK.

6. A FINAL REPORT DOCUMENTING REQUIRED SPECIAL INSPECTIONS AND CORRECTION OF ANY DISCREPANCIES NOTED IN THE INSPECTIONS SHALL BE SUBMITTED AT A POINT IN TIME AGREED UPON PRIOR TO THE START OF WORK BY THE APPLICANT AND THE BUILDING OFFICIAL.

7. WHERE FABRICATION OF STRUCTURAL MEMBERS AND ASSEMBLIES IS PERFORMED ON THE PREMISES OF A FABRICATOR'S SHOP, SPECIAL INSPECTIONS OF FABRICATED ITEMS ARE REQUIRED.

8. CONTRACTORS RESPONSIBLE FOR THE CONSTRUCTION OF A WIND OR SEISMIC FORCE RESISTING SYSTEM/COMPONENT LISTED IN THE "STATEMENT OF SPECIAL INSPECTION" SHALL SUBMIT A WRITTEN STATEMENT OF RESPONSIBILITY TO THE BUILDING OFFICIAL AND INSPECTOR OF RECORD, AND THE OWNER PRIOR TO THE COMMENCEMENT OF WORK ON SUCH SYSTEM OR COMPONENT PER SECTION 1704.4.

9. CONTINUOUS SPECIAL INSPECTOR BY A REGISTERED DEPUTY INSPECTOR IS REQUIRED FOR FIELD WELDING, POST-INSTALLED ADHESIVE ANCHORS INSTALLED HORIZONTALLY OR UPWARDLY INCLINED TO RESIST SUSTAINED TENSION LOADS, SHOTCRETE PLACEMENT, CONCRETE STRENGTH F'c>2500 PSI, SPRAYED-ON FIREPROOFING, ENGINEERED MASONRY, HIGH-LIFT GROUTING, HIGH LOAD DIAPHRAGMS AND SPECIAL MOMENT-RESISTING CONCRETE FRAMES. (1705 & CHAPTER 19, 21 AND 22)

10. WHERE SPECIAL INSPECTION OR TESTING IS REQUIRED, THE REGISTERED DESIGN PROFESSIONAL IN RESPONSIBLE CHARGE SHALL INCLUDE A STATEMENT OF SPECIAL INSPECTIONS ON THE PLANS WHICH INCLUDE MATERIALS, SYSTEMS, COMPONENTS AND WORK REQUIRED TO HAVE SPECIAL INSPECTIONS OR TESTS, THE TYPE AND EXTENT OF EACH SPECIAL INSPECTION AND TEST, AND WHETHER IT WILL BE CONTINUOUS OR PERIODIC. (1704.2.3)

11. SPECIAL ACTIVITY INSPECTION IS REQUIRED FOR (BUILDINGS OVER 5 STORIES OR 60' IN HEIGHT) (BUILDINGS OVER 50,000 SQ. FT. OF GROUND FLOOR AREA) (BUILDINGS OVER 200,000 SQ. FT. OF TOTAL FLOOR AREA)(1705.1.6)

12. APPROVED AGENCY SHALL PERFORM SPECIAL INSPECTIONS IN ACCORDANCE WITH CBC SECTION 1705 INCLUDING SPECIAL INSPECTIONS FOR WIND AND SEISMIC RESISTANCE PER CBC SECTIONS 1705.11 & 1705.12 AND PER THE INSTRUCTIONS BELOW. REFER TO SPECIFICATIONS FOR ADDITIONAL REQUIREMENTS:
   A. STEEL CONSTRUCTION OTHER THAN STRUCTURAL STEEL:
      A.1 SPECIAL INSPECTIONS SHALL BE PERFORMED PER CBC SECTION 1705.2
      A.2 WELDING INSPECTION SHALL BE IN ACCORDANCE WITH AWS D1.4 AND ACI 318.
   B. CONCRETE INCLUDING SHOTCRETE CONSTRUCTION:
      B.1 SPECIAL INSPECTIONS SHALL BE PERFORMED PER CBC TABLE 1705.3
      B.2 WELDABILITY OF REINFORCEMENT, EXCEPT THAT WHICH CONFORMS TO ASTM A706 SHALL BE DETERMINED IN ACCORDANCE WITH THE REQUIREMENTS OF SECTION 3.5.2 OF ACI 318.
   C. SOILS:
      C.1 SPECIAL INSPECTIONS SHALL BE PERFORMED PER CBC TABLE 1705.6
   D. DRIVEN DEEP FOUNDATIONS:
      D.1 SPECIAL INSPECTIONS SHALL BE PERFORMED PER CBC TABLE 1705.7
   E. CAST-IN-PLACE DEEP FOUNDATION ELEMENTS:
      E.1 SPECIAL INSPECTIONS SHALL BE PERFORMED PER CBC TABLE 1705.8
   G. PROPRIETARY PRODUCTS NOT COVERED BY THE MATERIAL SPECIFIC SECTIONS OF THESE GENERAL NOTES SHALL BE TESTED AND INSPECTED IN ACCORDANCE WITH THE ICC REPORT OR IN ACCORDANCE WITH THE ACCEPTED PRODUCT APPROVAL.
   H. STEEL CONSTRUCTION FOR NON-SFRS ELEMENTS:
      H.1 SPECIAL INSPECTION SHALL BE PERFORMED PER TABLES H.1 THROUGH H.6 FOR ALL STRUCTURAL STEEL ELEMENTS NOT PART OF THE SFRS.
      H.2 DEFINITIONS:
      QC = QUALITY CONTROL IS THE TESTING AND INSPECTION PROGRAM PERFORMED BY THE FABRICATOR'S OR ERECTOR'S QUALITY CONTROL INSPECTOR (QCI).
      QA = QUALITY ASSURANCE IS THE TESTING AND INSPECTION PROGRAM PERFORMED BY APPROVED AGENCY AND THEIR INSPECTORS (QAI).
      O – OBSERVE THESE ITEMS ON A RANDOM BASIS. OPERATIONS NEED NOT BE DELAYED PENDING THESE INSPECTIONS. REFER TO THE RESPECTIVE TABLES H.1 THROUGH H.6 OF THE GENERAL NOTES.
      P – PERFORM THESE TASKS FOR EACH WELDED JOINT OR MEMBER (FOR WELDS) OR BOLTED CONNECTION (FOR BOLTS) OR EACH STEEL ELEMENT (FOR COMPOSITE CONSTRUCTION) PER THE RESPECTIVE TABLES H.1 THROUGH H.6 OF THE GENERAL NOTES.
      H.2 QUALTIY CONTROL (QC) INSPECTION TASKS SHALL BE PERFORMED BY THE FABRICATOR'S OR ERECTOR'S QUALITY CONTROL INSPECTOR (QCI). AS APPLICABLE, IN ACCORDANCE WITH THE GENERAL NOTES, THE TABLES H.1 THROUGH H.6 AS SHOWN BELOW AND AISC 360. LISTED FOR QC ARE THOSE INSPECTIONS PERFORMED BY THE QCI TO ENSURE THAT THE WORK IS PERFORMED IN ACCORDANCE WITH THE CONSTRUCTION DOCUMENTS. FOR QC INSPECTION, THE APPLICABLE CONSTRUCTION DOCUMENTS ARE THE SHOP DRAWINGS AND THE ERECTION DRAWINGS, AND THE APPLICABLE REFERENCED SPECIFICATIONS, CODES AND STANDARDS.
      H.3 QUALITY ASSURANCE (QA) INSPECTION OF FABRICATED ITEMS SHALL BE MADE AT THE FABRICATOR'S PLANT. THE QUALITY ASSURANCE INSPECTOR (QAI) SHALL SCHEDULE THIS WORK TO MINIMIZE INTERRUPTION TO THE WORK OF THE FABRICATOR. QA INSPECTION OF THE ERECTED STEEL SYSTEM SHALL BE MADE AT THE PROJECT SITE. THE QAI SHALL SCHEDULE THIS WORK TO MINIMIZE INTERRUPTION TO THE WORK OF THE ERECTOR. THE QAI SHALL REVIEW THE MATERIAL TEST REPORTS AND CERTIFICATIONS PER AISC 360 SECTION N FOR COMPLIANCE WITH THE CONSTRUCTION DOCUMENTS. QA INSPECTION TASKS SHALL BE PERFORMED BY THE QAI, IN ACCORDANCE WITH THE GENERAL NOTES, TABLES H.1 THROUGH H.6 AS SHOWN BELOW AND AISC 360. LISTED FOR QA ARE THOSE INSPECTIONS PERFORMED BY THE QAI TO ENSURE THAT THE WORK IS PERFORMED IN ACCORDANCE WITH THE CONSTRUCTION DOCUMENTS CONCURRENT WITH THE SUBMITTAL OF SUCH REPORTS TO THE AHJ, EOR OR OWNER, THE QA AGENCY SHALL SUBMIT TO THE FABRICATOR AND ERECTOR: (1) INSPECTION REPORTS, (2) NONDESTRUCTIVE TESTING REPORTS.
      H.6 APPPROVED AGENCY SHALL USE OBSERVATION OF WELDING OPERATIONS AND VISUAL INSPECTION OF IN-PROCESS AND COMPLETED WELDS AS THE PRIMARY METHOD TO CONFIRM THAT THE MATERIALS, PROCEDURES AND WORKMANSHIP ARE IN CONFORMANCE WITH THE CONSTRUCTION DOCUMENTS. FOR STRUCTURAL STEEL, ALL PROVISIONS OF AWS D1.1/D1.1M STRUCTURAL WELDING CODE - STEEL FOR STATICALLY LOADED STRUCTURES SHALL APPLY WITH EXCEPTIONS AS NOTED IN THESE GENERAL NOTES OR AISC 360.
      H.7 APPROVED AGENCY SHALL PERFORM THE QA USING THE FOLLOWING NON-DESTRUCTIVE TESING METHODES: ULTRASONIC TESTING (UT), MAGNETIC PARTICLE TESTING (MT), PENETRANT TESTING (PT) AND RADIOGRAPHIC TESTING (RT), WHERE REQUIRED, IN ACCORDANCE WITH AWS D1.1/D1.1M. ACCEPTANCE CRITERIA SHALL BE IN ACCORDANCE WITH AWS D1.1/D1.1M FOR STATICALLY LOADED STRUCTURES, UNLESS OTHERWISE DESIGNATED IN THE DESIGN DRAWINGS OR PROJECT SPECIFICATIONS.
      H.8 COMPLETE JOINT PENETRATION GROOVE WELD NON-DESTRUCTIVE TESING: FOR STRUCTURES IN RISK CATEGORY III OR IV AS CLASSIFIED IN THE GENERAL NOTES, RISK CATEGORY OF BUILDINGS AND OTHER STRUCTURES FOR FLOOD, WIND, SNOW, EARTHQUAKE AND ICE LOADS, OF ASCE, UT SHALL BE PER-FORMED BY QA ON ALL CJP GROOVE WELDS SUBJECT TO TRANSVERSELY APPLIED TENSION LOADING IN BUTT, T- AND CORNER JOINTS, IN MATERIALS 5/16 IN THICK OR GREATER. FOR STRUCTURES IN RISK CATEGORY II, UT SHALL BE PERFORMED BY QA ON 10% OF CJP GROOVE WELDS IN BUTT, T- AND CORNER JOINTS SUBJECT TO TRANSVERSELY APPLIED TENSION LOADING, IN MATERIALS 5/16 IN THICK OR GREATER.
      H.9 ACCESS HOLES: THERMALLY CUT SURFACES OF ACCESS HOLES SHALL BE TESTED BY QA USING MT OR PT, WHEN THE FLANGE THICKNESS EXCEEDS 2 IN FOR ROLLED SHAPES, OR WHEN THE WEB THICKNESS EXCEEDS 2 IN FOR BUILT-UP SHAPES. ANY CRACK SHALL BE DEEMED UNACCEPTABLE REGARDLESS OF SIZE OR LOCATION.
      H.10 REDUCTION OF RATE OF ULTRASONIC TESTING: THE RATE OF UT IS PERMITTED TO BE REDUCED IF APPROVED BY THE EOR AND THE AHJ. WHERE THE INITIAL RATE FOR UT IS 100%, THE NDT RATE FOR AN INDIVIDUAL WELDER OR WELDING OPERATOR IS PERMITTED TO BE REDUCED TO 25%, PROVIDED THE REJECT RATE, THE NUMBER OF WELDS CONTAINING UNACCEPTABLE DEFECTS DIVIDED BY THE NUMBER OF WELDS COMPLETED, IS DEMONSTRATED TO BE 5% OR LESS OF THE WELDS TESTED FOR THE WELDER OR WELDING OPERATOR. A SAMPLING OF AT LEAST 40 COMPLETED WELDS FOR A JOB SHALL BE MADE FOR SUCH REDUCTION EVALUATION. FOR EVALUATING THE REJECT RATE OF CONTINUOUS WELDS OVER 3 FT IN LENGTH WHERE THE EFFECTIVE THROAT IS 1 IN OR LESS, EACH 12 IN INCREMENT OR FRACTION THEREOF SHALL BE CONSIDERED AS ONE WELD. FOR EVALUATING THE REJECT RATE ON CONTINUOUS WELDS OVER 3 FT IN LENGTH WHERE THE EFFECTIVE THROAT IS GREATER THAN 1 IN, EACH 6 IN OF LENGTH OR FRACTION THEREOF SHALL BE CONSIDERED ONE WELD.
      H.11 INCREASE IN RATE OF ULTRASONIC TESTING: FOR STRUCTURES IN RISK CATEGORY II, WHERE THE INITIAL RATE FOR UT IS 10%, THE NDT RATE FOR AN INDIVIDUAL WELDER OR WELDING OPERATOR SHALL BE INCREASED TO 100% SHOULD THE REJECT RATE, THE NUMBER OF WELDS CONTAINING UNACCEPTABLE DEFECTS DIVIDED BY THE NUMBER OF WELDS COMPLETED, EXCEEDS 5% OF THE WELDS TESTED FOR THE WELDER OR WELDING OPERATOR. A SAMPLING OF AT LEAST 20 COMPLETED WELDS FOR A JOB SHALL BE MADE PRIOR TO IMPLEMENTING SUCH AN INCREASE. WHEN THE REJECT RATE FOR THE WELDER OR WELDING OPERATOR, AFTER A SAMPLING OF AT LEAST 40 COMPLETED WELDS, HAS FALLEN TO 5% OR LESS, THE RATE OF UT SHALL BE RETURNED TO 10%. FOR EVALUATING THE REJECT RATE OF CONTINUOUS WELDS OVER 3 FT IN LENGTH WHERE THE EFFECTIVE THROAT IS 1 IN OR LESS,

STATEMENT OF SPECIAL INSPECTIONS - GENERAL (2)

      H.12 INSPECTION OF HIGH-STRENGTH BOLTING: OBSERVATION OF BOLTING OPERATIONS SHALL BE THE PRIMARY METHOD USED TO CONFIRM THAT THE MATERIALS, PROCEDURES AND WORKMANSHIP INCORPORATED IN CONSTRUCTION ARE IN CONFORMANCE WITH THE CONSTRUCTION DOCUMENTS AND THE PROVISIONS OF THE RCSC SPECIFICATION.
      H.13 SNUG-TIGHT BOLTED JOINTS: FOR SNUG-TIGHT JOINTS, PRE-INSTALLATION VERIFICATION TESTING AS SPECIFIED IN TABLE N5.6-1 AND MONITORING OF THE INSTALLATION PROCEDURES AS SPECIFIED IN TABLE N5.6-2 ARE NOT APPLICABLE. THE QCI AND QAI NEED NOT BE PRESENT DURING THE INSTALLATION OF FASTENERS IN SNUG-TIGHT JOINTS.
      H.14 PRE-TENSIONED OR SLIP-CRITICAL BOLTED JOINTS: FOR PRETENSIONED JOINTS AND SLIP-CRITICAL JOINTS, WHEN THE INSTALLER IS USING THE TURN-OF-NUT METHOD WITH MATCHMARKING TECHNIQUES, THE DIRECT-TENSION-INDICATOR METHOD, OR THE TWIST-OFF-TYPE TENSION CONTROL BOLT METHOD, MONITORING OF BOLT PRE-TENSIONING PROCEDURES SHALL BE AS SPECIFIED IN TABLE N5.6-2. THE QCI AND QAI NEED NOT BE PRESENT DURING THE INSTALLATION OF FASTENERS WHEN THESE METHODS ARE USED BY THE INSTALLER. OTHER PROCEDURES THAN THE TWIST OFF METHOD OR THE DIRECT TENSION INDICATORS ARE NOT PERMITTED PER PROJECT SPECIFICATION.
      H.15 THE QAI SHALL BE ON THE PREMISES FOR INSPECTION DURING THE PLACEMENT OF ANCHOR RODS AND OTHER EMBEDMENTS SUPPORTING STRUCTURAL STEEL FOR COMPLIANCE WITH THE CONSTRUCTION DOCUMENTS. AS A MINIMUM, THE DIAMETER, GRADE, TYPE AND LENGTH OF THE ANCHOR ROD OR EMBEDDED ITEM, AND THE EXTENT OR DEPTH OF EMBEDMENT INTO THE CONCRETE, SHALL BE VERIFIED PRIOR TO PLACEMENT OF CONCRETE.
      H.16 FOR WELDING OF STEEL DECK, OBSERVATION OF WELDING OPERATIONS AND VISUAL INSPECTION OF IN-PROCESS AND COMPLETED WELDS SHALL BE THE PRIMARY METHOD TO CONFIRM THAT THE MATERIALS, PROCEDURES AND WORKMANSHIP ARE IN CONFORMANCE WITH THE CONSTRUCTION DOCUMENTS. ALL APPLICABLE PROVISIONS OF AWS D1.3/D1.3M, STRUCTURAL WELDING CODE—SHEET STEEL, SHALL APPLY. DECK WELDING INSPECTION SHALL INCLUDE VERIFICATION OF THE WELDING CONSUMABLES, WELDING PROCEDURE SPECIFICATIONS AND QUALIFICATIONS OF WELDING PERSONNEL PRIOR TO THE START OF THE WORK, OBSERVATIONS OF THE WORK IN PROGRESS, AND A VISUAL INSPECTION OF ALL COMPLETED WELDS. FOR STEEL DECK ATTACHED BY FASTENINGSYSTEMS OTHER THAN WELDING, INSPECTION SHALL INCLUDE VERIFICATION OF THE FASTENERS TO BE USED PRIOR TO THE START OF THE WORK, OBSERVATIONS OF THE WORK IN PROGRESS TO CONFIRM INSTALLATION IN CONFORMANCE WITH THE MANUFACTURER'S RECOMMENDATIONS, AND A VISUAL INSPECTION OF THE COMPLETED INSTALLATION.

   I. STEEL CONSTRUCTION FOR SFRS ELEMENTS (SPECIAL INSPECTION FOR SEISMIC RESISTENCE PER CBC 2016 SECTION 1705.12).
      I.1 SPECIAL INSPECTION SHALL BE PERFORMED PER TABLES I.1 THROUGH I.11 FOR ALL STRUCTURAL STEEL ELEMENTS DESIGNATED AS PART OF THE SFRS.
      I.2 IN ADDITION, SPECIAL INSPECTION SHALL BE PERFORMED PER TABLES I.1 THROUGH I.11 FOR ALL WELDS DESIGNATED AS AWS D1.8 (MARKED AS D1.8 ON DRAWINGS) AND ALL WELDS DESIGNATED AS AWS D1.8-DCW (DEMAND CRITICAL WELDS, MARKED AS DCW ON DRAWINGS).
      I.3 DEFINITIONS:
      QC = QUALITY CONTROL IS THE TESTING AND INSPECTION PROGRAM PERFORMED BY THE FABRICATOR'S OR ERECTOR'S QUALITY CONTROL INSPECTOR (QCI).
      QA = QUALITY ASSURANCE IS THE TESTING AND INSPECTION PROGRAM PERFORMED BY APPROVED AGENCY AND THEIR INSPECTORS (QAI).
      O = OBSERVE. OBSERVE THESE ITEMS ON A RANDOM BASIS. OPERATIONS NEED NOT BE DELAYED PENDING THESE INSPECTIONS. REFER TO THE RESPECTIVE TABLES I.1 THROUGH I.11.
      P = PERFORM. PERFORM THESE TASKS PRIOR TO THE FINAL ACCEPTANCE OF THE ITEM. REFER TO THE RESPECTIVE TABLES I.1 THROUGH I.11.
      D – DOCUMENT. THE INSPECTOR SHALL PREPARE REPORTS INDICATING THAT THE WORK HAS BEEN PERFORMED IN ACCORDANCE WITH THE CONTRACT DOCUMENTS. THE REPORT NEED NOT PROVIDE DETAILED MEASUREMENTS FOR JOINT FIT-UP, WPS SETTINGS, COMPLETED WELDS, OR OTHER INDIVIDUAL ITEMS LISTED IN THE TABLES. FOR SHOP FABRICATION, THE REPORT SHALL INDICATE THE PIECE MARK OF THE PIECE INSPECTED. FOR FIELD WORK, THE REPORT SHALL DELINEATE THE REFERENCE GRID LINES AND FLOOR OR ELEVATION INSPECTED. WORK NOT IN COMPLIANCE WITH THE CONTRACT DOCUMENTS AND WHETHER THE NONCOMPLIANCE HAS BEEN SATISFACTORILY REPAIRED SHALL BE NOTED IN THE INSPECTION REPORT.
      I.4 WELDING INSPECTION AND NONDESTRUCTIVE TESTING SHALL SATISFY THE REQUIREMENTS OF AISC 360, AISC 341 AND AWS D1.8/D1.8M.
      I.5 NONDESTRUCTIVE TESING OF WELDED JOINTS: IN ADDITION TO THE INSPECTION REQUIREMENTS DEFINED IN TABLES H.1 THROUGH H.2, NONDESTRUCTIVE TESTING OF WELDED JOINTS SHALL BE AS PER TABLES I.1 THROUGH I.3.
      I.6 K-AREA NONDESTRUCTIVE TESTING: WHERE WELDING OF DOUBLER PLATES, CONTINUITY PLATES OR STIFFENERS HAS BEEN PERFORMED IN THE K-AREA, THE WEB SHALL BE TESTED FOR CRACKS USING MAGNETIC PARTICLE TESTING (MT). THE MT INSPECTION AREA SHALL INCLUDE THE K-AREA BASE METAL WITHIN 3 IN. (75 MM) OFTHE WELD. THE MT SHALL BE PERFORMED NO SOONER THAN 48 HOURS FOLLOWING COMPLETION OF THE WELDING.
      I.7 COMPLETE JOINT PENETRATION GROOVE WELD NONDESTRUCTIVE TESTING: ULTRASONIC TESTING (UT) SHALL BE PERFORMED ON 100% OF CJP GROOVE WELDS IN MATERIALS 5/16 IN THICK OR GREATER. ULTRASONIC TESTING IN MATERIALS LESS THAN 5/16 IN THICK IS NOT REQUIRED. WELD DISCONTINUITIES SHALL BE ACCEPTED OR REJECTED ON THE BASIS OF CRITERIA OF AWS D1.1/D1.1M TABLE 6.2. MAGNETIC PARTICLE TESTING SHALL BE PERFORMED ON 25% OF ALL BEAM-TO-COLUMN CJP GROOVE WELDS. THE RATE OF UT AND MT IS PERMITTED TO BE REDUCED AS DESCRIBED BELOW. EXCEPTION: FOR ORDINARY MOMENT FRAMES, UT AND MT OF CJP GROOVE WELDS ARE REQUIRED ONLY FOR DEMAND CRITICAL WELDS.
      I.8 BASE METAL NDT FOR LAMELLAR TEARING AND LAMINATIONS: AFTER JOINT COMPLETION, BASE METAL THICKER THAN 1-1/2 IN LOADED IN TENSION IN THE THROUGH-THICKNESS DIRECTION IN TEE AND CORNER JOINTS, WHERE THE CONNECTED MATERIAL IS GREATER THAN 3/4 IN AND CONTAINS CJP GROOVE WELDS, SHALL BE ULTRASONICALLY TESTED FOR DISCONTINUITIES BEHIND AND ADJACENT TO THE FUSION LINE OF SUCH WELDS. ANY BASE METAL DISCONTINUITIES FOUND WITHIN T/4 OF THE STEEL SURFACE SHALL BE ACCEPTED OR REJECTED ON THE BASIS OF CRITERIA OF AWS D1.1/D1.1M TABLE 6.2, WHERE T IS THE THICKNESS OF THE PART SUBJECTED TO THE THROUGH-THICKNESS STRAIN.
      I.9 BEAM COPE AND ACCESS HOLE NDT: AT WELDED SPLICES AND CONNECTIONS, THERMALLY CUT SURFACES OF BEAM COPES AND ACCESSHOLES SHALL BE TESTED USING MAGNETIC PARTICLE TESTING OR PENETRANT TESTING, WHEN THE FLANGE THICKNESS EXCEEDS 1-1/2 IN FOR ROLLED SHAPES, OR WHEN THE WEB THICKNESS EXCEEDS 11/2 IN FOR BUILT-UP SHAPES.
      I.10 REDUCED BEAM SECTION REPAIR NDT: MAGNETIC PARTICLE TESTING SHALL BE PERFORMED ON ANY WELD AND ADJACENT AREA OF THE REDUCED BEAM SECTION (RBS) CUT SURFACE THAT HAS BEEN REPAIRED BY WELDING, OR ON THE BASE METAL OF THE RBS CUT SURFACE IF A SHARP NOTCH HAS BEEN REMOVED BY GRINDING.
      I.11 WELD TAB REMOVAL SITES: AT THE END OF WELDS WHERE WELD TABS HAVE BEEN REMOVED, MAGNETIC PARTICLE TESTING SHALL BE PERFORMED ON THE SAME BEAM-TO-COLUMN JOINTS RECEIVING UT AS REQUIRED PER SECTION I.7 ABOVE. THE RATE OF MT IS PERMITTED TO BE REDUCED IN ACCORDANCE WITH SECTION I.13. MT OF CONTINUITY PLATE WELD TABS REMOVAL SITES IS NOT REQUIRED.
      I.12 REDUCTION OF PERCENTAGE OF ULTRASONIC TESTING: THE REDUCTION OF PERCENTAGE OF UT IS PERMITTED TO BE REDUCED IN ACCORDANCE WITH H.10, EXCEPT NO REDUCTION IS PERMITTED FOR DEMAND CRITICAL WELDS.
      I.13 REDUCTION OF PERCENTAGE OF MAGNETIC PARTICLE TESTING: THE AMOUNT OF MT ON CJP GROOVE WELDS IS PERMITTED TO BE REDUCED IF APPROVED BY THE ENGINEER OF RECORD AND THE AUTHORITY HAVING JURISDICTION. THE MT RATE FOR AN INDIVIDUAL WELDER OR WELDING OPERATOR IS PERMITTED TO BE REDUCED TO 10%, PROVIDED THE REJECT RATE IS DEMONSTRATED TO BE 5% OR LESS OF THE WELDS TESTED FOR THE WELDER OR WELDING OPERATOR. A SAMPLING OF AT LEAST 20 COMPLETED WELDS FOR A JOB SHALL BE MADE FOR SUCH REDUCTION EVALUATION. REJECT RATE IS THE NUMBER OF WELDS CONTAINING REJECTABLE DEFECTS DIVIDED BY THE NUMBER OF WELDS COMPLETED. THIS REDUCTION IS PROHIBITED ON WELDS IN THE K-AREA, AT REPAIR SITES, BACKING REMOVAL SITES, AND ACCESS HOLES.
      I.14 INSPECTION OF HIGH-STRENGTH BOLTING: BOLTING INSPECTION SHALL SATISFY THE REQUIREMENTS OF THE NON-SFRS INSPECTION REQUIREMENTS FOR BOLTING OF THE GENERAL. BOLTING INSPECTION SHALL BE PERFORMED BY BOTH QUALITY CONTROL AND QUALITY ASSURANCE PERSONNEL. AS A MINIMUM, THE TASKS SHALL BE AS LISTED IN TABLES I.3 THROUGH I.6
      I.15 OTHER STEEL STRUCTURE INSPECTIONS: OTHER INSPECTIONS OF THE STEEL STRUCTURE SHALL SATISFY THE REQUIREMENTS OF NON-SFRS ELEMENT AND THIS SECTION. SUCH INSPECTIONS SHALL BE PERFORMED BY BOTH QUALITY CONTROL AND QUALITY ASSURANCE PERSONNEL. WHERE APPLICABLE, THE INSPECTION TASKS LISTED IN TABLE I.7 SHALL BE PERFORMED.
      I.16 INSPECTION OF COMPOSITE STRUCTURES: WHERE APPLICABLE, INSPECTIONS OF THE COMPOSITE STRUCTURES SHALL SATISFY THE REQUIREMENTS OF THE NON-SFRS ELEMENTS AND THIS SECTION. THESE INSPECTIONS SHALL BE PERFORMED BY THE RESPONSIBLE CONTRACTOR'S QUALITY CONTROL PERSONNEL AND BY QUALITY ASSURANCE PERSONNEL. WHERE APPLICABLE, INSPECTION OF STRUCTURAL STEEL USED IN COMPOSITE STRUCTURES SHALL COMPLY TABLES I.8 THROUGH I.10. WHERE APPLICABLE, INSPECTION OF REINFORCED CONCRETE SHALL COMPLY WITH THE REQUIREMENTS OF ACI 318, AND INSPECTION OF WELDED REINFORCING STEEL SHALL COMPLY WITH THE APPLICABLE REQUIREMENTS PER TABLES H.1 AND H.2.
      I.17 INSPECTION OF H-PILES: WHERE APPLICABLE, INSPECTION OF PILING SHALL SATISFY THE REQUIREMENTS OF THIS SECTION. THESE INSPECTIONS SHALL BE PERFORMED BY BOTH THE RESPONSIBLE CONTRACTOR'S QUALITY CONTROL PERSONNEL AND BY QUALITY ASSURANCE PERSONNEL. WHERE APPLICABLE, THE INSPECTION TASKS LISTED IN TABLE I.11 SHALL BE PERFORMED.

STATEMENT OF SPECIAL INSPECTIONS

1. NON-SFRS STEEL MEMBERS - TABLES H.1 - H.6

TABLE H.1 | AISC 360-10 | TABLE N5.4-1

Inspection Tasks Prior to Welding	QC	QA
Welding procedure specifications (WPSs) available	P	P
Manufacturer certifications for welding consumables available	P	P
Material identification (type/grade)	O	O
Welder identification system (a)	O	O
Fit-up of groove welds (including joint geometry) • Joint preparation • Dimensions (alignment, root opening, root face, bevel) • Cleanliness (condition of steel surfaces) • Tacking (tack weld quality and location) • Backing type and fit (if applicable)	O	O
Configuration and finish of access holes	O	O
Fit-up of fillet welds • Dimensions (alignment, gaps at root) • Cleanliness (condition of steel surfaces) • Tacking (tack weld quality and location)	O	O
Check welding equipment	O	—

(a) The fabricator or erector, as applicable, shall maintain a system by which a welder who has welded a joint or member can be identified. Stamps, if used, shall be the low-stress type.

TABLE H.2 | AISC 360-10 | TABLE N5.4-3

Inspection Tasks After Welding	QC	QA
Welds cleaned	O	O
Size, length and location of welds	P	P
Welds meet visual acceptance criteria • Crack prohibition • Weld/base-metal fusion • Crater cross section • Weld profiles • Weld size • Undercut • Porosity	P	P
Arc strikes	P	P
k-area (b)	P	P
Backing removed and weld tabs removed (if required)	P	P
Repair activities	P	P
Document acceptance or rejection of welded joint or member	P	P

(b) When welding of doubler plates, continuity plates or stiffeners has been performed in the k-area, visually inspect the web k-area for cracks within 3 in. (75 mm) of the weld.

TABLE H.3 | AISC 360-10 | TABLE N5.6-1

Inspection Tasks Prior to Bolting	QC	QA
Manufacturer's certifications available for fastener materials	O	P
Fasteners marked in accordance with ASTM requirements	O	O
Proper fasteners selected for the joint detail (grade, type, bolt length if threads are to be excluded from shear plane)	O	O
Proper bolting procedure selected for joint detail	O	O
Connecting elements, including the appropriate faying surface condition and hole preparation, if specified, meet applicable requirements	O	O
Pre-installation verification testing by installation personnel observed and documented for fastener assemblies and methods used	P	O
Proper storage provided for bolts, nuts, washers and other fastener components	O	O

TABLE H.4 | AISC 360-10 | TABLE N5.6-2

Inspection Tasks During Bolting	QC	QA
Fastener assemblies, of suitable condition, placed in all holes and washers (if required) are positioned as required	O	O
Joint brought to the snug-tight condition prior to the pretensioning operatio	O	O
Fastener component not turned by the wrench prevented from rotating	O	O
Fasteners are pretensioned in accordance with the RCSC Specification, progressing systematically from the most rigid point toward the free edges	O	O

TABLE H.5 | AISC 360-10 | TABLE N5.6-3

Inspection Tasks After Bolting	QC	QA
Document acceptance or rejection of bolted connections	P	P

TABLE H.6 | AISC 360-10 | TABLE N6.1

Inspection of Steel Elements of Composite Construction Prior to Concrete Placement	QC	QA
Placement and installation of steel deck	P	P
Placement and installation of steel headed stud anchors	P	P
Document acceptance or rejection of steel elements	P	P

STATEMENT OF SPECIAL INSPECTIONS

1. SFRS STEEL MEMBERS - TABLES I.1 - I.11

TABLE I.1 | AISC 341-10 | TABLE J6-1
Visual Inspection Tasks Prior to Welding

Visual Inspection Tasks Prior to Welding	QA		QC	
	Task	Doc.	Task	Doc.
Material identification (Type/Grade)	O	–	O	–
Welder identification system	O	–	O	–
Fit-up of Groove Welds (including joint geometry) - Joint preparation - Dimensions (alignment, root opening, root face, bevel) - Cleanliness (condition of steel surfaces) - Tacking (tack weld quality and location) - Backing type and fit (if applicable)	P/O**	–	O	–
Configuration and finish of access holes	O	–	O	–
Fit-up of Fillet Welds - Dimensions (alignment, gaps at root) - Cleanliness (condition of steel surfaces) - Tacking (tack weld quality and location)	P/O**	–	O	–

** Following performance of this inspection task for ten welds to be made by a given welder, with the welder demonstrating understanding of requirements and possession of skills and tools to verify these items, the Perform designation of this task shall be reduced to Observe, and the welder shall perform this task. Should the inspector determine that the welder has discontinued performance of this task, the task shall be returned to Perform until such time as the Inspector has re-established adequate assurance that the welder will perform the inspection tasks listed.

TABLE I.2 | AISC 341-10 | TABLE J6-2
Visual Inspection Tasks During Welding

Visual Inspection Tasks During Welding	QA		QC	
	Task	Doc.	Task	Doc.
WPS followed - Settings on welding equipment - Travel speed - Selected welding materials - Shielding gas type/flow rate - Preheat applied - Interpass temperature maintained (min/max.) - Proper position (F, V, H, OH) - Intermix of filler metals avoided unless approved	O	–	O	–
Use of qualified welders	O	–	O	–
Control and handling of welding consumables - Packaging - Exposure control	O	–	O	–
Environmental conditions - Wind speed within limits - Precipitation and temperature	O	–	O	–

STANDARD QUALITY ASSURANCE PLAN

I. PURPOSE

The Standard Quality Assurance Plan (hereinafter referred to as "Standard QA Plan") for steel moment frames provides specifications, procedures, and illustrative details to comply with the requirements of the 2017 Los Angeles Building Code. The quality assurance requirements described in this Standard QA Plan are intended to promote public safety and welfare by standardizing inspections, tests, and all other applicable measures that ensure substantial compliance with the code performance objectives of steel moment frame connections.

II. HOW TO USE THIS STANDARD QA PLAN

To use the Standard QA Plan, follow the steps outlined below:

1. *Standard QA Plan shall be attached to or incorporated in the structural plan.*
2. *Where the Standard QA Plan is attached to the structural plan, the Engineer of Record shall:*
   a. *Identify the type of steel moment frame to be used in the building or structure by placing an "X" mark in the box below:*

      SPECIAL MOMENT FRAME (SMF)

      INTERMEDIATE MOMENT FRAME (IMF)

      ORDINARY MOMENT FRAME (OMF)

   b. *Place a NOTE on the structural plan stating "All specifications, tables, and notes in the City of Los Angeles' Standard Quality Assurance Plan for Steel Moment Frames shall be part of this approved structural plan."*
   c. *Sign and stamp the Standard QA Plan in the box provided at the lower right corner of each sheet.*
3. *Where the Standard QA Plan is incorporated directly in the structural plan, the Engineer of Record shall place a NOTE on the structural plan to clearly indicate the type of steel moment frame to be used in the building or structure.*
4. *All of the quality assurance requirements listed in the Standard QA Plan shall be applied to special moment frames, intermediate moment frames, and ordinary moment frames, unless noted otherwise herein.*
5. *Organize and submit all reports required in Table 1 on Sheet 2 to the City Building Inspector in a timely manner for review and approval.*
6. *The procedures, specifications and illustrative details as described in the Standard QA Plan shall not exempt the Engineer of Record from using engineering judgment in determining the suitability of applying the Standard QA Plan to any welded connections. Any deviations in the quality assurance requirement as specified in the Standard QA Plan shall comply with Part III Item 5 of the Standard QA Plan.*

III. GENERAL REQUIREMENTS

1. Referenced Documents

The design and construction of steel moment frames shall be in compliance with the following:

a. City of Los Angeles Building Code, 2017 Edition (hereinafter referred to as "LABC").
b. AISC Seismic Provisions for Structural Steel Buildings, Part I dated June 22, 2010 (hereinafter referred to as "AISC Seismic").
c. AWS D1.1/D1.1M:2010 and AWS D1.8/D1.8M:2009 Structural Welding Code - Steel (hereinafter referred to as "AWS").

2. Material Specifications

a. Structural steel shall comply with the following ASTM standard specifications:
   i. Wide flange shapes.....ASTM A36, A529(50), A572(42)(50), A588, A913(50), A992 (50)
      note: minimum yield stress shall not exceed 50 ksi, except column per AISC 341 sec 6.1
   ii. Continuity, doubler and column base plates, shear tabs....i above or ASTM A283/A283M Grade D
   iii. Anchor rods at column base plates..ASTM F1554 or per AISC360-10 A4
   iv. Fabricate and erect structural steel in compliance with the AISC 360-10 "Specification for Structural Steel buildings" (hereinafter referred to as "AISC Specification") .
   v. Steel having dual ASTM designation shall be clearly identified on each specific plan detail.
b. High strength bolts shall comply with the following requirements and ASTM standard specifications:
   i. High strength bolts, nuts, and washers.....ASTM A325, A490
   ii. Installed bolts in accordance with the "Specifications for Structural Joints using ASTM A325 or A490 Bolts."
   iii. Tighten bolts to a snug tight condition then further tighten to the minimum specified tension and verify using a calibrated tension measuring device, Twist-Off and Direct-Tension Indicator methods shall also be permitted
   iv. Slip critical high strength bolts are required.
   v. All faying surfaces of connections with high strength fasteners shall be prepared as required for Class A per the AISC Seismic Section 7.2.
c. Filler metal properties and specifications shall be as follows:
   i. Electrodes shall be of a low-hydrogen type meeting requirement of H-16 as tested in accordance with AWS A4.3 and conforming to AWS specifications as referenced in Table 7 on Sheet 2.
   ii. Filler metals shall be classified for nominal 70 ksi tensile strength.
   iii. The maximum permitted electrode diameter shall be in accordance with Table 5 on Sheet 2.
   iv. Filler metals shall have a minimum Charpy V-Notch (CVN) toughness of 20 ft-lbf at 0°F using AWS A5 classification test methods.
   v. The use of intermixed welds shall not occur unless it can be demonstrated by testing in accordance with AWS Section 4.
   vi. The parameters established by the electrode manufacturer shall be reflected in the approved WPS.
d. Other materials not listed in LABC Chapter 35 are not permitted without specific approval from the Department.

3. Welding Processes

Structural welding shall be limited to the Shielded Metal Arc Welding or Flux Cored Arc Welding processes.

4. Base Metal Repairs or Restorations

Any repair or restoration of base metal shall comply with all of the following:

a. Engineer of Record shall review and approve the WPS for repair procedures prior to welding.
b. Ensure that repair procedures meet the requirements outlined in AWS Section 5.26 and ASTM A6/A6M-02 Section 9.2, 9.3, 9.4 and 9.5.
c. All welding shall be performed using low-hydrogen electrodes or with SMAW using low-hydrogen electrodes.
d. Provide continuous visual inspection by the Deputy Inspector.
e. Provide non-destructive testing upon completion of the repair work.

5. Deviations From the Standard Quality Assurance Plan

Deviations from any part of the Standard QA Plan may be made provided the procedures outlined below are followed:

a. Deviations from the Standard QA Plan must be reviewed and approved by the Engineer of Record.
b. Engineer of Record shall provide alternate procedures, specifications, and/or details to justify the deviations.
c. Submit the proposed deviations from the Standard QA Plan to the Department for review and approval prior to commencement of work.
d. Supplemental testing and additional specifications may be required to justify the deviation.
e. Conformance with all applicable provisions of the LABC, AISC, and AWS is required.

IV. QUALITY ASSURANCE

1. Certification

a. Inspectors shall be LADBS Certified Deputy Inspectors per LABC Section 1704.2 and Information Bulletin P/BC 2011-035 "Regulations Regarding Registration for Deputy and Controlled Activities Inspection." Employment shall be in accordance with Information Bulletin P/BC 2014-034 "Employment and Duties of a Registered Deputy Inspector."
b. Welders shall be LADBS Certified Welders for the Structural Steel classification per LABC Section 2204.1, and Information Bulletin P/BC 2014-045 "Welder Certification Rules and Regulations."
c. Shop welds shall be performed in an LADBS Certified Fabricator's Shop per LAMC Section 96.204(g) and Information Bulletin P/BC 2014-042 "Application for Approval as Fabricator."
d. Technicians performing Non Destructive Testing (NDT) shall be certified for Level II in accordance with ASNT SNT-TC-1A (current edition) by a Testing Agency approved per LAMC Section 98.0503 and Information Bulletin P/GI 2017-028 "Rules and regulations for Recognition of Testing Agencies."

2. Pre-Construction Meeting

a. The Owner (or owner's representative) shall arrange a pre-construction meeting(s) with the Engineer of Record (or Structural Observer designated by the Engineer of Record), the Contractor (or affected Sub-Contractor), and the Deputy Inspector to discuss and review welding procedures, bolting procedures, and inspection requirements for all welding and bolting operations with consideration to minimize welding shrinkage effects including number of welders per deputy inspector
b. The City Building Inspector shall be notified of such meeting(s) and may participate at his/her discretion.
c. Meeting record(s) shall be included in the first report submitted to the City Building Inspector.

3. Structural Observation

Structural observation shall be performed in accordance with Information Bulletin P/BC 2017-024. The Structural Observer shall:

a. Perform structural observation listed in Table 6 on Sheet 2.
b. Perform structural observation prior to placement of decking, covering by fireproofing, encasement in concrete or placement of other finishes.
c. Submit observation report(s) to the City Building Inspector at each stage observed and upon completion of the structural system.
d. State in the report that the steel moment frame system substantially conforms with the approved structural plans and specifications.
e. Use the Department's Structural Observation Report Form to report all observations. Structural Observation Report Form can be obtained at www.ladbs.org, keyword "Information Bulletin P/BC 2017-024".

4. Deputy Inspection

The following are the basic Quality Assurance responsibilities of the Deputy Inspectors:

a. Arrive on the job in sufficient time to verify the permit information, check for prior inspections and/or approvals by the City Building Inspector or previous Deputy Inspectors, check the quality of all materials and become familiar with the approved structural plans and specifications.
b. Verify that structural steel delivered is from a fabricator currently licensed by the Department.
c. Identify material from an offsite fabricator in accordance with LABC Section 2203 and compare to the approved plans and specifications.
d. Verify that each steel piece is labeled with the approved fabricator's shop name and license number.
e. Visual check shop welds and/or non-destructive test, as required, joint preparation, faying surfaces, indentation stamps and color codes of high strength steel, excessive mill scale or lamination, and dimensional conformity with the approved plans which are part of the lateral resisting system.
f. Before any welding begins, inspect joint preparation, fit-up, condition of surfaces to be welded, storage and use of electrodes, current license of all welders, and voltage/amperage of welding machines.
g. Ensure that all welding and inspection activities complies with AWS.
h. Measure voltage/amperages near the arc with a hand held calibrated averaging type meter. The meter shall be calibrated not less than once a year. This equipment shall be used by the Fabricator, Erector, and Deputy Inspector.
i. During welding operation, provide continuous inspection particularly on multiple pass welds to assure that each pass has been prepared correctly, preheat and interpass temperatures are maintained and that finished welds shall be the correct size and without rejectable discontinuities.
j. Mark steel near the weldment to indicate that inspection was made.
k. Verify type and size of bolts and washers, check mill certificates, and verify faying surfaces are free of burrs, scale, rust, grease or anything that may inhibit full contact.
l. Verify connections involving high strength bolts and welds are fabricated per Part III Item 2(b) and 2(c) and erected in a sequence per Part V Item 2, unless specified otherwise by the Engineer of Record.
m. Verify high strength bolts are not welded or damaged by preheating.
n. Verify washers are always installed with all bolts, except A-490 bolts which require washers under both elements.
o. Verify that any deficiency noted in the Structural Observation Report Form has been corrected.
p. Verify that the Engineer of Record has approved the written Welding Procedure Specification (WPS) prepared by the Fabricator or Erector. The WPS shall include the following:
   i. All applicable requirements from the codes, the Standard QA Plan, and any other information necessary to produce the welds.
   ii. List the applicable base metal types and thicknesses.
   iii. List the welding joint detail, including joint type, weld type, joint geometry, and applicable dimensions. Individual weld passes shall be identified in sketches and numbered to identify the sequence of their deposition (see Detail 13 on Sheet 3 for example). The sketches shall identify the maximum layer thicknesses and bead widths. In no case shall layer thicknesses exceed 1/4 inch nor shall the maximum bead widths exceed 5/8 inch.
   iv. List the welding processes.
   v. Specify the required welding positions.
   vi. List the filler metal per AWS for electrode specification and classification (see Table 7 on Sheet 2), as well as information regarding shielding material to be used.
   vii. Indicate the minimum preheat and interpass temperatures (see Table 4 on Sheet 2) and post weld heat treatment per Part V Item 5.
   viii. List all applicable electrical characteristics for the welding process employed. WPS shall clearly indicate the specific values required for each welding pass. These electrical characteristics shall include at minimum the following:
      (1) Electrode diameter (see Table 5 on Sheet 2),
      (2) Type of current, and acceptable ranges of current measured in amperage,
      (3) Voltage,
      (4) Travel speed (range), and
      (5) Amperage, voltage and electrode extension (as applicable) shall be within the filler metal manufacturer's recommendations.
   ix. A copy of the electrode manufacturer's technical information with ID # listed shall be attached to the WPS .
q. Weld joints not conforming to AWS Chapter 3 must be tested by an approved testing agency, accepted by the Engineer of Record, and approved by the Department's Material Control Section before the weld is performed. Material Control Section can be contacted at:
   LADBS Material Control Section
   221 N. Figueroa St., Suite 400
   Los Angeles, CA 90012
   (213) 482-0385 or 1-888-LA-4BUILD
r. Notify the Contractor, Engineer of Record, and City Building Inspector of any deviations or non-compliance with the approved WPS, plans or specifications.
s. "Deputy Inspection Report Form IN.FORM07" shall be submitted on a weekly basis to the City Building Inspector and Engineer of Record, unless determined otherwise by the City Building Inspector.
t. During the execution of the work, the Deputy Inspector shall not undertake or engage in any other task or occupation which will interfere with the proper performance of the duties of such inspection.
w. Visual welding inspections, bolting inspections and other inspections shall be conducted at locations and frequencies as specified in Table 8 on sheet 2 of 3.

5. Electrode Storage and Atmospheric Exposure

a. Electrodes are considered to be exposed to the atmoshpere if:
   i. the manufacturer's sealed electrode containers or packagings are opened or damaged, or
   ii. outside of baking or storage ovens.
b. Modification or lubrication of electrodes are not permitted.
c. Drying of electrodes in baking or storage ovens are permitted as recommended by the manufacturer.
d. Electrodes shall be identified to facilitate monitoring of total atmospheric exposure time.
e. Storage and atmospheric exposure of AWS A5.1-91 and A5.5-96 low-hydrogen SMAW electrodes shall be in accordance with AWS Section 5.3.2.
f. FCAW electrodes not consumed within 24 hrs of accumulated atmospheric exposure time shall not be used. Manufacturer's recommendations that show that drying effectively removes moisture and restores electrodes to their designated diffusible hydrogen levels are permitted.
g. FCAW electrode welding suspended more than 8 hrs shall be removed from the machines and stored in an electrode wire baking or storage oven maintained at a temperature between 250° and 550°F, or as recommended by the electrode manufacturer.

6. Plastic Hinging Zone Protection

a. The plastic hinging zone shall be identified diagrammatically, as illustrated in Detail 15 on Sheet 3, on the structural plans by the Engineer of Record.
b. The Engineer of Record and Contractor shall be responsible for reviewing shop drawings of ALL relevant trades to ensure compliance. This shall be discussed and documented in pre-construction meetings.
c. The Contractor shall be responsible for developing a program to ensure that all workers on the project, including their subcontractors, are aware of and understand this requirement. Failure to comply with these requirements may cause the replacement of steel.
d. Plastic hinging zones shall be defined by permanent markings such as paint or ink.
e. A note, as illustrated in Detail 15 on Sheet 3, shall be prominently placed on the structural plans (general note sheet and adjacent to moment frame detail) and the construction documents of ALL trades.
f. Welded, bolted, screwed, or shot-in (powder driven) attachments for perimeter edge angles, shear studs, exterior facades, partitions, duct work, piping, or other connections shall not be permitted within the plastic hinging zones.
g. Any penetrations or damage from temporary welded attachments within the plastic hinging zones shall be repaired as required by the Engineer of Record and comply with Part III Item 4.
h. Initially, the plastic hinging zone "Warning Sign", as illustrated in Detail15 on Sheet 3, may be temporary. However, the temporary "Warning Sign" shall be replaced by a permanent "Warning Sign" before project completion. This sign and identification of the plastic hinging zone shall be maintained during construction; and may require repair after operations such as fireproofing.
i. Signs shall be affixed to the beam and located within the plastic hinging zone. The City Building Inspector may accept alternate methods of attaching the "Warning Sign" to the plastic hinging zones.

7. Additional Charpy V-Notch Toughness

a. Demand Crital Welds

For steel frame with service temperature at 50°F or higher welds at the locations indicated below shall be made with filler metal having a CVN toughness of 20 ft-lbf at -20°F AND 40 ft-lbf at 70°F as determined by test procedure prescribed in the AISC Seismic Sec.9.1-5 "Weld Metal / Welding Procedure Specification Toughness Verification Test."

For steel with service temperature below 50°F , the qualification temperature for AISC Seismic Provision Appendix X shall be 20°F above the lowest anticipated service temperature or at a lower temperature.

   i. Beam flanges to columns,
   ii. Single plate shear connections to columns,
   iii. Beam webs to columns, and
   iv. Column splices.
   v. Column bases

b. Heavy Section CVN Requirements

For structural steel in the SLRS, in addition to the requirements of AISC Specification Section A,3,1c, hot rolled shapes with flanges 1½ in. thick and thicker shall have a min. CVN toughness of 20 ft-lb at 70°F, tested in the alternate core location as described in ASTM A6 Supplemental Requirement S30. Plates 2 in. thick and thicker shall have min. CVN toughness of 20 ft-lb at 70°F, measured at any location permitted by ASTM A673, where the plate is used in the following:

   i. Member built-up from plate
   ii. Connection plates where inelastic strain under seismic loading is expected.

8. Non-Destructive Testing (NDT) Requirements

The following NDT requirements, which shall be considered as a minimum, are to be included in the Quality Assurance Agency Document(s)(see part 1, IV 9 below)

a. The minimum non-destructive testing at each weld joints or parts shall be conducted at the locations and frequencies as specified in Table 2 and Table 3 on Sheet 2 respectively.
b. A copy of each NDT report shall be provided to the Contractor, Engineer of Record, Deputy Inspector, and City Building Inspector with the following information:
   i. Document the accepted and rejected welds, parts, or joints.
   ii. Identify the tested weld by piece mark and location in the piece.
   iii. Identify the tested weld location in the structure.
c. NDT Technician shall perform the following tasks:
   i. Coordinate the NDT scope and schedule with the Deputy Inspector.
   ii. Perform NDT in a timely manner (so as not to hinder construction work) and to detect welding problems soon after occurrence so that corrective measures can be taken by the Contractor.
   iii. Mark the inspected and accepted welds, parts, and joints with a distingquishing mark or die stamp.
d. Reduction Rate for NDT
   i. The rate of UT testing on CJP groove welds may be reduced if approved by the Engineer of Record and the Department, except no reduction is permitted for demand critical welds. Where the initial rate for UT is 100%, the NDT rate for an individual welder or welding operator is permitted to be reduced to 25%, provided the reject rate, the number of welds containing unacceptable defects divided by the number of welds completed, is demonstrated to be 5% or less of the welds tested for the welder or welding operator. A sampling of at least 40 completed welds for a job shall be made for such reduction evaluation. For evaluating the reject rate of continuous welds over 3 ft in length where the effective throat is 1 in. or less, each 12 in. increment or fraction thereof shall be considered as one weld. For evaluating the reject rate on continuous welds over 3 ft in length where the effective throat is greater than 1 in., each 6 in. of length or fraction thereof shall be considered one weld.
   ii. The rate of MT testing on CJP groove welds may be reduced if approved by the Engineer of Record and the Department. The MT rate for an individual welder or welding operator may be reduced to 10%, provided the reject rate is demonstrated to be 5% or less of the welds tested for the welder or welding operator. A sampling of at least 20 completed welds for a job shall be made for such a reduction evaluation. This reduction is not permitted on welds in the k-area, at repair sites, weld tab and backing removal sites and access holes.
   iii. Reject rate shall mean the number of welds containing rejectable defects divided by the number of welds completed.

9. Quality Assurance Agency Documentations

   i. Submit Fabricator and Erector Document for review by EOR prior to fabrication erection per AISC 341-10 Sec J2.
   ii. Submit Quality Assurance Agency Document to EOR, owner, and City Building Inspector per AISC 341-10 Sec J3.
   iii. The reports listed in Table 1 on Sheet 2 shall be submitted to the City Building Inspector in a timely manner.
   iv. The requirements stated in Section 8 are to be included in the Quality Assurance Agency Document(s)

V. WELDING PROCEDURES

1. Bottom Beam Flange Moment Connection Welding

Where welding of the bottom beam flange to the column flange is in the flat welding position, welding shall be completed with the following sequence:

a. Start welding from Side A (one side of the beam) with a maximum 1/4 inch thick root pass beyond the center of the joint on Side B (other side of the beam), reaching past the beam web through the weld access hole.
b. After the arc is initiated, electrode travel shall progress toward the edge of the Side A beam flange, terminating on the Side A weld tab.
c. The SideA root pass, and root pass deposit on SideB, shall be thoroughly cleaned to allow Deputy Inspector to verify the resulting bead profile is suitable for obtaining good fusion by the subsequent root pass to be initiated from SideB. If the profile is not conducive to good fusion, the start of the first root pass shall be gounded,gouged,chipped,orotherwise prepared to ensure adequate profile to achieve fusion.
d. Complete the root pass on Side B before any other weld passes are performed.
e. The arc shall be initiated at the start of the first Side A root pass, and electrode travel shall progress toward the edge of the Side B beam flange, terminating on the Side B weld tab.
f. The above sequence shall be repeated for subsequent weld layers, and each weld layer shall be completed on both sides of the joint before a new layer is deposited,For each layer, the weld starts and stops shall be on opposite side of beam web,as compare to previous layer. The order of operations (Side A, then Side B, or vice versa) is not restricted and may vary for each weld layer. Weld passes shall be placed in horizontal layers. Each pass shall be thoroughly cleaned of slag and wire brushed. Each pass shall be visually inspected by the Deputy Inspector, as described above in Step (c). An alternate welding sequence may be made provided Contractor submits in writing analternate sequence that is approved by the Engineer of Record and complies with the requirements of Part III Item 5 of the Standard QA Plan.

2. Sequence for Welding at Multiple Locations

When welding occur at multiple locations of welded steel moment frame connections, the following sequence shall be followed:

a. Weld both top and bottom beam flanges prior to any supplemental welding to the beam web or shear tab.
b. Engineer of Record shall review and approve all field welding sequences prior to the start of work.
c. Field welding of web shear plates with bolts shall occur after field welding of beam flanges to column flange.
d. High strength bolts shall be in the snug tight condition prior to welding.
e. Notwithstanding AISC Steel Construction Manual Specification Section J1.10 to the contrary, high strength bolts shall be fully tensioned upon completion of all welding activities.

An alternate sequence of welding may be made provided the Contractor submits in writing, the alternate sequence minimizes residual stresses and is approved by the Engineer of Record.

3. Welding Technique

a. Stringer beads shall be used during all welding operations. Maximum bead width, bead thickness, and layer thickness shall be considered. Weaving is not permitted, except when the WPS approved by the Engineer of Record limits electrode oscillation transverse to the weld axis to a maximum of:
   i. 3d for 1G/1F, 2G/2F, and 4G/4F weld positions, or
   ii. 5d for the 3G/3f position, where d = electrode diameter.
b. Welding layers should progress from the face of the column flange outward toward the groove face of the beam flange as illustrated in Detail 13 on Sheet 3.

4. Preheat and Interpass Temperature

a. The minimum preheat and interpass temperature requirements in Table 4 of Sheet 2 shall be observed. Special attention shall be given to AWS Section 3.5.1 and Section 5.6 for the thickness of the base metal to be welded.
b. Preheat and all subsequent interpass temperatures shall be maintained during the welding operation for a distance at least equal to the thickness of the thicker welded part, but not less than 3", in all directions from the point of welding.
c. Where base metals are of different thickness, the higher minimum preheat and interpass temperature requirements of the thicker plate shall govern.
d. Maximum preheat and interpass temperature shall not exceed the lesser of:
   i. 550°F, or
   ii. The maximum temperature recommended by the manufacturer.

5. Post Weld Heat Treatment

Unless specified otherwise in an approved WPS, the minimum post weld heat treatment shall be provided as follows:

a. Apply temperature in the 400°F to 600°F range immediately after completion of welding to prevent the weld metal from cooling below the minimum preheat and interpass temperature.
b. Maintain temperature for approximately 1 hour per inch of thickness of weld metal or 2 hours, whichever is less.
c. Conditions specified in AWS Section 3.14 and Section 5.8 should carefully be considered when applying post weld heat treatment.

Alternatively, the use of insulating blankets after the completion of welding in lieu of post weld heat treatment may be permitted to control the cooling of the welded connection to ambient temperature if recommended by the Engineer of Record and approved by the City Building Inspector; unless required otherwise by an approved WPS.

VI. WELDING AND FABRICATION DETAILS

1. Base Metal Joint Preparation

a. Base metal preparation shall be in comply with AWS Section 5.15.
b. All beam flange to column flange welds are to be made with an AWS prequalified CJP groove welded joint detail.
c. Bevel, fit-up and detail tolerances shall be as required by the selected prequalified welded joint detail.
d. Whenever possible, use the AWS prequalified CJP groove welded joint detail as illustrated in Detail 14 on Sheet 3 and the following:
   i. Use single bevel CJP groove welds made with a 30° groove angle or double bevel CJP groove welds when flange thickness exceed 1-1/2 inch.
   ii. "As Fit-Up" and "As Detailed" shall be the maximum tolerances.
   iii. Meet all prequalified WPS variables in Table 5 on Sheet 2.

2. Weld Access Hole

a. Where weld access holes are provided, they shall be detailed as illustrated in Detail 12 on Sheet 3.
b. Notches and gouges shall be repaired following a WPS approved by ther Engineer of Record.
c. Weld access holes shall be prepared by grinding to a suitable finish in accordance with AISC Specification Section J1.6 and provided with a minimum radius of 3/8 inch as illustrated in Detail 12 on Sheet 3.

3. Backing Bar

a. Backing bar used in connections with a CJP groove weld of beam flange to column flange shall be removed except that top flange backing bar attached to the column by a continuous fillet weld on the edge below thee CJP groove weld need not be removed.
b. Following removal of backing bar, the root pass shall be backgouged to sound weld metal, and back welded. A reinforcing fillet weld with a minimum leg size of 5/16 inch or the root opening plus 1/16 inch, whichever is larger, shall be provided. The reinforcing fillet weld need not be grounded.

NOT FOR CONSTRUCTION

09.AUG.21

belzberg architects
2321 MAIN STREET
SANTA MONICA, CA 90405
310.453.9611
www.belzbergarchitects.com

ARUP
Arup North America Ltd.
900 Wilshire Boulevard,
19th Floor
Los Angeles CA 90017
Tel: 310 578 4400
www.arup.com

#	DESCRIPTION	DATE

MOMENT FRAME DETAILS - LADBS QUALITY ASSURANCE SHEET 1 OF 3

PROJECT NUMBER:

S005

8/10/2021 5:29:13 PM

CONTINUED FROM SHEET 1

c. When backing bar is other than AWS Table 3.1 and Section 5.2.2 approved base metal is used, the following shall apply:
   i. Ceramic, flux or glass tape may be used provided the manufacture's recommendations are followed.
   ii. When a non-metallic backing bar is used, the WPS and the Welder shall be qualified using the type of backing bar intended for welding.
   iii. Nonferrous metallic (e.g. copper) backing materials are not permitted.

1. Weld Tab
a. Weld tabs shall be aligned parallel to the joint preparation.
b. No weld dams are allowed.
c. Weld tabs shall extend beyond the edge of the joint a minimum distance equal to the part thickness, but not less than one inch nor exceed two inches.
d. Weld tab shall be removed upon completion of the welded joint as follows:
   i. No more than 1/8 inch beyond the edge of the joint shall remain, except at continuity plate where up to 1/4 inch is acceptable.
   ii. Edges of the weld tab shall be finished to a surface roughness value of 500 micro inch or better. Grinding to a flush condition is not required.
e. Gouges and notches are not permitted. The transitional slope of any area where gouges and notches have been removed shall not exceed 1:5.
f. Material removed by grinding that extends more than 1/16 inch below the surface of the base metal shall be filled with weld metal. The contour of the weld at the ends shall provide a smooth transition, free of notches and sharp corners.

5. Continuity Plate
a. Continuity plates shall be detailed as illustrated in Detail 11 on Sheet 3.
b. The weld attaching the continuity plate to the column flange shall be as follows:
   i. Use a CJP groove weld for the full length of the groove preparation.
   ii. When backing bars are omitted, the root shall be backgouged and back welded.
   iii. When backing bars are used and remain in place, backing bars shall be attached to the column flanges with a reinforcing fillet weld.
   iv. Fillet weld shall not be used to connect backing bars to continuity plates.
   v. The fillet weld size need not exceed the minimum size requirements of AWS Table 5.8.
c. Weld terminations near the end of the column flange tips may be completed using weld tabs as follows:
   i. Weld tabs may be steel or nonfusible material.
   ii. Weld terminations near the radius of the column need not be made using weld tabs. The use of small nonfusible weld tabs to assist in weld terminations is permitted.
   iii. Weld tabs shall be removed following completion of welding.
d. Continuity plates may be welded to the column web with groove welds, fillet welds, or a combination of the two. Fillet welds shall terminate a minimum distance of 1/4 inch from each end of the joint.

6. Doubler Plate
Web doubler plates, as illustrated in Detail 2, 3, or 4 on Sheet 3, shall be welded using either Detail 5, 6, or 7 on Sheet 3.

7. Requirements for "k" Area
Welds shall terminate short of the "k" area for continuity plates as illustrated in Detail 11 on Sheet 3.

8. Tack Welds
i. Tack welds attaching backing bars and weld tabs shall be placed where they will be incorperated into the final weld.
ii. Tack welds shall be subject to the same welding procedure requirements as thefinal welds including preheat requirements.
iii. Tack welds are fully inspected prior to install the final welds.

VII. EXEMPTIONS

1. Reduction from certain quality assurance components of this Standard QA Plan, as listed in Part VII Item 2, are permitted for the following buildings or structures:
   a. One or two family dwellings not more than 1 story in height and 2,500 sf of floor area,
   b. Buildings or structures accessory to residential uses (such as carport, storage, garage), and
   c. Miscellaneous structures (such as walkway, canopy, patio cover, gazebo, storage rack).

2. Buildings or structures, as listed in Part VII Item 1, are exempt from providing the following quality assurance components:
   a. Electrode Storage and Atmospheric Exposure, Part IV Item 5(f) and 5(g).
   b. Plastic Hinging Zone Protection, Part IV Item 6.
   c. Additional CVN Notch Toughness Testing, Part IV Item 7.
   d. Non-Destructive Testing, Part IV Item 8.
   e. Preheat and Interpass Temperature, Part V Item 4.
   f. Post Weld Heat Treatment, Part V Item 5.

NOTE : (Refer to AISC 341-10 Section J, "COPY RIGHT © Amerian Institute of Steel Construction. Reprint with permission. All right reserved")

The following entries are used in the tables:
- Observe (O) - The inspector shall observe these functions on a random, daily basis. Welding operations need not be delayed pending observations.
- Perform (P) - These inspections shall be performed prior to the final acceptance of the item. Where a task is noted to be performed by both OC and OA, it shall be permitted to coordinate the inspection function between QC and QA so that the inspection functions need be performed by only one party. Where QA is to rely upon inspection functions performed by QC, the approval of the engineer of record and the authority having jurisdiction is required.
- Document (D) - The inspector shall prepare reports indicating that the work has been performed in accordance with the contract documents. The report need not provide detailed measurements for joint fit-up, WPS settings, completed welds, or other individual items listed in the Tables of 8-a, 8-b, 8-c. For shop fabrication, the report shall indicate the piece mark of the piece inspected. For field work, the report shall indicate the reference gride lines and floor or elevation inspected. Work not in compliance with the contract documents and wether the noncompliance has been satisfactorily repaired shall be noted in the inspection report.

Table 8-a Location and Frequencies of bolting inspections

Inspection Tasks Prior to Bolting	QC Task	QC Doc.	QA Task	QA Doc.
Proper bolt selected for the joint detail	O	-	O	-
Proper bolting procedure selected for joint detail	O	-	O	-
Connecting elements are fabricated properly, including the appropriate faying surface condition and hole preparation, if specified, meets appliable requirements	O	-	O	-
Pre-installation verification testing conducted for fastener assemblies and method used.	P	D	O	D
Proper storage provided for bolts, nuts, washers, and other fastener components.	O	-	O	-
Inspection Tasks During Bolting	**QC Task**	**QC Doc.**	**QA Task**	**QA Doc.**
Fastener assemblies placed in all holes and washers (if required) are properly positioned	O	-	O	-
Joint bought to a snug tight condition prior to pretensioning operation	O	-	O	-
Fastener component not turned by the wrench prevented from rotating	O	-	O	-
Bolts are pretensioned progressing systematically from most rigid point toward free edges	O	-	O	-
Inspection Tasks After Bolting	**QC Task**	**QC Doc.**	**QA Task**	**QA Doc.**
Document accepted and rejected connections	P	D	P	D

Table 8-b Location and Frequencies of welding inspections

Visual Inspection Tasks Before Welding	QC Task	QC Doc.	QA Task	QA Doc.
Material Identification (Type/Grade)	O	-	O	-
Welder identification system	O	-	O	-
Fit-up of Grove Welds (including joint geometry) - Joint preparation - Dimensions (alignment, root opening, root face, bevel) - Cleanliness (condition of steel surface) - Tacking (tack weld quality and location) - Backing type and fit (if applicable)	P/O**	-	O	-
Configuration and finish of access holes	O	-	O	-
Fit-up of fillet welds - Dimensions (alignment, gaps at root) - Cleanliness (condition of steel surfaces) - Tacking (tack weld quality and location)	P/O**		O	

** Following performance of this inspection task for ten welds to be made by a given welder, with the welder demonstrating adequate understanding of the requirements and possession of skills and tools to verify these items, the Perform designation of this task shall be reduced to Oberve, and the welder shall perform this task. Should the inspector determine that the welder has discontinued adequate performance of this task, the task shall be returned Perform until such time as the inspector has reestablished adequate assurance that the welder will perform the inspection tasks listed.

Visual Inspection Tasks During Welding	QC Task	QC Doc.	QA Task	QA Doc.
WPS followed - Settings on welding equipment - Travel Speed - Selected welding materials - Shielding gas type/flow rate - Preheat applied - Interpass temperature manitained (min./max.) - Proper position (F,V,H,OH) - Intermix of filler metals avoided unless approved	O	-	O	-
Use of qualified welders	O	-	O	-
Control and handling of welding consumables - Packaging - Exposure control	O	-	O	-
Envirnoment conditions - Wind speed within limits - Precipitation and temperature	O	-	O	-
Welding techniques - Interpass and final cleaning - Each pass within profile limitations - Each pass meets quality requirements	O		O	
No welding over cracked tacks	O	-	O	-
Visual Inspection Tasks After Welding	**QC Task**	**QC Doc.**	**QA Task**	**QA Doc.**
Welds cleaned	O	-	O	-
Verify size, length, and location of welds	P	-	P	-
Visually inspect welds to acceptance criteria - Crack prohibition - Weld/base-metal fusion - Crater cross-section - Weld profiles - Weld size - Undercut - Porosity	P	D	P	D
Placement of reinforcing or contouring fillet welds (if required)	P	D	P	D
Backing removed, weld tabs removed and finished, and fillet welds added (if required)	P	D	P	D
Repair activities	P	-	P	D

Table 8-c Location and Frequencies of other inspections

Other Inspection Task	QC Task	QC Doc.	QA Task	QA Doc.
Reduced beam section (RBS) requirements, if appliable - contour and finish - dimensional tolerances	P	D	P	D
Protected zone - no holes and unapproved attachments made by fabricator or erector, as applicable	P	D	P	D

Table 5. PREQUALIFIED WPS REQUIREMENTS (1, 2, 3)

VARIABLE	POSITION OF WELD	WELD TYPE	SMAW	FCAW
Maximum Electrode Diameter	Flat (F)	Fillet (4)	5/16 in.	1/8 in.
		Groove (4)	1/4 in.	
		Root Pass	3/16 in.	
	Horizontal (H)	Fillet	1/4 in.	1/8 in.
		Groove	3/16 in.	
	Vertical (V)	All	3/16 in.	3/32 in.
	Overhead (OH)	All	3/16 in.	5/64 in.
Maximum Current	All	Fillet	Within the range of recommended operation by the filler metal manufacturer and a WPS approved by engineer of record.	Within the range of recommended operation by the filler metal manufacturer and a WPS approved by engineer of record.
	All	Groove weld root pass with opening		
		Groove weld root pass without opening		
		Groove weld fill passes		
		Groove weld cap pass		
Maximum Root Pass Thickness (5)	Flat (F)	All	3/8 in.	3/8 in.
	Horizontal (H)		5/16 in.	5/16 in.
	Vertical (V)		1/2 in.	1/2 in.
	Overhead (OH)		5/16 in.	5/16 in.
Maximum Fill Pass Thickness	All	All	3/16 in.	1/4 in.
Maximum Single Pass Fillet Weld Size (7)	Flat (F)	Fillet	3/8 in.	1/2 in.
	Horizontal (H)		5/16 in.	3/8 in.
	Vertical (V)		1/2 in.	1/2 in.
	Overhead (OH)		5/16 in.	5/16 in.
Maximum Single Pass Layer Width	All	Root opening >1/2 in.	Not applicable.	Split layers
		Any layer of width w		(6)

NOTES:
1. Applicable provisions of AWS D1.1/D1.1M:2010 Section 3 "Prequalification of WPSs" must be maintained for prequalified status of SMAW and FCAW WPSs.
2. Refer to Detail 13 on Sheet 3 for diagram of weld pass sequence.
3. Reproduced with permission from the American Welding Society (AWS), Miami, FL USA - AWS D1.1/D1.1M: 2010 Table Table 3.7 "Prequalified WPS Requirements".
4. Except root passes.
5. See AWS D1.1/D1.1M:2010, Section 3.7.2, for width-to-depth limitations.
6. In the F, H, or OH positions for nontubulars, split layers when the layer width w > 5/8 inch. In the V position for nontubulars or the F, H, V, OH positions for tubulars, split layers when the width w > 1 inch.
7. See AWS D1.1/D1.1M:2010 Sec. 3.7.3 for requirements for welding unpainted and exposed ASTM A588

Table 6. STRUCTURAL OBSERVATION CHECKLIST

STRUCTURAL OBSERVATION PROGRAM (Steel Moment Frame for Seismic Application)
☐ Orientation and placement of connected components.
☐ Removal of backing bars, as required on the plans.
☐ Removal of runoff tabs, as required on the plans.
☐ Presence of continuity plates, as required on the plans.
☐ Presence of doubler plates, as required on the plans.
☐ Configuration and finish of weld access holes, if applicable.
☐ Contour of RBS profile, if applicable.
☐ Verify that no welded attachments occur in the plastic hinging region.
☐ Review NDT and deputy inspection reports for general compliance.

NOTES:
1. Weld qualities shall be verified by the Deputy Inspector.
2. The structural observations listed in this Table are in addition to the structural observations that may be required on the structural plans.

Table 7. PREQUALIFIED BASE METAL - FILLER METAL COMBINATIONS FOR MATCHING STRENGTH (1, 2, 3, 4)

BASE METAL		FILLER METAL		
Group	Steel Specification	Welding Process	AWS Electrode Specification	Electrode Classification
I	ASTM A36 < 3/4 in. ASTM A53 (Grade B) ASTM A500 (Grade B or C) ASTM A 501	SMAW	A5.1	E70XX
			A5.5 (6)	E70XX-X
		FCAW	A5.20 (5)	E7XT-X, E7XT-XM
			A5.29 (6)	E7XTX-X, E7XTX-XM
II	ASTM A36 ≧ 3/4 in. ASTM A529 ASTM A572, A588 ASTM A913 ASTM A992, A1011HSLAS	SMAW	A5.1	E7015, E7016, E7018, E7028
			A5.5 (6)	E7015-X, E7016-X, E7018-X
		FCAW	A5.20 (5)	E7XT-X, E7XT-XM
			A5.29 (6)	E7XTX-X, E7XTX-XM
RELATIONSHIP	**BASE METAL(S)**		**FILLER METAL STRENGTH RELATIONSHIP REQUIRED**	
Matching	Any steel to itself or any steel to another in the same group		Any filler metal listed in the same group	
	Any steel in one group to any steel in another		Any filler metal listed for a lower strength group [SMAW electrodes shall be the low-hydrogen classification]	
Under-Matching	Any steel to any steel to any group			

NOTES:
1. The base metal/filler metal strength relationships above shall be used to determine whether matching or under-matching filler metals are required. Refer to AWS D1.1/D1.1M:2010, Section 3.3.
2. Preheating of joints involving base metals of different groups shall be in conformance with the requirements applicable to the higher strength group.
3. When welds are to be stress-relieved, the deposited weld metal shall not exceed 0.05 percent vanadium.
4. Reproduced with premission from the American Welding Welding Society (AWS), Miami, FL USA - AWS D1.1/D1.1M:2010 Table 3.1 "Prequalified Base Metals-Filler Metal Combinations for Matching Strength".
5. FCAW electrodes with the -2, -2M, -3, -10, -13, -14, -GS suffix shall be excluded and electrodes with the -11 suffix shall be excluded for thicknesses greater than 1/2 in.
6. Filler metals of alloy group B3, B3L, B4, B4L, B5, B5L, B6, B6L, B7, B7L, B8, B8L, B9 E9015-C5L, E9015-D1, E9018-D1, E9018-D3 or any BXH grade in AWS A5.5, A5.23, A5.28 or A5.29 are not prequalified for use in the as-weld condition.

Table 1. REPORTS TO BE SUBMITTED TO THE CITY BUILDING INSPECTOR

	PREPARED BY	TYPE OF REPORT
1.	Structural Observer(s)	Structural Observation Reports
2.	Deputy Inspector(s)	Deputy Inspection Reports
3.	NDT Technician(s)	Non-Destructive Testing Reports

Table 2. NON-DESTRUCTIVE TEST LOCATIONS

	REQUIRED LOCATIONS	Test Frequency
1.	**CJP Groove Weld** Ultrasonic test shall be performed on all CJP groove welds in materials 5/16 inch (8 mm) thick or greater. In addition, magnetic particle test shall be performed on all beam-to-column CJP groove welds.	A
2.	**"k" Area** When welding of doubler plates, continuity plates, or stiffeners has been performed in the k-area, the web shall be tested for cracks using magnetic particle testing. The magnetic particle test area shall include the k-area base metal within 3 in. (75 mm) of the weld.	B
3.	**Beam Cope and Access Hole** At welded splices and connections, thermally cut surfaces of beam copes and access holes shall be tested using magnetic particle testing, when flange thickness exceeds 1-1/2 in. for rolled and built-up shapes.	B
4.	**Reduced Beam Section Repair** Magnetic particle testing shall be performed on any weld and adjacent area of the RBS plastic hinge region that has been repaired by welding, or on the base metal of the RBS plastic hinge region if a sharp notch has been removed by grinding.	B
5.	**Base Metal Lamellar Tearing and Laminations at CJP Groove Weld** Base metal thicker than 1-1/2 in. (38 mm) shall be ultrasonically tested for discontinuities behind and adjacent to the fusion line when the base metal is loaded in tension in the through thickness direction in tee and corner joints and the connected material is greater than 3/4 in. (19 mm). Any base metal discontinuities found within t/4 of the steel surface shall be accepted or rejected on the basis of criteria of AWS D1.1 Table 6.2, where t is the thickness of the part subjected to the through-thickness strain.	A*
6.	**End of Weld at Weld Tab Removal Site** Magnetic particle testing shall be performed on the end of welds from which the weld tabs have been removed, except for continuity plate weld tabs.	B
7.	**PJP Groove Weld** Ultrasonic testing shall be performed on PJP groove welds used in column splices with an effective throat of 3/4 in. (19,1 mm) thick or greater.	B

NOTE: 1) A, and B are the frequencies of non-destructive tests listed in Table 3.
2) Non-destructive testing of welds shall be performed by quality assurance personnel
3) UT shall be performed according to procedures described in Appendix W Sec. W4.1 of AISC 341-10
4) MT shall be performed according to procedures described in Appendix W Sec. W4.2 of AISC 341-10
* Ultrasonic Test only

Table 3. NON-DESTRUCTIVE TEST FREQUENCY

	Frequency Designation A	Frequency Designation B
Ultrasonic Testing (UT)	100% of joints	0% of joints
Magnetic Particle Testing (MT)	25% of joints	100%of joints

NOTES:
1. Refer to Table 2 for locations of non-destructive testing.
2. Rate of non-destructive testing may be reduced as permitted in Sheet 1, Part IV, Item 8(d).
3. No reduction is permitted for demand critical welds for Ultrasonic Testing.
4. No reduction is permitted for welds in the k-area, at repair sites, backing removal sites, and access holes for Magnetic Particle Testing.

Table 4. PREQUALIFIED MINIMUM PREHEAT AND INTERPASS TEMPERATURE

STEEL SPECIFICATION	WELDING PROCESS	THICKNESS OF THICKEST PART AT POINT OF WELDING (in.)	MINIMUM PREHEAT AND INTERPASS TEMPERATURE (°F)
ASTM A36 ASTM A572 Grade 50 ASTM A913 Grade 50 ASTM A992	SMAW with low-hydrogen electrodes, FCAW	1/8 to 3/4 incl.	32
		Over 3/4 to 1-1/2 incl.	50
		Over 1-1/2 to 2-1/2 incl.	150
		Over 2-1/2	225

NOTES:
1. Surfaces to be welded and surfaces adjacent to welds shall be free of moisture pursuant to AWS D1.1/D1.1M:2010 Section 5.15. Use a higher preheat temperature from this Table to remove moisture.
2. Reproduced with permission from the American Welding Society (AWS), Miami, FL USA - AWS D1.1/D1.1M:2010 Table 3.2 "Prequalified Min. Preheat and Interpass Temperature",
3. The minimum preheat or interpass temperature applied to a joint composed of base metals with different minimum preheats (based on Category and thickness) shall be the highest of these minimum preheat temperatures.

NOT FOR CONSTRUCTION

09.AUG.21

belzberg architects
2321 MAIN STREET
SANTA MONICA, CA 90405
310.453.9611
www.belzbergarchitects.com

ARUP
Arup North America Ltd.
900 Wilshire Boulevard,
19th Floor
Los Angeles CA 90017
Tel: 310 578 4400
www.arup.com

#	DESCRIPTION	DATE

MOMENT FRAME DETAILS - LADBS QUALITY ASSURANCE SHEET 2 OF 3

PROJECT NUMBER:

S006

8/10/2021 5:29:13 PM

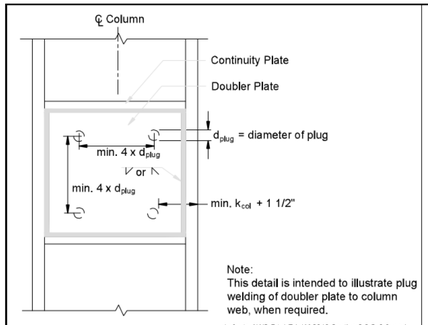

Note:
This detail is intended to illustrate plug welding of doubler plate to column web, when required.

(refer to AWS D1.1/D1.1M:2010 Section 2.3.5, 2.9, and 3.10 for minimum plug weld requirements)

Plug Welding of Doubler Plate to Column — Detail 16
Scale: Not to Scale

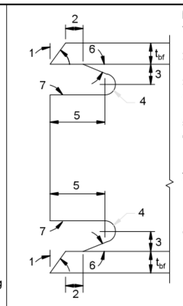

Notes:
1. Bevel as required by a selected AWS prequalified CJP groove welded joint detail.
2. Larger of t_{bf} or 1/2" (plus 1/2 t_{bf} , or minus 1/4 t_{bf}).
3. 3/4 t_{bf} to t_{bf}, 3/4" minimum (± 1/4").
4. 3/8" minimum radius (plus not limited, or minus 0).
5. 3 t_{bf}(±1/2").
6. Tolerances shall not accumulate to the extent that the angle of the access hole cut to the flange surface exceed 25°.
7. Weld access hole shall be ground smooth to a surface roughness value not to exceed 500 micro inch; and shall be free of notches and gouges.
8. This detail is required for FR (fully restrained) connection for OMF per AISC 341-10 seismic provisions sec. E1 where weld access holes are provided.

Alternative Weld Access Hole Detail — Detail 12
(Required per AISC 341-10 Sec E1, for OMF application, may use as alternative for RBS application per AISC 358-10 Sec 5.8/ CS.5)
Scale: Not to Scale

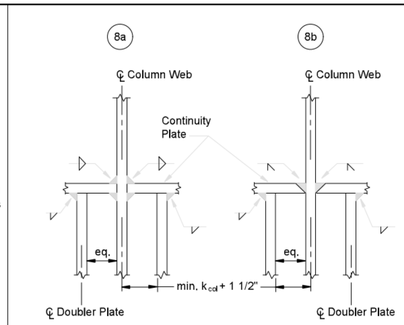

Doubler Plate Welds to Continuity Plate — Detail 8
Scale: Not to Scale

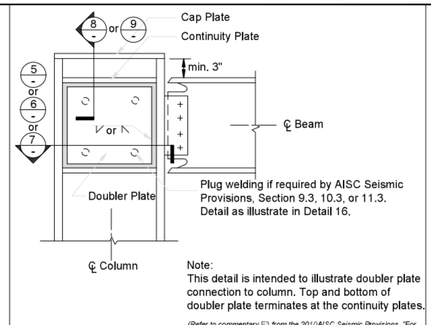

Note:
This detail is intended to illustrate doubler plate connection to column. Top and bottom of doubler plate terminates at the continuity plates.

(Refer to commentary E3 from the 2010AISC Seismic Provisions, "For Structural Steel Buildings")

Web Doubler Plate Detail — Detail 4
Scale: Not to Scale

TYPICAL SHEET 3 GENERAL NOTES:

1. The illustrative details provided herein are intended to highlight the minimum fabrication and welding details that should be reflected on the structural plan. It shall not be used as a substitute for or in lieu of structural details that the Engineer or Architect of Record must provide on the structural plan.
2. These illustrative details do not provide information such as, but not limited to, size of columns or beams, continuity or doubler plate thicknesses, size and length of the fillet welds, the type of beam to column moment connections, locations of all seismic demand welds, location od all required lateral braces, steel column frame to foundation connections, or length and location of plastic hinging zones. This information shall be determined by the Engineer or Architect of Record and specified on the structural plan.
3. Where the illustrative details provide information such as weld type to use at a particular weld joint, minimum or maximum dimensions for length, weld size, or gap between base metals, it should be appropriately reflected on the structural plan by the Engineer or Architect of Record.
4. Engineer of Record shall indicate on this plan which Weld Access Hole detail to be used. See Detail 12 and 17 of Sheet 3

Typical Sheet 3 Notes
Scale: Not to Scale

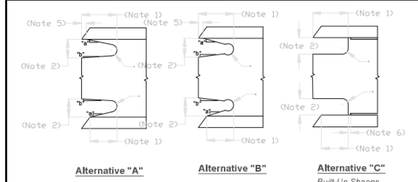

Notes: These are typical details for joints welded from one side against steel backing (tw=thickness of material in which the hole is made)
(1) Width: Greater of 1.5 x tw or 1½ in. Tolerance is +- 1/4 in.
(2) Height : Greater of 1.5 tw or 1 in. but need not exceed 2 in.
(3) R : ⅜ in. min. Grind the thermally cut surface of access holes in heavy shapes as defined in Section A.3.1c and A.3.1d (2010 AISC Seismic provisions). For heavy section as defined in A3.1c and A3.1d, the thermally cut surface of beam copes and weld access holes shall be ground to bright metal and inspected by either magnetic particle or dye penetrant methds prior to deposition of spice welds.
(4) Slope "a" forms a transition from the web to the flange. Slope "b" may be horizontal.
(5) The bottom of the top is to be contoured to permit the light fit of backing bars where they are to be used.
(6) The web-to-flange weld of built-up members is to be held back a distance of at least the weld size from the edge of the access hole.
(Refer to AISC 360-10 Specification for Structural Steel Buildings fig. C-J1.6, Weld Access Hole Geometry)

Weld Access Hole Detail — Detail 17
(Required per AISC 358-10 Sec 5.8/CS.5 for RBS application, may use detail 12 as alternative)
Scale: Not to Scale

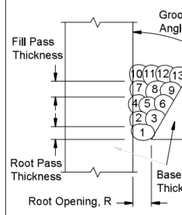

Notes:
1. For maximum fill pass thickness, see Table 5 on Sheet 2.
2. For moment connection at bottom beam flange to column flange, the maximum root pass thickness shall not exceed 1/4" per Part V, Item 1. For welded connection at all other locations, see Table 5 on Sheet 2 for maximum root pass thickness.
3. Root Opening, R, and Groove Angle, α, shall be per selected AWS prequalified CJP groove welded joint detail.
4. Welding pass numbers are shown diagrammatically to indicate sequence. Quantity of passes may vary due to depth and/or position of weld. This figure is intended to illustrate recommended welding sequence for FCAW and SMAW welding process only to reduce stresses due to weld skrinkage

Weld Pass Sequence — Detail 13
Scale: Not to Scale

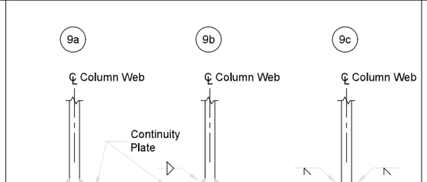

Doubler Plate Welds to Continuity Plate — Detail 9
Scale: Not to Scale

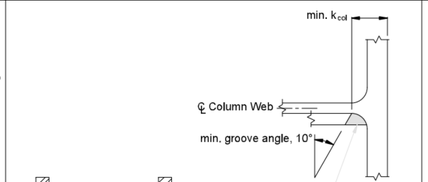

Note:
1. A square-edge plate and square groove weld between doubler plate and column is not permitted.
2. Double plate Fy shall have the same as the column Fy.

(Refer to Figure C-E3.3 from the 2010 AISC Seismic Provisions, "For Structural Steel Buildings")

Groove Welded Doubler Plate — Detail 5
Scale: Not to Scale

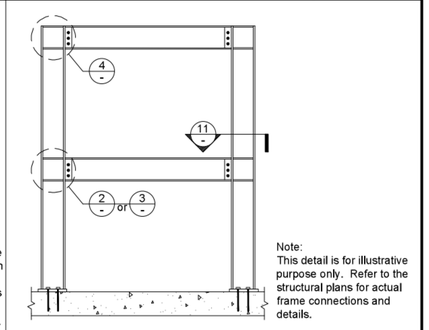

Note:
This detail is for illustrative purpose only. Refer to the structural plans for actual frame connections and details.

Sample Steel Moment Frame — Detail 1
Scale: Not to Scale

TOLERANCES	
As Detailed	As Fit-Up
R = +1/16, -0	+1/4, -1/16
α = +10°, -0°	+10°, -5°

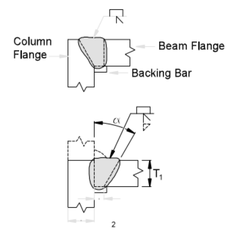

Welding Process	Joint Designation	Base Metal Thickness (U = unlimited) T_1	T_2	Groove Preparation: Root Opening	Groove Angle	Allowed Welding Positions	Gas Shielding for FCAW
SMAW	TC-U4a	U	U	R = 1/4	α = 45°	All	-
				R = 3/8	α = 30°	F, V, OH	-
FCAW	TC-U4a-GF	U	U	R = 3/16	α = 30°	All	Required
				R = 3/8	α = 30°	F	Not required
				R = 1/4	α = 45°	All	Not required

Notes:
1. Groove welds in corner and T-joints of cyclically loaded structures shall be reinforced with fillet welds equal to T_1 /4, but need not exceed 3/8 inch.
2. For corner joints, the outside groove preparation may be in either or both members, provided the basic groove configuration is not changed and adequate edge distance is maintained to support the welding operations without excessive edge melting.
3. Adapted with permission from the AWS D1.1 Committee on Structural Welding, Structural Welding Code - Steel, AWS D1.1/D1.1M: 2010 Miami: American Welding Society, Figure 3.4 pg. 95 (top left).

AWS Prequalified CJP Groove Welded Joint Detail — Detail 14
Scale: Not to Scale

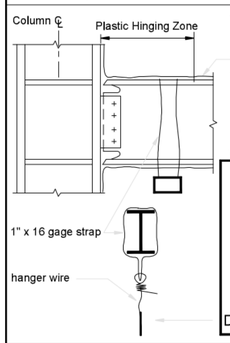

WARNING SIGN

"It is PROHIBITED to attach and to cause penetration or damage to the plastic hinging zones of steel moment-frames. These PROHIBITED conditions include bolts, holes, screws, shot pins, welds and tack welds (permanent or temporary). Failure to comply with these requirements may cause the replacement of steel."

DO NOT MOVE OR REMOVE THIS SIGN

Warning Sign at Plastic Hinging Zone — Detail 15
Scale: Not to Scale

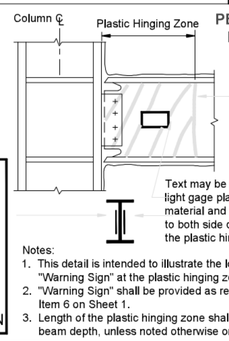

Notes:
1. This detail is intended to illustrate the location of the "Warning Sign" at the plastic hinging zone.
2. "Warning Sign" shall be provided as required by Part IV Item 6 on Sheet 1.
3. Length of the plastic hinging zone shall be a min. of 2 x beam depth, unless noted otherwise on the structural plans.

Doubler Plate Welds to Continuity Plate — Detail 10
Scale: Not to Scale

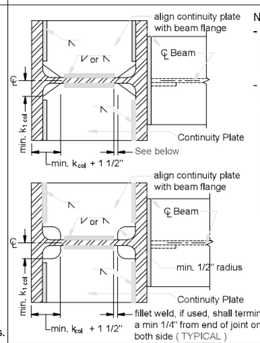

Note:
- Continuity plate shall have a thickness greater than or equal to the beam flange or beam flange connection plate.
- At the end of the weld adjacent to the column web/flange juncture, weld tabs for continuity plates shall not be used, except when permitted by the engineer of record. Unless specified by the engineer of record that they be removed, weld tabs shall not be removed when used in this location (AISC 341-10 sec D2)

Continuity Plate Detail — Detail 11
Scale: Not to Scale

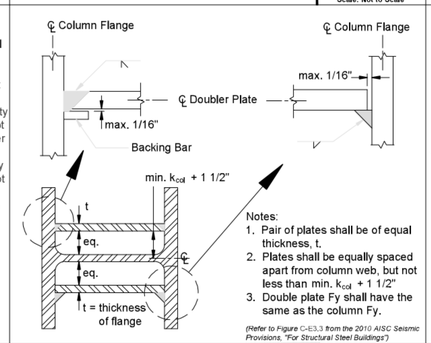

Notes:
1. Pair of plates shall be of equal thickness, t.
2. Plates shall be equally spaced apart from column web, but not less than min. k_{col} + 1 1/2"
3. Double plate Fy shall have the same as the column Fy.

(Refer to Figure C-E3.3 from the 2010 AISC Seismic Provisions, "For Structural Steel Buildings")

Fillet Welded Doubler Plate — Detail 6
Scale: Not to Scale

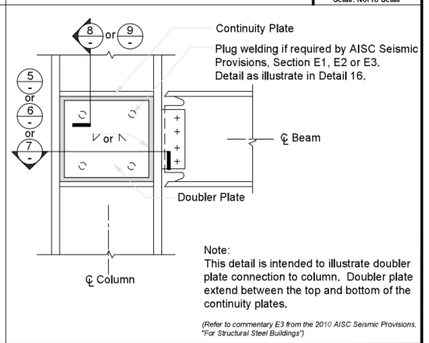

Note:
This detail is intended to illustrate doubler plate connection to column. Doubler plate extend between the top and bottom of the continuity plates.

(Refer to commentary E3 from the 2010 AISC Seismic Provisions, "For Structural Steel Buildings")

Groove or Fillet Welded Doubler Plate — Detail 7
Scale: Not to Scale

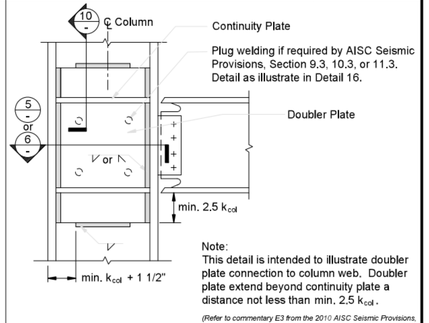

Note:
This detail is intended to illustrate doubler plate connection to column web. Doubler plate extend beyond continuity plate a distance not less than min. 2.5 k_{col} .

(Refer to commentary E3 from the 2010 AISC Seismic Provisions, "For Structural Steel Buildings")

Web Doubler Plate Detail — Detail 3
Scale: Not to Scale

NOT FOR CONSTRUCTION

09.AUG.21

belzberg architects
2321 MAIN STREET
SANTA MONICA, CA 90405
310.453.9611
www.belzbergarchitects.com

ARUP
Arup North America Ltd.
900 Wilshire Boulevard,
19th Floor
Los Angeles CA 90017
Tel: 310 578 4400
www.arup.com

#	DESCRIPTION	DATE

MOMENT FRAME DETAILS - LADBS QUALITY ASSURANCE SHEET 3 OF 3

PROJECT NUMBER:

S007

8/10/2021 5:23:14 PM

GENERAL NOTES FOR STRUCTURAL OBSERVATION

(1) Structural Observation is required for the structural system in accordance with the Information Bulletin No. P/BC 2017-024. Structural Observation is the visual observation at the construction site of the elements and connections of the structural system at significant construction stages, and the complete structure for general conformance to the approved plans and specifications. Structural Observation does not waive the responsibility for the inspections required of the building inspector or the deputy inspector.

(2) The owner shall employ a State of California registered civil or structural engineer or licensed architect to perform the Structural Observation. The Los Angeles Department of Building and Safety (LADBS) requires the use of the engineer or architect, or his/her designee responsible for the structural design who are independent of the contractor.

(3) The Structural Observer shall provide evidence of employment by the owner or the owner's representative. A letter from the owner, the owner's representative, or a copy of the agreement for services shall be sent to the building inspector before the first site visit.

(4) The owner or owner's representative shall coordinate and call for a meeting between the engineer or architect responsible for the structural design, Structural Observer, contractor, affected subcontractors and deputy inspectors. The purpose of the meeting shall be to identify the major structural elements and connections that affect the vertical and lateral load systems of the structure and to review scheduling of the required observations. A record of the meeting shall be included in the first observation report submitted to the building inspector.

(5) The Structural Observer shall perform site visits at those steps in the progress of the work that allow for correction of deficiencies without substantial effort or uncovering of the work involved. At a minimum, the listed significant construction stages on either the "Structural Observation/Significant Construction Stages' form or the "Structural Observation Program and Designation of the Structural Observer" form IN/Form.08 (Part 2) require a site visit and an observation report from the Structural Observer.

(6) The Structural Observer shall prepare a report of the "Structural Observation Report Form" IN/Form.08 (Part 1) for each significant stage of construction observed. The original of the Structural Observation report shall be sent to the building inspector's office and shall be signed and sealed (**wet stamp**) by the responsible Structural Observer. One copy of the observation report shall be attached to the approved plans. The copy attached to the plans shall be signed and sealed **(wet stamp**) by the responsible Structural Observer or their designee. Copies of the report shall also be given to the owner, contractor, and deputy inspector. Any deficiency noted on the observation report will become the responsibility of the structural engineer or architect of record to verify its completion by the Structural Observer.

(7) A final observation report must be submitted which shows that all observed deficiencies were resolved and structural system generally conforms with the approved plans and specifications. The Los Angeles Department of Building and Safety (LADBS) will not accept the structural work without the final observation report and the correction of specific deficiencies noted during normal building inspection.

As a covered entity under Title II of the Americans with Disabilities Act, the City of Los Angeles does not discriminate on the basis of disability and, upon request, will provide reasonable accommodation to ensure equal access to its programs, services and activities.

P/BC 2017-024

(8) The Structural Observer shall provide the original stamped and signed "Structural Observation Report Form" to the City of Los Angeles Department of Building and Safety Building Inspector.

(9) When there is a need to replace the Structural Observer of record, the owner shall:

a) Notify the building inspector in writing before the next inspection by submitting completed "Structural Observation Program and Designation of the Structural Observer" form IN/Form.08 (Part 2).
b) Call an additional preconstruction meeting, and
c) Furnish the replacement Structural Observer with a copy of all previous observation reports.
d) The new Structural Observer must be designated by the engineer or architect of record.

The replacement Structural Observer shall approve the correction of the original observed deficiencies unless otherwise approved by plan check supervision. The policy of the Department shall be to correct any properly noted deficiencies without consideration of their source.

(10) The engineer or architect of record shall develop all changes relating to the structural systems. The building department shall review and approve all changes to the approved plans and specifications.

As a covered entity under Title II of the Americans with Disabilities Act, the City of Los Angeles does not discriminate on the basis of disability and, upon request, will provide reasonable accommodation to ensure equal access to its programs, services and activities.

NOT FOR CONSTRUCTION

09.AUG.21

ba
belzberg architects
2321 MAIN STREET
SANTA MONICA, CA 90405
310.453.9611

www.belzbergarchitects.com

ARUP
Arup North America Ltd.
900 Wilshire Boulevard,
19th Floor
Los Angeles CA 90017
Tel: 310 578 4400
www.arup.com

#	DESCRIPTION	DATE

STRUCTURAL OBSERVATION REQUIREMENTS

PROJECT NUMBER:

S008

8/10/2021 5:29:15 PM

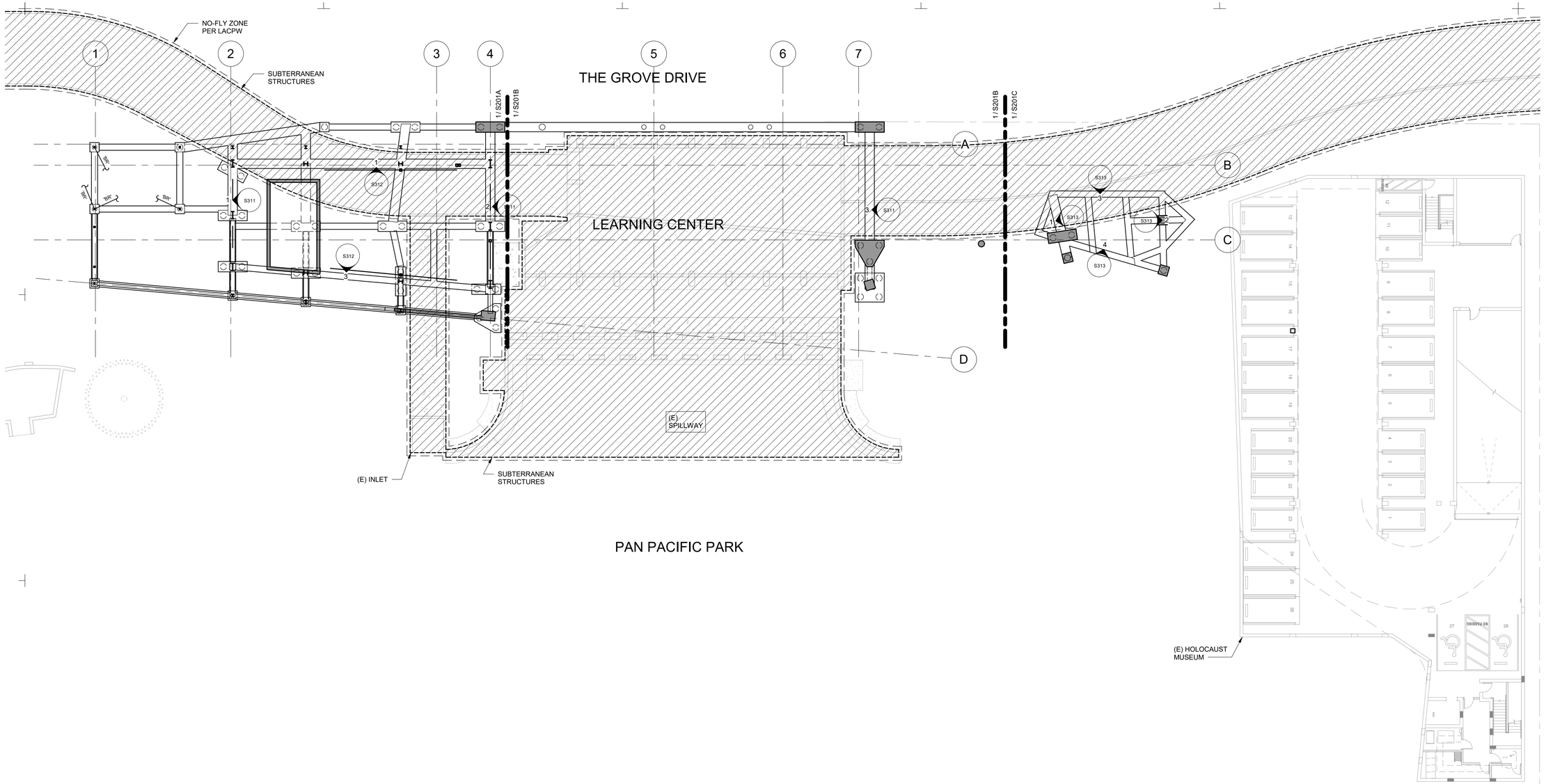

PAN PACIFIC PARK

NOT FOR CONSTRUCTION

09.AUG.21

belzberg architects
2321 MAIN STREET
SANTA MONICA, CA 90405
310.453.9611
www.belzbergarchitects.com

ARUP
Arup North America Ltd.
900 Wilshire Boulevard,
19th Floor
Los Angeles CA 90017
Tel: 310 578 4400
www.arup.com

#	DESCRIPTION	DATE

OVERALL
FOUNDATION PLAN

PROJECT NUMBER:

S201

8/10/2021 5:29:16 PM

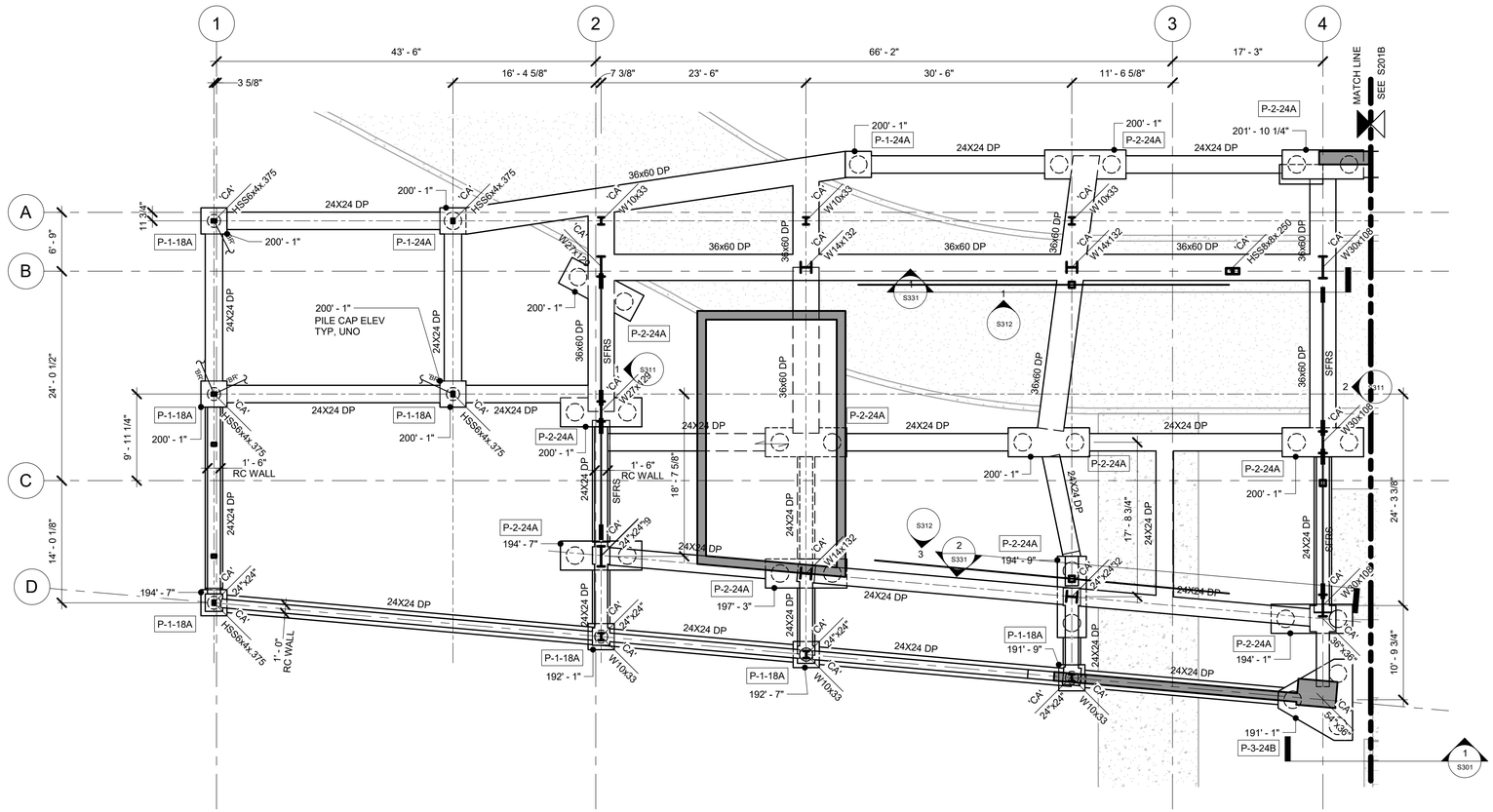

1 FOUNDATION PLAN - SOUTH

1/8" = 1'-0"

NOTES:

1. REFER TO 1/S611 FOR PILE CAP SCHEDULE.

NOT FOR CONSTRUCTION

09.AUG.21

ba
belzberg architects
2321 MAIN STREET
SANTA MONICA, CA 90405
310.453.9611
www.belzbergarchitects.com

ARUP
Arup North America Ltd.
900 Wilshire Boulevard,
19th Floor
Los Angeles CA 90017
Tel: 310 578 4400
www.arup.com

#	DESCRIPTION	DATE

LEARNING CENTER
FOUNDATION PLAN - SOUTH

PROJECT NUMBER:

S201A

8/10/2021 5:29:19 PM

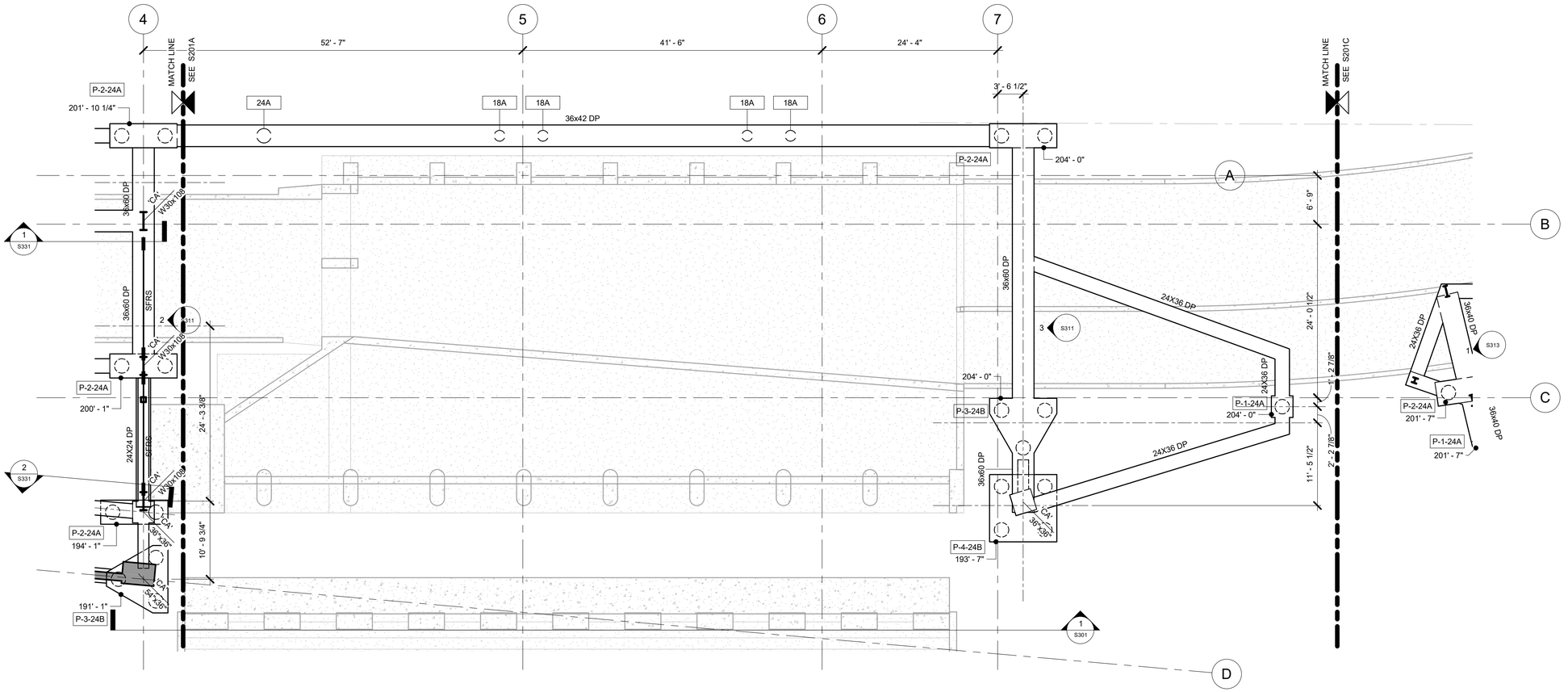

1 FOUNDATION PLAN - NORTH
1/8" = 1'-0"

NOTES:

1. REFER TO 1/S611 FOR PILE CAP SCHEDULE.

NOT FOR CONSTRUCTION

09.AUG.21

ba
belzberg architects
2321 MAIN STREET
SANTA MONICA, CA 90405
310.453.9611
www.belzbergarchitects.com

ARUP
Arup North America Ltd.
900 Wilshire Boulevard,
19th Floor
Los Angeles CA 90017
Tel: 310 578 4400
www.arup.com

#	DESCRIPTION	DATE

LEARNING CENTER
FOUNDATION PLAN - NORTH

PROJECT NUMBER:

S201B

8/10/2021 5:29:21 PM

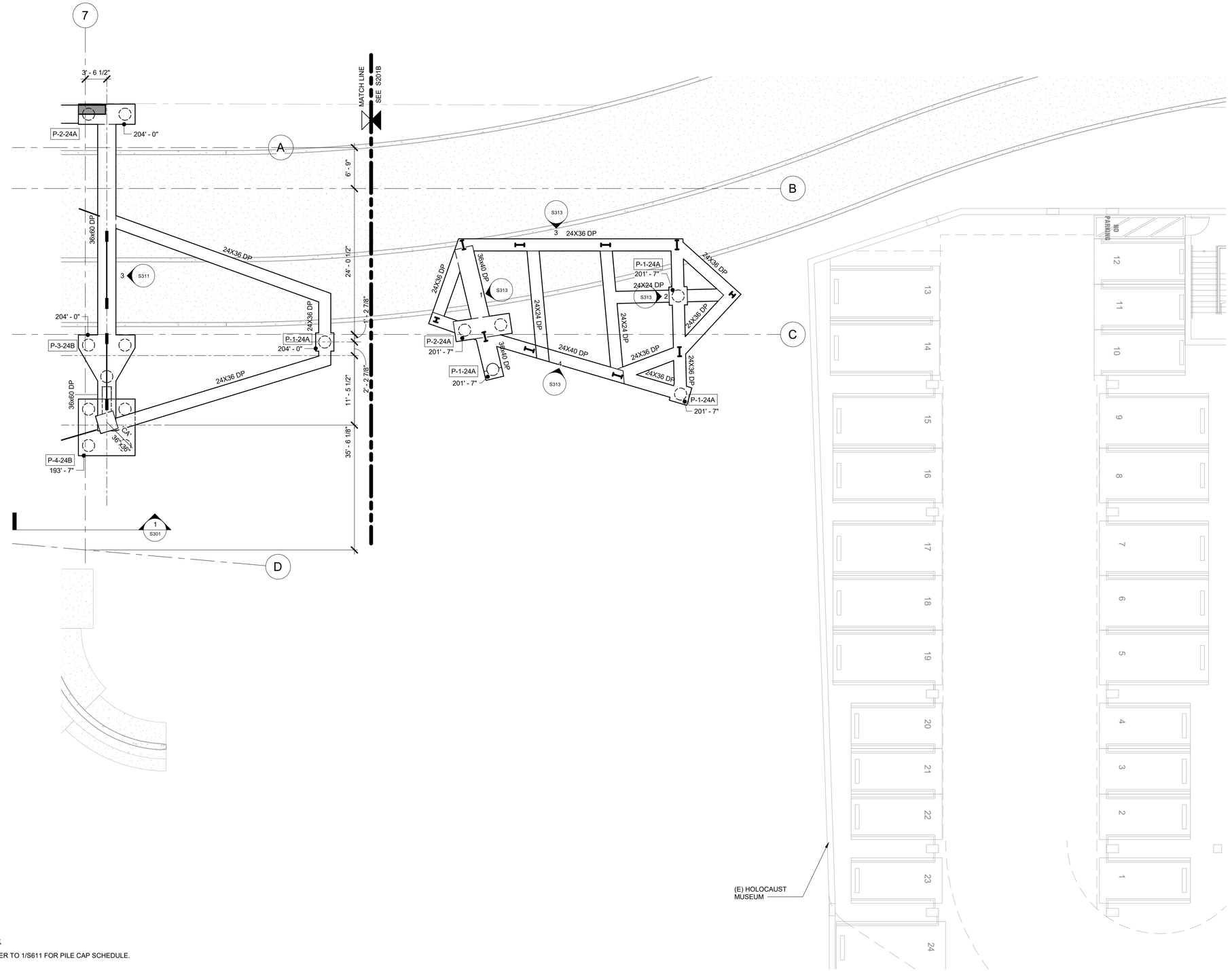

NOTES:

1. REFER TO 1/S611 FOR PILE CAP SCHEDULE.

1 FOUNDATION PLAN - ENTRY PAVILION AND CANOPY
1/8" = 1'-0"

NOT FOR CONSTRUCTION

09.AUG.21

ba
belzberg architects
2321 MAIN STREET
SANTA MONICA, CA 90405
310.453.9611
www.belzbergarchitects.com

ARUP
Arup North America Ltd.
900 Wilshire Boulevard,
19th Floor
Los Angeles CA 90017
Tel: 310 578 4400
www.arup.com

#	DESCRIPTION	DATE

ENTRY PAVILION/BOXCAR PAVILION FOUNDATION PLAN

PROJECT NUMBER:

S201C

8/10/2021 5:29:22 PM

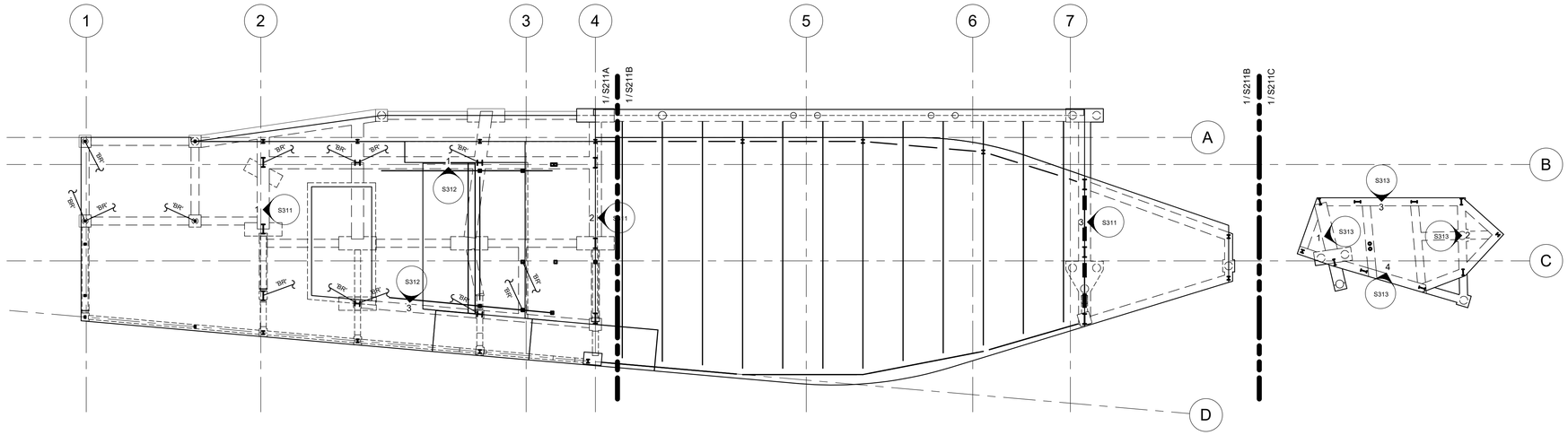

NOT FOR CONSTRUCTION

09.AUG.21

belzberg architects
2321 MAIN STREET
SANTA MONICA, CA 90405
310.453.9611

www.belzbergarchitects.com

ARUP

Arup North America Ltd.
900 Wilshire Boulevard,
19th Floor
Los Angeles CA 90017
Tel: 310 578 4400
www.arup.com

#	DESCRIPTION	DATE

OVERALL GROUND FLOOR PLAN

PROJECT NUMBER:

S211

8/10/2021 5:29:23 PM

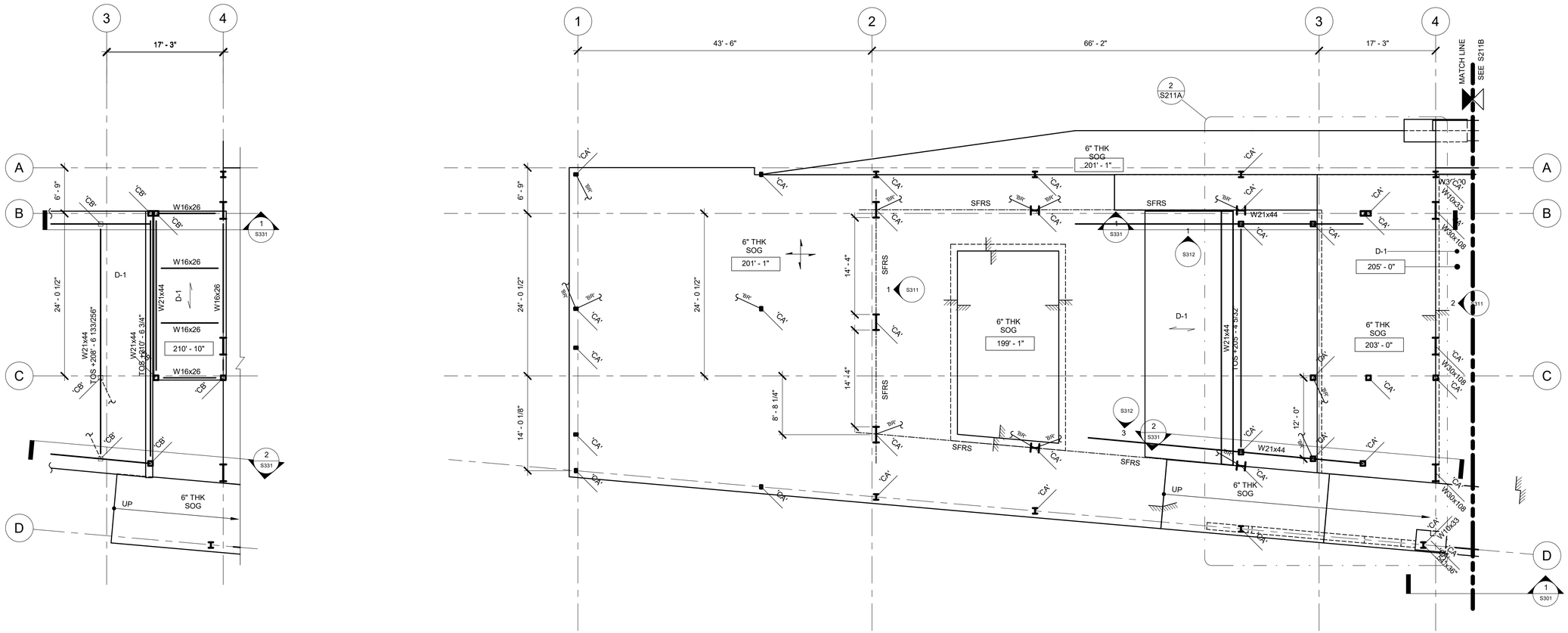

2 02 MEZZANINE - SOUTH
1/8" = 1'-0"

1 01 GALLERY - SOUTH
1/8" = 1'-0"

NOT FOR CONSTRUCTION

09.AUG.21

ba
belzberg architects
2321 MAIN STREET
SANTA MONICA, CA 90405
310.453.9611
www.belzbergarchitects.com

ARUP
Arup North America Ltd.
900 Wilshire Boulevard,
19th Floor
Los Angeles CA 90017
Tel: 310 578 4400
www.arup.com

#	DESCRIPTION	DATE

LEARNING CENTER
GROUND FLOOR
PLAN - SOUTH

PROJECT NUMBER:

S211A

8/10/2021 5:29:25 PM

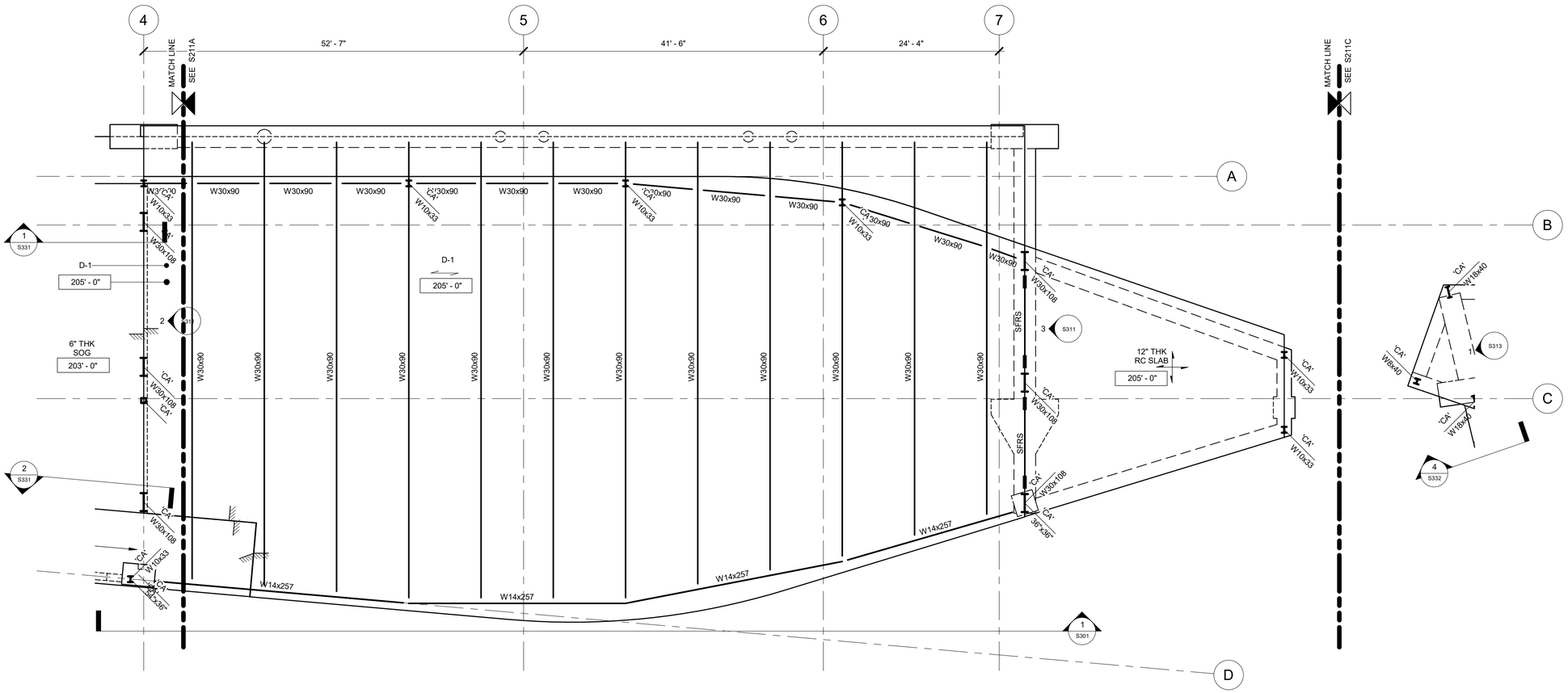
4
5
6
7
52' - 7"
41' - 6"
24' - 4"
MATCH LINE
SEE S211A
MATCH LINE
SEE S211C
A
B
C
D
W30x90
'CA'
W10x33
'CA'
W30x108
'CA'

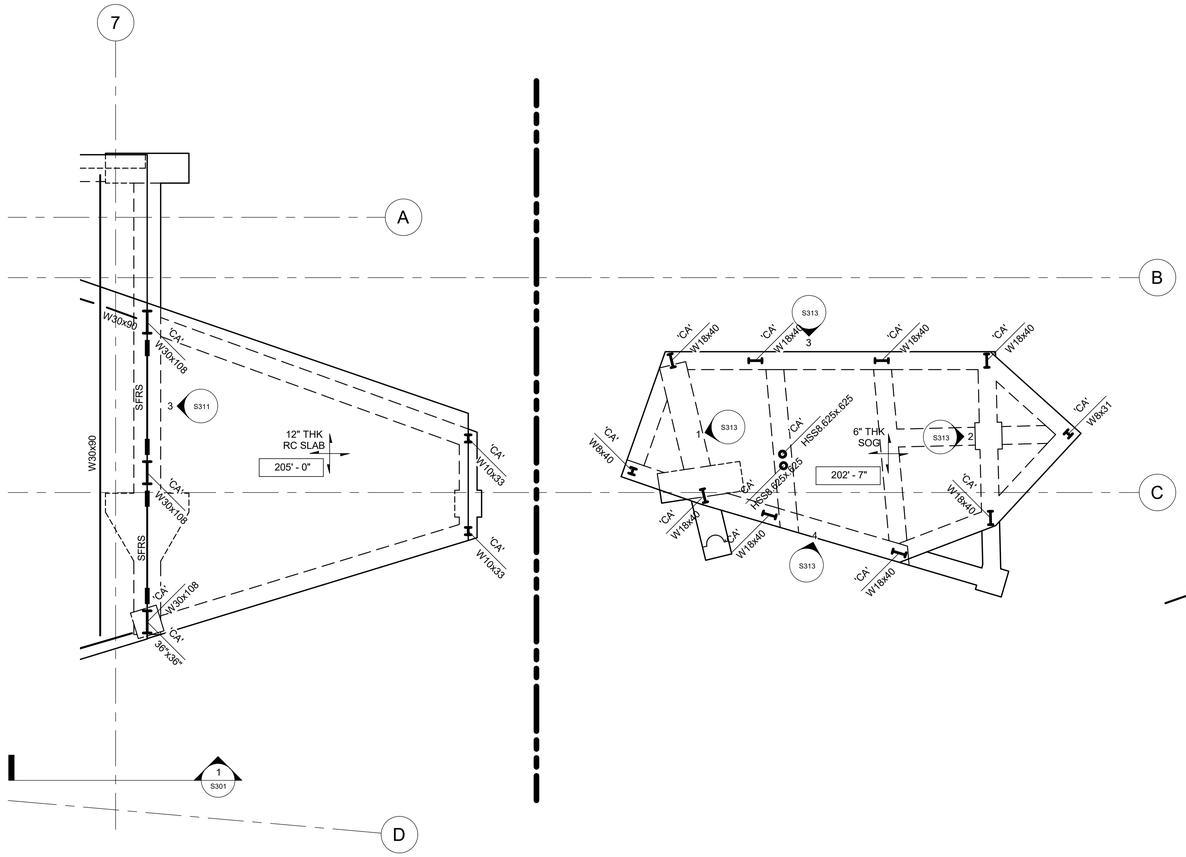

NOT FOR CONSTRUCTION

09.AUG.21

ba
belzberg architects
2321 MAIN STREET
SANTA MONICA, CA 90405
310.453.9611
www.belzbergarchitects.com

ARUP
Arup North America Ltd.
900 Wilshire Boulevard,
19th Floor
Los Angeles CA 90017
Tel: 310 578 4400
www.arup.com

#	DESCRIPTION	DATE

ENTRY
PAVILION/BOXCAR
PAVILION GROUND
FLOOR PLAN

PROJECT NUMBER:

S211C

8/10/2021 5:29:28 PM

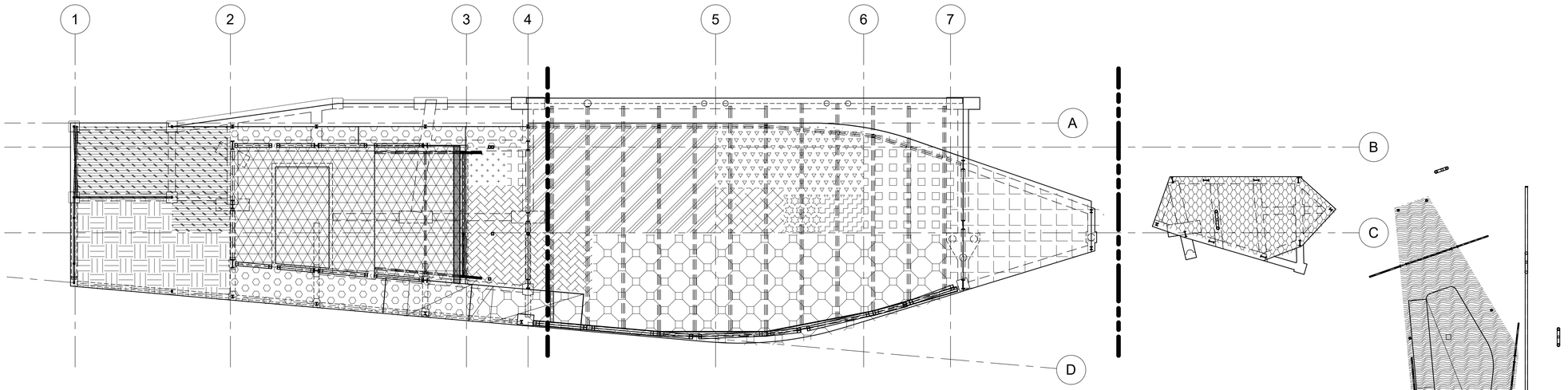

DESIGN FLOOR LOADS

GIFT SHOP:
LL = 100 PSF
SDL TOTAL = 40 PSF
MEP = 3 PSF
FLOOR = 5 PSF
PARTITIONS = 10 PSF
EQUIP/FURNISHINGS= 15 PSF
SOMD OVERPOUR = 5 PSF
MISC = 2 PSF

STORAGE:
LL = 125 PSF
SDL TOTAL = 40 PSF
MEP = 3 PSF
FLOOR = 5 PSF
PARTITIONS = 10 PSF
EQUIP/FURNISHINGS= 15 PSF
SOMD OVERPOUR = 5 PSF
MISC = 2 PSF

BOX CAR EXHIBIT/PAVILION:
LL = 100 PSF
SDL = 25 PSF

GALLERY:
LL = 100 PSF
SDL TOTAL = 40 PSF
MEP = 3 PSF
FLOOR = 5 PSF
PARTITIONS = 10 PSF
EQUIP/FURNISHINGS= 15 PSF
SOMD OVERPOUR = 5 PSF
MISC = 2 PSF

GRN ROOM:
LL = 100 PSF
SDL TOTAL = 40 PSF
MEP = 3 PSF
FLOOR = 5 PSF
PARTITIONS = 10 PSF
EQUIP/FURNISHINGS= 15 PSF
SOMD OVERPOUR = 5 PSF
MISC = 2 PSF

CLASSROOM:
LL = 100 PSF
SDL TOTAL = 40 PSF
MEP = 3 PSF
FLOOR = 5 PSF
PARTITIONS = 10 PSF
EQUIP/FURNISHINGS= 15 PSF
SOMD OVERPOUR = 5 PSF
MISC = 2 PSF

RESTROOMS:
LL = 60 PSF
SDL TOTAL = 40 PSF
MEP = 3 PSF
FLOOR = 5 PSF
PARTITIONS = 10 PSF
EQUIP/FURNISHINGS= 15 PSF
SOMD OVERPOUR = 5 PSF
MISC = 2 PSF

AUDITORIUM:
LL = 100 PSF
SDL TOTAL = 40 PSF
MEP = 3 PSF
FLOOR = 5 PSF
PARTITIONS = 10 PSF
EQUIP/FURNISHINGS= 15 PSF
SOMD OVERPOUR = 5 PSF
MISC = 2 PSF

DiT THEATER:
LL = 100 PSF
SDL TOTAL = 40 PSF
MEP = 3 PSF
FLOOR = 5 PSF
PARTITIONS = 10 PSF
EQUIP/FURNISHINGS= 15 PSF
SOMD OVERPOUR = 5 PSF
MISC = 2 PSF

CORRIDORS:
LL = 100 PSF
SDL TOTAL = 40 PSF
MEP = 3 PSF
FLOOR = 5 PSF
PARTITIONS = 10 PSF
EQUIP/FURNISHINGS= 15 PSF
SOMD OVERPOUR = 5 PSF
MISC = 2 PSF

OFFICE:
LL = 50 PSF
SDL TOTAL = 40 PSF
MEP = 3 PSF
FLOOR = 5 PSF
PARTITIONS = 10 PSF
EQUIP/FURNISHINGS= 15 PSF
SOMD OVERPOUR = 5 PSF
MISC = 2 PSF

MECHANICAL YARD:
LL = 100 PSF
SDL TOTAL = 40 PSF
MEP = 3 PSF
FLOOR = 5 PSF
PARTITIONS = 10 PSF
EQUIP/FURNISHINGS= 15 PSF
SOMD OVERPOUR = 5 PSF
MISC = 2 PSF

IT EQUIPMENT ROOM:
LL = 100 PSF
SDL TOTAL = 40 PSF
MEP = 3 PSF
FLOOR = 5 PSF
PARTITIONS = 10 PSF
EQUIP/FURNISHINGS= 15 PSF
SOMD OVERPOUR = 5 PSF
MISC = 2 PSF

COURTYARD:
LL = 100 PSF
SDL TOTAL = 35 PSF
MEP = 3 PSF
FLOOR = 5 PSF
PARTITIONS = 10 PSF
EQUIP/FURNISHINGS= 15 PSF
MISC = 2 PSF

VESTIBULE:
LL = 100 PSF (TBC)
SDL TOTAL = 40 PSF
MEP = 3 PSF
FLOOR = 5 PSF
PARTITIONS = 10 PSF
EQUIP/FURNISHINGS= 15 PSF
SOMD OVERPOUR = 5 PSF
MISC = 2 PSF

ENTRY PAVILION:
LL = 100 PSF
SDL TOTAL = 40 PSF
MEP = 3 PSF
FLOOR = 5 PSF
PARTITIONS = 10 PSF
EQUIP/FURNISHINGS= 15 PSF
SOMD OVERPOUR = 5 PSF
MISC = 2 PSF

CONCENTRATED LOADS

CLASSROOMS:
LL = 1,000 LBS (TBC)

GIFT SHOP::
LL = 1,000 LBS (TBC)

BOX CAR EXHIBIT/PAVILION:
LL = 1,000 LBS (TBC)
BOX CAR SELF WT: 18,000 LBS (TBC)

1 OVERALL GROUND FLOOR PLAN - LOADING
1/16" = 1'-0"

NOT FOR CONSTRUCTION

09.AUG.21

ba
belzberg architects
2321 MAIN STREET
SANTA MONICA, CA 90405
310.453.9611
www.belzbergarchitects.com

ARUP
Arup North America Ltd.
900 Wilshire Boulevard,
19th Floor
Los Angeles CA 90017
Tel: 310 578 4400
www.arup.com

#	DESCRIPTION	DATE

OVERALL GROUND FLOOR PLAN - LOADING

PROJECT NUMBER:

S211L

8/10/2021 5:29:31 PM

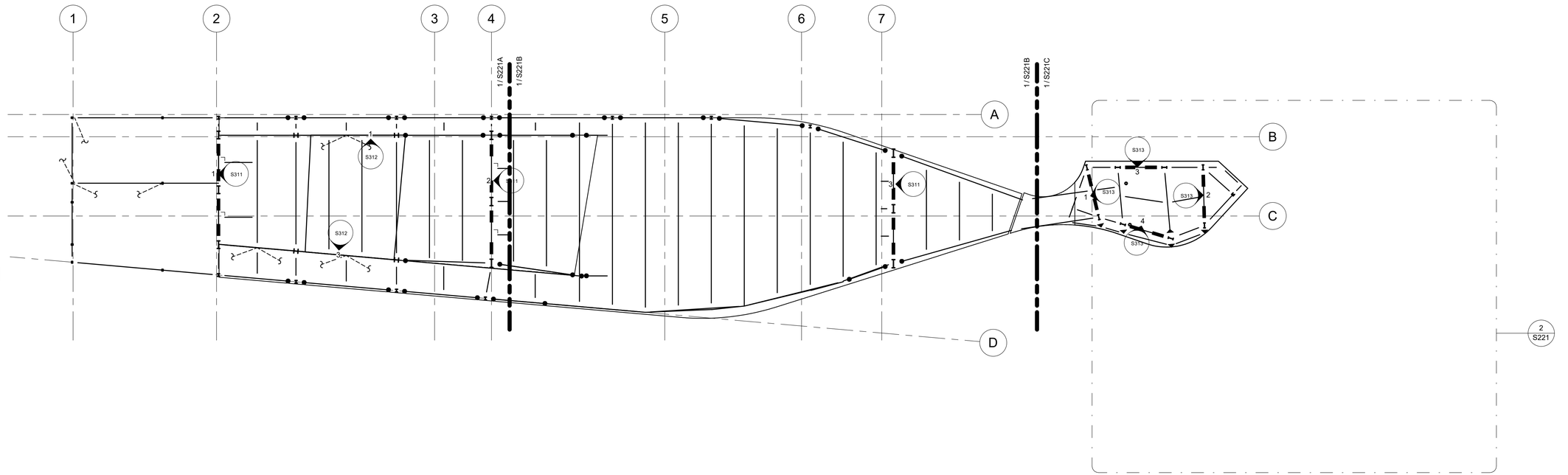

1 OVERALL ROOF PLAN
1/16" = 1'-0"

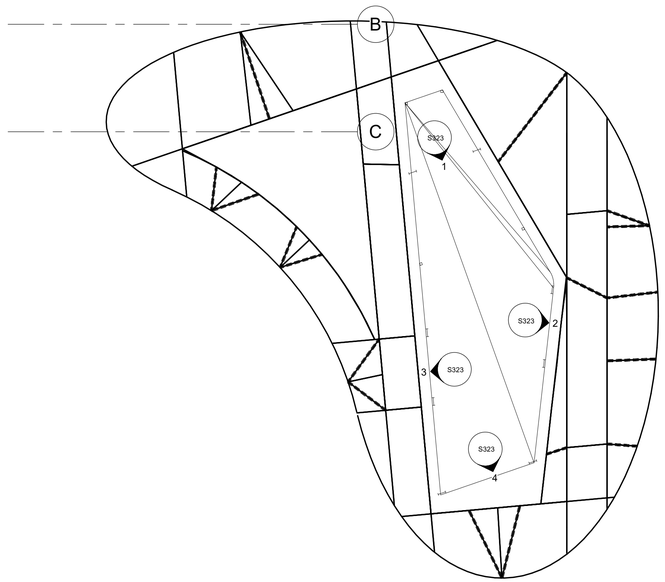

2 03.5 HIGH ROOF OVERALL PLAN
1/16" = 1'-0"

NOT FOR CONSTRUCTION

09.AUG.21

ba
belzberg architects
2321 MAIN STREET
SANTA MONICA, CA 90405
310.453.9611
www.belzbergarchitects.com

ARUP
Arup North America Ltd.
900 Wilshire Boulevard,
19th Floor
Los Angeles CA 90017
Tel: 310 578 4400
www.arup.com

#	DESCRIPTION	DATE

OVERALL ROOF PLAN

PROJECT NUMBER:

S221

8/10/2021 5:23:32 PM

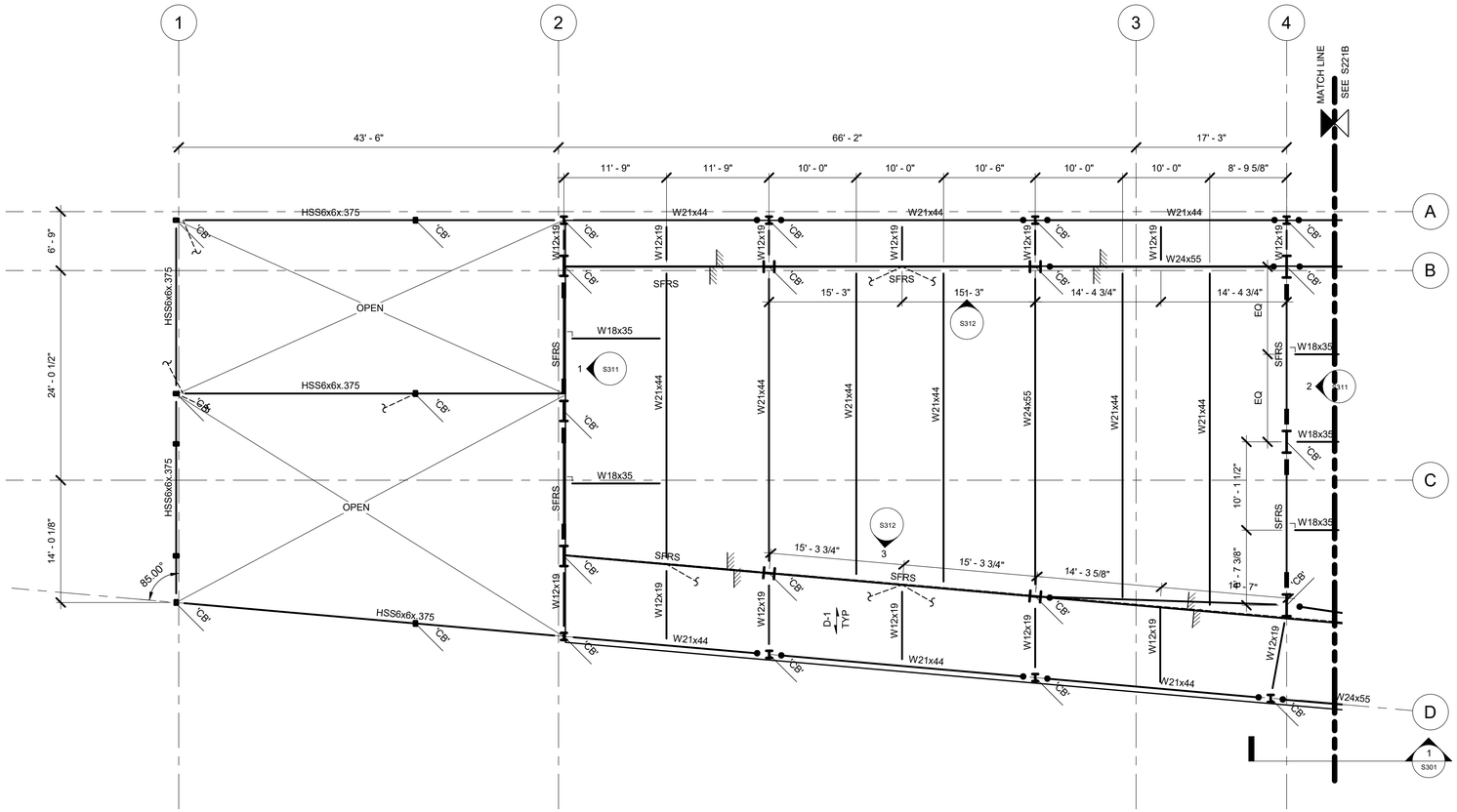

NOT FOR CONSTRUCTION

09.AUG.21

belzberg architects

2321 MAIN STREET
SANTA MONICA, CA 90405
310.453.9611

www.belzbergarchitects.com

ARUP

Arup North America Ltd.
900 Wilshire Boulevard,
19th Floor
Los Angeles CA 90017
Tel: 310 578 4400
www.arup.com

#	DESCRIPTION	DATE

LEARNING CENTER
ROOF PLAN - SOUTH

PROJECT NUMBER:

S221A

8/10/2021 5:29:34 PM

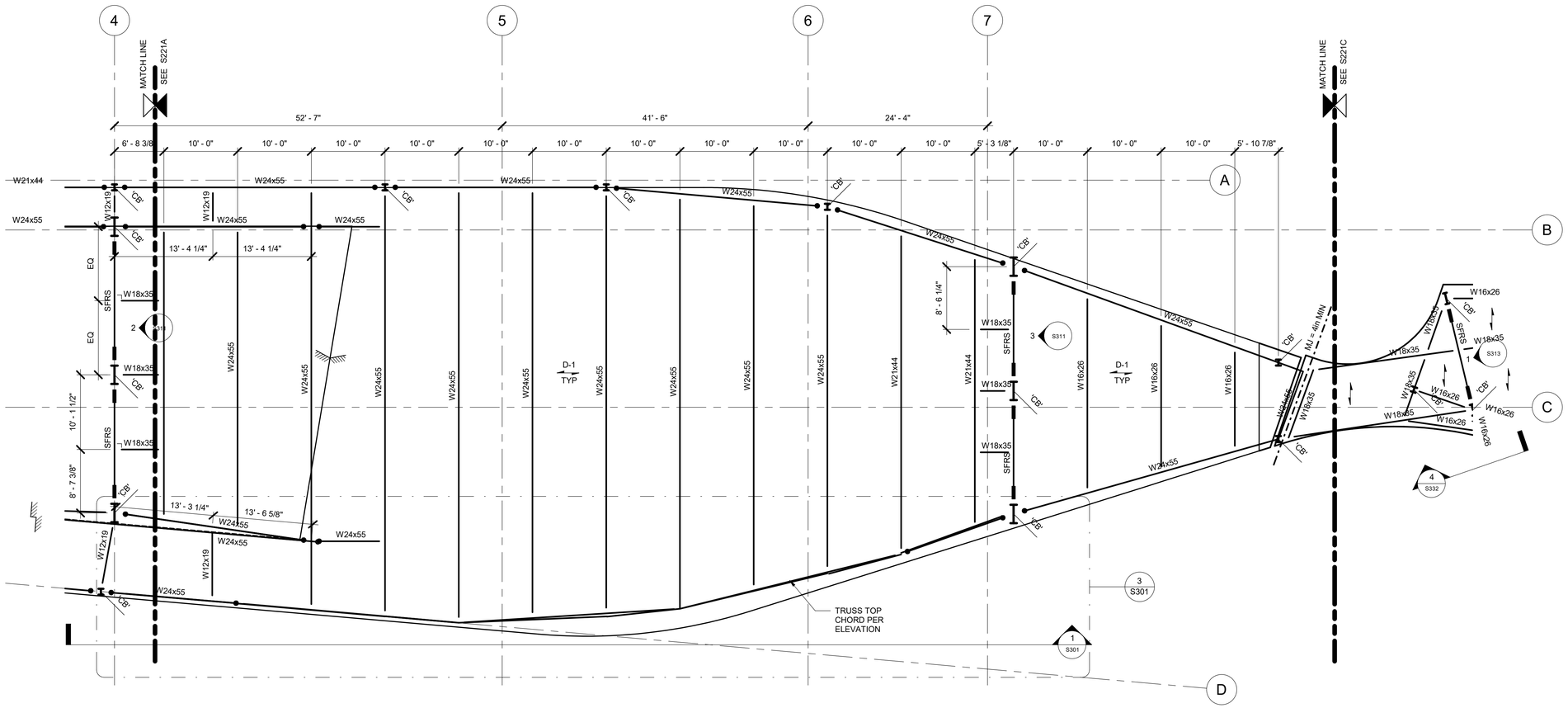

NOT FOR CONSTRUCTION

09.AUG.21

belzberg architects

2321 MAIN STREET
SANTA MONICA, CA 90405
310.453.9611

www.belzbergarchitects.com

ARUP

Arup North America Ltd.
900 Wilshire Boulevard,
19th Floor
Los Angeles CA 90017
Tel: 310 578 4400
www.arup.com

#	DESCRIPTION	DATE

LEARNING CENTER
ROOF PLAN - NORTH

PROJECT NUMBER:

S221B

8/10/2021 5:29:37 PM

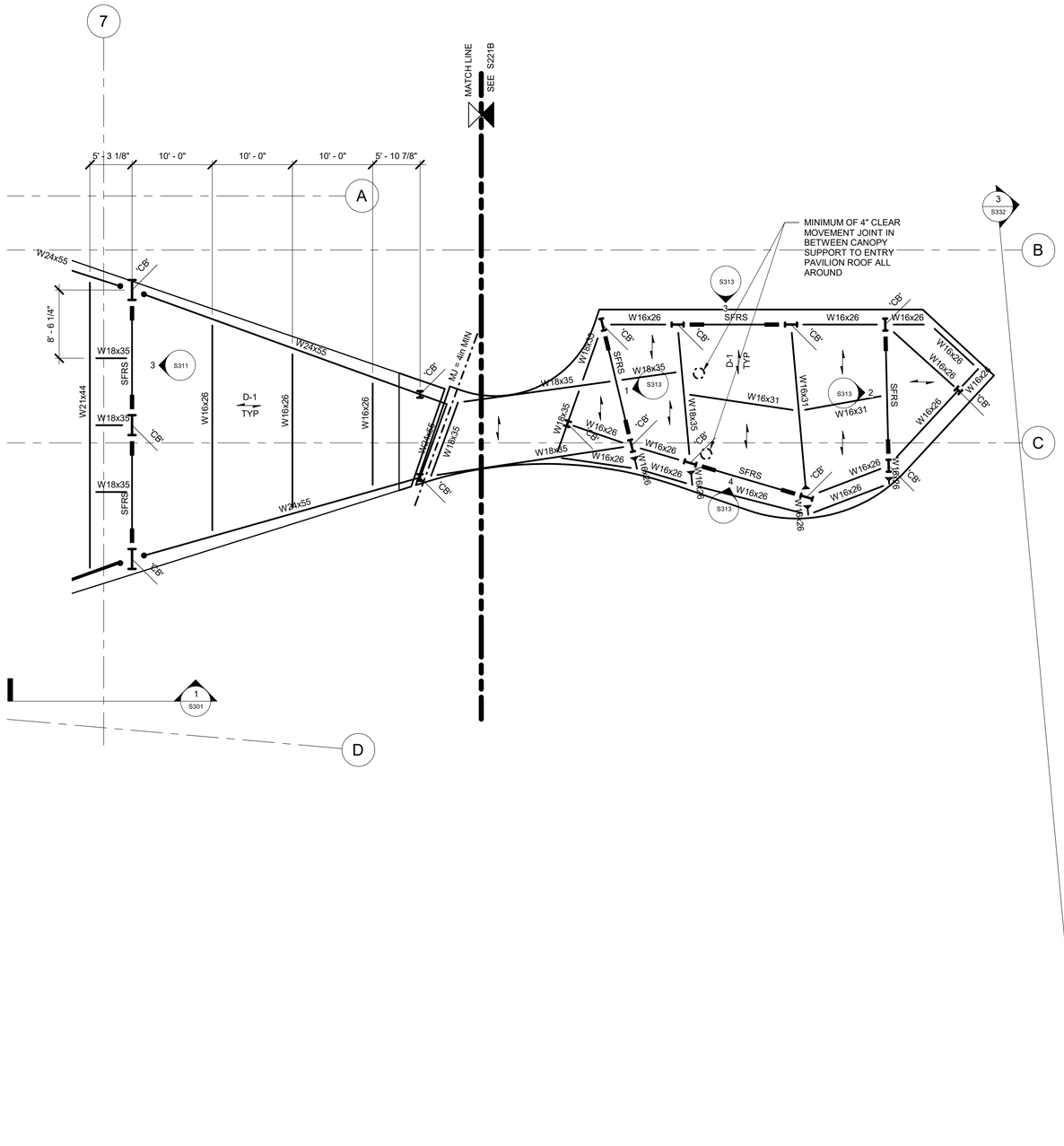

NOT FOR CONSTRUCTION

09.AUG.21

belzberg architects
2321 MAIN STREET
SANTA MONICA, CA 90405
310.453.9611
www.belzbergarchitects.com

ARUP
Arup North America Ltd.
900 Wilshire Boulevard,
19th Floor
Los Angeles CA 90017
Tel: 310 578 4400
www.arup.com

#	DESCRIPTION	DATE

ENTRY
PAVILION/BOXCAR
PAVILION ROOF
PLAN

PROJECT NUMBER:

S221C

8/10/2021 5:29:37 PM

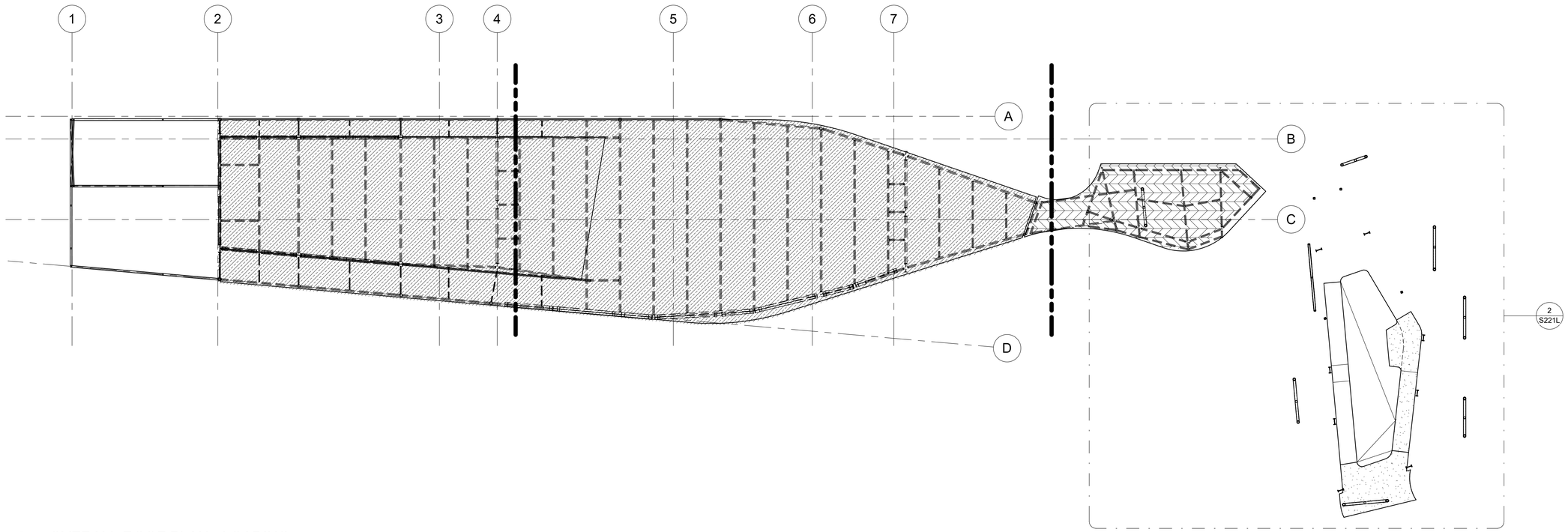

1 OVERALL ROOF PLAN - LOADING
1/16" = 1'-0"

DESIGN ROOF LOADS

LEARNING CENTER:
LL = 20 PSF
SDL TOTAL = 35 PSF
MEP = 3 PSF
PV PANELS = 9 PSF
ROOFING = 10 PSF
CEILING = 5 PSF
SOMD OVERPOUR = 5 PSF
MISC = 3 PSF

SDL (GLASS WALLS) = 15 PSF
PARTITIONS = 10 PSF

ENTRY PAVILION:
LL = 20 PSF
SDL TOTAL = 35 PSF
MEP = 3 PSF
PV PANELS = 9 PSF
ROOFING = 10 PSF
CEILING = 5 PSF
SOMD OVERPOUR = 5 PSF
MISC = 3 PSF

SDL (GLASS WALLS) = 15 PSF

CANOPY:
LL = 5 PSF
SDL TOTAL = 5 PSF
PTFE FABRIC = 1 PSF
CONN/SEC ELEMENTS = 3 PSF
MISC = 1 PSF

BOX CAR EXHIBIT/PAVILION:
LL = 20 PSF
SDL = 25 PSF
SDL (GLASS WALLS) = 15 PSF

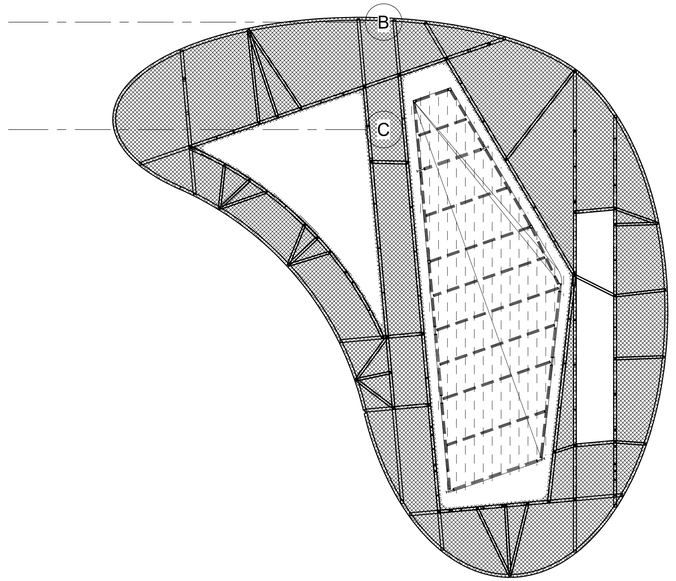

2 CANOPY ROOF PLAN
1/16" = 1'-0"

NOT FOR CONSTRUCTION

09.AUG.21

ba
belzberg architects
2321 MAIN STREET
SANTA MONICA, CA 90405
310.453.9611
www.belzbergarchitects.com

ARUP
Arup North America Ltd.
900 Wilshire Boulevard,
19th Floor
Los Angeles CA 90017
Tel: 310 578 4400
www.arup.com

#	DESCRIPTION	DATE

OVERALL ROOF PLAN - LOADING

PROJECT NUMBER:

S221L

8/10/2021 5:29:43 PM

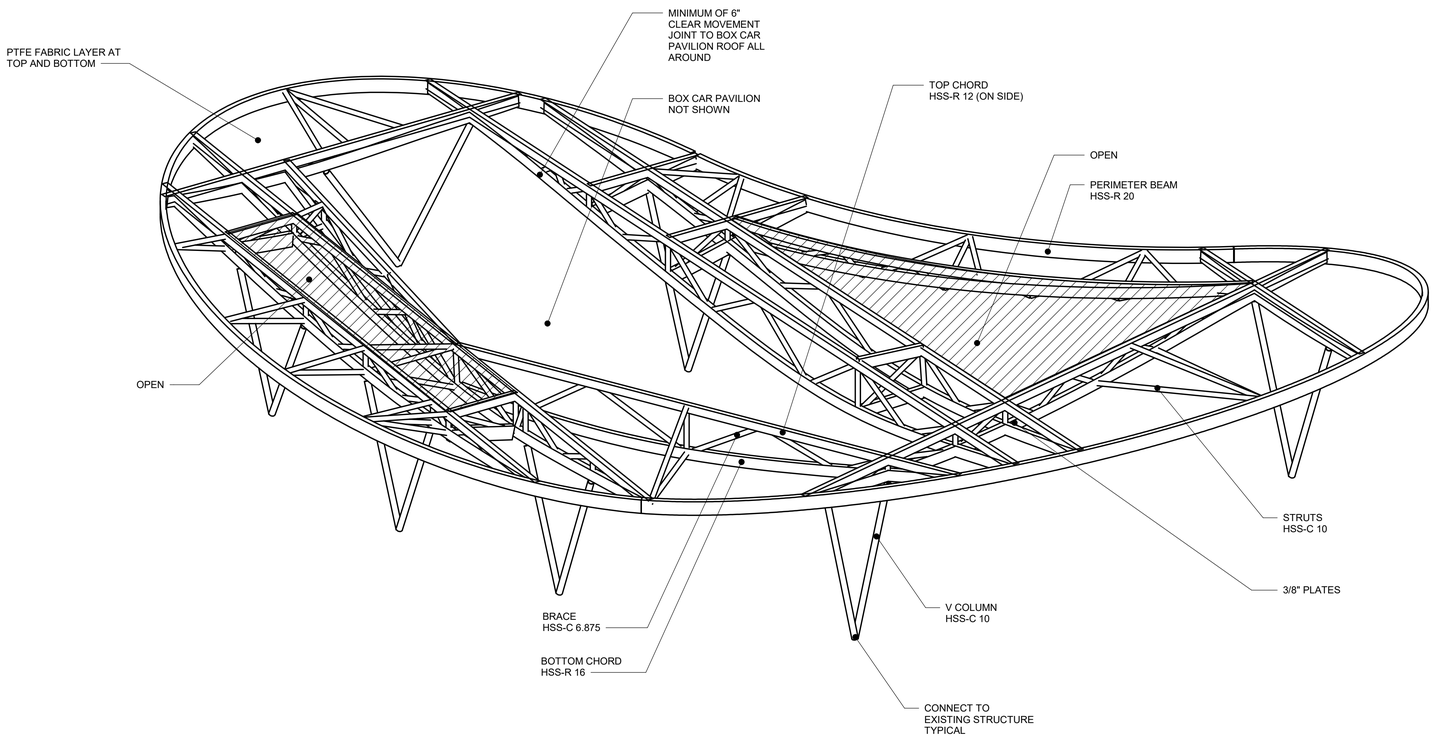

1 CANOPY STRUCTURE

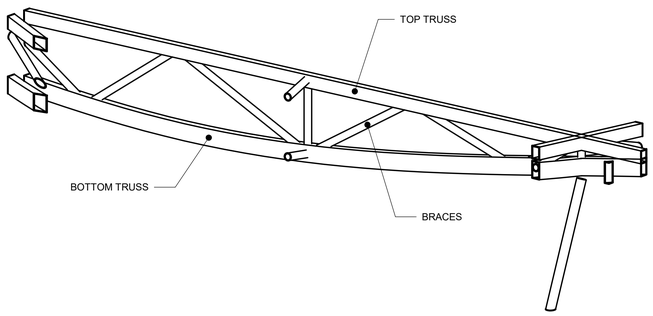

2 TYPICAL CANOPY STRUCTURE TRUSS ELEVATION

NOTES:

1. FOR COST ESTIMATING PURPOSES ASSUME 14PSF OVER GROSS CANOPY AREA INCLUDING CONNECTIONS BUT EXCLUDING WASTAGE FOR STEEL.
2. THE CONTRACTOR SHALL PROCURE THE DESIGN, FABRICATION AND INSTALLATION OF THE FABRIC INCLUDING ALL HARDWARE FOR INSTALLATION.
3. THE STRUCTURAL ENGINEERING SHALL BE PREPARED AND STAMPED/SIGNED BY A CIVIL OR STRUCTURAL ENGINEER LICENSED IN CALIFORNIA.
4. THE STRUCTURAL ENGINEER OF THE FABRIC SHALL SUBMIT DESIGN CALCULATIONS FOR LOADS ON STRUCTURE TO THE SEOR PRIOR TO SUBMITTING TO THE AHJ.
5. IN THE DESIGN THE STRUCTURAL ENGINEER SHALL ADJUST THE PRETENSION AND THE SURFACE GRADIENT SO PONDING CAN BE EFFECTIVELY AVOIDED.
6. THE STRUCTURAL ENGINEER OF THE FABRIC IS RESPONSIBLE TO INCLUDE THE APPROPRIATE TEMPERATURE LOAD CASES AND TO CONSIDER ALL TEMPORARY LOADING CONDITIONS.
7. THE PRETENSION ON THE MAIN STEEL STRUCTURE SHALL NOT EXCEED 0.3KIPS/FT.
8. DEFINITIONS:
   RECTANGULAR HSS = HSS-R NOMINAL DEPTH IN INCHES
   CIRCULAR HSS = HSS-C NOMINAL DIAMETER IN INCHES

NOT FOR CONSTRUCTION

09.AUG.21

ba
belzberg architects
2321 MAIN STREET
SANTA MONICA, CA 90405
310.453.9611
www.belzbergarchitects.com

ARUP
Arup North America Ltd.
900 Wilshire Boulevard,
19th Floor
Los Angeles CA 90017
Tel: 310 578 4400
www.arup.com

#	DESCRIPTION	DATE

CANOPY ROOF FRAMING PLAN

PROJECT NUMBER:

S227

8/10/2021 5:29:45 PM

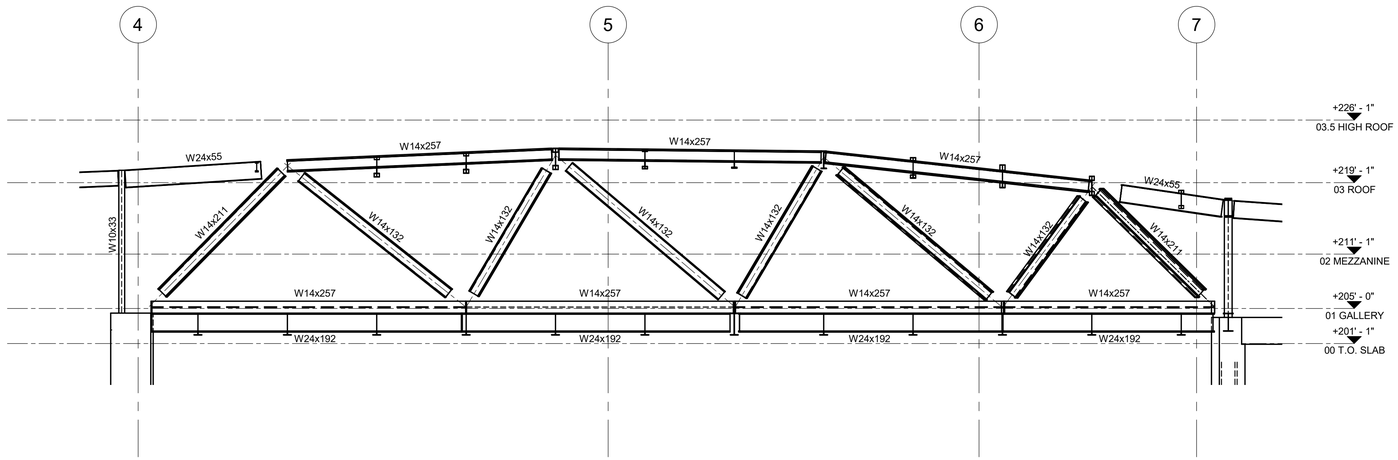

1 STRUCTURAL TRUSS ELEVATION

1/8" = 1'-0"

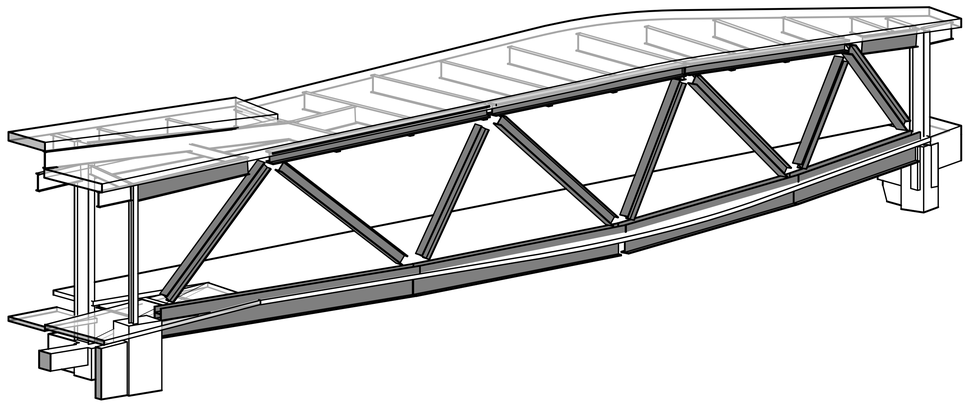

2 ISOMETRIC VIEW

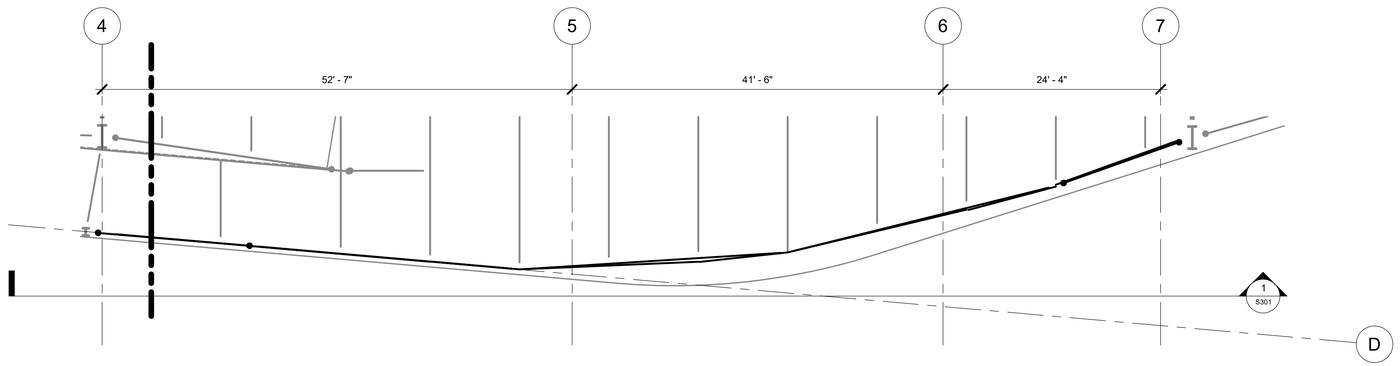

3 PLAN VIEW

1/8" = 1'-0"

TRUSS NOTES:

1. CONTRACTOR IS RESPONSIBLE FOR ALL TEMPORARY CONDITIONS.
2. PROVIDE A CAMBER OF Xin AT MIDSPAN.
3. STRUCTURAL DESIGN FOR THE FINAL CONDITION ASSUMES SHORED CONSTRUCTION WITH DELAYED POUR JOINTS IN EAST-WEST DIRECTION AT BOTH ENDS OF THE TRUSS.
4. SPLICE ONLY AT THE LOCATIONS INDICATED.
5. PROVIDE SURVEY OF THE SHORED AND FULLY DETAILED CONDITION BEFORE DE-SHORING TO SEOR.
6. CONCRETE ON METAL DECK ON ROOF AND GROUND FLOOR NEEDS TO HAVE REACHED FULL DESIGN STRENGTH BEFORE DE-SHORING TRUSS.
7. PROVIDE SURVEY OF THE DE-SHORED CONDITION TO THE SEOR FOR RECORD.
8. TIGHTEN BOLTS IN CONNECTION 9/S637 AFTER DE-SHORING.
9. CAST DELAYED POUR JOINT AFTER DE-SHORING.
10. ALL BOLTED TRUSS CONNECTIONS SHALL BE SLIP-CRITICAL.

NOT FOR CONSTRUCTION

09.AUG.21

ba
belzberg architects
2321 MAIN STREET
SANTA MONICA, CA 90405
310.453.9611
www.belzbergarchitects.com

ARUP
Arup North America Ltd.
900 Wilshire Boulevard,
19th Floor
Los Angeles CA 90017
Tel: 310 578 4400
www.arup.com

#	DESCRIPTION	DATE

LEARNING CENTER
TRUSS ELEVATION

PROJECT NUMBER:

S301

8/10/2021 5:29:47 PM

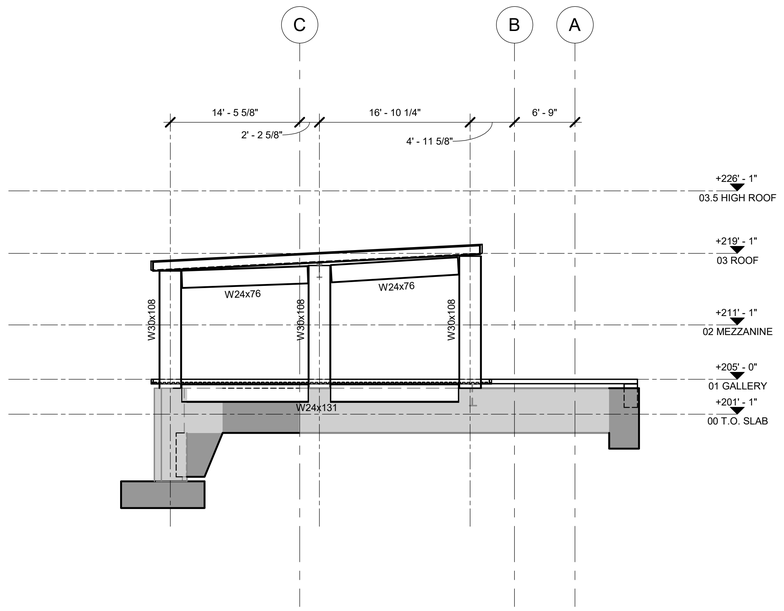

3 SPECIAL MOMENT FRAME NEAR GL7 (SFRS)
1/8" = 1'-0"

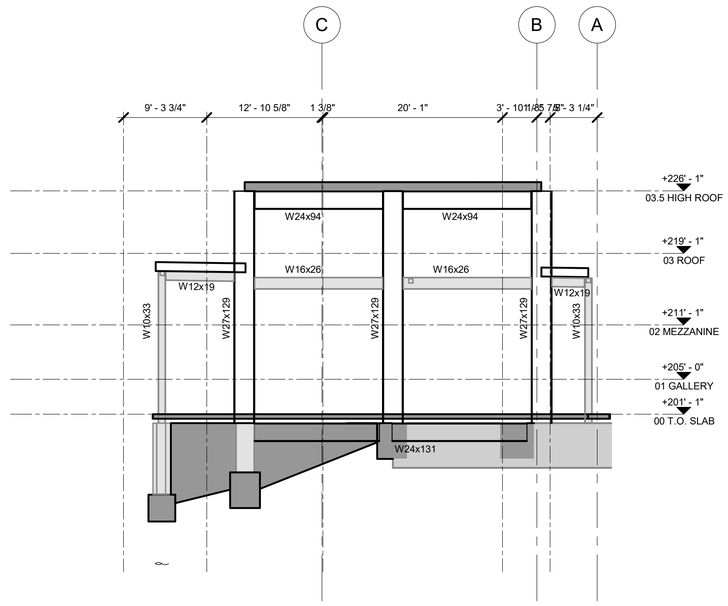

1 SPECIAL MOMENT FRAME NEAR GL2 (SFRS)
1/8" = 1'-0"

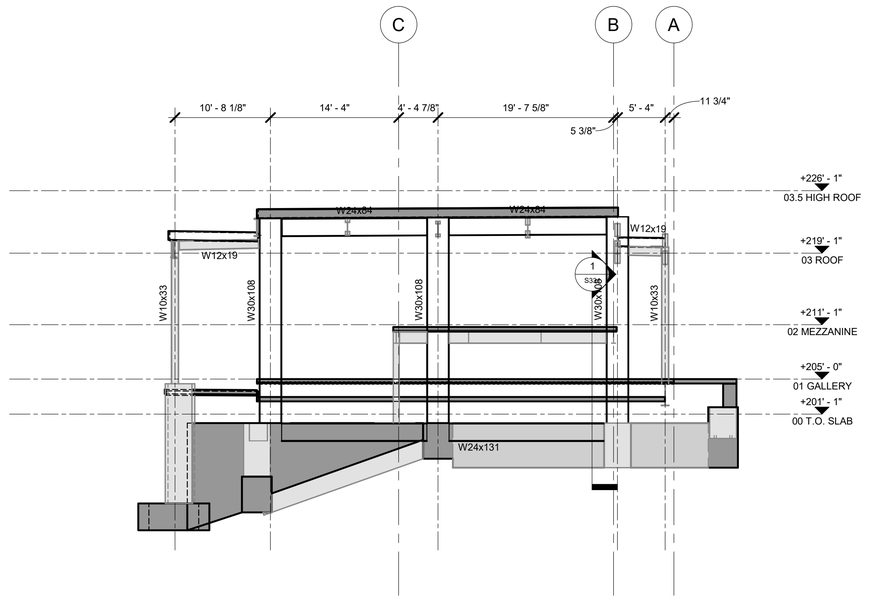

2 SPECIAL MOMENT FRAME AT GL 4 (SFRS)
1/8" = 1'-0"

NOT FOR CONSTRUCTION

09.AUG.21

belzberg architects
2321 MAIN STREET
SANTA MONICA, CA 90405
310.453.9611

www.belzbergarchitects.com

ARUP

Arup North America Ltd.
900 Wilshire Boulevard,
19th Floor
Los Angeles CA 90017
Tel: 310 578 4400
www.arup.com

#	DESCRIPTION	DATE

LEARNING CENTER
STRUCTURAL
MOMENT FRAME
ELEVATIONS

PROJECT NUMBER:

S311

8/10/2021 5:29:48 PM

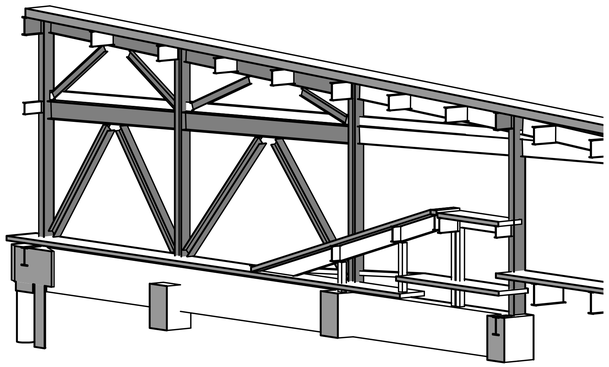

2 SPECIAL CONCENTRIC BRACED FRAME ISOMETRIC AT GL B

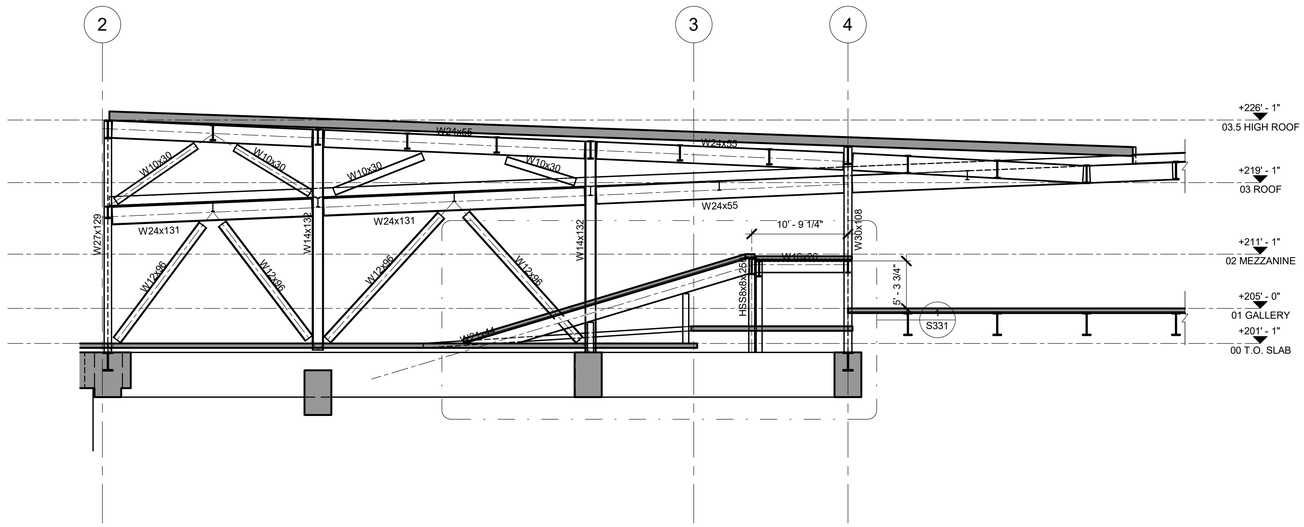

1 SPECIAL CONCENTRIC BRACED FRAME ELEVATION AT GL B (SFRS)
1/8" = 1'-0"

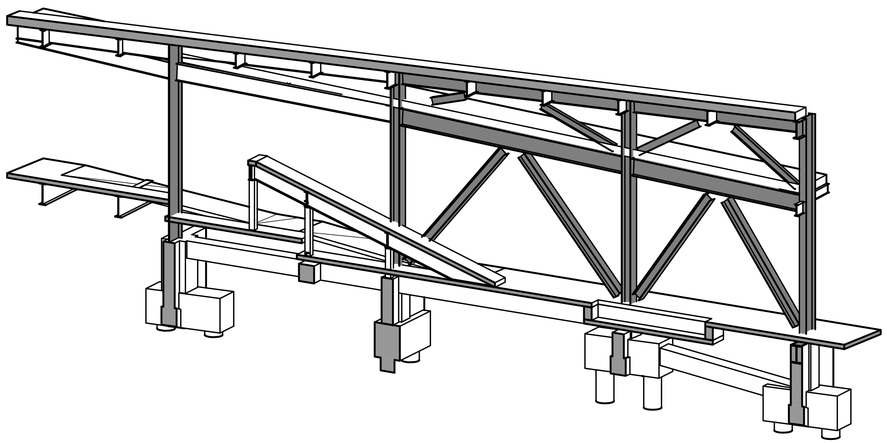

4 SPECIAL CONCENTRIC RACED FRAME ISOMETRIC AT GL C.5

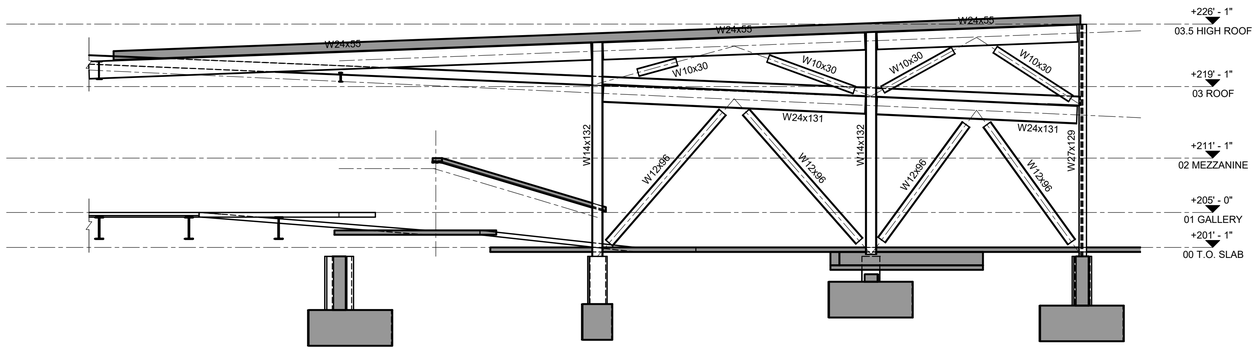

3 SPECIAL CONCENTRIC BRACED FRAME ELEVATION AT GL C.5 (SFRS)
1/8" = 1'-0"

NOT FOR CONSTRUCTION

09.AUG.21

belzberg architects
2321 MAIN STREET
SANTA MONICA, CA 90405
310.453.9611
www.belzbergarchitects.com

ARUP
Arup North America Ltd.
900 Wilshire Boulevard,
19th Floor
Los Angeles CA 90017
Tel: 310 578 4400
www.arup.com

#	DESCRIPTION	DATE

LEARNING CENTER
STRUCTURAL
BRACED FRAME
ELEVATIONS

PROJECT NUMBER:

S312

8/10/2021 5:29:49 PM

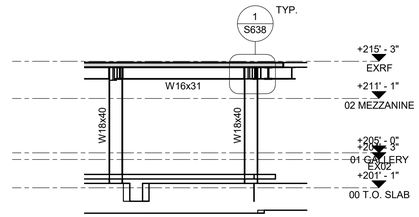

4 SPECIAL MOMENT FRAME AT ENTRY PAVILION - EAST (SFRS)
1/8" = 1'-0"

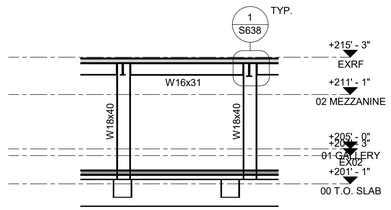

3 SPECIAL MOMENT FRAME AT ENTRY PAVILION - WEST (SFRS)
1/8" = 1'-0"

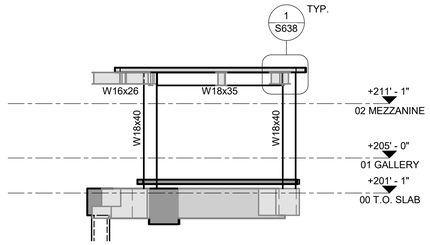

1 SPECIAL MOMENT FRAME AT ENTRY PAVILION - SOUTH (SFRS)
1/8" = 1'-0"

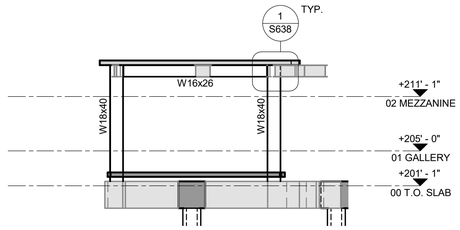

2 SPECIAL MOMENT FRAME AT ENTRY PAVILION - NORTH (SFRS)
1/8" = 1'-0"

NOT FOR CONSTRUCTION

09.AUG.21

ba
belzberg architects
2321 MAIN STREET
SANTA MONICA, CA 90405
310.453.9611

www.belzbergarchitects.com

ARUP
Arup North America Ltd.
900 Wilshire Boulevard,
19th Floor
Los Angeles CA 90017
Tel: 310 578 4400
www.arup.com

#	DESCRIPTION	DATE

ENTRY PAVILION STRUCTURAL MOMENT FRAME ELEVATIONS

PROJECT NUMBER:

S313

8/10/2021 5:29:49 PM

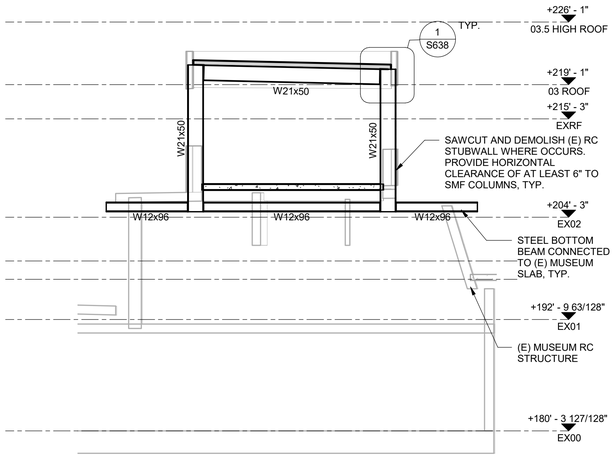

4 SPECIAL MOMENT FRAME AT BOXCAR PAVILION
1/8" = 1'-0"

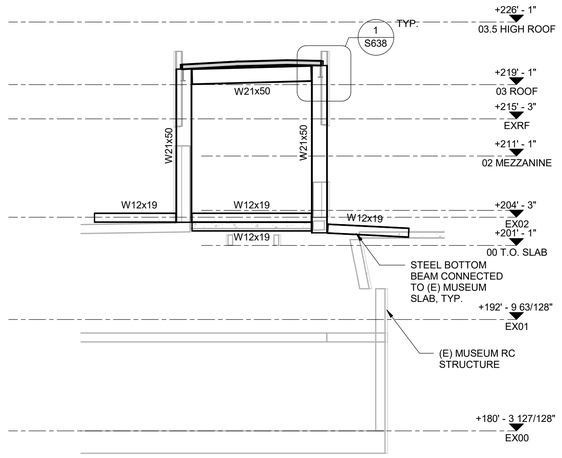

1 SPECIAL MOMENT FRAME AT BOXCAR PAVILION
1/8" = 1'-0"

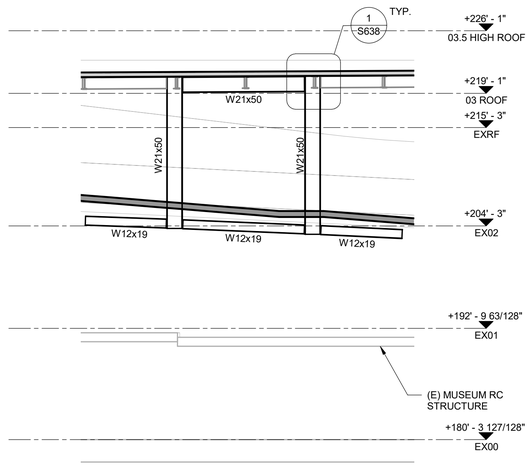

3 SPECIAL MOMENT FRAME AT BOXCAR PAVILION
1/8" = 1'-0"

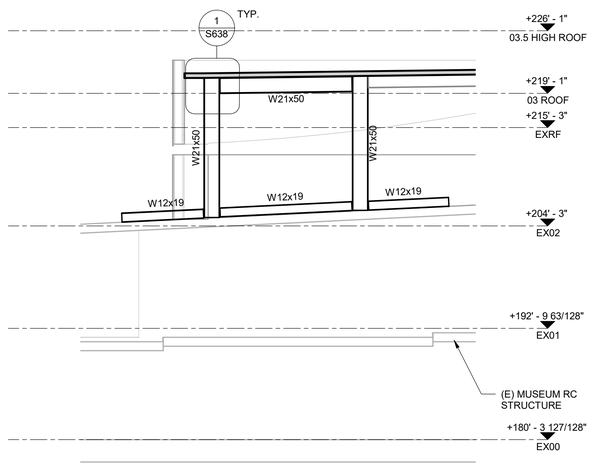

2 SPECIAL MOMENT FRAME AT BOXCAR PAVILION
1/8" = 1'-0"

NOT FOR CONSTRUCTION

09.AUG.21

belzberg architects
2321 MAIN STREET
SANTA MONICA, CA 90405
310.453.9611
www.belzbergarchitects.com

ARUP
Arup North America Ltd.
900 Wilshire Boulevard,
19th Floor
Los Angeles CA 90017
Tel: 310 578 4400
www.arup.com

#	DESCRIPTION	DATE

BOX CAR PAVILION
SPECIAL MOMENT
FRAME ELEVATIONS

PROJECT NUMBER:

S323

8/10/2021 5:29:49 PM

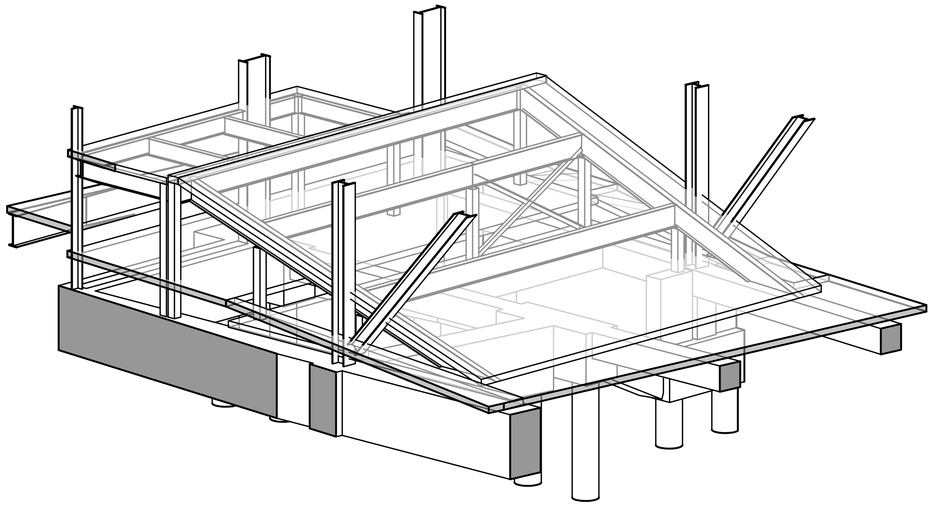

3 AUDITORIUM FRAMING - ISOMETRIC

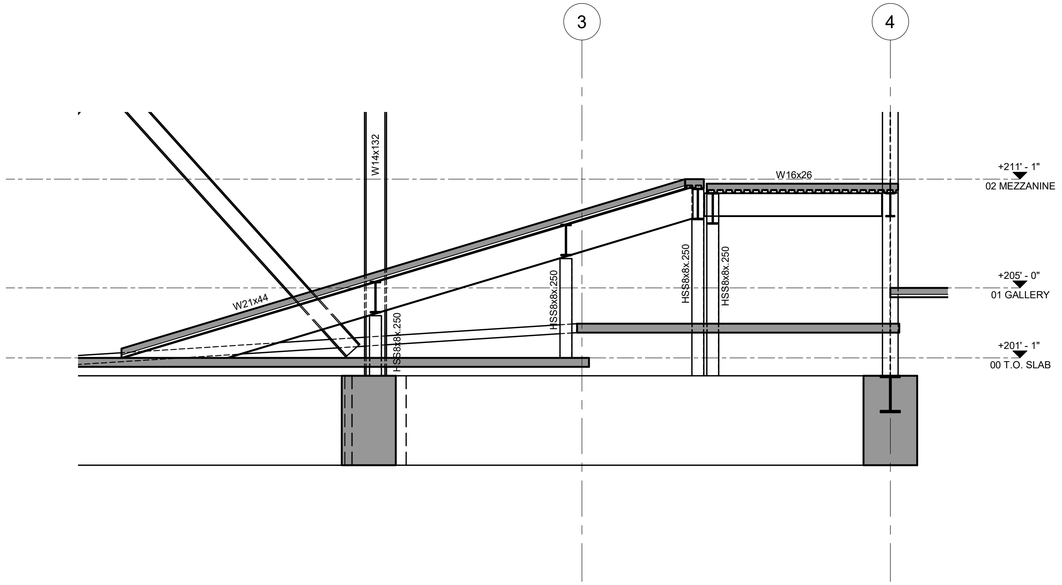

1 AUDITORIUM FRAMING - EAST
1/4" = 1'-0"

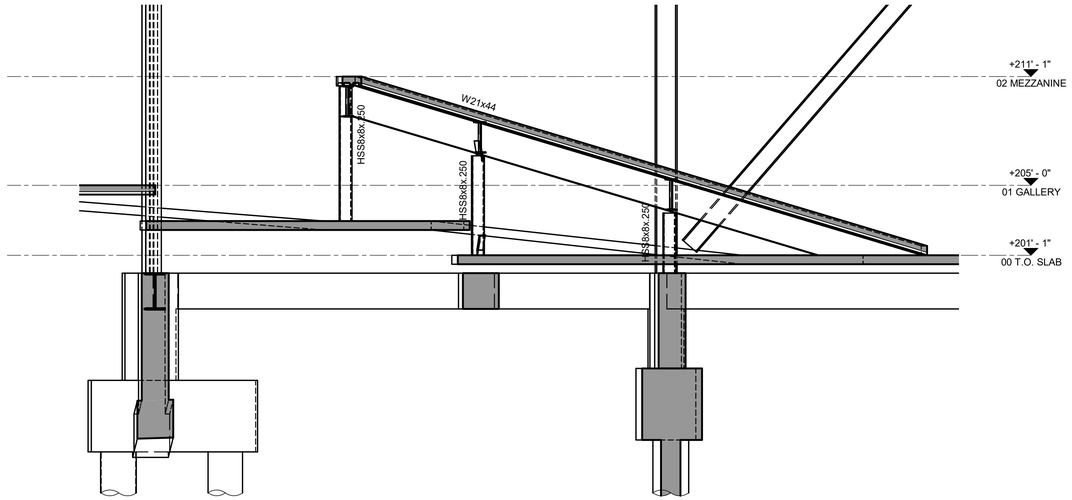

2 AUDITORIUM FRAMING - WEST
1/4" = 1'-0"

NOT FOR CONSTRUCTION

09.AUG.21

ba
belzberg architects
2321 MAIN STREET
SANTA MONICA, CA 90405
310.453.9611
www.belzbergarchitects.com

ARUP
Arup North America Ltd.
900 Wilshire Boulevard,
19th Floor
Los Angeles CA 90017
Tel: 310 578 4400
www.arup.com

#	DESCRIPTION	DATE

LEARNING CENTER
AUDITORIUM
SECTIONS

PROJECT NUMBER:

S331

8/10/2021 5:23:51 PM

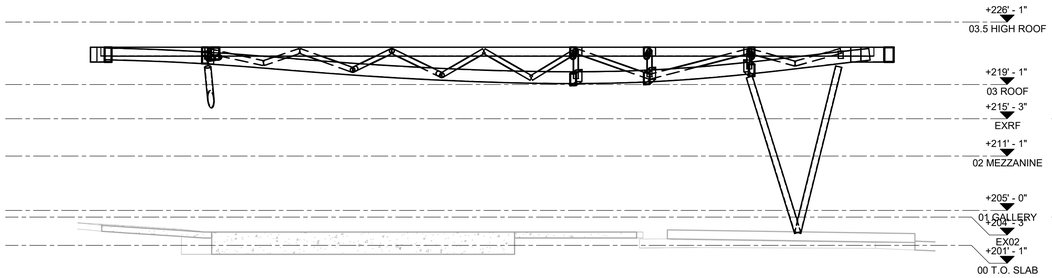

4 CANOPY ELEVATION AT SUPPORT
1/8" = 1'-0"

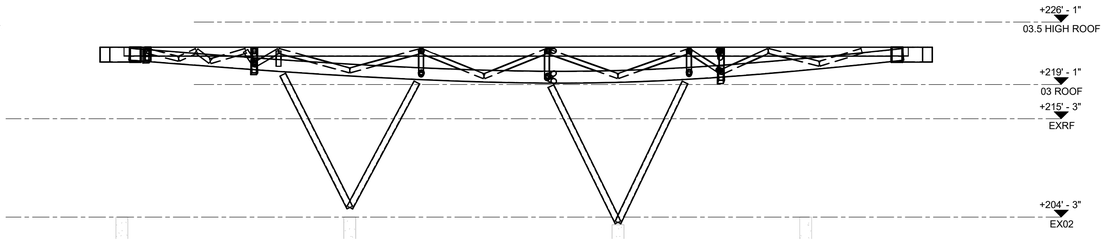

1 CANOPY ELEVATION AT SUPPORT
1/8" = 1'-0"

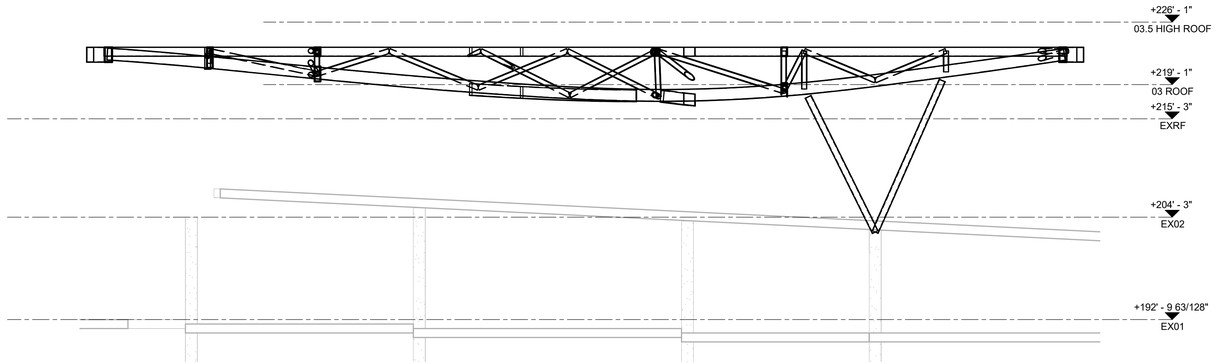

2 CANOPY ELEVATION AT SUPPORT
1/8" = 1'-0"

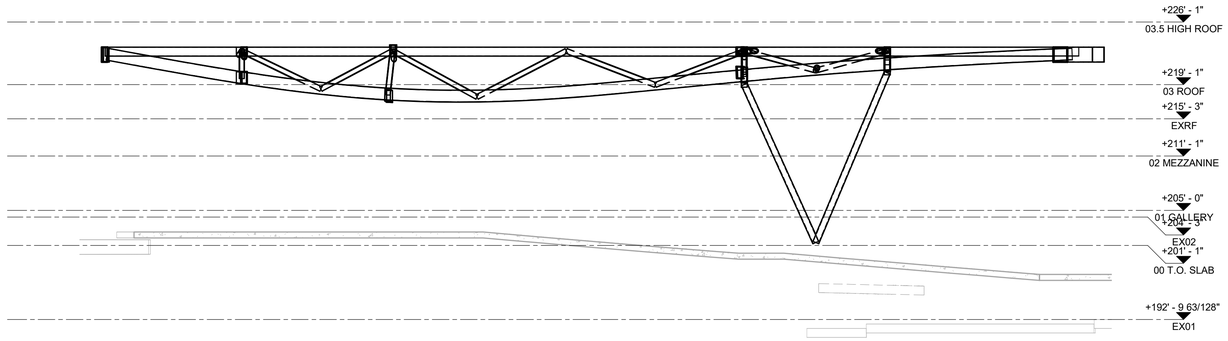

3 CANOPY ELEVATION AT SUPPORT
1/8" = 1'-0"

NOT FOR CONSTRUCTION

09.AUG.21

ba
belzberg architects
2321 MAIN STREET
SANTA MONICA, CA 90405
310.453.9611
www.belzbergarchitects.com

ARUP
Arup North America Ltd.
900 Wilshire Boulevard,
19th Floor
Los Angeles CA 90017
Tel: 310 578 4400
www.arup.com

#	DESCRIPTION	DATE

BOX CAR AND CANOPY ELEVATIONS

PROJECT NUMBER:

S332

8/10/2021 5:29:53 PM

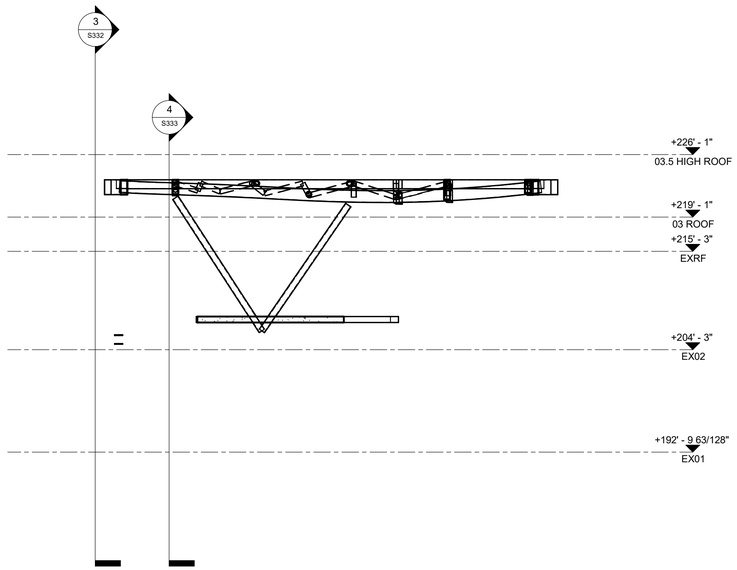

3 FRAMING ELEVATION
1/8" = 1'-0"

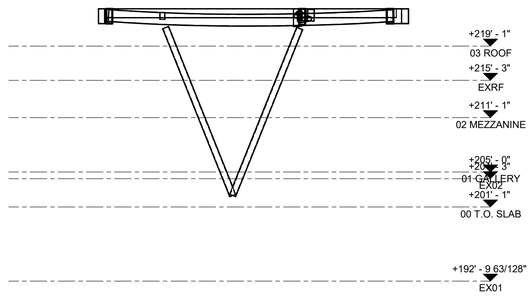

1 FRAMING ELEVATION
1/8" = 1'-0"

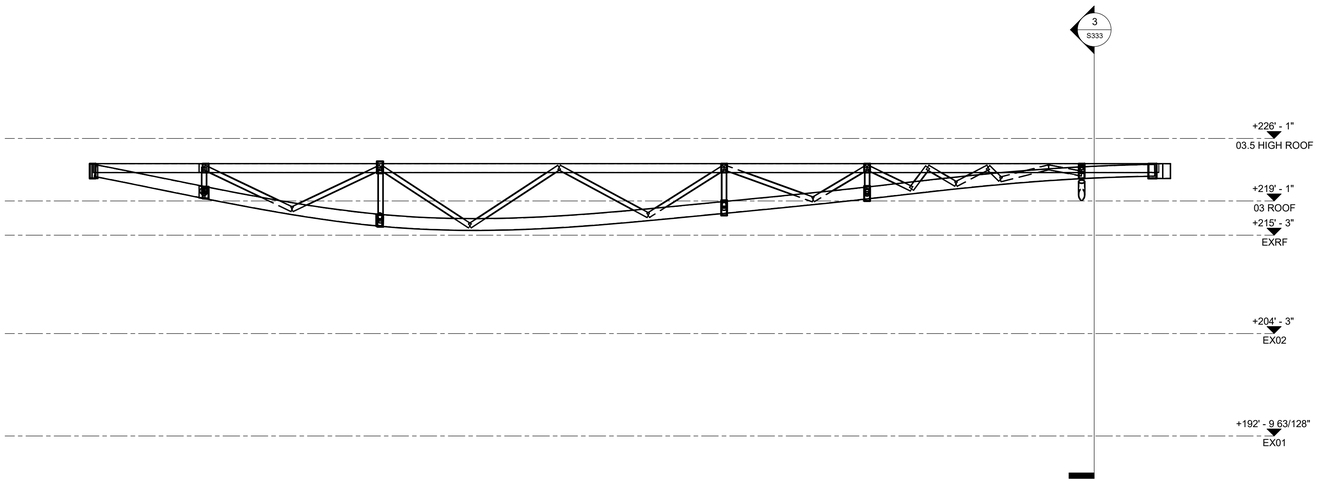

4 FRAMING ELEVATION
1/8" = 1'-0"

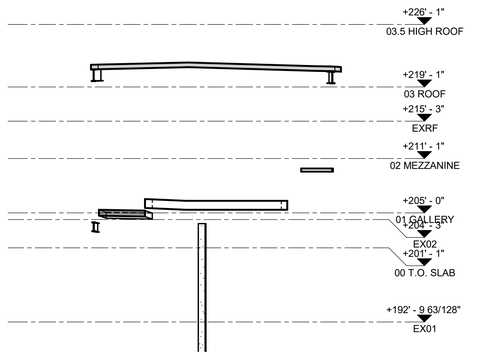

2 FRAMING ELEVATION
1/8" = 1'-0"

NOT FOR CONSTRUCTION

09.AUG.21

ba
belzberg architects
2321 MAIN STREET
SANTA MONICA, CA 90405
310.453.9611
www.belzbergarchitects.com

ARUP
Arup North America Ltd.
900 Wilshire Boulevard,
19th Floor
Los Angeles CA 90017
Tel: 310 578 4400
www.arup.com

#	DESCRIPTION	DATE

CANOPY ELEVATIONS

PROJECT NUMBER:

S333

8/10/2021 5:29:54 PM

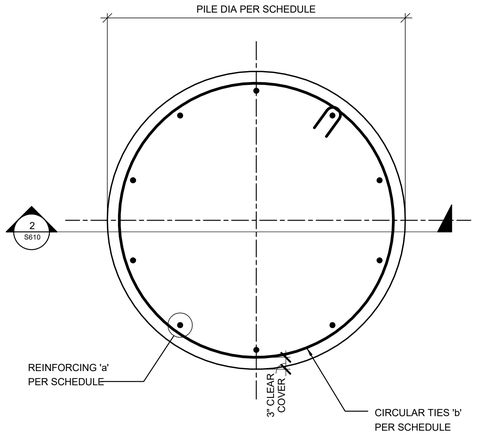

NOTES:

1. SEE 2/S610 OR 3/S610 FOR VERTICAL CROSS SECTION OF PILE.
2. REFER TO 6/S610 FOR REINFORCEING INFORMATION.
3. WHEN USING SPIRALS CONTRACTOR SHALL PROVIDE 1.5 ADDITIONAL TURNS OF SPIRALS AT TOP AND BOTTOM FOR ANCHORAGE.
4. WHEN USING SPIRALS PILES SHALL HAVE LAP SPLICE LENGTH NOT LESS THAN 48 x db WITH A MAXIMUM PITCH OF 1.5" ALONG THE SPLICE LENGTH.

5 TYPICAL PILE CROSS-SECTION

DRILLED PILE REINFORCING SCHEDULE							
PILE TYPE	PILE DIAMETER	BOTTOM OF PILE ELEVATION	REINFORCING 'a' ZONE 1	REINFORCING 'a' ZONE 2	REINFORCING 'b' ZONE 1	REINFORCING 'b' ZONE 2	NOTE
24A	24	TBC	(11) - #10	(6) - #10	#4 @ 6" O.C.	#4 @ 9" O.C.	
24B	24	TBC	(11) - #10	(6) - #10	#4 @ 6" O.C.	#4 @ 9" O.C.	
18A	18	TBC	(6) - #8	-	#4 @ 6" O.C.	-	
18B	18	TBC	(6) - #8	-	#4 @ 6" O.C.	-	

NOTES:

1. THE PILE TYPE IS CALLED OUT IN THE PILE CAP TAG. REFER TO THE PILE CAP SCHEDULE ON 1/S611 AND PILE CAP DRAWINGS ON S611 AND S612.

6 PILE SCHEDULE

12" = 1'-0"

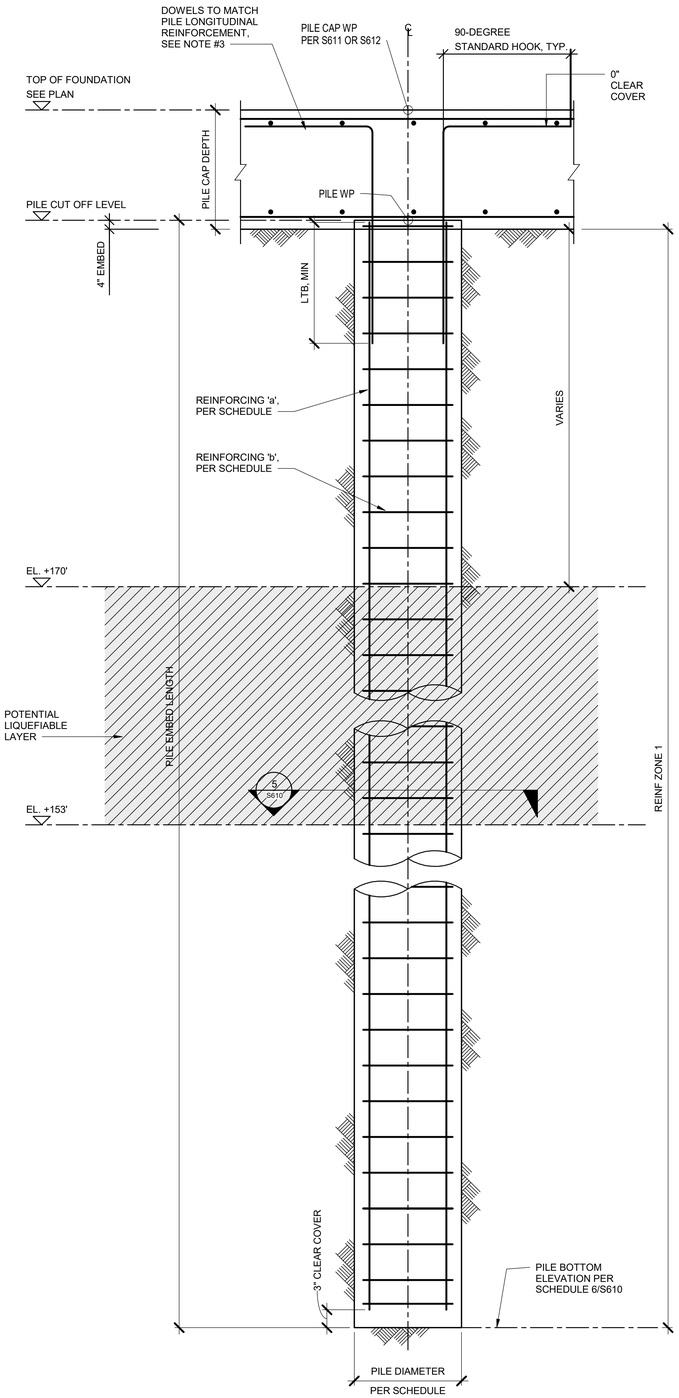

NOTES:

1. REFER TO PILE SCHEDULE ON 6/S610 FOR PILE AND REINFORCEMENT INFORMATION.
2. REFER TO DETAILS ON S611 AND S612 FOR PILE CAP INFORMATION.
3. AT CONTRACTOR'S OPTION REPLACE HOOKED DOWEL BARS WITH T-HEADED DOWEL BARS. T-HEADED BARS SHALL COMPLY WITH THE GENERAL NOTES. MINIMUM DEVELOPMENT LENGTH FOR T-HEADED BARS ARE GIVEN ON S620.
4. WHEN USING SPIRALS CONTRACTOR SHALL PROVIDE 1.5 ADDITIONAL TURNS OF SPIRALS AT TOP AND BOTTOM FOR ANCHORAGE.
5. WHEN USING SPIRALS PILES SHALL HAVE LAP SPLICE LENGTH NOT LESS THAN 48 x db WITH A MAXIMUM PITCH OF 1.5" ALONG THE SPLICE LENGTH.

4 TYPICAL 18" DIA PILE REINFORCEMENT

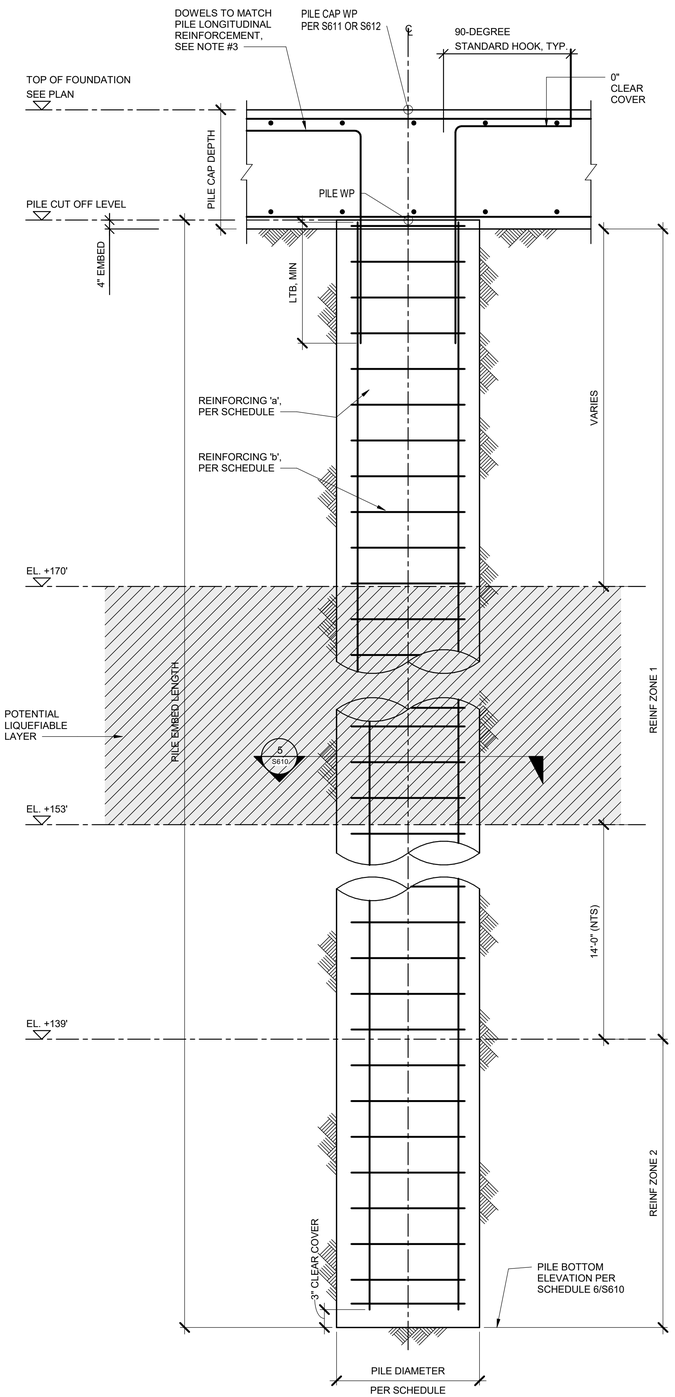

NOTES:

1. REFER TO PILE SCHEDULE ON 6/S610 FOR PILE AND REINFORCEMENT INFORMATION.
2. REFER TO DETAILS ON S611 AND S612 FOR PILE CAP INFORMATION.
3. AT CONTRACTOR'S OPTION REPLACE HOOKED DOWEL BARS WITH T-HEADED DOWEL BARS. T-HEADED BARS SHALL COMPLY WITH THE GENERAL NOTES. MINIMUM DEVELOPMENT LENGTH FOR T-HEADED BARS ARE GIVEN ON S620.
4. WHEN USING SPIRALS CONTRACTOR SHALL PROVIDE 1.5 ADDITIONAL TURNS OF SPIRALS AT TOP AND BOTTOM FOR ANCHORAGE.
5. WHEN USING SPIRALS PILES SHALL HAVE LAP SPLICE LENGTH NOT LESS THAN 48 x db WITH A MAXIMUM PITCH OF 1.5" ALONG THE SPLICE LENGTH.

2 TYPICAL 24" DIA PILE REINFORCEMENT

NOT FOR CONSTRUCTION

09.AUG.21

belzberg architects
2321 MAIN STREET
SANTA MONICA, CA 90405
310.453.9611
www.belzbergarchitects.com

ARUP
Arup North America Ltd.
900 Wilshire Boulevard,
19th Floor
Los Angeles CA 90017
Tel: 310 578 4400
www.arup.com

#	DESCRIPTION	DATE

STRUCTURAL PILE DETAILS

PROJECT NUMBER:

S610

8/10/2021 5:29:55 PM

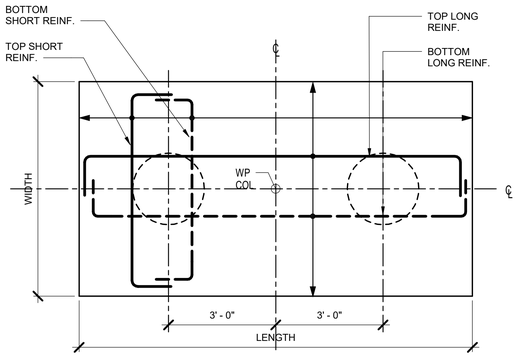

P-2-24A & P-2-24B

NOTE:

AT CONTRACTOR'S OPTION, MAY COMBINE T&B
REINF INTO CLOSED TIES OF SAME SIZE AND SPACING.

5 P-2* PILE CAP DETAIL

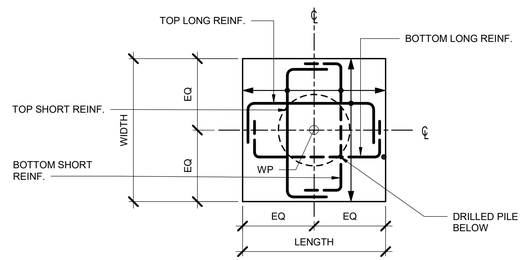

P-1-*

NOTE:

AT CONTRACTOR'S OPTION, MAY COMBINE T&B
REINF INTO CLOSED TIES OF SAME SIZE AND SPACING.

3 P-1* & P-2* PILE CAP DETAIL

PILE CAP SCHEDULE									
PILE CAP MARK (SEE NOTE)	PILE CAP DIMENSION			BOTTOM BARS		TOP BARS		SIDE BARS	DOWEL BAR FOR EACH SIDE
	LENGTH	WIDTH	THK.	LONG	SHORT	LONG	SHORT		
P-1-18A	2'-10"	2'-10"	3'-0"	TBC	TBC	TBC	TBC	TBC	TBC
P-1-24A	3'-4"	3'-4"	3'-0"	TBC	TBC	TBC	TBC	TBC	TBC
P-2-24A	9'-4"	3'-4"	4'-0"	TBC	TBC	TBC	TBC	TBC	TBC
P-2-24B	9'-4"	3'-4"	4'-0"	TBC	TBC	TBC	TBC	TBC	TBC
P-3-24B	9'-4"	8'-6"	3'-0"	TBC	TBC	TBC	TBC	TBC	TBC
P-4-24B	9'-4"	9'-4"	3'-0"	TBC	TBC	TBC	TBC	TBC	TBC

NOTES:

1. THE FIRST NUMBER IN THE PILE CAP TAG INDICATES THE NUMBER OF PILES.
2. THE SECOND NUMBER AND SECOND LETTER IN THE PILE TAG INDICATE THE PILE TYPE.
3. REFER TO SCHEDULE 6/S610 FOR PILE DIAMETER, LENGTH, AND REINFORCEMENT.
4. WORK THE ABOVE SCHEDULE WITH THE REINFORCEMENT DETAILS ON S611 AND S612.

1 PILE CAP SCHEDULE
12" = 1'-0"

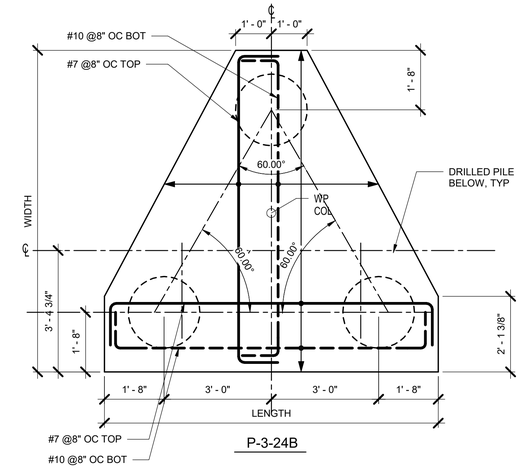

P-3-24B

6 P-3-24B PILE CAP DETAIL

NOTES:

1. SEE 2/S610 FOR INFORMATION NOT SHOWN.
2. CONTRACTOR SHALL LOCATE EXISTING BARS WITH NON-DESTRUCTIVE TESTING AND SHALL NOT DAMAGE EXISTING BARS DURING INSTALLION OF NEW BARS.
3. BARS EPOXIED INTO CONCRETE SHALL MAINTAIN THE MINIMUM EDGE DISTANCES PER ICC REPORT AND SHALL BE WITHIN THE REINFORCING CAGE OF THE FOOTING OR PILE CAP, UNO.
4. POST INSTALLED REINFORCING BAR SYSTEM PER GENERAL NOTES.
5. STIRRUPS, HOOPS OR SPIRALS IN COLUMN NOT SHOWN.
6. SEE X/SXX FOR CONSTRUCTION JOINT OF PILE CAP TO COLUMN AND TO SLAB ON GRADE.

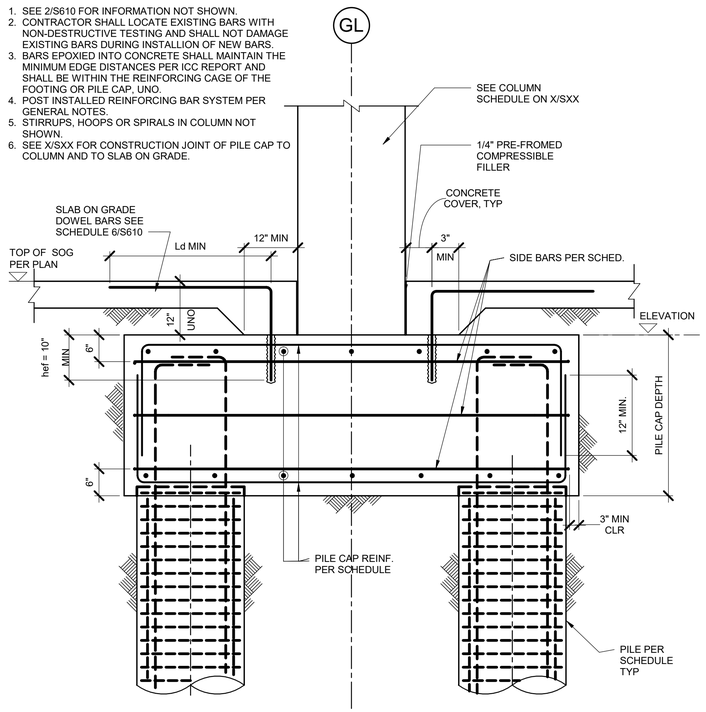

4 TYPICAL SECTION AT PILE CAP

NOTES:

1. SEE 2/S610 FOR INFORMATION NOT SHOWN.
2. CONTRACTOR SHALL LOCATE EXISTING BARS WITH NON-DESTRUCTIVE TESTING AND SHALL NOT DAMAGE EXISTING BARS DURING INSTALLION OF NEW BARS.
3. BARS EPOXIED INTO CONCRETE SHALL MAINTAIN THE MINIMUM EDGE DISTANCES PER ICC REPORT AND SHALL BE WITHIN THE REINFORCING CAGE OF THE FOOTING OR PILE CAP, UNO.
4. POST INSTALLED REINFORCING BAR SYSTEM PER GENERAL NOTES.
5. STIRRUPS, HOOPS OR SPIRALS IN COLUMN NOT SHOWN.
6. SEE X/SXX FOR CONSTRUCTION JOINT OF PILE CAP TO COLUMN AND TO SLAB ON GRADE.

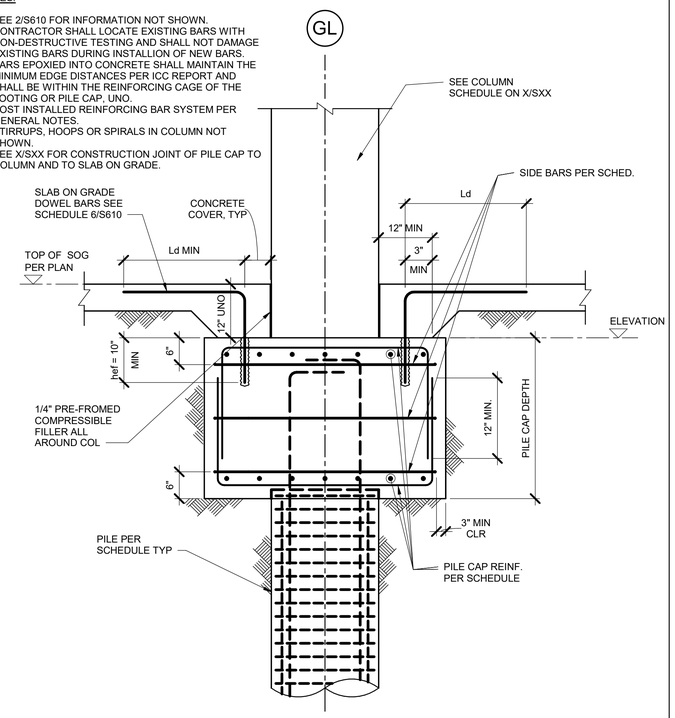

2 TYPICAL SECTION AT SINGLE PILE CAP

NOT FOR CONSTRUCTION

09.AUG.21

ba
belzberg architects
2321 MAIN STREET
SANTA MONICA, CA 90405
310.453.9611
www.belzbergarchitects.com

ARUP
Arup North America Ltd.
900 Wilshire Boulevard,
19th Floor
Los Angeles CA 90017
Tel: 310 578 4400
www.arup.com

#	DESCRIPTION	DATE

STRUCTURAL PILE CAP DETAILS

PROJECT NUMBER:

S611

8/10/2021 5:29:57 PM

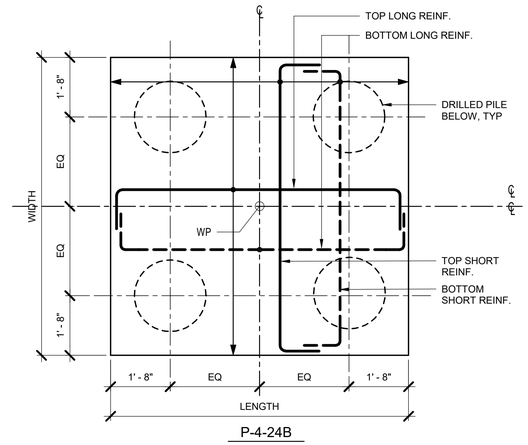

P-4-24B

1 P-4-24B PILE CAP DETAIL

NOT FOR CONSTRUCTION

09.AUG.21

belzberg architects
2321 MAIN STREET
SANTA MONICA, CA 90405
310.453.9611

www.belzbergarchitects.com

ARUP

Arup North America Ltd.
900 Wilshire Boulevard,
19th Floor
Los Angeles CA 90017
Tel: 310 578 4400
www.arup.com

#	DESCRIPTION	DATE

STRUCTURAL PILE CAP DETAILS

PROJECT NUMBER:

S612

8/10/2021 5:29:58 PM

HEADED BAR DEVELOPMENT LENGTH (Ldt) SCHEDULE (INCHES)				
BAR SIZE	f'c = 4000 psi	f'c = 5000 psi	f'c = 6000 psi	f'c = 8000 psi
# 3	6	6	6	6
# 4	8	7	7	7
# 5	10	9	8	8
# 6	12	11	10	10
# 7	14	12	11	11
# 8	16	14	13	13
# 9	18	16	14	14
# 10	20	18	16	16
# 11	22	20	18	18

NOTES:

1. REFERENCE CODE ACI 318. REFER TO THE GENERAL NOTES FOR THE VERSION OF THIS CODE.
2. THE ABOVE HEADED BAR DEVELOPMENT LENGTHS APPLY TO NORMAL WEIGHT CONCRETE ONLY.
3. THE ABOVE HEADED BAR DEVELOPMENT LENGTHS ARE FOR UNCOATED REINFORCEMENT. FOR EPOXY COATED BARS, MULTIPLY THE SPECIFIED DEVELOPMENT LENGTHS BY 1.2.
4. CLEAR COVER FOR BAR SHALL NOT BE LESS THAN 2db; AND CLEAR SPACING BETWEEN BARS SHALL NOT BE LESS THAN 4db.
5. BAR SIZE SHALL NOT EXCEED #11.
6. THE ABOVE BAR DEVELOPMENT LENGTHS ARE FOR REBARS Fy = 60 KSI. FOR OTHER GRADES, MULTIPLY THE SPECIFIED LENGTHS BY Fy/60 KSI. Fy SHALL NOT EXCEED 60 KSI FOR HEADED BARS.
7. THE ABOVE BAR DEVELOPMENT LENGTHS ARE CALCULATED USING THE 28-DAY CONCRETE COMPRESSIVE STRENGTH BASED ON CYLINDER SPECIMEN

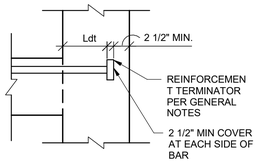

5 HEADED BAR DEVELOPMENT LENGTH (Ldt) SCHEDULE

HOOKED BAR DEVELOPMENT LENGTH (Ldh) SCHEDULE (INCHES)				
BAR SIZE	f'c = 4000 psi	f'c = 5000 psi	f'c = 6000 psi	f'c = 8000 psi
# 3	6	6	6	6
# 4	7	6	6	6
# 5	9	8	7	6
# 6	10	9	9	8
# 7	12	11	10	9
# 8	14	12	11	10
# 9	15	14	13	11
# 10	17	16	14	12
# 11	19	17	16	14

NOTES:

1. REFERENCE CODE ACI 318. REFER TO THE GENERAL NOTES FOR THE VERSION OF THIS CODE.
2. db INDICATES DIAMETER OF THE BAR.
3. Ldh SHALL NOT BE LESS THAN GREATER OF 8db AND 6 INCHES.
4. THE ABOVE BAR DEVELOPMENT LENGTHS APPLY TO NORMAL WEIGHT CONCRETE. DIVIDE 0.75 FOR LIGHTWEIGHT CONCRETE.
5. THE ABOVE BAR DEVELOPMENT LENGTHS ARE FOR UNCOATED REINFORCEMENT. FOR EPOXY COATED BARS, MULTIPLY THE SPECIFIED DEVELOPMENT LENGTHS BY 1.2
6. HOOKS SHALL NOT BE CONSIDERED EFFECTIVE IN DEVELOPING BARS IN COMPRESSION.
7. THE ABOVE HOOKED BAR DEVELOPMENT LENGTHS ARE FOR REBARS Fy = 60 KSI. FOR OTHER GRADES, MULTIPLY THE SPECIFIED LENGTHS BY Fy/60 KSI.
8. THE ABOVE HOOKED BAR DEVELOPMENT LENGTHS ARE CALCULATED USING THE 28-DAY CONCRETE COMPRESSIVE STRENGTH BASED ON CYLINDER SPECIMEN.

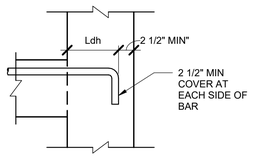

6 HOOKED BAR DEVELOPMENT LENGTH (Ldh) SCHEDULE

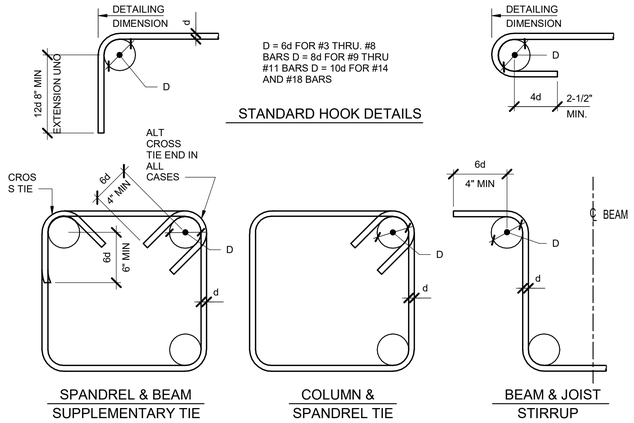

3 TYPICAL BAR BEND SCHEDULE

BAR DEVELOPMENT LENGTH IN COMPRESSION (Ldc) SCHEDULE (INCHES)				
BAR SIZE	f'c = 4000 psi	f'c = 5000 psi	f'c = 6000 psi	f'c = 8000 psi
# 3	8	7	7	7
# 4	10	9	9	9
# 5	12	12	12	12
# 6	15	14	14	14
# 7	17	16	16	16
# 8	19	18	18	18
# 9	22	21	21	21
# 10	25	23	23	23
# 11	27	26	26	26
# 14	33	31	31	31
# 18	43	41	41	41

NOTES:

1. REFERENCE CODE ACI 318. REFER TO THE GENERAL NOTES FOR THE VERSION OF THIS CODE.
2. THE ABOVE BAR DEVELOPMENT LENGTHS APPLY TO NORMAL WEIGHT CONCRETE. DIVIDE 0.75 FOR LIGHTWEIGHT CONCRETE.
3. THE ABOVE BAR DEVELOPMENT LENGTHS ARE FOR REBARS Fy = 60 KSI. FOR OTHER GRADES, MULTIPLY THE SPECIFIED LENGTHS BY Fy/60 KSI.
4. THE ABOVE BAR DEVELOPMENT LENGTHS ARE CALCULATED USING THE 28-DAY CONCRETE COMPRESSIVE STRENGTH BASED ON CYLINDER SPECIMEN.

4 BAR DEVELOPMENT LENGTH IN COMPRESSION (Ldc) SCHEDULE

CLASS "B" LAP SPLICE (LTB) SCHEDULE (INCHES)																
BAR SIZE	f'c = 4000 psi				f'c = 5000 psi				f'c = 6000 psi				f'c = 8000 psi			
	CONDITION 1		CONDITION 2		CONDITION 1		CONDITION 2		CONDITION 1		CONDITION 2		CONDITION 1		CONDITION 2	
	TOP BARS	OTHER BARS	TOP BARS	OTHER BARS	TOP BARS	OTHER BARS	TOP BARS	OTHER BARS	TOP BARS	OTHER BARS	TOP BARS	OTHER BARS	TOP BARS	OTHER BARS	TOP BARS	OTHER BARS
# 3	25	19	37	28	22	17	33	25	20	16	30	23	18	14	26	20
# 4	33	25	49	37	29	23	44	34	27	21	40	31	23	18	35	27
# 5	41	31	61	47	36	28	54	42	33	26	50	38	29	22	43	33
# 6	49	37	73	56	44	34	65	50	40	31	59	46	35	27	52	40
# 7	71	54	106	81	63	49	95	73	58	45	86	67	50	39	75	58
# 8	81	62	121	93	72	56	108	83	66	51	99	76	57	44	86	66
# 9	91	70	136	105	81	63	122	94	74	57	111	86	64	50	96	74
# 10	102	79	153	118	92	71	137	106	84	64	125	96	72	56	108	84
# 11	114	87	170	131	102	78	152	117	93	71	139	107	80	62	120	93

NOTES:

1. REFERENCE CODE ACI318. REFER TO THE GENERAL NOTES FOR THE VERSION OF THIS CODE.
2. LAP SPLICE LENGTH SHALL NOT BE LESS THAN 12 INCHES
3. db INDICATES DIAMETER OF BAR
4. TOP BARS ARE HORIZONTAL BARS WITH MORE THAN 12 INCHES OF CONCRETE CAST IN THE MEMBER BELOW THE REINFORCEMENT
5. DEFINITIONS OF "CONDITION 1" AND "CONDITION 2" SHALL BE AS FOLLOWS:

   CONDITION 1: WHEN EITHER ONE OF THE FOLLOWING SET IS SATISFIED:

   SET A: a) CLEAR BAR SPACING GREATER THAN OR EQUAL TO db

   b) CLEAR BAR COVER GREATER THAN OR EQUAL TO db

   c) TIES OR STIRRUPS THROUGHOUT Ld NOT LESS THAN THE CODE MINIMUM

   SET B: a) CLEAR BAR SPACING GREATER THAN OR EQUAL TO 2db

   b) CLEAR BAR COVER GREATER THAN OR EQUAL TO db

   CONDITION 2: USED WHERE CONDITION 1 IS NOT SATISFIED
6. THE ABOVE LAP SPLICE LENGTHS APPLY TO NORMAL WEIGHT CONCRETE. DIVIDE BY 0.75 FOR LIGHTWEIGHT CONCRETE
7. THE ABOVE LAP SPLICE LENGTHS ARE FOR UNCOATED REINFORCEMENT. FOR EPOXY COATED BARS, MODIFY THE LISTED VALUES PER FOLLOWING:

   a) CLEAR BAR COVER LESS THAN 3db OR CLEAR BAR SPACING LESS THAN 6db, MULTIPLY Ld VALUES OF "OTHER BARS" BY 1.5 AND Ld VALUES OF "TOP BARS" BY 1.31

   b) ALL OTHER CONDITIONS, MULTIPLY Ld BY 1.2
8. USE CLASS "B" SPLICES UNLESS NOTED OTHERWISE. CLASS "A" LAP SPLICES ARE PERMITTED WHEN THE AREA OF REINFORCEMENT PROVIDED IS AT LEAST TWICE THAT REQUIRED BY ANALYSIS OVER THE ENTIRE LENGTH OF THE SPLICE AND ONE HALF OR LESS OF THE TOTAL REINFORCEMENT IS SPLICED WITHIN THE REQUIRED LAP SPLICE. USE CLASS "A" WHERE SPECIFICALLY NOTED ON DRAWINGS.
9. FOR CLASS "A" SPLICES, USE SAME VALUES AS PER Ld.
10. WHEN SPLICING DIFFERENT SIZE BARS, SPLICE LENGTH SHALL BE THE LARGER OF THE Ld OF LARGER BAR OR LAP SPLICE LENGTH OF SMALLER BAR
11. AT CONCRETE WALLS, SPLICES IN HORIZONTAL REINFORCEMENTS SHALL BE STAGGERED, MINIMUM 24 INCHES APART AT ALTERNATING BARS
12. AT CONCRETE WALLS WITH TWO CURTAINS OF REINFORCEMENTS, SPLICES IN THE CURTAINS SHALL NOT OCCUR IN THE SAME LOCATION. STAGGER LAP SPLICES MINIMUM 24 INCHES APART
13. ALL WALL AND COLUMN TO FOOTING DOWELS SHALL HAVE CLASS "B" LAP SPLICES
14. LAP SPLICES SHALL NOT BE USED FOR BARS LARGER THAN #11
15. LAP SPLICES OF BARS IN A BUNDLE SHALL BE BASED ON THE LAP SPLICE LENGTH REQUIRED FOR INDIVIDUAL BARS WITHIN A BUNDLE. INCREASE 20 PERCENT FOR THREE-BAR BUNDLE, AND 33 PERCENT FOR FOUR-BAR BUNDLE. INDIVIDUAL BAR SPLICES WITHIN A BUNDLE SHALL NOT OVERLAP. ENTIRE BUNDLES SHALL NOT BE LAP SPLICED.
16. THE ABOVE LAP SPLICE LENGTHS ARE FOR REBARS Fy = 60 KSI. FOR OTHER GRADES, MULTIPLY THE SPECIFIED LENGTHS BY Fy/60 KSI.
17. THE ABOVE LAP SPLICE LENGTHS ARE CALCULATED USING THE 28-DAY CONCRETE COMPRESSIVE STRENGTH BASED ON CYLINDER SPECIMEN

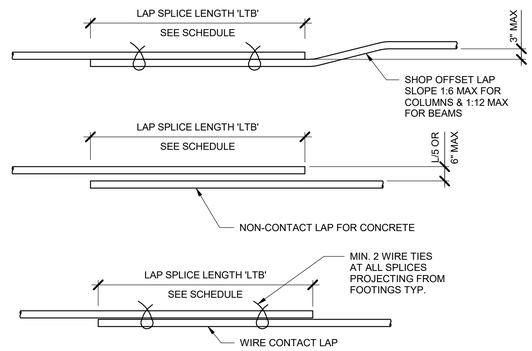

2 TENSION LAP SPLICE LENGTH (LTB) SCHEDULE

NTS

NOT FOR CONSTRUCTION

09.AUG.21

belzberg architects
2321 MAIN STREET
SANTA MONICA, CA 90405
310.453.9611
www.belzbergarchitects.com

ARUP
Arup North America Ltd.
900 Wilshire Boulevard,
19th Floor
Los Angeles CA 90017
Tel: 310 578 4400
www.arup.com

#	DESCRIPTION	DATE

REINFORCED SCHEDULE LAP AND DEVELOPMENT LENGTH SCHEDULE

PROJECT NUMBER:

S620

8/10/2021 5:30:02 PM

BAR DEVELOPMENT LENGTH (Ld) SCHEDULE (INCHES)																
BAR SIZE	f'c = 4000 psi				f'c = 5000 psi				f'c = 6000 psi				f'c = 8000 psi			
	CONDITION 1		CONDITION 2		CONDITION 1		CONDITION 2		CONDITION 1		CONDITION 2		CONDITION 1		CONDITION 2	
	TOP BARS	OTHER BARS	TOP BARS	OTHER BARS	TOP BARS	OTHER BARS	TOP BARS	OTHER BARS	TOP BARS	OTHER BARS	TOP BARS	OTHER BARS	TOP BARS	OTHER BARS	TOP BARS	OTHER BARS
# 3	19	15	28	22	17	13	25	20	16	12	23	18	16	12	20	16
# 4	25	19	37	29	23	17	34	26	21	16	31	24	18	14	27	21
# 5	31	24	47	36	28	22	42	32	26	20	38	30	22	17	33	26
# 6	37	29	56	43	34	26	50	39	31	24	46	35	27	21	40	31
# 7	54	42	81	63	49	38	73	56	45	34	67	51	39	30	58	45
# 8	62	48	93	72	56	43	83	64	51	39	76	59	44	34	66	51
# 9	70	54	105	81	63	48	94	72	57	44	86	66	50	38	74	57
# 10	79	61	118	91	71	54	106	81	64	50	96	74	56	43	84	64
# 11	87	67	131	101	78	60	117	90	71	55	107	82	62	48	93	71
# 14	105	81	157	121	94	72	141	108	86	66	128	99	74	57	111	86
# 18	140	108	209	161	125	96	187	144	114	88	171	132	99	76	148	114

NOTES:

1. REFERENCE CODE ACI318. REFER TO THE GENERAL NOTES FOR THE VERSION OF THIS CODE.
2. Ld SHALL NOT BE LESS THAN 12 INCHES.
3. db INDICATES DIAMETER OF BAR.
4. TOP BARS ARE HORIZONTAL BARS WITH MORE THAN 12 INCHES OF CONCRETE CAST IN THE MEMBER BELOW THE REINFORCEMENT.
5. DEFINITIONS OF "CONDITION 1" AND "CONDITION 2" SHALL BE AS FOLLOWS:

   CONDITION 1: WHEN EITHER ONE OF THE FOLLOWING SET IS SATISFIED:

   SET A: a) CLEAR BAR SPACING GREATER THAN OR EQUAL TO db

   b) CLEAR BAR COVER GREATER THAN OR EQUAL TO db

   c) TIES OR STIRRUPS THROUGHOUT Ld NOT LESS THAN THE CODE MINIMUM

   SET B: a) CLEAR BAR SPACING GREATER THAN OR EQUAL TO 2db

   b) CLEAR BAR COVER GREATER THAN OR EQUAL TO db

   CONDITION 2: USED WHERE CONDITION 1 IS NOT SATISFIED
6. THE ABOVE BAR DEVELOPMENT LENGTHS APPLY TO NORMAL WEIGHT CONCRETE. DIVIDE BY 0.75 FOR LIGHTWEIGHT CONCRETE. SEE REQUIREMENTS IN ACI 318 FOR LIGHTWEIGHT CONCRETE.
7. THE ABOVE BAR DEVELOPMENT LENGTHS ARE FOR UNCOATED REINFORCEMENT. FOR EPOXY COATED BARS, MODIFY THE LISTED VALUES PER FOLLOWING:

   a) SEE REQUIREMENTS IN ACI 318 FOR EPOXY COATED BARS.

   b) CLEAR BAR COVER LESS THAN 3db OR CLEAR BAR SPACING LESS THAN 6db, MULTIPLY Ld VALUES OF "OTHER BARS" BY 1.5 AND Ld VALUES OF "TOP BARS" BY 1.31

   c) ALL OTHER CONDITIONS, MULTIPLY Ld BY 1.2
8. THE ABOVE BAR DEVELOPMENT LENGTHS ARE FOR REBARS Fy = 60 KSI. FOR OTHER GRADES, MULTIPLY THE SPECIFIED LENGTHS BY Fy/60 KSI.
9. THE ABOVE BAR DEVELOPMENT LENGTHS ARE CALCULATED USING THE 28-DAY CONCRETE COMPRESSIVE STRENGTH BASED ON CYLINDER SPECIMEN.

3 BAR DEVELOPMENT (Ld) SCHEDULE

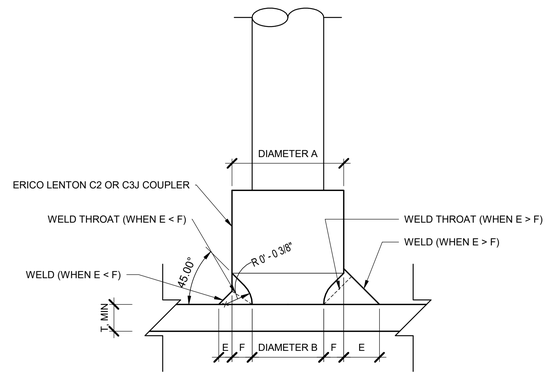

REBAR SIZE	COUPLER	REBAR GRADE	DIAMETER A	DIAMETER B	FILLET WELD, E	WELD ELECTRODE	MIN PLATE THK, T	PLATE GRADE
#4	EL12C2	A615-60	3/4"	7/16"	3/16"	E80XX	3/8"	A572-50
#5	EL16C2	A615-60	1"	9/16"	3/16"	E80XX	3/8"	A572-50
#6	EL20C3J	A615-60	1-1/4"	7/8"	1/4"	E80XX	3/8"	A572-50
#7	EL22C3J	A615-60	1-1/4"	3/4"	5/16"	E80XX	3/8"	A572-50
#8	EL25C3J	A615-60	1-9/16"	1"	5/16"	E80XX	3/8"	A572-50
#9	EL28C3J	A615-60	1-9/16"	15/16"	7/16"	E80XX	3/8"	A572-50
#10	EL32C3J	A615-60	2"	15/16"	3/16"	E80XX	3/8"	A572-50
#11	EL36C3J	A615-60	2"	1-1/8"	1/2"	E80XX	3/8"	A572-50

NOTES:

1. WELD SIZES ARE FOR TYPE II COUPLERS PER ACI318 AND SHALL BE USED WITH ERICO LENTON C2 AND C3J COUPLERS ONLY.
2. WELDS SHALL BE IN ACCORDANCE WITH AWS D1.1
3. BUTT WELD LENGTH 'F' EQUALS (A-B)/2

4 TYPICAL WELD TO LENTON C2 OR C3J

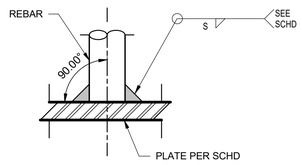

REBAR BUTT WELD SCHEDULE					
REBAR SIZE	REBAR GRADE	WELD SIZE, S	WELD ELECTRODE	MIN PLATE THK, T	PLATE GRADE
#3	A706-60	3/16"	E80XX	1/4"	A572-50
#4	A706-60	1/4"	E80XX	1/4"	A572-50
#5	A706-60	5/16"	E80XX	3/8"	A572-50
#6	A706-60	3/8"	E80XX	3/8"	A572-50
#7	A706-60	7/16"	E80XX	1/2"	A572-50
#8	A706-60	1/2"	E80XX	1/2"	A572-50
#9	A706-60	9/16"	E80XX	5/8"	A572-50
#10	A706-60	5/8"	E80XX	5/8"	A572-50
#11	A706-60	11/16"	E80XX	3/4"	A572-50

NOTES:

1. WHERE MIN PL THK IN TABLE ABOVE EXCEEDS THAT SHOWN ON REFERENCING DETAIL, INCREASE PL THK TO MATCH MIN PL THK IN SCHEDULE.
2. WELDS SHALL BE IN ACCORDANCE WITH AWS D1.1 AND D1.4.
3. REBAR BUTT WELD MAY BE USED IN LIEU OF WELDABLE HALF COUPLERS AT CONTRACTOR'S OPTION IN ALL DETAILS, UNLESS EXPRESSLY EXCLUDED.

2 REBAR BUTT WELD TO EMBED

NOT FOR CONSTRUCTION

09.AUG.21

belzberg architects
2321 MAIN STREET
SANTA MONICA, CA 90405
310.453.9611
www.belzbergarchitects.com

ARUP
Arup North America Ltd.
900 Wilshire Boulevard,
19th Floor
Los Angeles CA 90017
Tel: 310 578 4400
www.arup.com

#	DESCRIPTION	DATE

REINFORCED SCHEDULE LAP AND DEVELOPMENT LENGTH SCHEDULE

PROJECT NUMBER:

S621

8/10/2021 5:30:05 PM

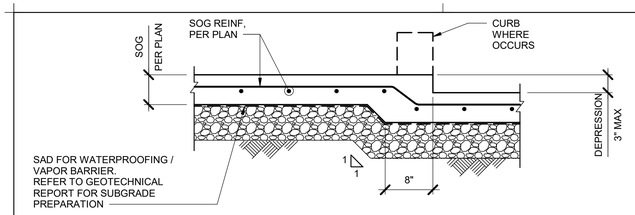

A -- DEPRESSION/STEP 3" MAX

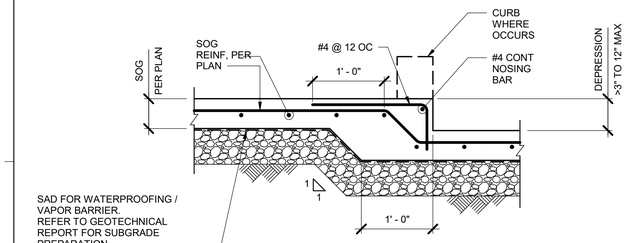

B -- DEPRESSION/STEP >3" TO 12" MAX

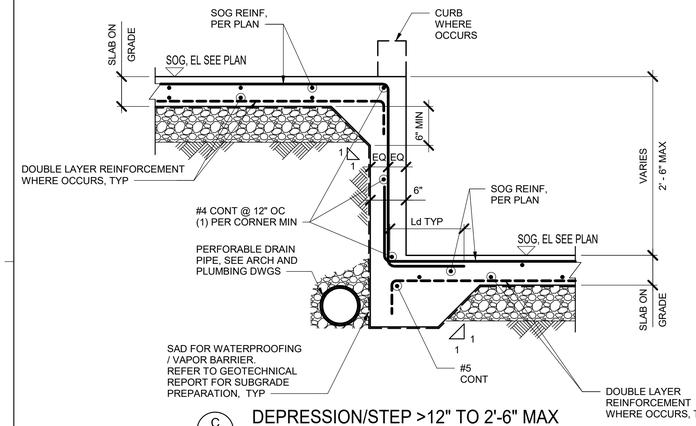

C -- DEPRESSION/STEP >12" TO 2'-6" MAX

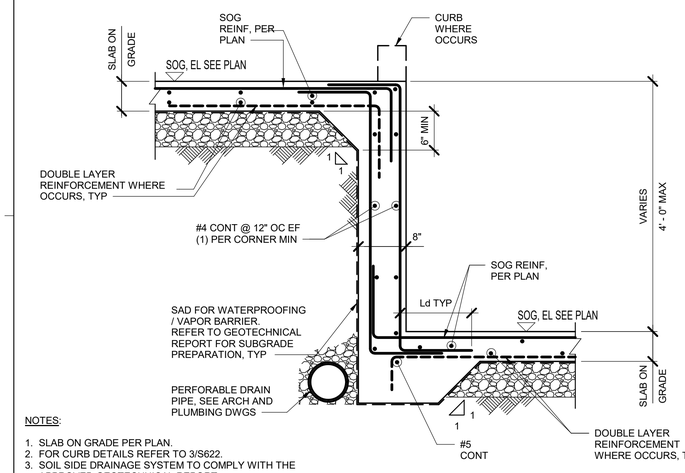

NOTES:

1. SLAB ON GRADE PER PLAN.
2. FOR CURB DETAILS REFER TO 3/S622.
3. SOIL SIDE DRAINAGE SYSTEM TO COMPLY WITH THE APPROVED GEOTECHNICAL REPORT.

D -- DEPRESSION/STEP >2'-6"" TO 4'-0" MAX

6 SLAB ON GRADE DEPRESSION

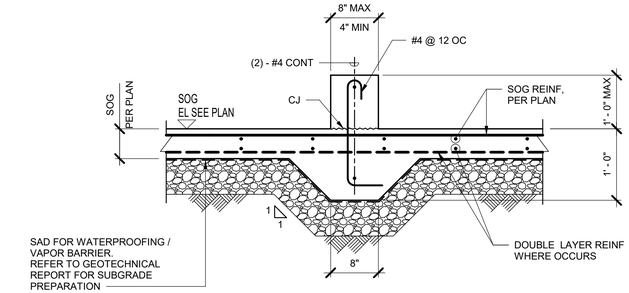

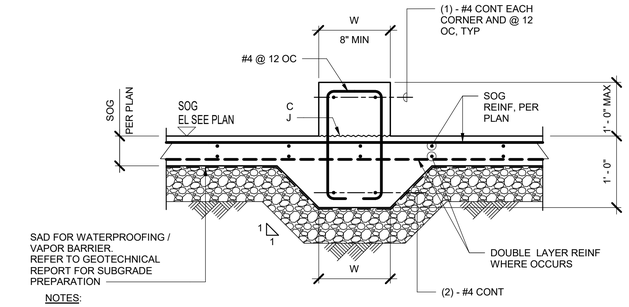

NOTES:

1. SLAB ON GRADE PER PLAN.
2. SEE ARCHITECTURAL DRAWINGS FOR LOCATION AND HEIGHT OF CURB.

3 CONCRETE CURB ON GRADE

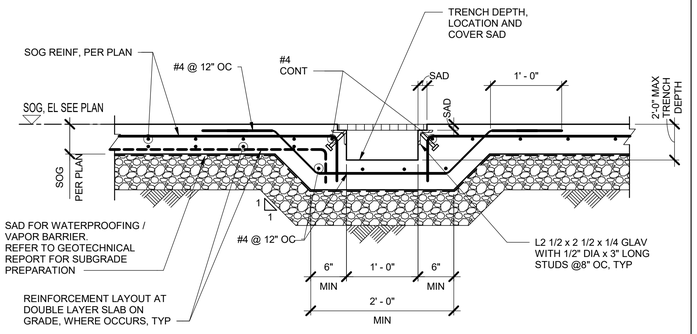

NOTES:

1. SLAB ON GRADE PER PLAN.

4 SLAB ON GRADE DRAINAGE TRENCH DETAIL

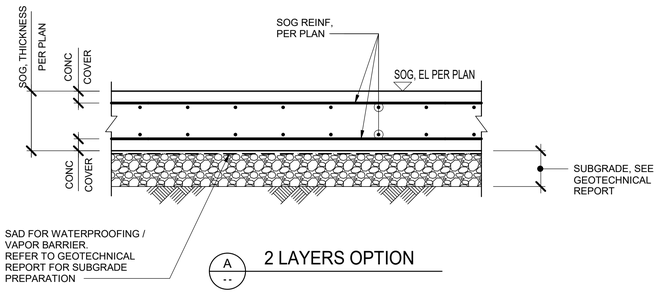

A -- 2 LAYERS OPTION

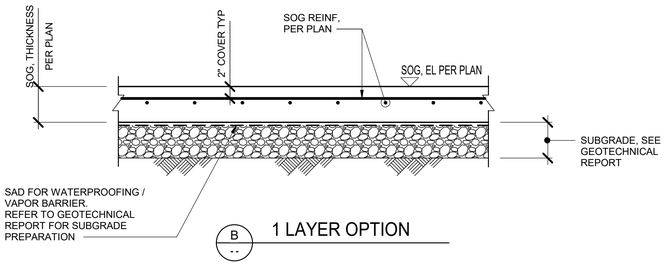

B -- 1 LAYER OPTION

NOTES:

1. SEE PLAN FOR SLAB THICKNESS AND REINFORCING.
2. SEE GEOTECHNICAL REPORT FOR SLAB ON GRADE SUPPORT, COMPACTION AND SUBGRADE PREPARATION.
3. REINFORCEMENT TO EXTEND TO WITHIN 2 IN OF THE SLAB SIDE EDGE. ALSO REFER TO SLAB EDGE DETAILS.

1 SLAB ON GRADE

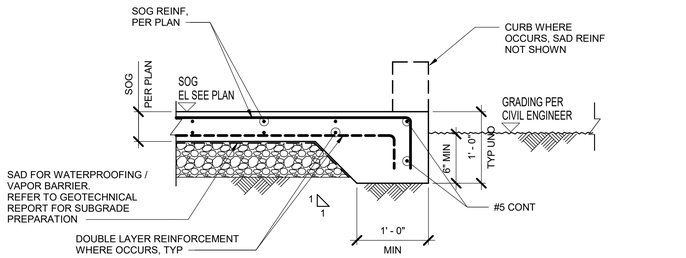

A -- AT GRADING

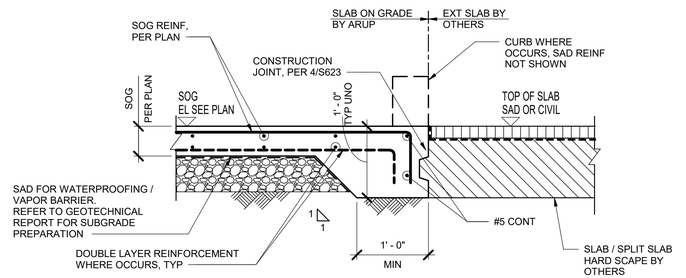

B -- AT EXTERIOR SLAB

NOTES:

1. SLAB ON GRADE PER PLAN.
2. CURB LOCATION AND HEIGHT SEE ARCH.
3. GRADING ELEVATION, EXTERIOR SLABS ETC. SEE CIVIL DRAWINGS.

2 SLAB ON GRADE EDGE CONDITION

NOT FOR CONSTRUCTION

09.AUG.21

belzberg architects
2321 MAIN STREET
SANTA MONICA, CA 90405
310.453.9611
www.belzbergarchitects.com

ARUP
Arup North America Ltd.
900 Wilshire Boulevard,
19th Floor
Los Angeles CA 90017
Tel: 310 578 4400
www.arup.com

#	DESCRIPTION	DATE

TYPICAL SLAB ON GRADE DETAILS

PROJECT NUMBER:

S622

8/10/2021 5:30:08 PM

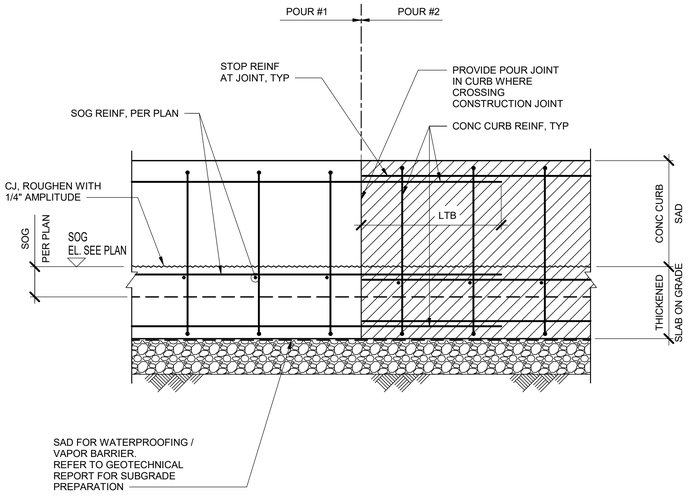

NOTES:

1. SLAB ON GRADE PER PLAN.
2. CURBS PER 3/S622.
3. CONSTRUCTION JOINT SIMILIAR TO 4/S623.

5 CONSTRUCTION JOINT AT CURB

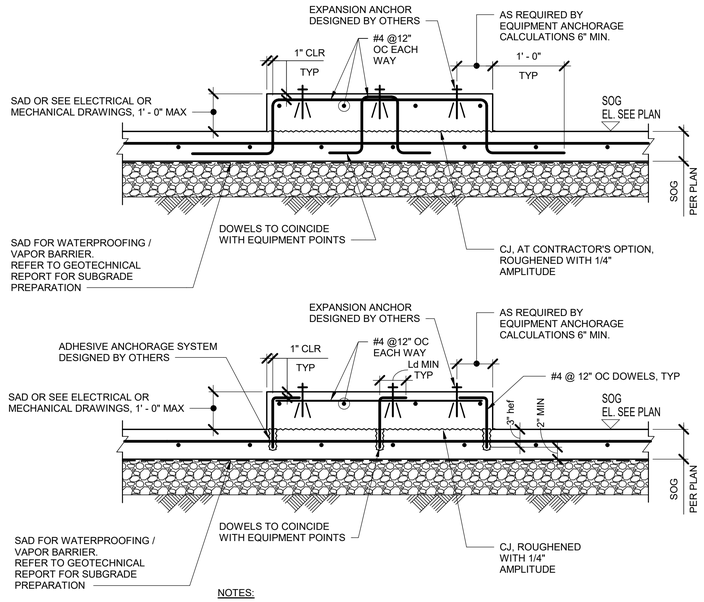

NOTES:

1. SLAB ON GRADE PER PLAN.
2. ANCHORAGE TO PAD AND DOWELS TO SLAB DESIGNED BY ANCHORAGE ENGINEER. DOWEL REINF SHOWN IS MINIMUM AND NEEDS TO BE CONFIRMED FOR ACTUAL EQUIPMENT LOADS.
3. ADHESIVE ANCHORAGE SYSTEM PER GENERAL NOTES.
4. PAD SIZE AND LOCATION SHALL TAKE INTO ACCOUNT MINIMUM REQUIREMENTS SUCH AS DISTANCES OF ANCHORAGE SOLUTION.
5. CONTRACTOR SHALL NOT DAMAGE EXISTING REINFORCEMENT IN SLAB.
6. DETAIL FOR SLAB ON GRADE WITH DOUBLE LAYER REINFORCEMENT SHALL BE SIMILAR.

3 HOUSEKEEPING PAD AND BUILT-UP SLAB ON SLAB ON GRADE

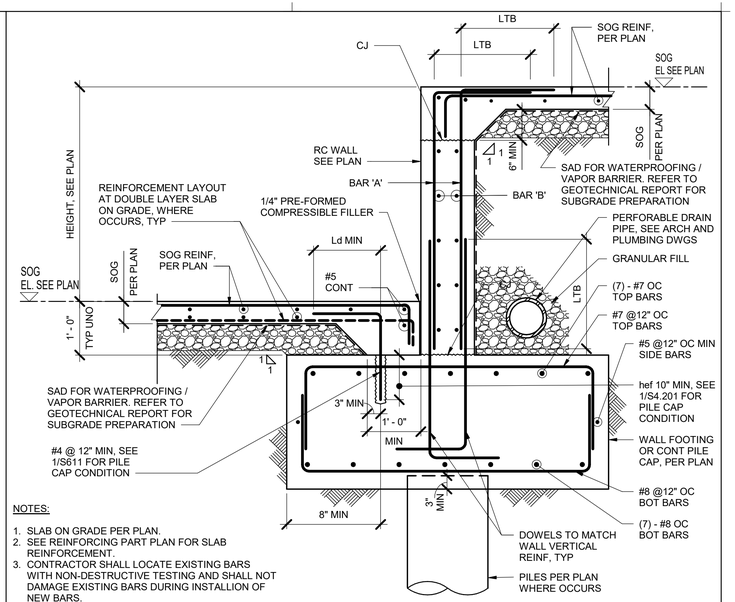

NOTES:

1. SLAB ON GRADE PER PLAN.
2. SEE REINFORCING PART PLAN FOR SLAB REINFORCEMENT.
3. CONTRACTOR SHALL LOCATE EXISTING BARS WITH NON-DESTRUCTIVE TESTING AND SHALL NOT DAMAGE EXISTING BARS DURING INSTALLION OF NEW BARS.
4. BARS EPOXIED INTO CONCRETE SHALL MAINTAIN THE MINIMUM EDGE DISTANCES PER ICC REPORT AND SHALL BE WITHIN THE REINFORCEING CAGE OF THE FOOTING OR PILE CAP, UNO.
5. POST INSTALLED REINFORCEING BAR SYSTEM PER GENERAL NOTES.
6. SOIL SIDE DRAINAGE SYSTEM TO COMPLY WITH THE APPROVED GEOTECHNICAL REPORT.
7. UNLESS NOTED OTHERWISE THIS DETAIL SHALL APPLY STEPS LARGER THAN 4 FEET.
8. SEE X/SXXX FOR FIELD TRAY RETAINING WALLS

STEP HEIGHT	WALL THICKNESS	VERTICAL REINFORCEMENT	HORIZONTAL REINFORCEMENT
		BAR A	BAR B
UP TO 6 FT	12"	#6 @12" EF OC	#5 @12" EF OC
UP TO 8 FT	12"	#6 @8" EF OC	#5 @8" EF OC
UP TO 11 FT	18"	#6 @8" EF OC	#5 @8" EF OC

1 SLAB ON GRADE STEP

SLAB THICKNESS	CONTROL JOINT SPACING
5"	12' - 0" OC MAX EACH BAY
8"	15' - 0" OC MAX EACH BAY

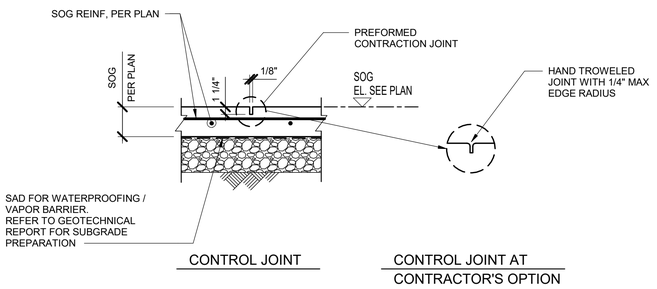

NOTES:

1. SLAB ON GRADE PER PLAN.
2. ALL SAW CUT / TROWELED JOINTS NEED TO BE DONE WITHIN 24 HOURS OF SLAB BEING POURED.
3. CONTROL JOINTS SHALL BE SPACED PER SCHEDULE. THE AREA BOUNDED BY CONTROL JOINTS OR CONSTRUCTION JOINTS SHALL NOT EXCEED 225 SQ FT WITH ASPECT RATIO OF SLAB PANELS BEING A MAXIMUM OF 1.2 TO 1.
4. DETAIL FOR SLAB ON GRADE WITH DOUBLE LAYER REINFORCEMENT SHALL BE SIMILAR.

6 SLAB ON GRADE CONTROL JOINT DETAIL

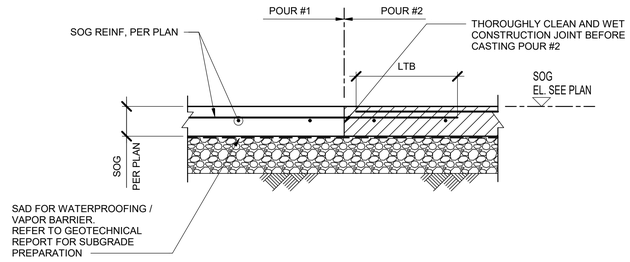

NOTES:

1. SLAB ON GRADE PER PLAN.
2. ALL CONSTRUCTION JOINTS IN SLAB ON GRADE SHALL BE PER THIS DETAIL.
3. DETAIL FOR SLAB ON GRADE WITH DOUBLE LAYER REINFORCEMENT SHALL BE SIMILAR.

4 SLAB ON GRADE CONSTRUCTION JOINTS

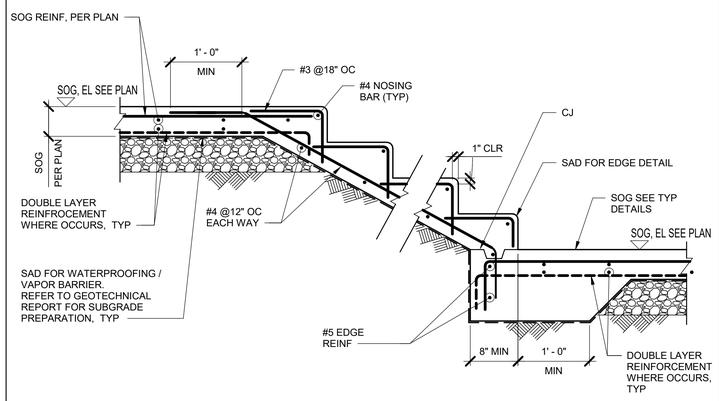

NOTES:

1. SLAB ON GRADE PER PLAN.
2. SEE ARCHITECTURAL DRAWINGS FOR STAIR GEOMETRY AND STEP DETAILS.
3. CONSTRUCTION JOINT DETAIL PER 4/S623.

2 TYPICAL STEPS ON GRADE

NOT FOR CONSTRUCTION

09.AUG.21

belzberg architects
2321 MAIN STREET
SANTA MONICA, CA 90405
310.453.9611
www.belzbergarchitects.com

ARUP
Arup North America Ltd.
900 Wilshire Boulevard,
19th Floor
Los Angeles CA 90017
Tel: 310 578 4400
www.arup.com

#	DESCRIPTION	DATE

TYPICAL SLAB ON GRADE DETAILS

PROJECT NUMBER:

S623

8/10/2021 5:30:11 PM

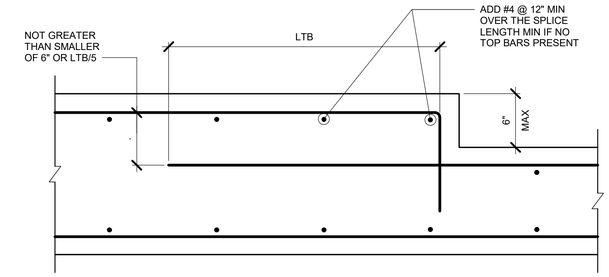

5 SLAB DEPRESSIONS/ STEPS - 6" MAX

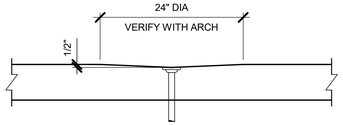

3 DEPRESSION AT FLOOR DRAIN

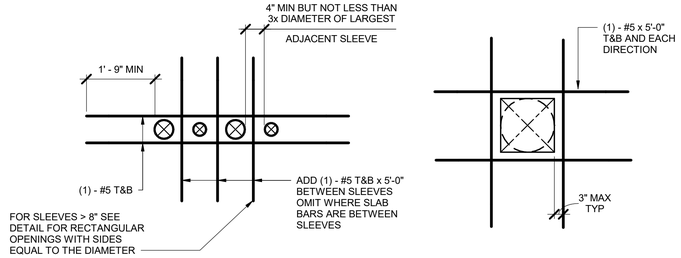

NOTES:

1. SEE CONCRETE GENERAL NOTES FOR MINIMUM COVER AND OTHER DETAILING REQUIREMENTS.

1 OPENINGS IN SLABS AND SLAB ON GRADE

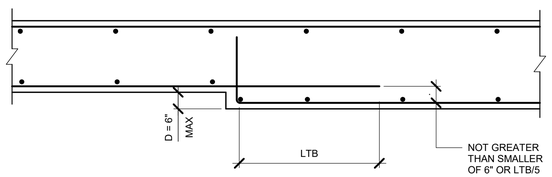

6 SLAB THICKNESS CHANGE

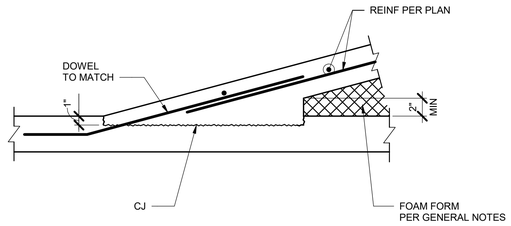

NOTE:

1. SLAB REINF NOT SHOWN.

4 RAMP TO SLAB DETAIL

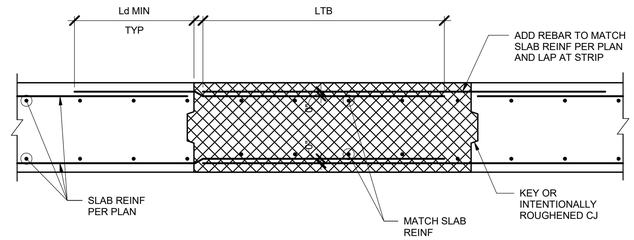

NOTES:

1. TOP SLAB REINF PERPENDICULAR TO STRIP NOT SHOWN. SPLICE ALL PERPENDICULAR REINFORCEMENT LTB AT STRIP, WHERE OCCURS.
2. POUR STRIPS ARE INTENDED TO BE THE LAST CONCRETE CAST BETWEEN ADJACENT CONCRETE WALLS TO ALLOW FOR SHRINKAGE TO OCCUR. CAST POUR STRIPS 30 DAYS AFTER ALL SLAB CONCRETE HAS BEEN CAST EITHER SIDE OF POUR STRIP.
3. JOINTS TO BE LOCATED BY CONTRACTOR. REFER TO CONCRETE SPECIFICATION FOR CONCRETE POUR AND SUBMITTAL REQUIREMENTS.

2 POUR JOINT DETAILS TYPICAL POUR

NOT FOR CONSTRUCTION

09.AUG.21

ba
belzberg architects
2321 MAIN STREET
SANTA MONICA, CA 90405
310.453.9611
www.belzbergarchitects.com

ARUP
Arup North America Ltd.
900 Wilshire Boulevard,
19th Floor
Los Angeles CA 90017
Tel: 310 578 4400
www.arup.com

#	DESCRIPTION	DATE

TYPICAL CONCRETE DETAILS

PROJECT NUMBER:

S624

8/10/2021 5:30:12 PM

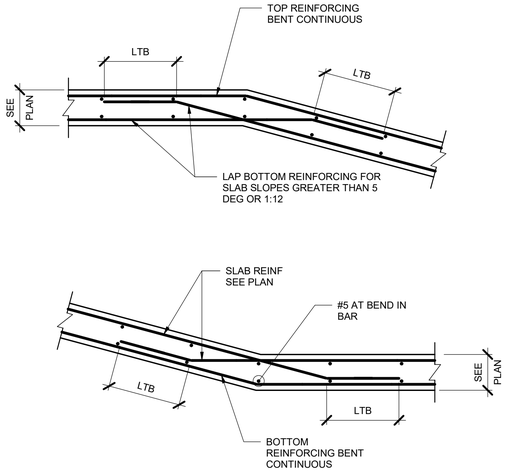

5 SLOPED SLAB DETAILS

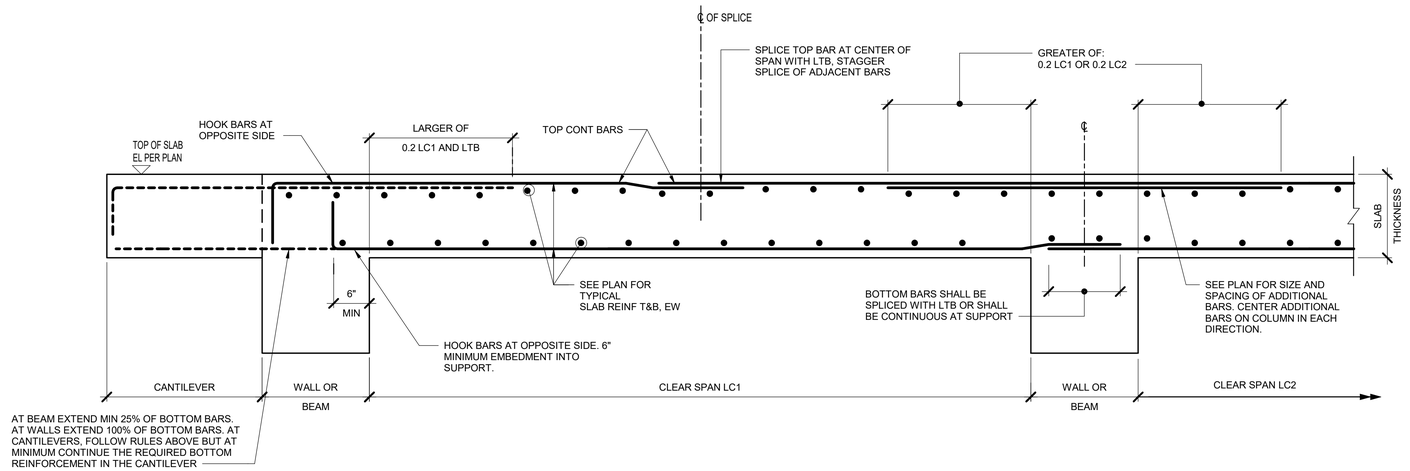

END SUPPORT

INTERIOR SUPPORT

NOTES:

1. THIS DETAIL APPLIES TO TWO-WAY SLABS ONLY.
2. LAP BOTTOM BARS AT SUPPORTS WHERE REQUIRED.
3. ADDITIONAL REINFORCING BARS SHALL ALTERNATE WITH MAIN REINFORCING BARS AND SHALL BE PLACED IN SAME LAYER WHERE REQUIRED ON PLAN.

3 TWO-WAY SLAB REINFORCEMENT

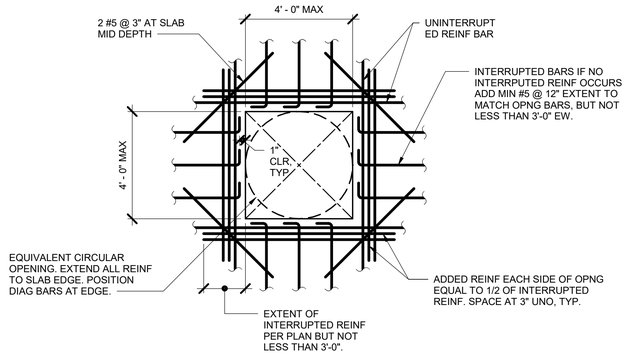

NOTES:
1. THIS DETAIL IS APPLICABLE TO TYPICAL FLAT SLAB AND SLAB ON GRADES.
2. THIS DETAIL IS NOT APPLICABLE TO PAN JIST OPENINGS.
3. MAXIMUM OPENING APPLICABLE FOR THIS DETAIL TO BE 4'-0"

4 TYPICAL > 8" TO MAX 4' - 0" SLAB AND SLOB ON GRADE OPENING DETAIL

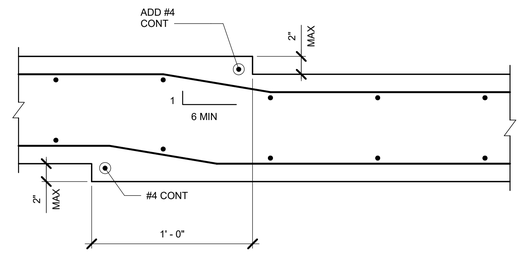

2 SLAB DEPRESSIONS/ STEPS - 2" MAX

NOT FOR CONSTRUCTION

09.AUG.21

belzberg architects
2321 MAIN STREET
SANTA MONICA, CA 90405
310.453.9611
www.belzbergarchitects.com

ARUP
Arup North America Ltd.
900 Wilshire Boulevard,
19th Floor
Los Angeles CA 90017
Tel: 310 578 4400
www.arup.com

#	DESCRIPTION	DATE

TYPICAL CONCRETE DETAILS

PROJECT NUMBER:

S625

8/10/2021 5:30:13 PM

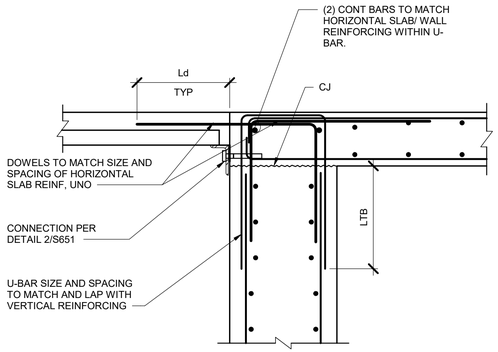

NOTES:

1. COMPOSITE DECK REINF NOT SHOWN FOR CLARITY.

5 METAL DECK TO RC WALL DETAIL

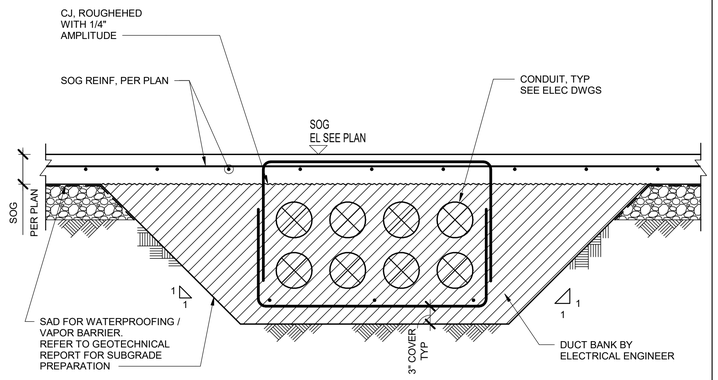

NOTES:

1. SLAB ON GRADE PER PLAN.
2. LOCATION, MIN COVER, CONCRETE STRENGTH, SPACING BETWEEN CONDUITS BY ELECTRICAL ENGINEER.
3. DETAIL FOR SLAB ON GRADE WITH DOUBLE LAYER REINFORCEMENT SHALL BE SIMILAR.

3 ELECTRICAL DUCT BANK CONNECTED TO SLAB ON GRADE

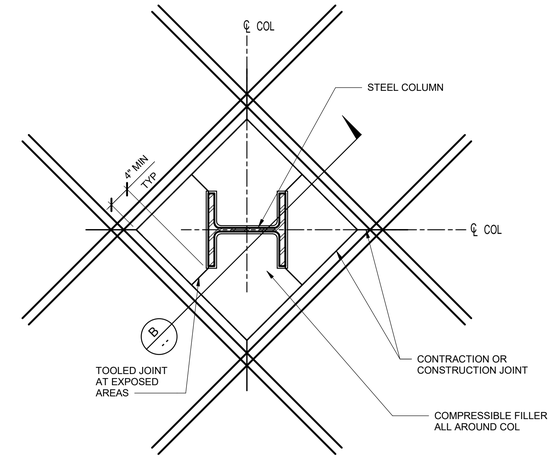

A -- PLAN

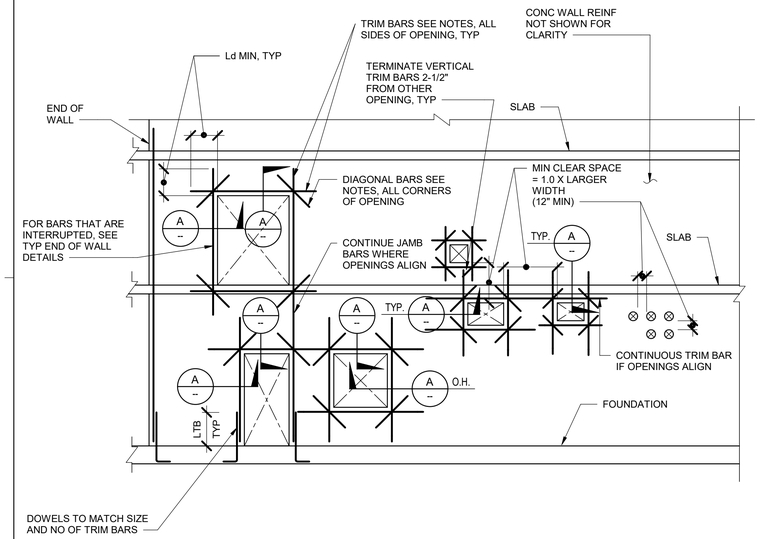

6 TYPICAL CONCRETE WALL TRIM REINFORCEMENT FOR OPENING

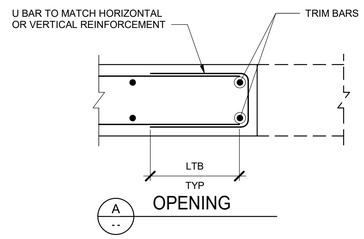

NOTES:

1. TRIM REINF SHOWN ON DETAIL IS MINIMUM. IF TRIM REINF IS SHOWN IN WALL ELEV PROVIDE REINF IN WALL ELEV IN LIEU OF THIS REINF.

2. CONTRACTOR SHALL COORDINATE OPENING SIZES AND LOCATIONS WITH MEP CONTRACTORS AND ARCHITECT. CONTRACTOR SHALL SHOW ALL OPENINGS AND TRIM REINF ON SHOP DRAWINGS.

3. APPLY DETAIL A OF AS SHOWN ABOVE AROUND OPENINGS UNLESS MORE STRINGENT BOUNDARY ZONE REINFORCEMENT OR LINK BEAM REINFORCEMENT REPLACE THE RESPECTIVE TRIM BARS.

4. TRIM REINFORCEMENT OUTSIDE OF THE DIMENSIONS BELOW ARE DETAILED IN ELEVATION. THE CONTRACTOR SHALL NOTIFY THE ENGINEER IF OPENINGS ARE NOT COVERED BY THE TRIM REINFORCEMENT RULES BELOW AND DO NOT HAVE REINFORCEMENT DETAILED IN ELEVATION.

5. TYPICAL TRIM REINFORCEMENT :

A. OPENING WIDTH EQUAL OR LESS THAN 5'-0", HEIGHT LESS THAN 7'-0".

TRIM BARS = (2) #9
DIAGONAL BARS (1) #5 X 4'-0"
FOR EACH LAYER OF WALL REINFORCING

B. OPENING WIDTH OR HEIGHT EQUAL TO OR LESS THAN 5'-0", BUT GREATER THAN 2'-0".

TRIM BARS = (2) #8
DIAGONAL BARS (1) #5 X 4'-0"
FOR EACH LAYER OF WALL REINFORCING

C. OPENING WIDTH OR HEIGHT EQUAL TO OR LESS THAN 2'-0" BUT GREATER THAN 8"

TRIM BARS = (2) #6
NO DIAGONAL BARS REQUIRED

D. OPENING WIDTH AND HEIGHT EQUAL TO OR LESS THAN 8"

NO DIAGONAL BARS REQUIRED
ROUTE TYPICAL WALL REINFORCEMENT AROUND OPENING SATISFYING MINIMUM CONCRETE COVER SO NO BARS ARE INTERRUPTED.
AT MINIMUM ONE REBAR NEEDS TO RUN BETWEEN OPENINGS.
AT CLUSTERED OPENINGS PROVIDE TRIM BARS AROUND THE CLUSTER USING THE RULES FOR THE COMBINED OPENING SIZE.

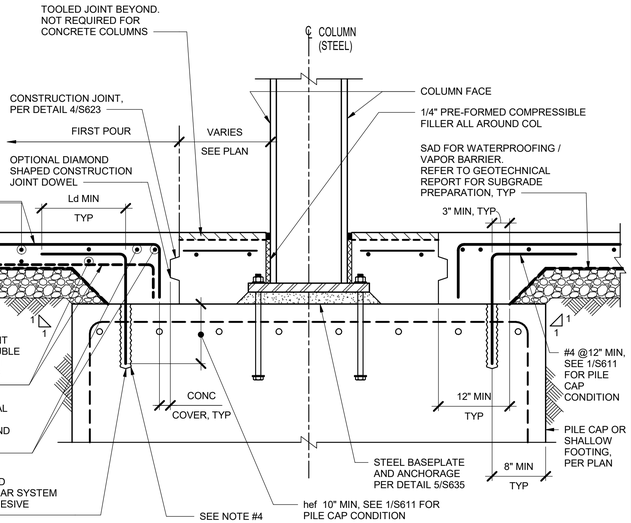

B -- SECTION

NOTES:

1. SLAB ON GRADE PER PLAN.
2. CONTRACTOR SHALL LOCATE EXISTING BARS WITH NON-DESTRUCTIVE TESTING AND SHALL NOT DAMAGE EXISTING BARS DURING INSTALLION OF NEW BARS.
3. BARS EPOXIED INTO CONCRETE SHALL MAINTAIN THE MINIMUM EDGE DISTANCES PER ICC REPORT AND SHALL BE WITHIN THE REINFORCING CAGE OF THE FOOTING OR PILE CAP, UNO.
4. POST INSTALLED REINFORCING BAR SYSTEM PER GENERAL NOTES.

2 CONSTRUCTION JOINTS AT STEEL COLUMNS SLAB ON GRADE

NOT FOR CONSTRUCTION

09.AUG.21

belzberg architects
2321 MAIN STREET
SANTA MONICA, CA 90405
310.453.9611
www.belzbergarchitects.com

ARUP
Arup North America Ltd.
900 Wilshire Boulevard,
19th Floor
Los Angeles CA 90017
Tel: 310 578 4400
www.arup.com

#	DESCRIPTION	DATE

TYPICAL CONCRETE DETAILS

PROJECT NUMBER:

S626

8/10/2021 5:30:15 PM

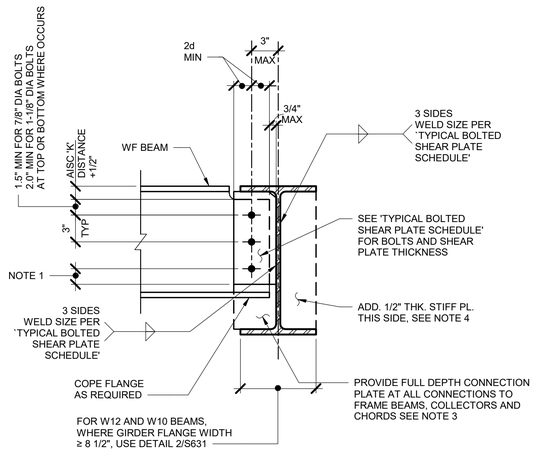

NOTES:
1. SEE 1/S630 FOR INFORMATION NOT SHOWN.
2. 'd' DENOTES DIAMETER OF BOLT.
3. FRAME BEAMS INCLUDE BRACED FRAME BEAMS. COLLECTORS AND CHORDS INCLUDE ANY WIDE FLANGE BEAM IDENTIFIED WITH CONNECTION SYMBOLS AT ENDS EXCLUDING THE FOLLOWING BEAMS:
   a. BEAMS AT CANTILEVERS AND THEIR BACKSPANS
   b. BEAMS WITH CONNECTION SYMBOL " ⊢ "
4. STIFF PL. REQUIRED WHERE FULL DEPTH CONN PLATE IS PROVIDED. EXCEPTION: WHERE BEAM OCCURS AT THE OPPOSITE SIDE OF THE GIRDER WITHIN 10" OFFSET DISTANCE OF THE BEAM CENTERLINE, ADDITIONAL STIFF PL. IS NOT REQUIRED.
5. ═══ WHERE AXIALLY RELEASED CONNECTION IS INDICATED ON PLAN, PROVIDE LONG SLOTTED HOLES IN SHEAR PLATE.

5 TYPICAL ONE-SIDED BEAM TO GIRDER CONNECTION

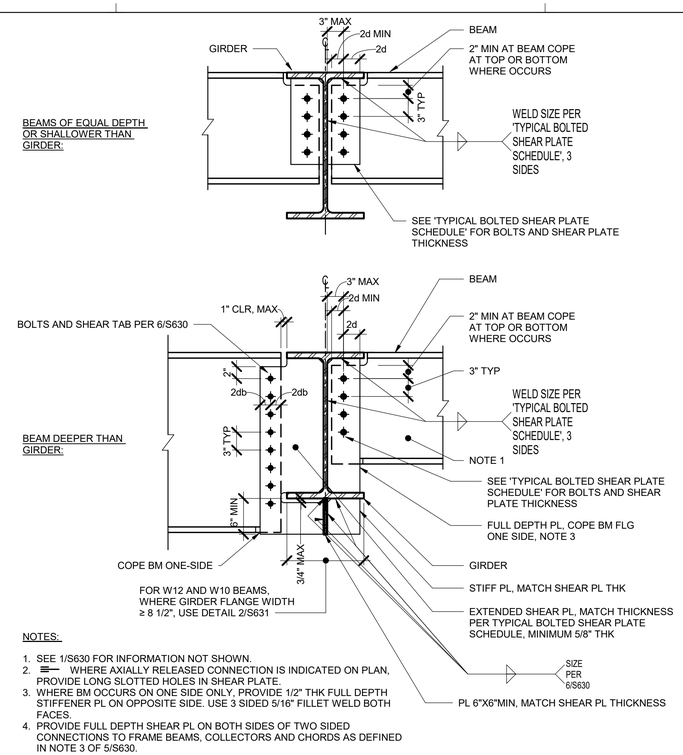

NOTES:
1. SEE 1/S630 FOR INFORMATION NOT SHOWN.
2. ═══ WHERE AXIALLY RELEASED CONNECTION IS INDICATED ON PLAN, PROVIDE LONG SLOTTED HOLES IN SHEAR PLATE.
3. WHERE BM OCCURS ON ONE SIDE ONLY, PROVIDE 1/2" THK FULL DEPTH STIFFENER PL ON OPPOSITE SIDE. USE 3 SIDED 5/16" FILLET WELD BOTH FACES.
4. PROVIDE FULL DEPTH SHEAR PL ON BOTH SIDES OF TWO SIDED CONNECTIONS TO FRAME BEAMS, COLLECTORS AND CHORDS AS DEFINED IN NOTE 3 OF 5/S630.

3 BEAM TO GIRDER CONNECTION

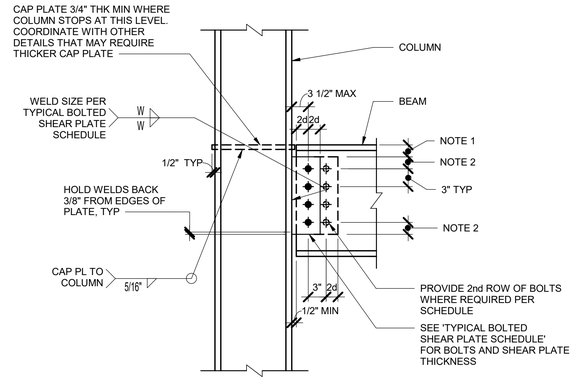

NOTES:
1. SHEAR PLATE SHALL CLEAR AISC 'k'.
2. MINIMUM EDGE DISTANCE:
   1 1/2" MINIMUM AT 7/8" DIAMETER BOLTS
   1 3/4" MINIMUM AT 1 1/8" DIAMETER BOLTS
   MINIMUM EDGE DISTANCE 2d UNLESS NOTED OTHERWISE
3. 'd' DENOTES DIAMETER OF BOLT.
4. PROVIDE AISC STANDARD HOLES IN BEAM.
5. PROVIDE AISC STANDARD HOLES IN SHEAR PLATE. AT SNUG-TIGHT AND PRE-TENSIONED CONNECTIONS, CONTRACTOR MAY USE HORIZONTALLY SHORT SLOTTED HOLES (SSL) IN SHEAR PLATE.
4. FOR BOLTS, WELDS AND PLATE THICKNESS SEE SCHEDULE 6/S630.

1 TYPICAL BEAM TO COLUMN FLANGE CONNECTION

CONNECTING BEAM SIZE	STANDARD SHEAR TAB CONNECTION				SLIP-CRITICAL CONNECTION TYPE			
	NUMBER OF BOLTS 'n'	BOLT DIAMETER AND BOLT TYPE, 'db'	SHEAR TAB PLATE THICKNESS 't'	SHEAR TAB FILLET WELD SIZE 'w'	NUMBER OF BOLTS 'n'	BOLT DIAMETER AND BOLT TYPE, 'db'	SHEAR TAB PLATE THICKNESS 't'	SHEAR TAB FILLET WELD SIZE 'w'
W10	2	7/8" DIA A325-N	3/8"	1/4"	NOT APPLICABLE			
W12	2	7/8" DIA A325-N	3/8"	1/4"	2	1-1/8" DIA A490-SC	1/2"	3/8"
W14	3	7/8" DIA A325-N	3/8"	1/4"	3	1-1/8" DIA A490-SC	1/2"	3/8"
W16	4	7/8" DIA A325-N	3/8"	1/4"	4	1-1/8" DIA A490-SC	1/2"	3/8"
W18	4	7/8" DIA A325-N	3/8"	1/4"	4	1-1/8" DIA A490-SC	1/2"	3/8"
W21	5	7/8" DIA A325-N	3/8"	1/4"	5	1-1/8" DIA A490-SC	1/2"	3/8"
W24	6	7/8" DIA A325-N	3/8"	1/4"	6	1-1/8" DIA A490-SC	1/2"	3/8"
W27	7	7/8" DIA A325-N	3/8"	1/4"	7	1-1/8" DIA A490-SC	1/2"	3/8"
W30	8	7/8" DIA A325-N	3/8"	1/4"	8	1-1/8" DIA A490-SC	5/8"	7/16"
W33	9	7/8" DIA A325-N	3/8"	1/4"	9	1-1/8" DIA A490-SC	5/8"	7/16"
W36	10	7/8" DIA A325-N	3/8"	1/4"	10	1-1/8" DIA A490-SC	5/8"	7/16"
W40	11	7/8" DIA A325-N	3/8"	1/4"	10	1-1/8" DIA A490-SC	5/8"	7/16"
W44	12	7/8" DIA A325-N	3/8"	1/4"	12	1-1/8" DIA A490-SC	5/8"	7/16"

NOTES:

1. DIMENSIONS IN INCHES UNO.
2. CONNECTION PLATES SHALL BE ASTM A572 GRADE 50.
3. STANDARD SHEAR CONNECTION TYPE APPLIES TO ALL CONNECTIONS UNLESS NOTED OTHERWISE. HIGHER-CAPACITY SHEAR TAB CONNECTION AS NOTED ON PLAN. SLIP-CRITICAL CONNECTIONS AS SHOWN IN THE TYPICAL AND SPECIAL DETAILS AS WELL AS DEFINED IN THE GENERAL NOTES.
4. REFER TO CONNECTION DETAILS ON S630 THROUGH S638.
5. SEE DETAIL 1/S631 FOR WIDE FLANGE AND CHANNEL MEMBERS UP TO 8" DEEP.
6. SEE DETAIL 2/S631 FOR W8, W10, OR W12 BEAMS FRAMING INTO GIRDER MEMBERS WITH FLANGE WIDTH EXCEEDING 8 1/2",
7. REFER TO TYPICAL AND SPECIAL DETAILS IF STANDARD SHEAR TAB CONNECTION BOLTS AND HIGHER CAPACITY SHEAR TAB CONNECTION BOLTS ARE REQUIRED TO BE FULLY PRETENSIONED.

6 SHEAR TAB CONNECTION SCHEDULE

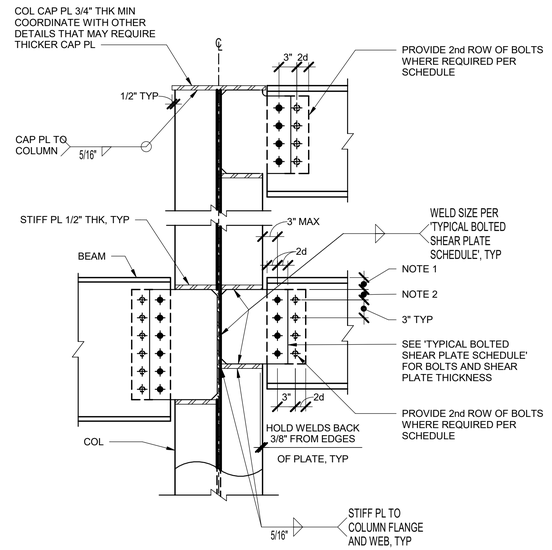

NOTES:
1. SEE 1/S630 FOR INFORMATION NOT SHOWN.

2 BEAM TO COLUMN WEB CONNECTION

NOT FOR CONSTRUCTION

09.AUG.21

belzberg architects
2321 MAIN STREET
SANTA MONICA, CA 90405
310.453.9611
www.belzbergarchitects.com

ARUP
Arup North America Ltd.
900 Wilshire Boulevard,
19th Floor
Los Angeles CA 90017
Tel: 310 578 4400
www.arup.com

#	DESCRIPTION	DATE

TYPICAL STEEL DETAILS

PROJECT NUMBER:

S630

8/10/2021 5:30:19 PM

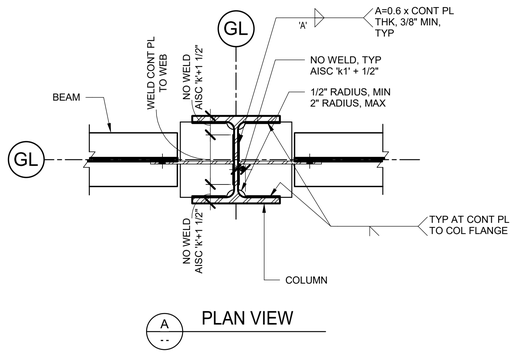

A -- PLAN VIEW

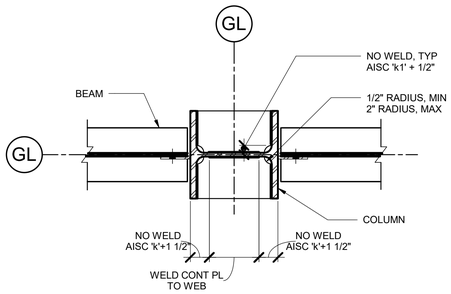

A -- PLAN VIEW

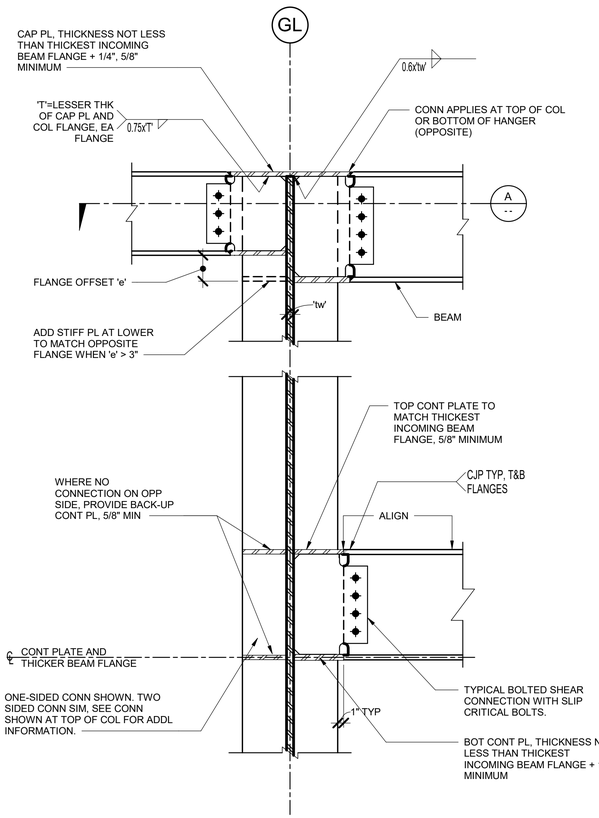

NOTES:

1. THIS DETAIL APPLIES FOR CONNECTIONS SHOWN ON PLAN AS: ▶—
2. WELD ACCESS HOLE SHALL SATISFY THE REQUIREMENTS SPECIFIED IN ANSI/AISC 360-16.
3. INCREASE PLATE THICKNESS AND WELDS AS REQUIRED BY OTHER CONNECTIONS FRAMING INTO JOINTS.
4. SHEAR TAB CONNECTION SHALL BE SLIP CRITICAL. REFER TO SCHEDULE 6/S630 AND DETAIL 1/S630.

6 NON-FRAME MOMENT CONNECTION BEAM TO COLUMN WEB

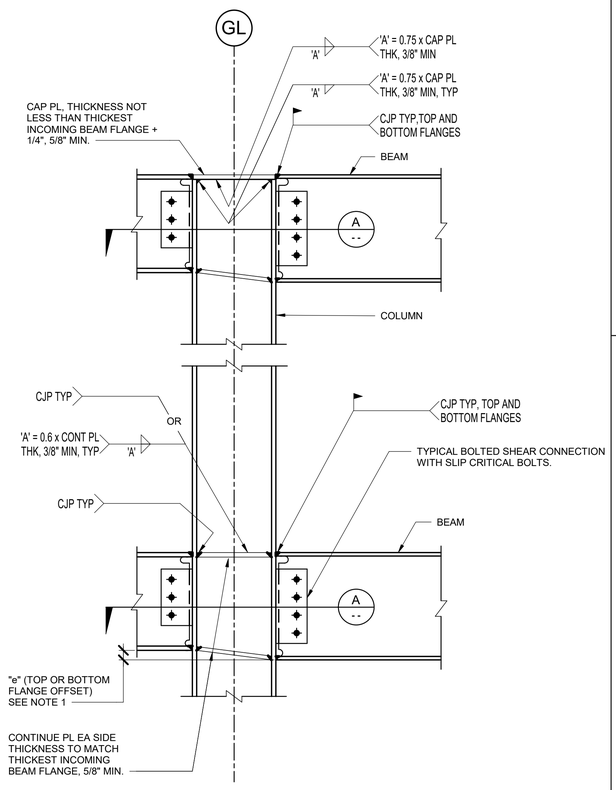

NOTES:

1. THIS DETAIL APPLIES FOR CONNECTIONS SHOWN ON PLAN AS: ▶—
3. WHERE BEAM FLANGES ARE OFFSET, SLOPE CONTINUOUS PLATES BETWEEN THE OFFSET FLANGES, UP TO A MAXIMUM OFFSET OF 3". FOR GREATER OFFSET, PROVIDE HORIZONTAL CONTINUE PLATES AT EACH FLANGE.
4. WELD ACCESS HOLE SHALL SATISFY THE REQUIREMENTS SPECIFIED IN ANSI/AISC 360-16.
5. INCREASE PLATE THICKNESS AND WELDS AS REQUIRED BY OTHER CONNECTIONS FRAMING INTO JOINTS.
6. SHEAR TAB CONNECTION SHALL BE SLIP CRITICAL. REFER TO SCHEDULE 6/S630 AND DETAIL 1/S630.

4 NON-FRAME MOMENT CONNECTION BEAM TO COLUMN FLANGE

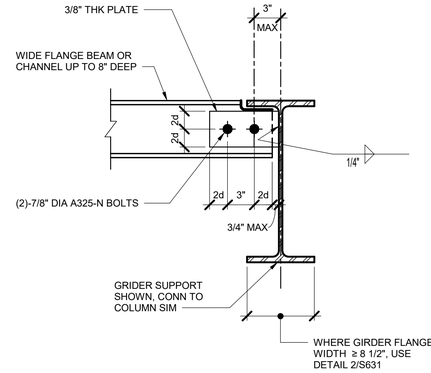

NOTES:

1. SEE THE TYPICAL BEAM CONNECTION DETAILS FOR CONNECTIONS TO DEEPER BEAMS.
2. SEE 1/S630 FOR INFORMATION NOT SHOWN.

1 SHALLOW BEAM CONNECTION

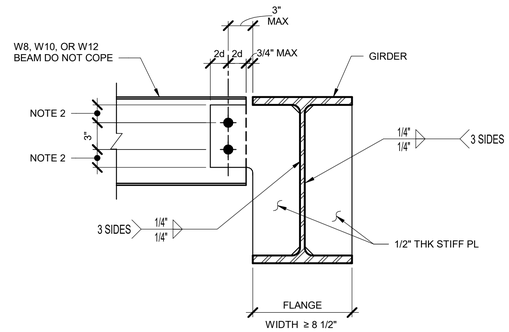

NOTES:

1. VERTICAL BOLT ARRANGEMENT SHOWN FOR W10 AND W12 BEAM. DETAIL FOR W8 BEAMS IS SIMILAR EXCEPT WITH HORIZONTAL BOLT ARRANGEMENT
2. SEE 1/S630 FOR INFORMATION NOT SHOWN.

2 W8, W10, W12 BEAM CONNECTION TO GIRDER WITH FLANGE WIDTH ≥ 8 1/2"

NOT FOR CONSTRUCTION

09.AUG.21

belzberg architects
2321 MAIN STREET
SANTA MONICA, CA 90405
310.453.9611
www.belzbergarchitects.com

ARUP
Arup North America Ltd.
900 Wilshire Boulevard,
19th Floor
Los Angeles CA 90017
Tel: 310 578 4400
www.arup.com

#	DESCRIPTION	DATE

TYPICAL STEEL DETAILS

PROJECT NUMBER:

S631

8/10/2021 5:32:22 PM

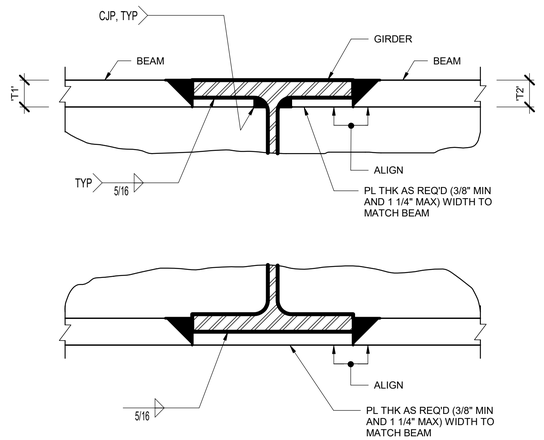

NOTES:

1. USE DETAIL IF BEAM FLANGE IS THICKER THAN GIRDER FLANGE OR IF BEAM IS DEEPER THAN GIRDER SO THAT BOTTOM FLANGES DO NOT ALIGN.

5 FLANGE ALIGNMENT PLATE

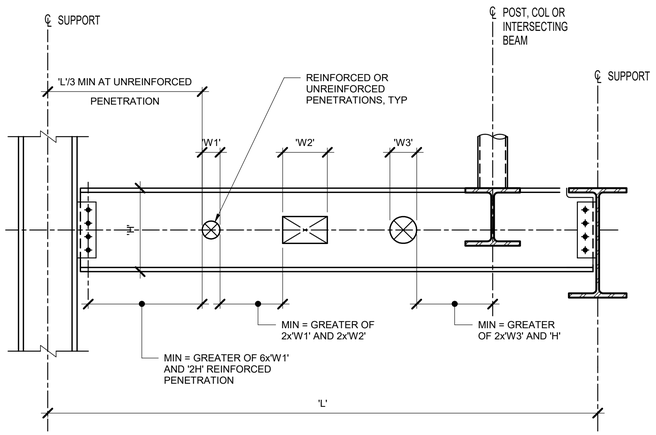

6 STEEL BEAM PENETRATION LAYOUT DETAIL

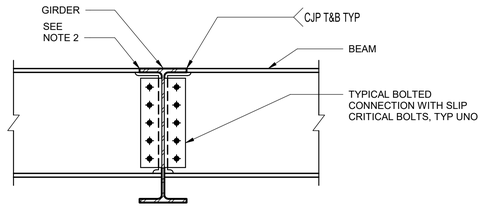

GIRDER DEEPER THAN BEAM

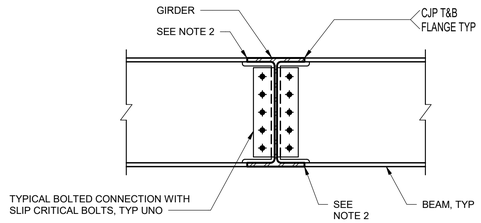

GIRDER & BEAM SAME DEPTH

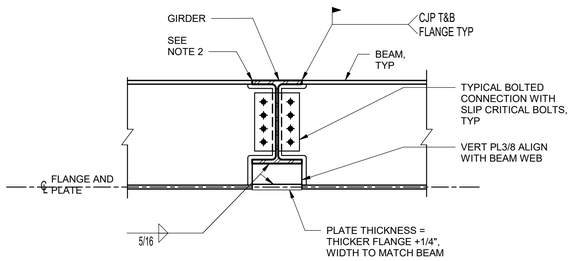

BEAM DEEPER THAN GIRDER

NOTES:

1. ▶—— THIS DETAIL APPLIES FOR CONNECTIONS SHOWN ON PLANS AS:
2. SEE THE 'FLANGE ALIGNMENT PLATE DETAIL' IF BEAM FLANGE IS THICKER THAN GIRDER FLANGE OR IF BEAM IS DEEPER THAN GIRDER SO THAT BOTTOM FLANGES DO NOT ALIGN.

4 MOMENT CONNECTION BEAM TO GIRDER

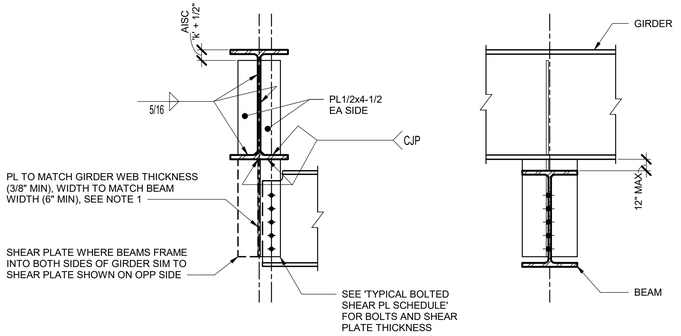

ELEVATION SECTION

NOTES:

1. BEAMS MAY OCCUR ON ONE SIDE OR BOTH SIDES OF GIRDER. WHERE BEAMS OCCUR ON BOTH SIDES, SIZE PLATE BY SIZE OF LARGER BEAM.

1 BEAM BELOW GIRDER CONNECTION

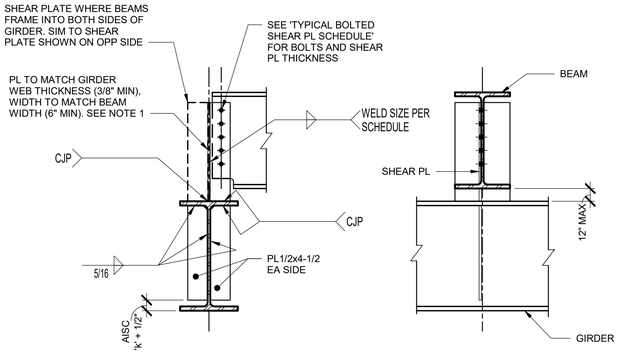

ELEVATION SECTION

NOTES:

1. BEAMS MAY OCCUR ON ONE SIDE OR BOTH SIDES OF GIRDER. WHERE BEAMS OCCUR BOTH SIDES, SIZE PLATE BY SIZE OF LARGER BEAM.

2 BEAM ABOVE GIRDER CONNECTION

NOT FOR CONSTRUCTION

09.AUG.21

ba
belzberg architects
2321 MAIN STREET
SANTA MONICA, CA 90405
310.453.9611
www.belzbergarchitects.com

ARUP
Arup North America Ltd.
900 Wilshire Boulevard,
19th Floor
Los Angeles CA 90017
Tel: 310 578 4400
www.arup.com

#	DESCRIPTION	DATE

TYPICAL STEEL DETAILS

PROJECT NUMBER:

S632

8/10/2021 5:30:25 PM

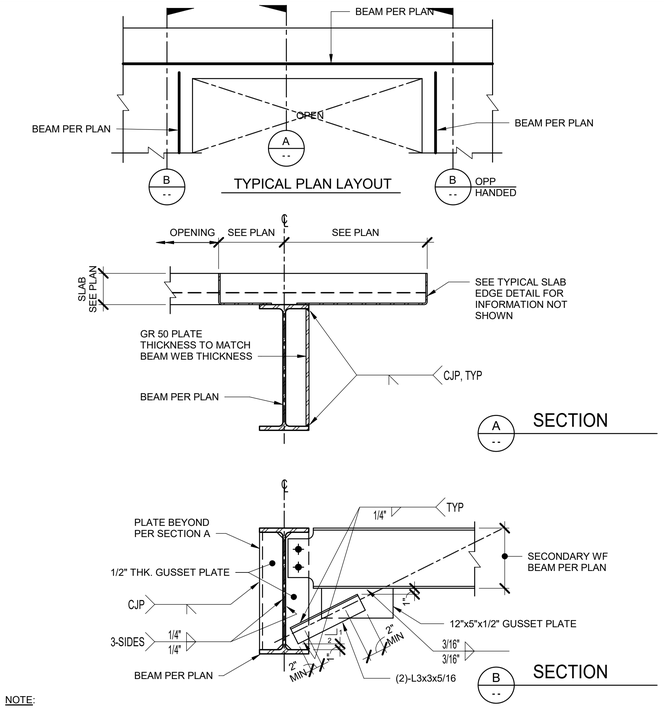

NOTE:

DECK NOT SHOWN FOR CLARITY.

5 TYPICAL WF BEAM BETWEEN SLAB EDGE AND OPENING

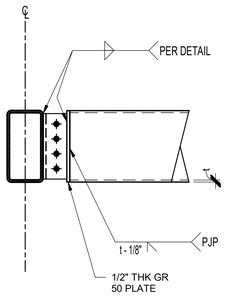

NOTES:

1. SEE STANDARD SHEAR TAB CONNECTION 6/ S630.
2. HSS DEPTH CORRESPONDS TO BEAM SIZE IN CONNECTION TABLE.

6 HSS TO HSS CONNECTION

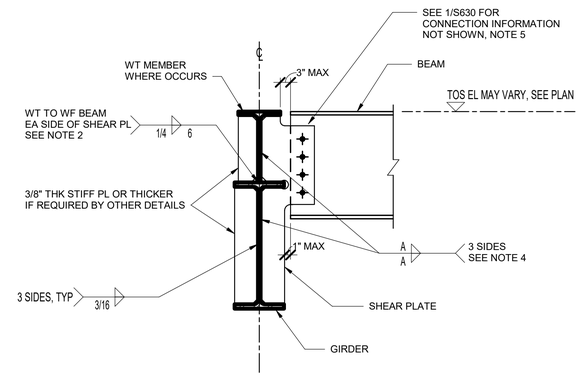

NOTES:

1. METAL DECK AND SLAB NOT SHOWN FOR CLARITY.
2. REFER TO DETAIL X/SXXX FOR WELDING OF WT TO WF BEAM WHERE SHEAR PL DOES NOT OCCUR.
3. WHERE WT OCCURS BELOW WF BEAM, CONNECTION IS SIMILAR.
4. SEE 6/S630 FOR SHEAR PLATE, BOLT AND WELD INFORMATION.
5. SEE 4/S637 FOR PLATE, WELD, AND BOLT INFORMATION WHERE THIS CONNECTION IS NOTED ON PLAN AS:

DOUBLE BOLT ROW

TRIPLE BOLT ROW

3 TYPICAL BEAM CONNECTION TO GIRDER WITH WT

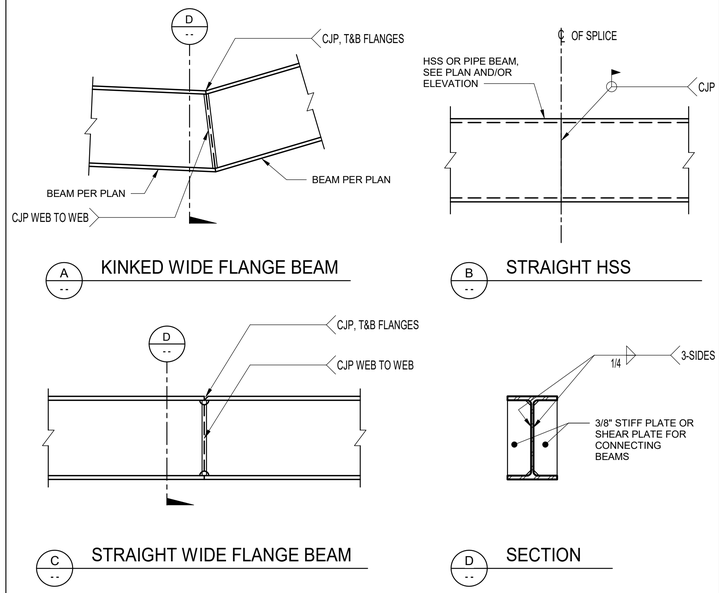

4 TYPICAL BEAM SPLICE

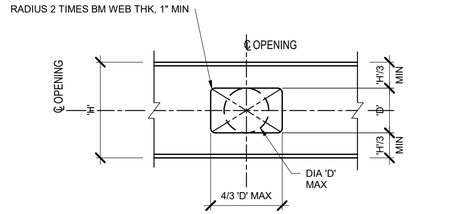

TYPE A - UNREINFORCED WEB

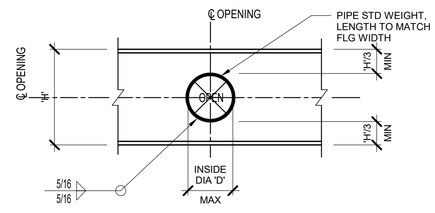

TYPE B - WEB REINFORCED (CIRCULAR ONLY)

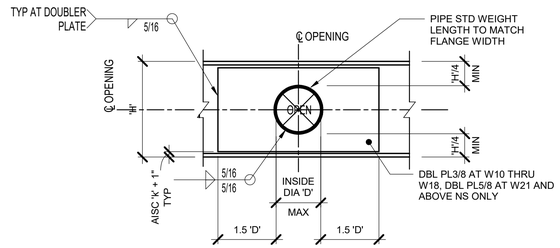

TYPE C - WEB REINFORCED WITH DOUBLER PLATE AND PIPE (CIRCULAR ONLY)

TABLE OF UNSCHEDULED PENETRATIONS		
'D' MAX		
TYPE A	TYPE B	TYPE C
'H'/5	'H'/3	'H'/2

NOTES:

1. NO PENETRATIONS SHALL BE PLACED IN BEAMS IN BRACED OR MOMENT FRAMES, OR TRUSS MEMBERS PER THIS DETAIL.
2. CONTRACTOR SHALL COORDINATE PENETRATION SIZES WITH FIREPROOFING REQUIREMENTS.
3. REFER TO DETAIL 6/S632 FOR TYPICAL STEEL BEAM PENETRATION LAYOUT.
4. NOT APPLICABLE FOR PLATE GIRDER WEB PENETRATIONS.
5. CONTRACTOR SHALL SUBMIT ALL PENETRATION LOCATIONS AND SIZES FOR REVIEW AND APPROVAL BY SEOR AND OSHPD.
6. WHERE PENETRATION DIMENSIONS SPECIFICALLY REFERENCED ON 1/S633 CONFLICT WITH TYPICAL DETAILS, THE DIMENSIONS IN 1/S633 SHALL GOVERN.

1 TYPICAL UNSCHEDULED BEAM WEB PENETRATION

NOT FOR CONSTRUCTION

09.AUG.21

belzberg architects
2321 MAIN STREET
SANTA MONICA, CA 90405
310.453.9611
www.belzbergarchitects.com

ARUP
Arup North America Ltd.
900 Wilshire Boulevard,
19th Floor
Los Angeles CA 90017
Tel: 310 578 4400
www.arup.com

#	DESCRIPTION	DATE

TYPICAL STEEL DETAILS

PROJECT NUMBER:

S633

8/10/2021 5:30:28 PM

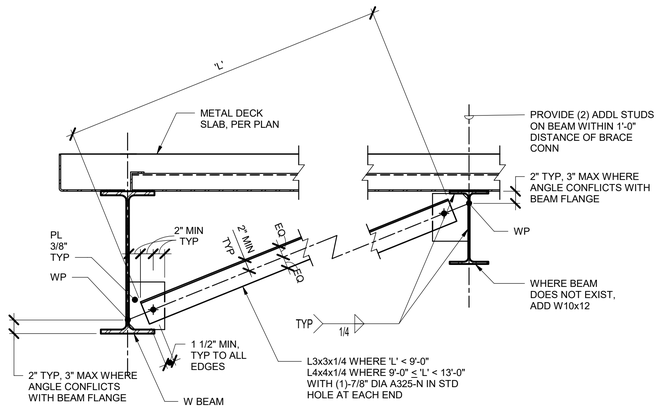

NOTE:
1. APPLY AS SHOWN IN PLAN.

5 BOTTOM FLANGE BRACE TO PARALLEL WIDE FLANGE BEAM

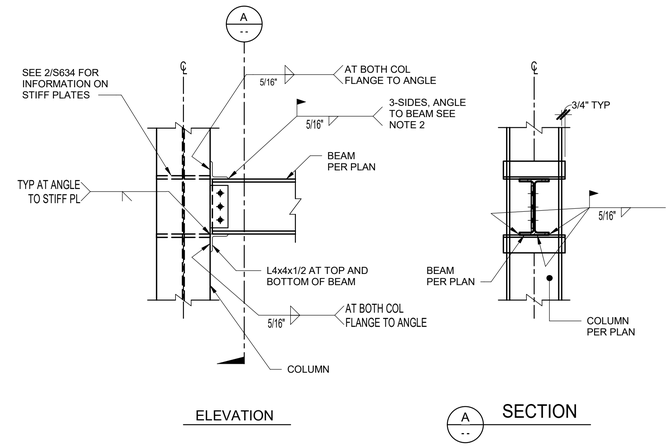

NOTES:

1. SEE 'TYPICAL BEAM TO COLUMN WEB CONNECTION' FOR INFORMATION NOT SHOWN.
2. WHERE ANGLE IS WIDER THAN BEAM FLANGE, HOLD BACK WELDS 1/2" EACH END TO AVOID GOUGING.

3 TORSION CONNECTION WF BEAM TO COLUMN WEB

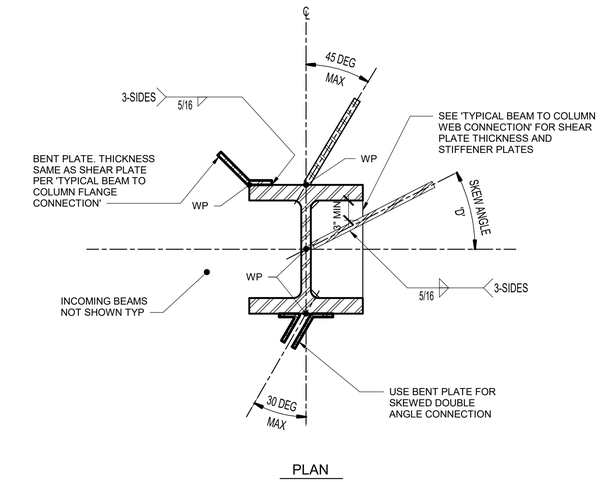

NOTES:

1. SEE PLAN FOR SKEW ANGLES.

1 TYPICAL SKEWED BEAM TO COLUMN CONNECTION

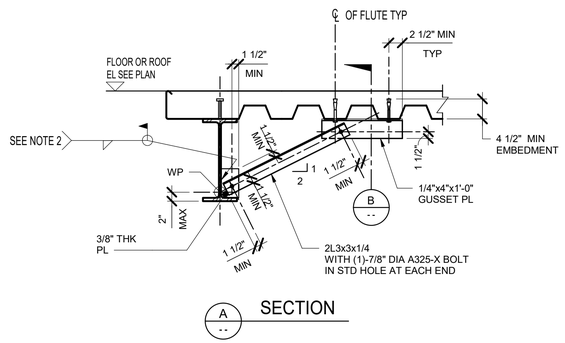

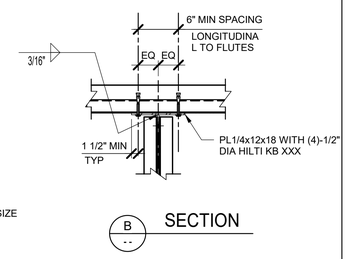

NOTES:

1. DECK PARALLEL TO BEAM CONNECTION IS SHOWN HERE. WHERE DECK IS PERPENDICULAR, THE CONNECTION SHALL BE SIMILAR.
2. THE LARGER OF 1/4" FILLET WELD OR AWS MIN REQUIRED WELD SIZE SHALL BE USED.
3. CONTRACTOR SHALL ADJUST 1/4" PLATE AND GUSSET PLATE SIZE/LOCATION TO FIT SPECIFIC DECK CONDITIONS.
4. APPLY AS SHOWN IN PLAN.

6 BOTTOM FLANGE BRACE DETAIL TO DECK

SKEW ANGLE 'D' (DEGREE)	'b'		
	'T' < 3/8"	3/8" < 'T' < 1/2"	1/2" < 'T' < 5/8"
0 TO 10	0	0	0
10 TO 17	1/8"	3/16"	3/16"
17 TO 22	3/16"	1/4"	NOT APPLICABLE
22 TO 30	1/4"	NOT APPLICABLE	NOT APPLICABLE

'T' = SHEAR PLATE THICKNESS

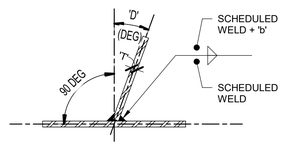

SQUARE PLATE EDGE ('D' = 0 TO 30)

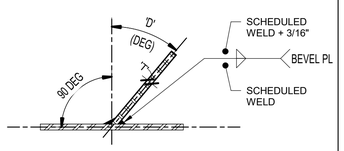

BEVELED PLATE EDGE ('D' = 17 TO 45)

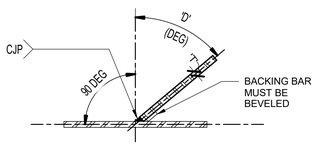

FULL PENETRATION ('D' > 45)

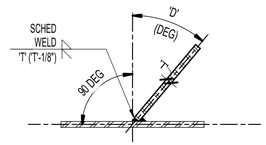

ALTERNATE SQUARE PLATE EDGE ('D' = 22 TO 45)

NOTES:

1. SEE TYPICAL BOLTED SHEAR TAB SCHEDULE ON 6/S630 FOR SCHEDULED WELD AND SHEAR PLATE THICKNESS.

4 TYPICAL SKEWED SHEAR PLATE

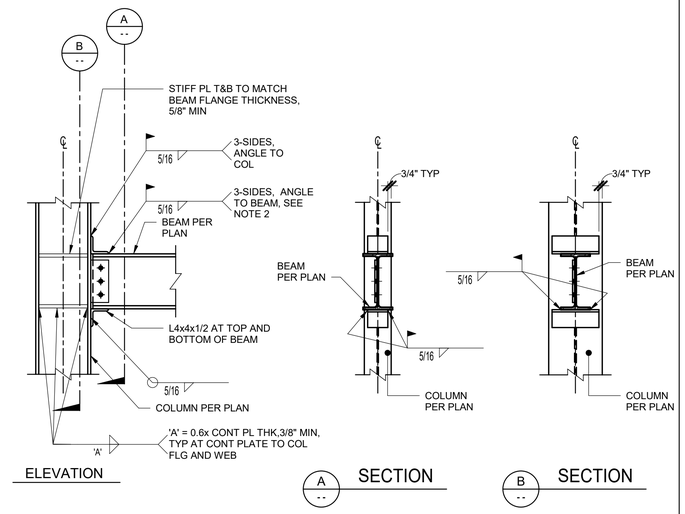

NOTES:

1. SEE 'TYPICAL BEAM TO COLUMN FLANGE CONNECTION' FOR INFORMATION NOT SHOWN.
2. WHERE ANGLE IS WIDER THAN BEAM FLANGE, HOLD BACK WELDS 1/2" EACH END TO AVOID GOUGING.

2 TORSION CONNECTION WF BEAM TO COLUMN FLANGE

NOT FOR CONSTRUCTION

09.AUG.21

belzberg architects
2321 MAIN STREET
SANTA MONICA, CA 90405
310.453.9611
www.belzbergarchitects.com

ARUP
Arup North America Ltd.
900 Wilshire Boulevard,
19th Floor
Los Angeles CA 90017
Tel: 310 578 4400
www.arup.com

#	DESCRIPTION	DATE

TYPICAL STEEL DETAILS

PROJECT NUMBER:

S634

8/10/2021 5:30:32 PM

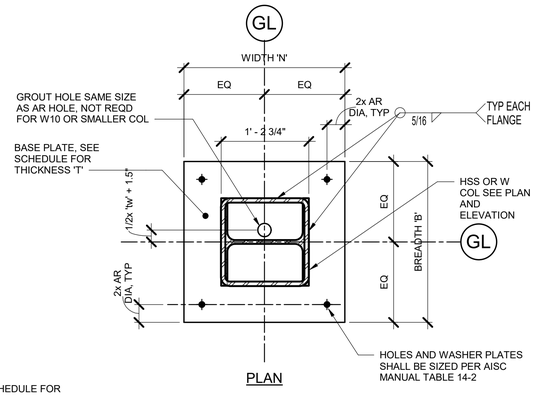

PLAN

NOTES:

1. REFER TO BASE PLATE SCHEDULE FOR BASE PLATE DIMENSIONS.

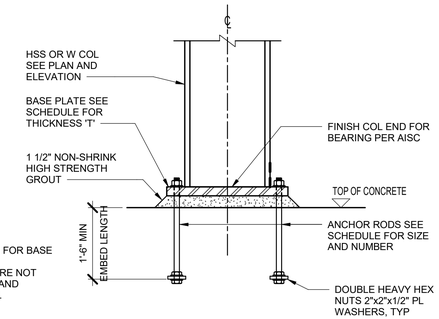

NOTES:

1. REFER TO BASE PLATE SCHEDULE FOR BASE PLATE DIMENSIONS.
2. BASEMENT SLAB AND PILE CAPS ARE NOT SHOWN. REFER TO PLAN SHEETS AND TYPICAL DETAILS FOR ADDITIONAL INFORMATION.

5 TYPICAL BASE PLATE DETAIL TYPE 1

STEEL COLUMN BASE PLATE SCHEDULE								
BASE PLATE TAG	DETAIL TYPE	PLATE			ANCHORS			NOTES
		WIDTH 'N'	BREADTH 'B'	THICKNESS 'T'	DIAMETER	NUMBER OF RODS	EMBEDMENT DEPTH	
		(IN)	(IN)	(IN)	(IN)		(IN)	
BP-1	5/S635	20	20	1.25	1	4	18	
BP-1X	X/SXXX	20	20	1.25	1	4	18	
BP-2	X/SXXX	20	20	1.75	1	4	18	
BP-3	X/SXXX	20	20	2.25	1	4	18	
BP-4	X/SXXX	24	24	3	1	4	18	
BP-5	X/SXXX	32	32	5.25	1	4	18	
BP-6	X/SXXX	14	14	1.25	0.5	4	18	
BP-7	X/SXXX	15	15	1	1	4	18	

NOTE:

1. BASE PLATE TAGS PER PLAN.

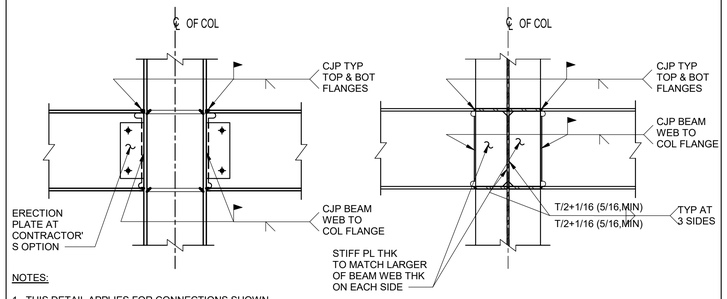

NOTES:

1. THIS DETAIL APPLIES FOR CONNECTIONS SHOWN ON PLAN AS:
2. FOR INFORMATION NOT SHOWN, SEE 4 / S631

A -- DETAIL

NOTES:

1. THIS DETAIL APPLIES FOR CONNECTIONS SHOWN ON PLAN AS:
2. FOR INFORMATION NOT SHOWN, SEE 6 / S631

B -- DETAIL

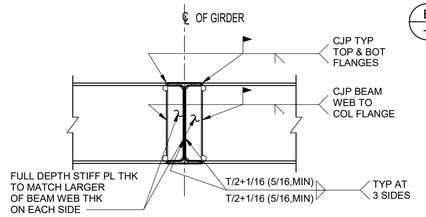

C -- DETAIL

NOTES:

1. THIS DETAIL APPLIES FOR CONNECTIONS SHOWN ON PLAN AS:
2. SEE 5 / S632 IF BEAM FLANGE IS THICKER THAN GIRDER FLANGE.

1 TYPICAL MOMENT CONNECTION WITH WELDED WEB AT COLLECTORS

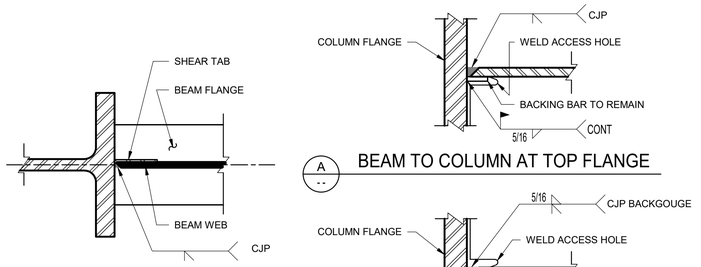

D -- BEAM WEB TO COLUMN FLANGE

A -- BEAM TO COLUMN AT TOP FLANGE

B -- BEAM TO COLUMN AT BOTTOM FLANGE

NOTES:

1. DEMAND CRITICAL WELDS (DCW) ARE DEFINED IN THE REFERRING DETAILS.

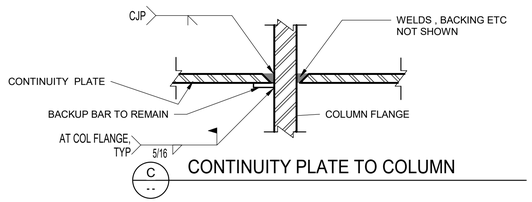

C -- CONTINUITY PLATE TO COLUMN

6 SFRS WELD BACKING DETAILS AT BEAM TO COLUMN JOINTS

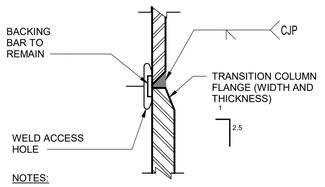

NOTES:

REFER TO AWS D1.8/D1.8M CLAUSE 4.2 FOR ALL TAPERED TRANSITION CONDITIONS AND REQUIREMENTS.

A -- COLUMN SPLICE

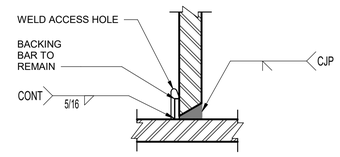

B -- COLUMN TO BASE PLATE

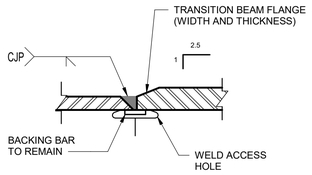

C -- BEAM FLANGE

NOTES:

1. DEMAND CRITICAL WELDS (DCW) ARE DEFINED IN THE REFERRING DETAILS.

4 SFRS WELD BACKING DETAILS AT COLUMN SPLICES AND COLUMN BASE

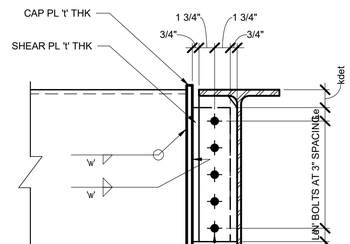

NOTES:

1. USE PLATE THICKNESSES, BOLTS, AND WELDS PER TYPICAL SHEAR TAB SCHEDULE 6/S630.
2. EDGE DISTANCE 'Le' EQUALS 1-1/2" FOR 7/8" DIAMETER BOLTS AND 2" FOR 1-1/8" DIAMETER BOLTS.
3. USE NUMBER OF BOLTS 'N' EQUAL TO THE CLOSEST WF SECTION DEPTH TO THE HSS DEPTH + 2".
4. REFER TO TYPICAL SHEAR TAB DETAILS ON S630 FOR DIFFERENT CONNECTION CONFIGURATIONS.

2 TYPICAL HSS SHEAR TAB DETAIL

NOT FOR CONSTRUCTION

09.AUG.21

ba
belzberg architects
2321 MAIN STREET
SANTA MONICA, CA 90405
310.453.9611
www.belzbergarchitects.com

ARUP
Arup North America Ltd.
900 Wilshire Boulevard,
19th Floor
Los Angeles CA 90017
Tel: 310 578 4400
www.arup.com

#	DESCRIPTION	DATE

TYPICAL STEEL DETAILS

PROJECT NUMBER:

S635

8/10/2021 5:30:36 PM

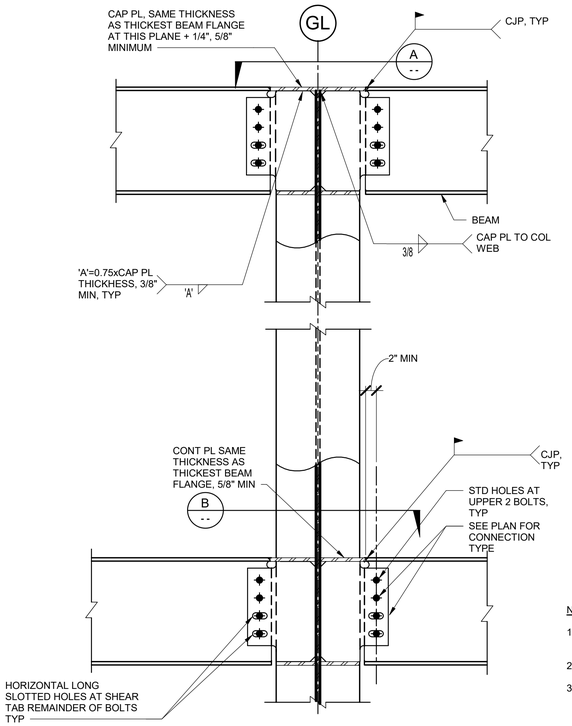

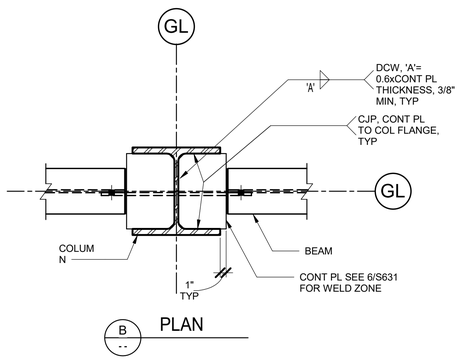

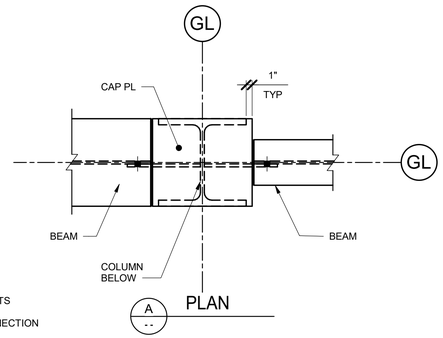

NOTES:

1. FOR CONNECTION SHOWN ON PLAN AS:
2. WELD ACCESS HOLE SHALL SATISFY THE REQUIREMENTS SPECIFIED IN ANSI/AISC 360-16.
3. BOLTS SHALL BE PER THE STANDARD TPE SHEAR CONNECTION IN SCHEDULE 6/S630 BUT FULLY PRETENSIONED.

5 WELDED TOP FLANGE DRAG STRUT CONNECTION TO COLUMN WEB

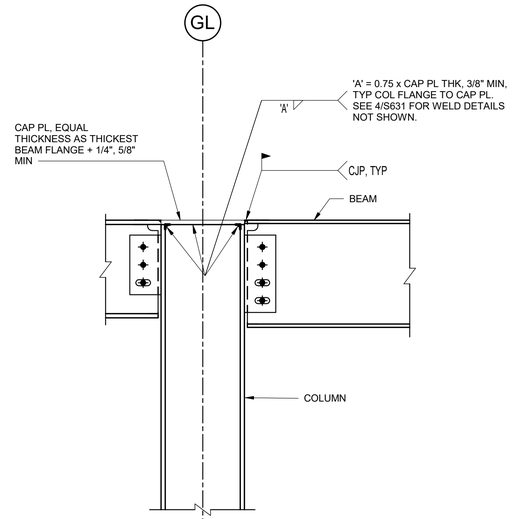

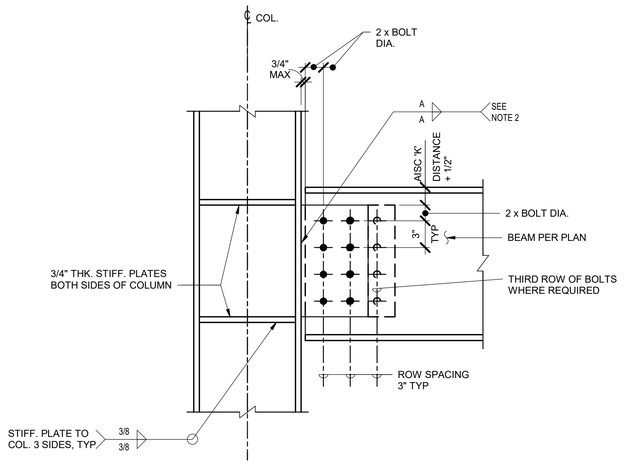

NOTES:

1. THIS DETAIL APPLIES FOR CONNECTIONS SHOWN ON PLAN AS:
2. SEE DRAG STRUT CONNECTION SCHEDULE 4/S637 FOR WELD SIZE, PLATE THICKNESS, BOLT ROW SPAING AND NUMBER OF BOLTS.

6 BOLTED DRAG STRUT CONNECTION - BEAM TO COLUMN FLANGE

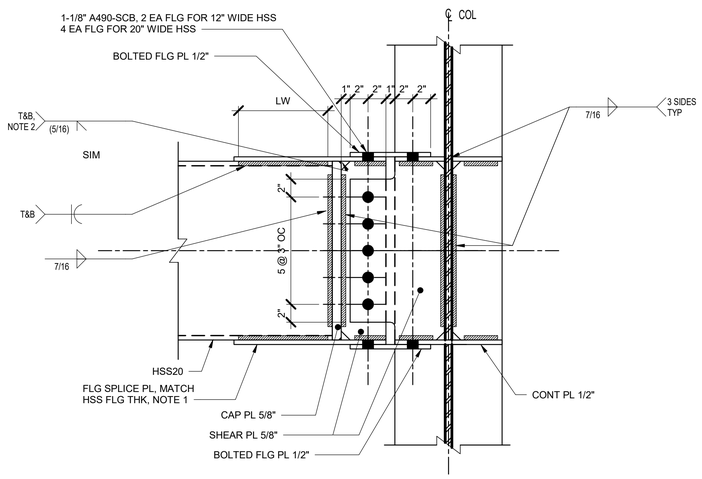

NOTES:

1. IF HSS IS A BUILT UP SHAPE, MAY CONTINUE FLANGE PLATES IN LIEU OF ADDING WELDED COVER PLATES.
2. IT IS PERMISSIBLE TO DETAIL THE END PLATE DEPTH TO ACCOMODATE ANTICIPATED HSS MILL TOLERANCES. WHERE THE PJP GROOVE WELD ROOT OPENING EXCEEDS THAT PERMISSIBLE BY AWS D1.1 SECTION 5.21.2 DUE TO HSS MILL TOLERANCES AND THE AS-DETAILED END PLATE DEPTH, IT IS PERMISSIBLE TO CORRECT THE ROOT OPENING PER AWS D1.1 SECTION 5.21.4.2 PRIOR TO JOINING THE PARTS.
3. FILLER PLATES ARE PERMITTED BETWEEN PLIES. FILLER PLATES SHALL HAVE CLASS B SURFACE PREPARATION ON BOTH SIDES. THERE IS NO LIMIT ON THE QUANTITY OR THICKNESS OF FILLER PLATES PER AISC 360 SECTION J5.2(D).

4 TYP HSS BEAM CONNECTION

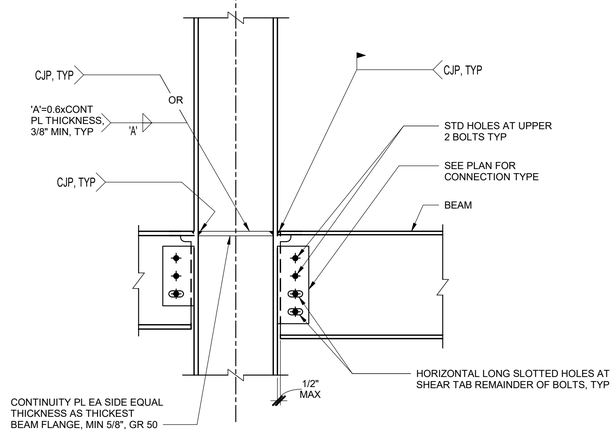

NOTES:

1. FOR CONNECTION SHOWN ON PLAN AS:
2. WELD ACCESS HOLE SHALL SATISFY THE REQUIREMENTS SPECIFIED IN ANSI/AISC 360-16.
3. BOLTS SHALL BE PER THE STANDARD TPE SHEAR CONNECTION IN SCHEDULE 6/ S630 BUT FULLY PRETENSIONED.

2 WELDED TOP FLANGE DRAG STRUT CONNECTION TO COLUMN FLANGE

NOT FOR CONSTRUCTION

09.AUG.21

belzberg architects
2321 MAIN STREET
SANTA MONICA, CA 90405
310.453.9611
www.belzbergarchitects.com

ARUP
Arup North America Ltd.
900 Wilshire Boulevard,
19th Floor
Los Angeles CA 90017
Tel: 310 578 4400
www.arup.com

#	DESCRIPTION	DATE

TYPICAL STEEL DETAILS

PROJECT NUMBER:

S636

8/10/2021 5:30:39 PM

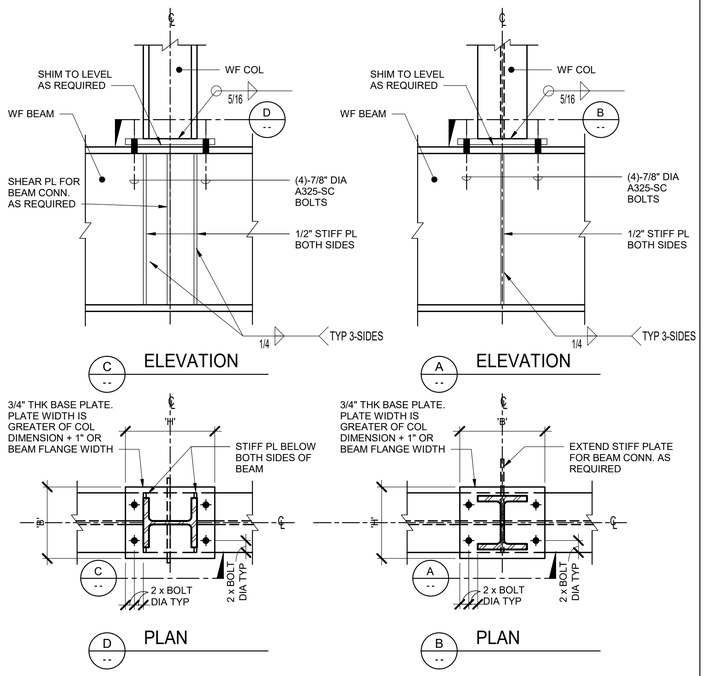

NOTES:

1. USE THIS SAME DETAIL WHERE WIDE FLANGE COLUMN FRAMES INTO THE UNDERSIDE OF WIDE FLANGE BEAM. SHIM AS REQUIRED.

5 WF COLUMN TRANSFER TO BEAM CONNECTION

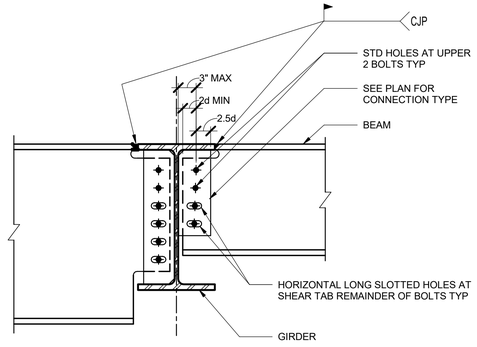

NOTES:

1. FOR CONNECTION SHOWN ON PLAN AS:
2. SEE 3/S633 IF GIRDER FLANGE THICKNESS IS LESS THAN BEAM FLANGE THICKNESS.
3. 'd' DENOTES DIAMETER OF BOLT.
4. BOLTS SHALL BE PER THE STANDARD TPE SHEAR CONNECTION IN SCHEDULE 6/S630 BUT FULLY PRETENSIONED.

3 TYPICAL WELDED TOP FLANGE DRAG STRUT CONNECTION - BEAM TO GIRDER

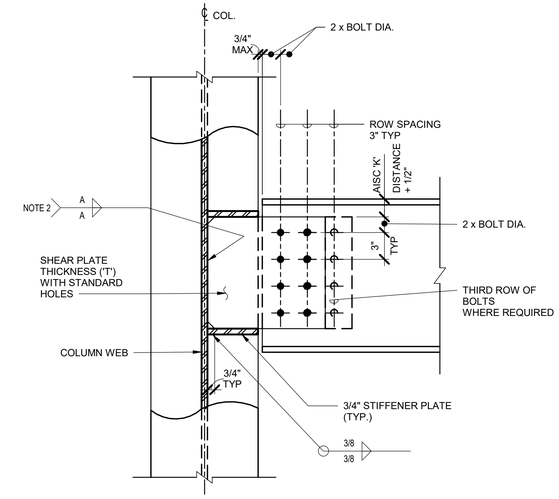

NOTES:

1. THIS DETAIL APPLIES FOR CONNECTIONS SHOWN ON PLAN AS:
2. SEE DRAG STRUT CONNECTION SCHEDULE 4/S637 FOR WELD SIZE, PLATE THICKNESS, BOLT ROW SPAING AND NUMBER OF BOLTS.

1 BOLTED DRAG STRUT CONNECTION - BEAM TO COLUMN WEB

BEAM BEING BRACED	CONNECTING BEAM	CONNECTION DETAIL	SHEAR PLATE THICKNESS ('T')	FASTENERS 7/8" DIA A490-SC BOLTS	KICKER SIZE
W14, W18	W12, W14x30 AND LARGER	4/S630	1/2"		-
W21, W24	W18x35 AND LARGER	4/S630	1/2"		-

NOTES:

1. THIS DETAIL APPLIES TO FULL DEPTH CONNECTION NOTED AS ON PLANS
2. PROVIDE STANDARD HOLES AS PER AISC, TYP UNO
3. SHEAR PLATES SHALL BE ASTM A572 GRADE 50

6 FULL DEPTH BEAM TO BEAM CONNECTION SCHEDULE

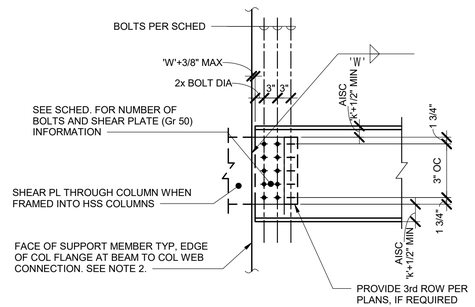

DOUBLE AND TRIPLE ROW BOLTED BEAM CONNECTION SCHEDULE

			DOUBLE ROW		TRIPLE ROW	
BEAM SIZE	NUMBER OF A490-SC BOLTS PER ROW	BOLT DIA (INCH)	SHEAR PLATE THK (INCH)	WELD SIZE ' W ' (INCH)	SHEAR PLATE THK (INCH)	WELD SIZE ' W ' (INCH)
W12, W14	3	1 1/8	1/2	3/8	1	7/8
W16, W18	4	1 1/8	3/4	1/2	1 1/4	7/8
W21	5	1 1/8	3/4	1/2	1 1/4	7/8
W24	6	1 1/8	3/4	1/2	1 1/4	7/8
W27	7	1 1/8	1	5/8	1 1/4	7/8
W30	8	1 1/8	1	7/8	1 1/2	1 3/8
W36	10	1 1/8	1 1/4	1 1/8	1 1/2	1 3/8
W40	10	1 1/8	1 1/4	1 1/8	1 1/2	1 3/8

SHEAR PLATE BOLT SPACING

NOTES:

1. THIS DETAIL APPLIES FOR CONNECTIONS SHOWN ON PLANS AS:
   DOUBLE BOLT ROW
   TRIPLE BOLT ROW
2. SHEAR PLATE SHALL CLEAR AISC 'k' REGION.
3. SEE TYPICAL DETAILS ON S634 FOR THE APPLICABLE SUPPORT MEMBER CONDITION FOR ADDITIONAL INFORMATION.

4 DOUBLE AND TRIPLE ROW BOLTED DRAG STRUT CONNECTION

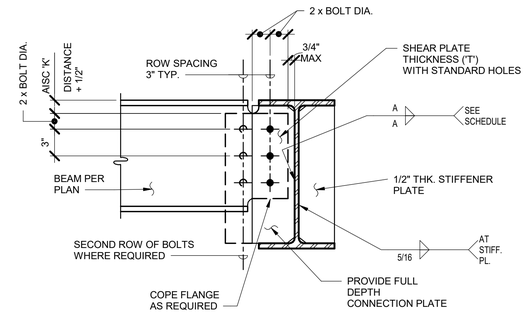

NOTES:

1. THIS DETAIL APPLIES FOR CONNECTIONS SHOWN ON PLAN AS:
2. SEE DRAG STRUT CONNECTION SCHEDULE 4/S637 FOR WELD SIZE, PLATE THICKNESS, BOLT ROW SPACING AND NUMBER OF BOLTS.

2 BOLTED DRAG STRUT CONNECTION - BEAM TO BEAM

NOT FOR CONSTRUCTION

09.AUG.21

belzberg architects
2321 MAIN STREET
SANTA MONICA, CA 90405
310.453.9611
www.belzbergarchitects.com

ARUP
Arup North America Ltd.
900 Wilshire Boulevard,
19th Floor
Los Angeles CA 90017
Tel: 310 578 4400
www.arup.com

#	DESCRIPTION	DATE

TYPICAL STEEL DETAILS

PROJECT NUMBER:

S637

8/10/2021 5:30:43 PM

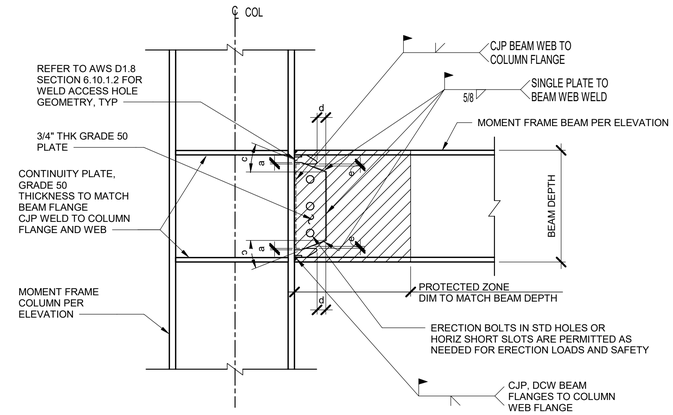

NOTES:

1. REFER TO LADBS QUALITY ASSURANCE PLAN ON SHEETS S005 THROUGH S007 FOR ADDITIONAL INFORMATION ON WELDING INCLUDING TREATMENT OF WELD TABS AND BACKING BARS ETC.
2. USE THE FOLLOWING VALUES FOR DETERMINING THE GEOMETRY.

a = 1/4" MIN, 1/2" MAX
b = 1" MIN
c = 30 DEG (±10 DEG)
d = 2" MIN (MIN DISTANCE FROM WELD ACCESS HOLE TO EDGE OF SHEAR TAB)
e = 1/2" MIN DISTANCE, 1" MAX DISTANCE FROM END OF FILLET WELD TO EDGE OF ACCESS HOLE

1 WUF-W CONNECTION DETAIL (SFRS)

NOT FOR CONSTRUCTION

09.AUG.21

belzberg architects
2321 MAIN STREET
SANTA MONICA, CA 90405
310.453.9611
www.belzbergarchitects.com

ARUP
Arup North America Ltd.
900 Wilshire Boulevard,
19th Floor
Los Angeles CA 90017
Tel: 310 578 4400
www.arup.com

#	DESCRIPTION	DATE

SPECIAL MOMENT FRAME DETAILS

PROJECT NUMBER:

S638

8/10/2021 5:30:44 PM

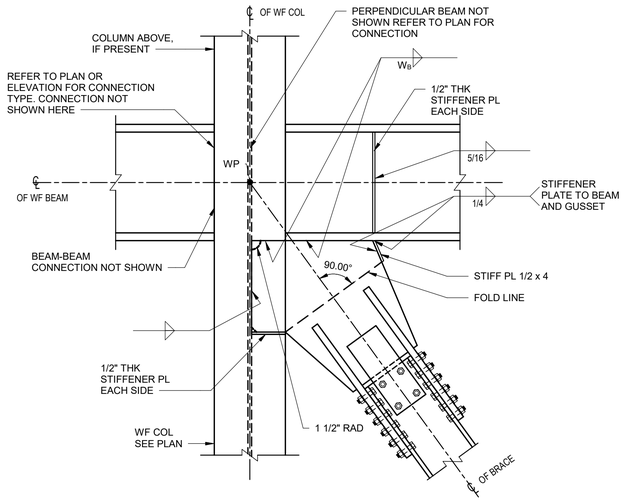

5 BEAM - COLUMN SCBF GUSSET CONNECTION TO WEB

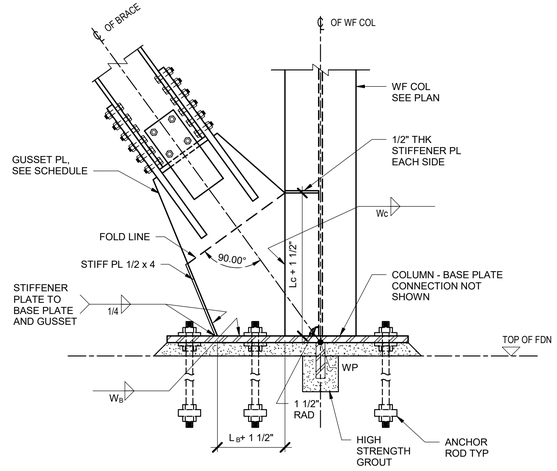

NOTES:

1. DETAIL IS INDICATIVE ONLY. SHOWN NUMBER AND SIZE OF BOLTS, ANCHOR RODS IS NOT FINAL.

3 COLUMN - BASE PLATE SCBF GUSSET CONNECTION TO WEB

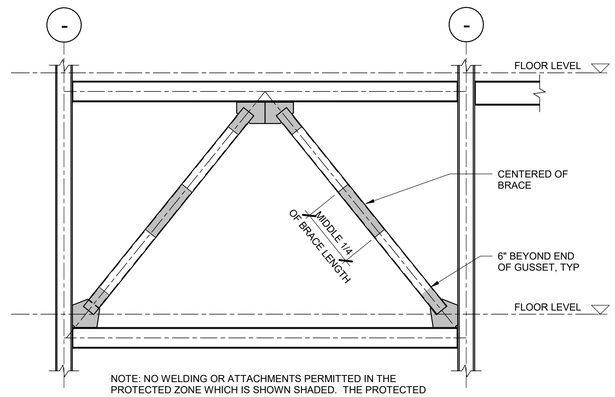

NOTE: NO WELDING OR ATTACHMENTS PERMITTED IN THE PROTECTED ZONE WHICH IS SHOWN SHADED. THE PROTECTED ZONE INCLUDES THE CONNECTION TO THE GUSSET AND THE GUSSET PLATE PER AISC.

1 SCBF PROTECTED ZONE

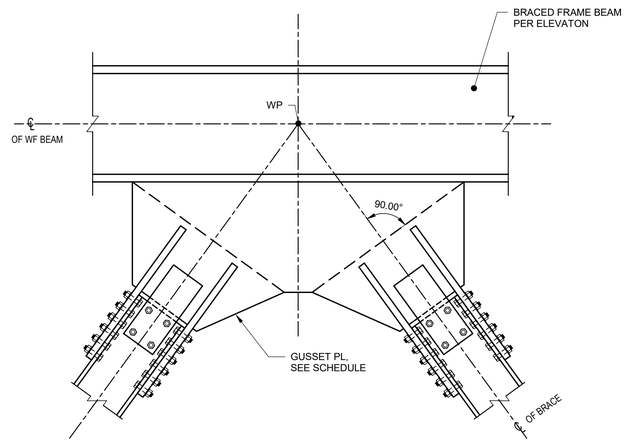

6 BEAM -- BRACE SCBF GUSSET CONNECTION

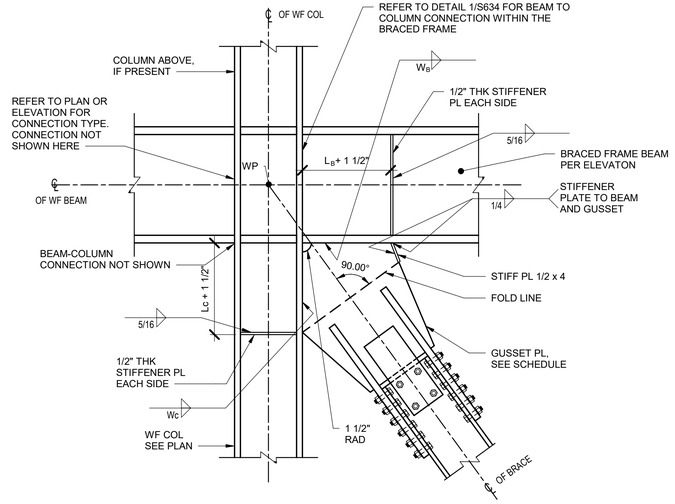

4 BEAM - COLUMN SCBF GUSSET CONNECTION TO FLANGE

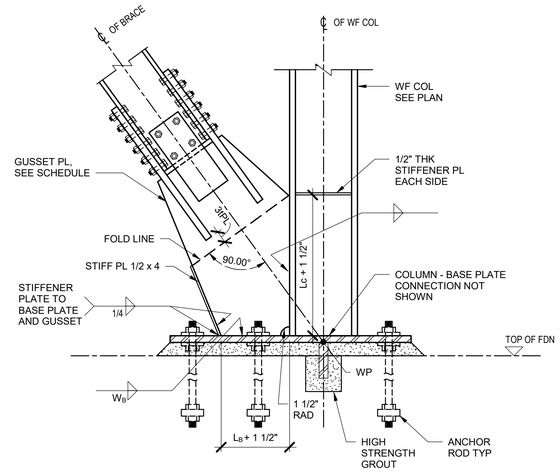

NOTES:

1. DETAIL IS INDICATIVE ONLY. SHOWN NUMBER AND SIZE OF BOLTS, ANCHOR RODS IS NOT FINAL.

2 COLUMN - BASEPLATE SCBF GUSSET CONNECTION TO FLANGE

NOT FOR CONSTRUCTION

09.AUG.21

belzberg architects
2321 MAIN STREET
SANTA MONICA, CA 90405
310.453.9611
www.belzbergarchitects.com

ARUP
Arup North America Ltd.
900 Wilshire Boulevard,
19th Floor
Los Angeles CA 90017
Tel: 310 578 4400
www.arup.com

#	DESCRIPTION	DATE

SFRS STEEL SPECIAL CONCENTRIC BRACED FRAME DETAILS

PROJECT NUMBER:

S640

8/10/2021 5:30:47 PM

SLAB TYPE (MARK ON PLAN)	Deck Profile (APPROVAL)	GAUGE	MINIMUM SECTION PROPERTIES PER FT			CONCRETE FILL		SLAB REINFORCEMENT	DECK ATTACHMENT TYPE				SIDE LAP	SHEAR STUD (DIA x AFTER-WELD LENGTH)	REMARKS
									TO PERIMETER SUPPORT		TO INTERMEDIATE SUPPORT				
			I (in4)	+S (IN4)	-S (IN4)	TYPE	MINIMUM THICKNESS ABOVE TOP FLUTE		PERPENDICULAR TO DECK	PARALLEL TO DECK	PERPENDICULAR TO DECK	PARALLEL TO DECK			
D-1	W3 FORMLOK	18	1.203	0.767	0.767	LIGHT WEIGHT CONCRETE	3 1/4"	#4@12" OC EW	3/4" DIA PUDDLE WELD ALL DOWN FLUTES	3/4" DIA PUDDLE AT 12" OC	3/4" DIA PUDDLE WELD ALL DOWN FLUTES	3/4" DIA PUDDLE AT 12" OC	BUTTON PUNCH AT 24" OC	3/4" x 5"	
D-2	W2 FORMLOK	18	0.564	0.471	0.481	LIGHT WEIGHT CONCRETE	2 1/2"	#4@12" OC EW	3/4" DIA PUDDLE WELD ALL DOWN FLUTES	3/4" DIA PUDDLE AT 12" OC	3/4" DIA PUDDLE WELD ALL DOWN FLUTES	3/4" DIA PUDDLE AT 12" OC	BUTTON PUNCH AT 24" OC	3/4" x 3 1/2"	

NOTES:

1. WHEREVER POSSIBLE, DECK LAYOUTS SHALL PROVIDE SHEETS OF SUFFICIENT LENGTH TO SPAN CONTINUOUSLY ACROSS AT LEAST THREE SPANS. ENDS SHALL TERMINATE OVER A SUPPORT PERPENDICULAR TO THE DECK SPAN, EXCEPT AT OPENINGS OR BUILDING EDGES WHERE DECKS MAY BE CANTILEVERED.
2. WHEN DECK IS CONTINUOUS OVER THREE SPANS, DECK DOES NOT REQUIRE VERTICAL SHORING DURING CONCRETE FILL PLACEMENT. FOR OTHER LAYOUTS, SHORE DECK AS REQUIRED BY MANUFACTURER.
3. DECK SHALL HAVE A MINIMUM OF 2" BEARING AT ALL SUPPORTING MEMBERS PERPENDICULAR TO DECK SPAN AND 2" AT ALL MEMBERS PARALLEL TO DECK SPAN.
4. WHERE TWO ADJACENT DECK SHEETS ARE SUPPORTED BY ONE FRAMING MEMBER, EACH SHEET SHALL INDIVIDUALLY SATISFY THE REQUIREMENTS OF NOTE 3 AND OF THE ATTACHMENT SCHEDULE.
5. DO NOT SUSPEND PIPING, LIGHT FIXTURES, CONDUITS OR OTHER UTILITIES FROM METAL DECK ALONE.
6. CONDUIT MAY BE PLACED IN SLAB ON METAL DECK SUBJECT TO THE REQUIREMENTS OF DETAIL X/SXXX.
7. DIAMETER OF PUDDLE WELD SHOWN REPRESENTS EFFECTIVE FUSION AREA.
8. PUDDLE WELD SHOWN MAY BE REPLACED WITH SAME NUMBER OF SHEAR STUDS WELDED THROUGH DECK ON A ONE-TO-ONE BASIS.
9. CONCRETE FILL THICKNESS SHOWN ON FRAMING PLANS AND DETAIL SHEETS ARE MINIMUM THICKNESSES. NO ALLOWANCES HAVE BEEN SHOWN FOR ADDITIONAL CONCRETE FILL REQUIRED TO COMPENSATE FOR BEAM OR DECK DEFLECTIONS AND TO MAINTAIN SURFACE TOLERANCES SPECIFIED.
10. UNLESS NOTED OTHERWISE STUDS SHALL BE 3/4" DIAMETER AND 4" LONG AFTER WELDING. HOWEVER A MINIMUM, THE SHEAR STUDS SHALL EXTEND AT MINIMUM 1.5" OVER THE FLUTES AND THE CONCRETE COVER SHALL NOT BE LESS THAN 0.5".
11. MAXIMUM DECK SPAN PRIOR TO CONCRETE REACHING ITS STRENGTH SHALL BE LIMITED TO THE VALUES (Lmax) INDICATED IN REMARKS. USE THE SAME VALUES FOR MULTIPLE SPAN IF NOT SPECIFICALLY SHOWN IN THE REMARKS

5 METAL DECK SCHEDULE

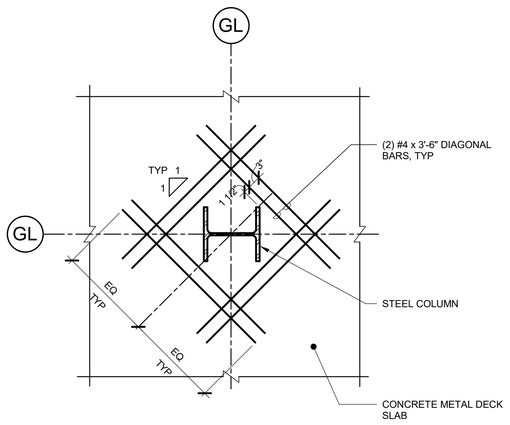

NOTES:

1. PLACE BARS AT CENTER OF CONCRETE FILL.
2. SEE 6/S651 FOR TYPICAL DETAIL OF METAL DECK AT COLUMN SUPPORT.

6 TYPICAL METAL DECK SLAB REINFORCING AT STEEL COLUMN

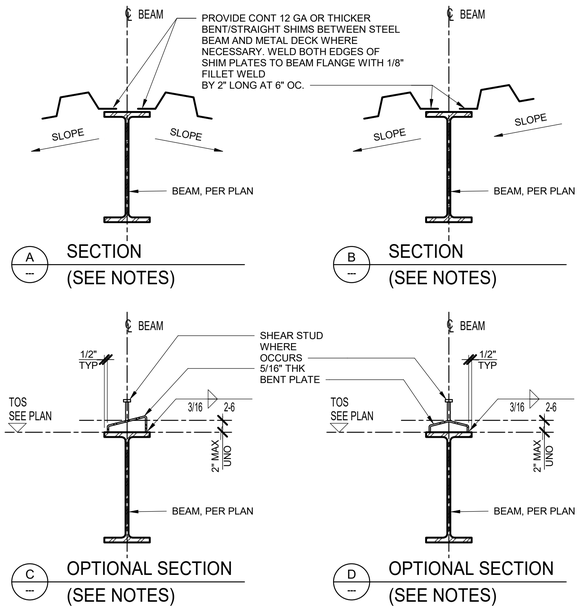

NOTES:

1. FOR SLOPES SEE PLAN.
2. ALL STEEL BEAM WEBS ARE ORIENTED TO ALIGN WITH THE VERTICAL PLANE, AND ARE NOT ROTATED.
3. METAL DECK CONTRACTOR SHALL CUT DECKING AT STEEL BEAMS TO ALLOW NECESSARY BENDING OF METAL DECK TO ACHIEVE BEARING/CONNECTION TO STEEL BEAM. SEE DETAILS 'A' AND 'B'.
4. WHERE DETAILS 'C' AND 'D' ARE SELECTED TO BE USED BY THE CONTRACTORS, THE FOLLOWING SHALL BE DONE:
   A. THE STEEL CONTRACTOR SHALL ADJUST TOP OF STEEL ELEVATIONS AT BEAMS TO ALLOW THE INSTALLATION OF BENT PLATES.
   B. THE STEEL CONTRACTOR SHALL COORDINATE THIS WORK WITH THE METAL DECK CONTRACTOR.
5. WIDE FLANGE BEAM CONDITIONS ARE SHOWN, WHEN HSS BEAMS OCCUR DETAILS ARE SIMILIAR.

4 STEEL BEAM DETAILS TO RECEIVE SLOPING METAL DECK

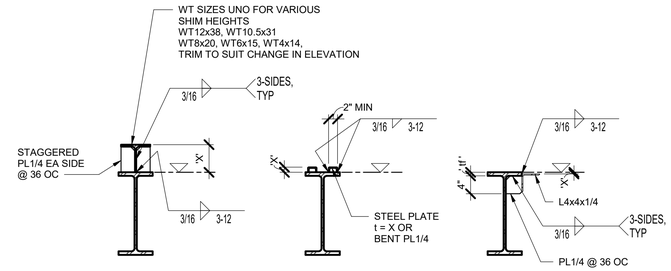

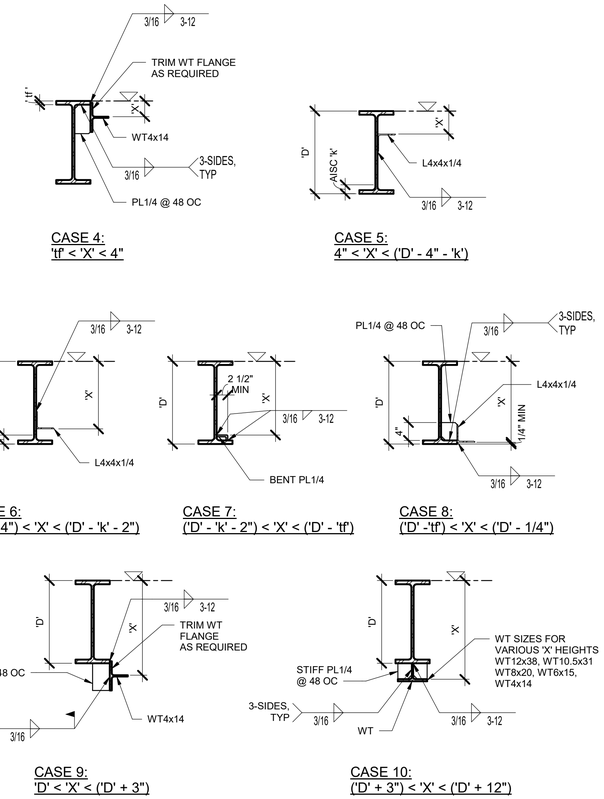

2 TYPICAL DECK SUPPORT AT ELEVATIONS OTHER THAN BEAM TOP OF STEEL

NOT FOR CONSTRUCTION

09.AUG.21

belzberg architects
2321 MAIN STREET
SANTA MONICA, CA 90405
310.453.9611
www.belzbergarchitects.com

ARUP
Arup North America Ltd.
900 Wilshire Boulevard,
19th Floor
Los Angeles CA 90017
Tel: 310 578 4400
www.arup.com

#	DESCRIPTION	DATE

TYPICAL METAL DECK DETAILS

PROJECT NUMBER:

S650

8/10/2021 5:30:51 PM

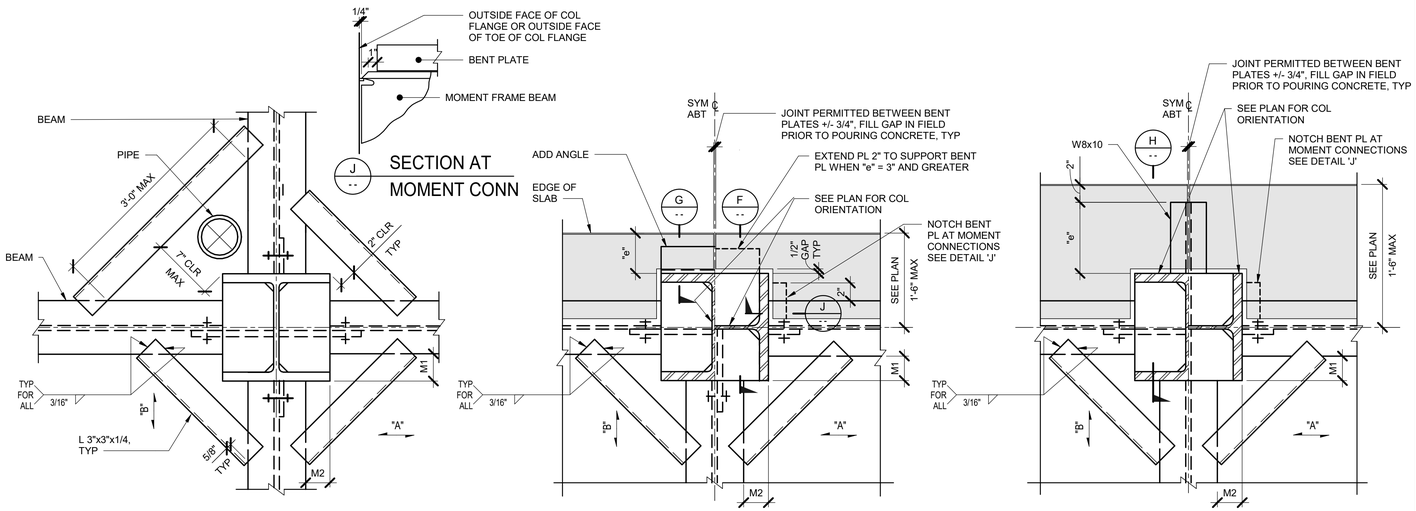

A INTERIOR COLUMN

NOTE: OMIT ANGLE IN DECK DIR. "A" WHEN M1 ≤ 6" OR IN DECK DIR. "B" WHEN M2 ≤ 6".

e ≤ 8"

B EXTERIOR COLUMN

NOTE: OMIT ANGLE IN DECK DIR. "A" WHEN M1 ≤ 6" OR IN DECK DIR. "B" WHEN M2 ≤ 6".

e > 8"

C EXTERIOR COLUMN

NOTES:
1. OMIT ANGLE IN DECK DIR. "A" WHEN M1 ≤ 6" OR IN DECK DIR. "B" WHEN M2 ≤ 6".
2. SEE DETAIL 'B' FOR INFORMATION NOT SHOWN.

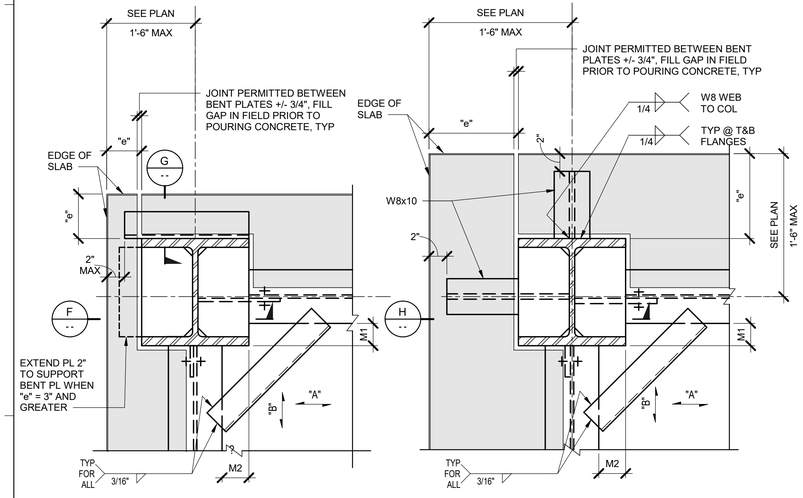

D CORNER COLUMN

NOTES:
1. OMIT ANGLE IN DECK DIR. "A" WHEN M1 ≤ 6" OR IN DECK DIR. "B" WHEN M2 ≤ 6".
2. SEE DETAIL 'B' FOR INFORMATION NOT SHOWN.

e ≤ 8"

e > 8"

E CORNER COLUMN

NOTES:
1. OMIT ANGLE IN DECK DIR. "A" WHEN M1 ≤ 6" OR IN DECK DIR. "B" WHEN M2 ≤ 6".
2. SEE DETAIL 'B' FOR INFORMATION NOT SHOWN.

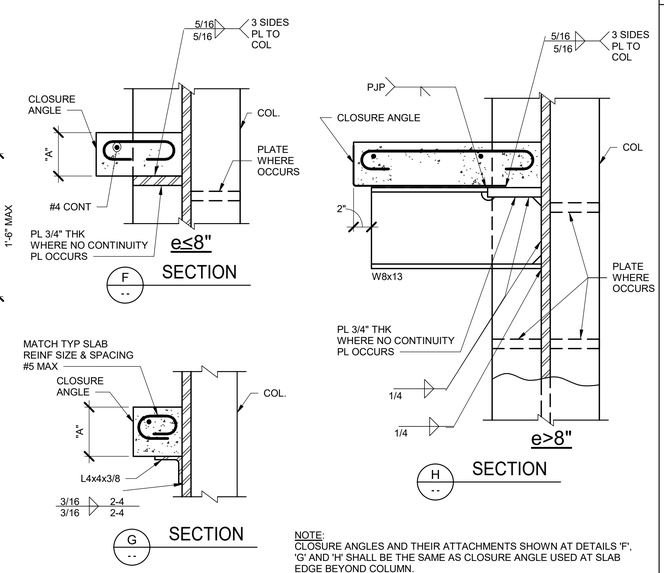

NOTE:
CLOSURE ANGLES AND THEIR ATTACHMENTS SHOWN AT DETAILS 'F', 'G' AND 'H' SHALL BE THE SAME AS CLOSURE ANGLE USED AT SLAB EDGE BEYOND COLUMN.

6 TYPICAL SUPPPORT OF METAL DECK AT WF COLUMNS

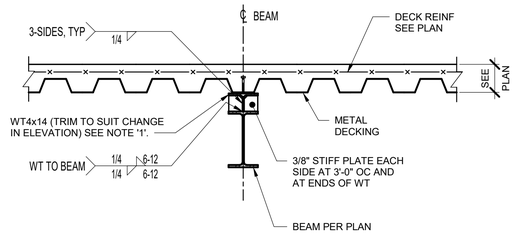

DECK FLUTES PARALLEL WITH BEAM

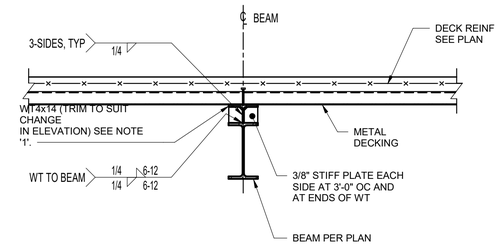

DECKING PERPENDICULAR TO BEAM

NOTES:

1. USE WT PER CASE 1 IN 2/S650 (TRIM TO SUIT CHANGE IN ELEVATION) INSTEAD OF WT4x14 WHERE DEPRESSION BEYOND EXCEEDS 4" UNO.

1 WT ON TOP OF FLOOR BEAM DETAIL

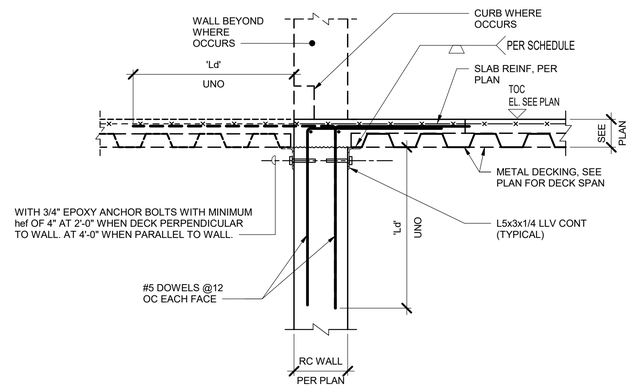

NOTES:

1. STAGGER ANCHOR BOLTS WHERE SLAB OCCURS AT BOTH SIDES OF WALL.
2. CONCRETE WALL REINFORCEMENT NOT SHOWN FOR CLARITY.
3. JOINTS IN CONTINUOUS ANGLE TO BE PARTIAL PENETRATION GROOVE WELD.

2 METAL DECK TO CONCRETE WALL CONNECTION DETAIL

NOT FOR CONSTRUCTION

09.AUG.21

belzberg architects
2321 MAIN STREET
SANTA MONICA, CA 90405
310.453.9611
www.belzbergarchitects.com

ARUP
Arup North America Ltd.
900 Wilshire Boulevard,
19th Floor
Los Angeles CA 90017
Tel: 310 578 4400
www.arup.com

#	DESCRIPTION	DATE

TYPICAL METAL DECK DETAILS

PROJECT NUMBER:

S651

8/10/2021 5:30:56 PM

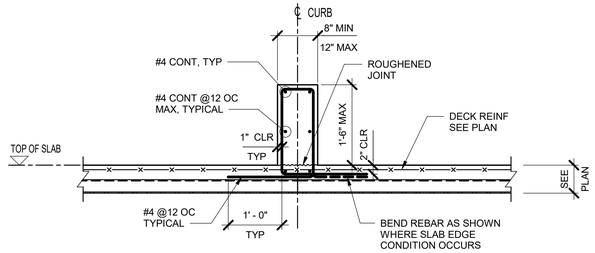

A -- SECTION

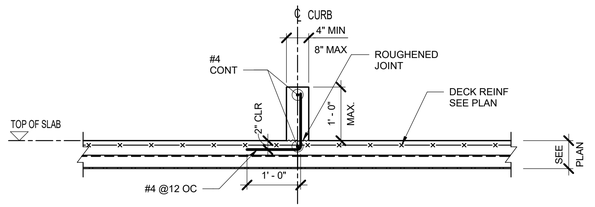

B -- SECTION

NOTES:

1. SEE ARCHITECTURAL DRAWINGS FOR LOCATION AND DIMENSIONS OF CONCRETE CURBS, UNO ON PLANS.

5 CONCRETE CURB ON METAL DECK

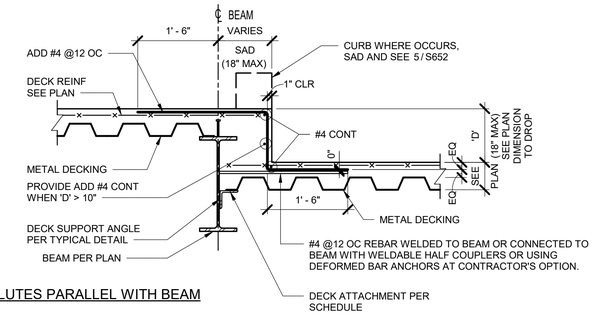

DECK FLUTES PARALLEL WITH BEAM

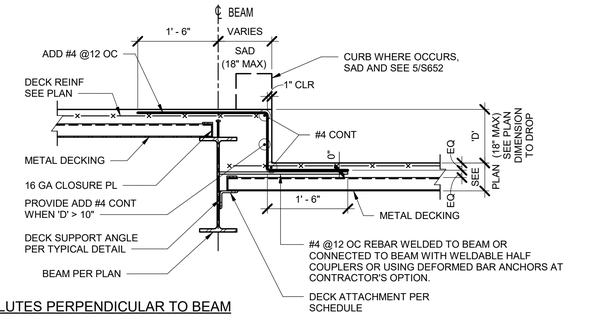

DECK FLUTES PERPENDICULAR TO BEAM

3 SLAB DEPRESSION DETAIL (DEPRESSION GREATER THAN 4")

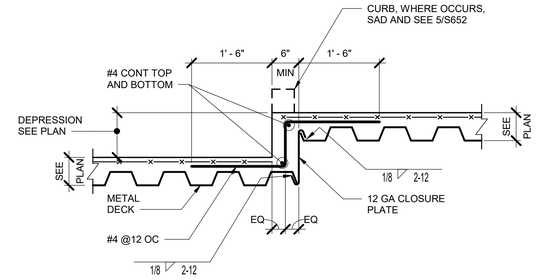

1 EDGE OF DEPRESSION PARALLEL WITH DECK SPAN

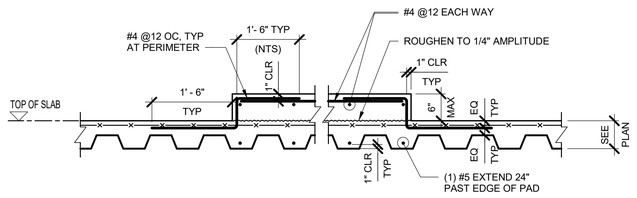

A -- EQUIPMENT BASE POURED AFTER CONCRETE FILL REACHES DESIGN STRENGTH

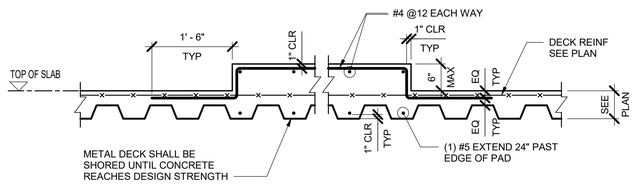

B -- EQUIPMENT BASE POURED MONOLITHICALLY WITH CONCRETE FILL

NOTES:

1. SEE MECHANICAL, ELECTRICAL, PLUMBING AND ARCHITECTURAL DRAWINGS FOR LOCATION AND DIMENSIONS OF EQUIPMENT PADS.
2. SEE 2/S653 WHERE PAD HEIGHT EXCEEDS 6".

6 EQUIPMENT BASE ON METAL DECK

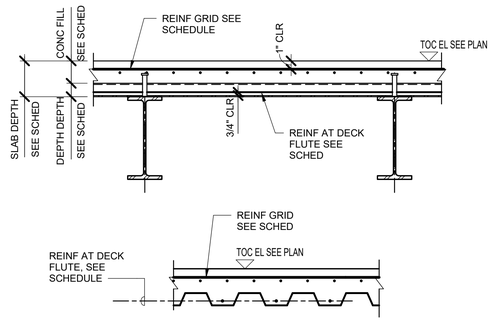

NOTES:

1. SEE PLANS FOR EXTENT OF STEEL DECK TYPE AND DETAILS AND SCHEDULE FOR DECK CONSTRUCTION.
2. DECK SHALL EXTEND OVER THREE OR MORE SPANS IF POSSIBLE.
3. PROVIDE ADDITIONAL CONCRETE AS REQUIRED TO COMPENSATE FOR THE STEEL BEAMS AND DECK DEFLECTIONS CAUSED BY THE DEAD LOAD OF WET CONCRETE.
4. THE ADDITIONAL CONCRETE THICKNESS TO COMPENSATE FOR THE DEAD LOAD DEFLECTIONS SHALL BE LIMITED TO 1/2 INCH.
5. SEE 5/S650 FOR DECK INFORMATION.

4 STEEL DECK DETAILS

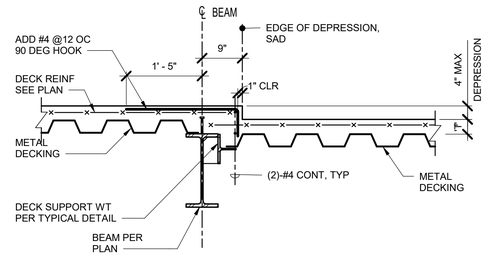

DECK FLUTES PARALLEL WITH BEAM

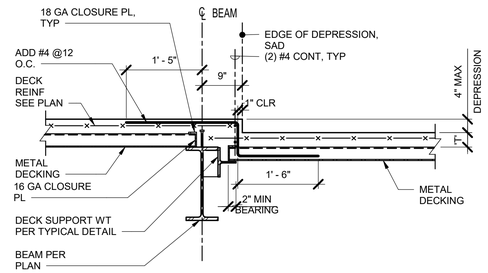

DECK FLUTES PERPENDICULAR TO BEAM

2 SLAB DEPRESSION DETAIL (DEPRESSION NOT GREATER THAN 4")

NOT FOR CONSTRUCTION

09.AUG.21

belzberg architects
2321 MAIN STREET
SANTA MONICA, CA 90405
310.453.9611
www.belzbergarchitects.com

ARUP
Arup North America Ltd.
900 Wilshire Boulevard,
19th Floor
Los Angeles CA 90017
Tel: 310 578 4400
www.arup.com

#	DESCRIPTION	DATE

TYPICAL METAL DECK DETAILS

PROJECT NUMBER:

S652

8/10/2021 5:30:58 PM

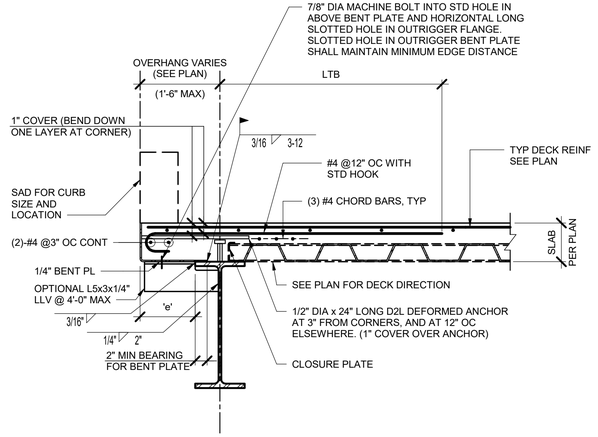

NOTES:
1. FOR ALL CONDITIONS OTHER THAN FACADE SUPPORT, ELEVATOR DOOR SILLS AND WELDED ATTACHMENTS TO THE SLAB EDGE USE 3 / S653
2. AT SPLICED JOINTS IN 1/4" THICK BENT PLATE PROVIDE D2L ANCHORS NO MORE THAN 3" EITHER SIDE OF SPLICE. SPLICED JOINTS ARE NOT REQUIRED TO BE WELDED. MAX JOINT GAP SHALL BE 3/8".
3. WHERE OPTIONAL OUTRIGGER ANGLE PROVIDED TO SUPPORT BENT PLATE, WELD CAN BE REDUCED TO A TACK WELD TO FLANGE. WHERE OUTRIGGER IS PROVIDED, 2" MIN OVERLAP BETWEEN BENT PLATE AND BEAM FLANGE MAY REDUCE TO 3/4" MIN. WHERE BEAM FLANGE IS < 1/2" PROVIDE PJP, TOP OF OUTRIGGER FLANGE, IN FLAT POSITION IN LIEU OF FILLET WELD. ANGLES SPECIFIED IN THIS DETAIL MAY BE SUBSTITUTED WITH BENT PLATE. THICKNESS AND LEG DIMENSIONS MUST MATCH.
4. CHORD REINFORCING SHALL HAVE A MINIMUM SPACING OF 3 BAR DIAMETERS, BUT NOT LESS THAN 1 1/2" AND A MINIMUM CONCRETE COVER OF 1".
5. 1/4" THICK CONTINUOUS PLATE MIGHT BE SPLICED, PROVIDE D2L ANCHORS NO MORE THAN 3" EITHER SIDE OF SPLICE.

5 TYPICAL SLAB EDGE WITH OVERHANG < 1'-6"

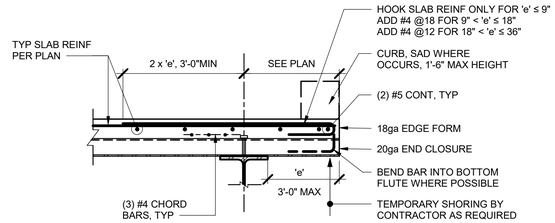

DECK SPAN - PERPENDICULAR

THICKNESS OF CLOSURE ANGLE, GA									
'D' MAX \ 'e' MAX	0"	2"	3"	4"	5"	6"	7"	8"	9"
5 1/2"	16	16	16	16	14	12	12	10	10
6 1/2"	16	16	16	14	12	12	12	10	10
7 1/2"	16	16	14	14	12	12	10	10	-
9"	14	14	14	12	12	10	10	-	-

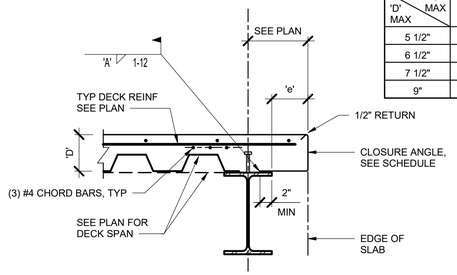

WELD SCHEDULE	
BENT PLATE THICKNESS	WELD 'A'
16 GA	3/32"
14 GA AND THICKER	1/8"

DECK SPAN - PARALLEL

NOTES:
1. REFER TO DETAILS 4 / S653 AND 5 / S653 FOR SLAB EDGES SUPPORTING FACADE ELEMENTS AND WELDED ATTACHMENTS TO THE SLAB EDGE.
2. REFER TO DETAIL 4 / S653 WHEN THE EDGE DISTANCE 'e' EXCEEDS 9" AT THE DECK PARALLEL CONDITION.
3. NO WALLS, CURBS LARGER THAN STATED OR ANY SIGNIFICANT WEIGHT ATTACHMENT PERMITTED AT DECK CANTILEVER.
4. GUARD RAIL POST ATTACHMENT AT CANTILEVER END PERMITTED. REFER TO DETAIL X/SXXX.
5. CHORD REINFORCEMENT PER 3/S653 AND 4 / S653.

3 EDGE OF SLAB WITHOUT BENT PLATE

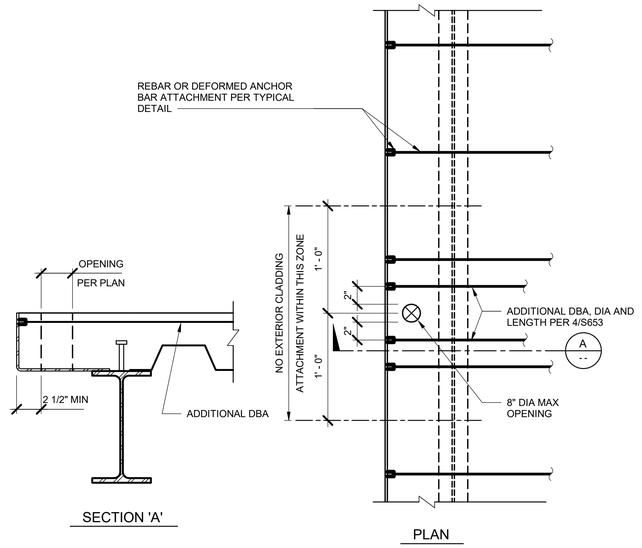

SECTION 'A'

PLAN

NOTES:
1. DOES NOT APPLY IF OUTRIGGER DETAIL PER 4 / S653 IS USED.

1 OPENING IN METAL EDGE OF DECKS

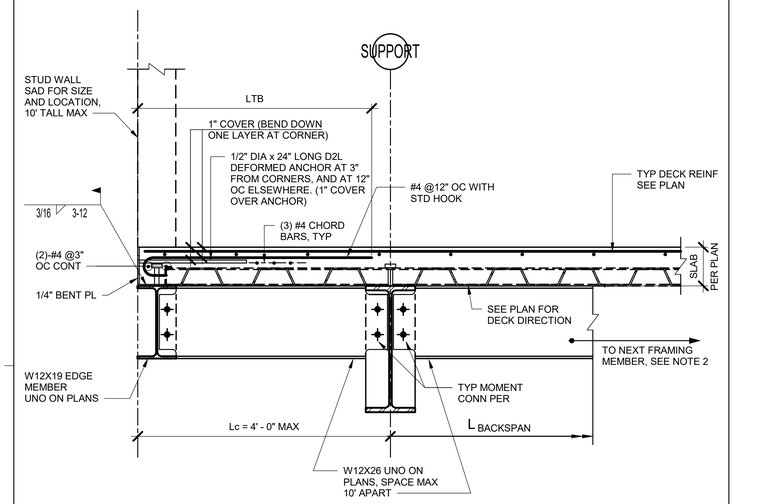

NOTES:
1. SEE 5 / S653 FOR INFO NOT SHOWN.
2. IF L BACKSPAN EXCEEDS 2xLc, PROVIDE A CROSS-FRAMING W12X26 TO TERMINATE THE BEAM AT BACKSPAN.

6 TYPICAL SLAB EDGE WITH 2'-4" < OVERHANG < 4'

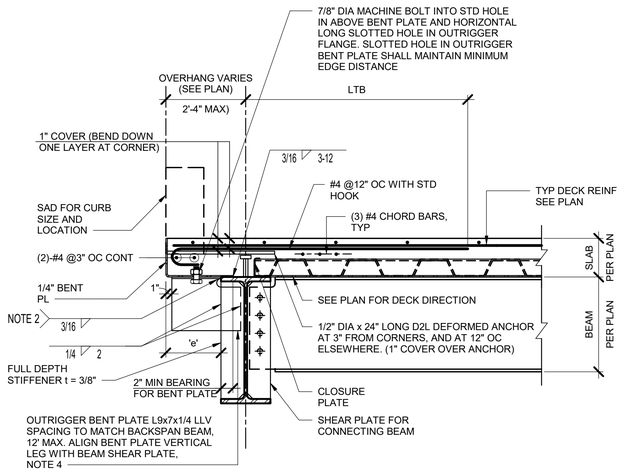

NOTES:
1. FOR ALL CONDITIONS OTHER THAN FACADE SUPPORT AND WELDED ATTACHMENTS TO THE SLAB EDGE USE 3 / S653 .
2. WHERE BEAM FLANGE IS < 1/2" PROVIDE PJP AT TOP OF OUTRIGGER FLANGE IN LIEU OF FILLET WELD.
3. OPTION TO SUBSTITUTE WITH ANGLE (THICKNESS AND LEG DIMENSIONS TO MATCH) CHORD REINFORCING SHALL HAVE A MINIMUM SPACING OF 3 BAR DIAMETERS, BUT NOT LESS THAN 1 1/2" AND A MINIMUM CONCRETE COVER OF 1".
4. 1/4" THICK CONTINUOUS PLATE MIGHT BE SPLICED, PROVIDE D2L ANCHORS NO MORE THAN 3" EITHER SIDE OF SPLICE.

4 TYPICAL SLAB EDGE WITH 1'-6" < OVERHANG < 2'-4"

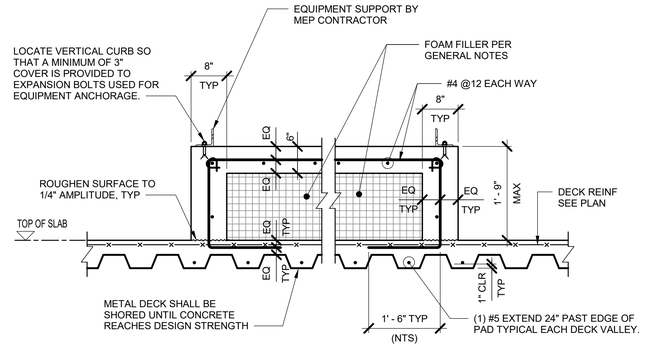

(A) TYPICAL EQUIPMENT PAD ON METAL DECK DETAIL

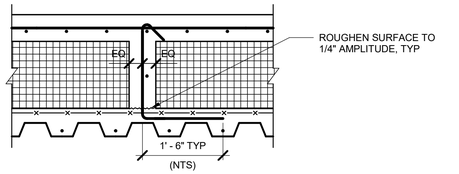

(B) INTERMEDIATE CURB DETAIL

NOTES:
1. SEE MECHANICAL, ELECTRICAL, PLUMBING AND ARCHITECTURAL DRAWINGS FOR LOCATION AND DIMENSIONS OF EQUIPMENT PAD.
2. PAD SHALL BE POURED AFTER CONCRETE FILL REACHES DESIGN STRENGTH.
3. SEE 6 / S652 WHERE PAD HEIGHT EQUAL/LESS THAN 6".
4. INTERMEDIATE CURB REQUIRED FOR SLAB ON FOAM WHERE SPAN IS GREATER THAN 10'.

2 EQUIPMENT PAD ON METAL DECK (6" < PAD HEIGHT <= 1'-9")

NOT FOR CONSTRUCTION

09.AUG.21

ba
belzberg architects
2321 MAIN STREET
SANTA MONICA, CA 90405
310.453.9611
www.belzbergarchitects.com

ARUP
Arup North America Ltd.
900 Wilshire Boulevard,
19th Floor
Los Angeles CA 90017
Tel: 310 578 4400
www.arup.com

#	DESCRIPTION	DATE

TYPICAL METAL DECK DETAILS

PROJECT NUMBER:

S653

8/10/2021 5:31:01 PM

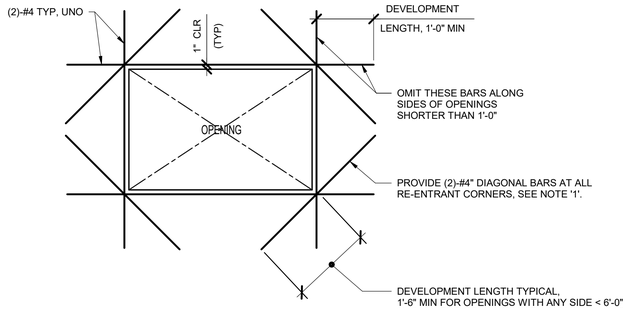

NOTES:

1. OMIT DIAGONAL BARS FOR OPENING LESS THAN 9" SQUARE 12" ROUND.
2. REINFORCING IS SIMILAR AT ROUND OPENINGS.

5 SLAB REINF. AT METAL DECK OPENINGS

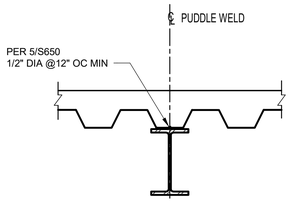

A -- BOTTOM FLUTE CENTERED AT SUPPORT

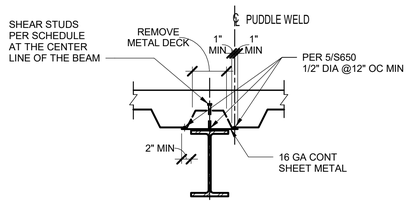

ALTERNATIVE TO CONDITION 'B' DETAIL F WHEN MIN CLEARANCE FROM STUD TO DECK FLUTE CANNOT BE ATTAINED

B -- DECK PARALLEL TO BEAM

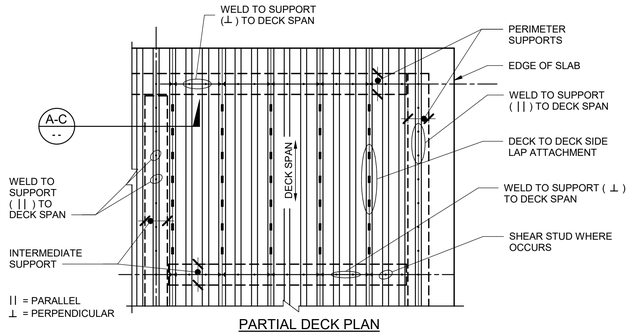

PARTIAL DECK PLAN

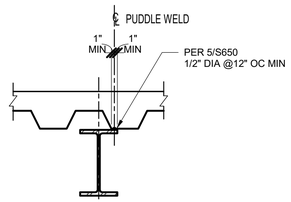

C -- BOTTOM FLUTE NOT CENTERED AT SUPPORT (ONLY ALLOWED AT MINOR BEAMS AROUND OPENINGS)

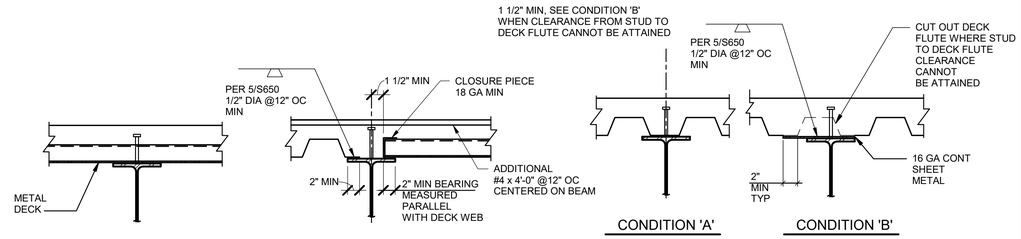

D -- DECK PERPENDICULAR TO BEAM

E -- DECK TRANSITION ON BEAM

F -- DECK PARALLEL TO BEAM

NOTE:
1. SEE 6 / S655 FOR PLACEMENT OF STUDS ON STEEL BEAMS.

3 METAL DECK ATTACHMENT DETAILS

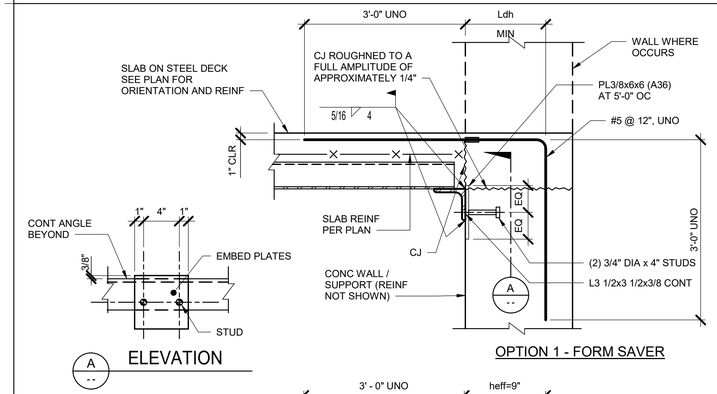

A -- ELEVATION

OPTION 1 - FORM SAVER

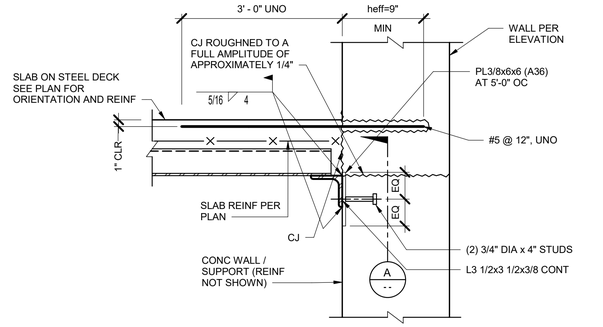

OPTION 2 - EPOXY DOWEL
(ONLY WHEN WALL CONT)

6 SLAB TO CONCRETE AT BASEMENT WALL

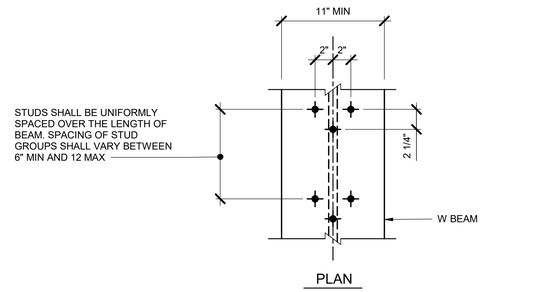

PLAN

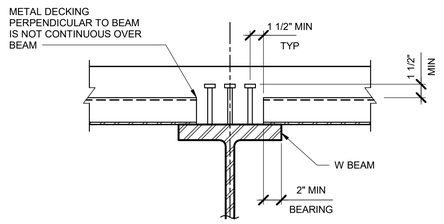

SECTION

4 STUD PLACEMENT DETAIL FOR STUD SPACING > 3 STUDS/FT <= 6 STUDS/FT

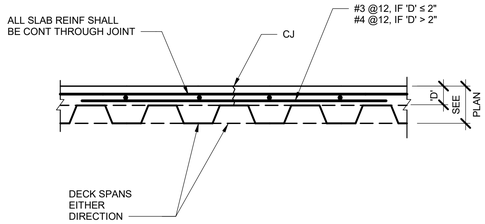

NOTES:

1. SUBMIT PROPOSED LOCATIONS OF ALL CONSTRUCTION JOINTS TO ENGINEER FOR REVIEW AND ACCEPTANCE PRIOR COMMENCEMENT OF CONSTRUCTION.

2 SLAB ON DECK CONSTRUCTION JOINT

NOT FOR CONSTRUCTION

09.AUG.21

belzberg architects
2321 MAIN STREET
SANTA MONICA, CA 90405
310.453.9611
www.belzbergarchitects.com

ARUP
Arup North America Ltd.
900 Wilshire Boulevard,
19th Floor
Los Angeles CA 90017
Tel: 310 578 4400
www.arup.com

#	DESCRIPTION	DATE

TYPICAL METAL DECK DETAILS

PROJECT NUMBER:

S654

8/10/2021 5:31:03 PM

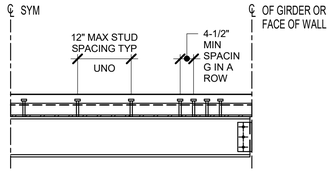

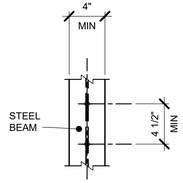

1 ROW PER FLUTE
(PLAN VIEW)

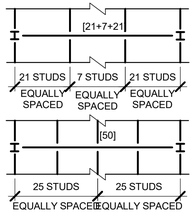

NOTE:

1. WHERE STUD SPACING IS LESS THAN 4 1/2", USE 2 ROWS OF STUDS SPACED 3" APART.

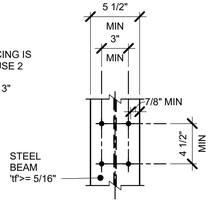

2 ROWS PER FLUTE
(PLAN VIEW)

A -- DECK PARALLEL TO BEAM/ GIRDER

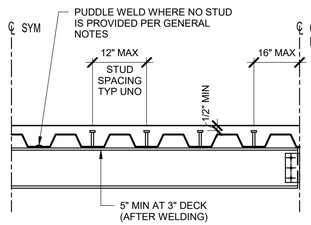

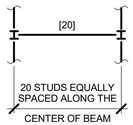

NOTE:

1. WHERE MORE THAN ONE STUD PER FLUTE IS REQUIRED PLACE 2 STUDS PER FLUTE BEGINNING AT EACH END AND WORK TOWARDS MIDSPAN OF BEAM. USE SIMILAR PROCEDURE IF MORE THAN 2 STUDS PER FLUTE ARE REQUIRED.

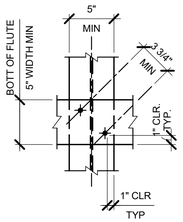

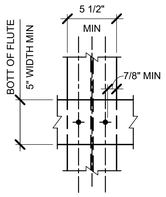

2 STUDS PER FLUTE (PLAN VIEW)

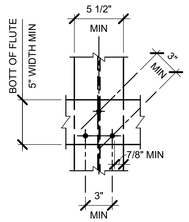

3 STUDS PER FLUTE
(PLAN VIEW)

B -- DECK PERPENDICULAR OR SKEWED TO BEAM

NOTES:

1. NUMBER OF SHEAR STUDS IS SHOWN AS [X] ON PLANS AND FRAME ELEVATIONS. STUDS AT 12" OC MINIMUM ON ALL FRAMING BEAMS.
2. SEE METAL DECK SCHEDULE IN 5/S650 FOR STUD DIAMETER AND LENGTH.

6 WELDED SHEAR STUD LAYOUTS

1 1/2" = 1'-0"

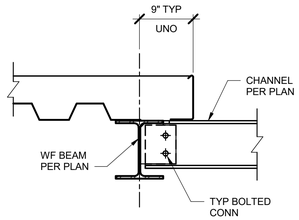

SECTION 'A'

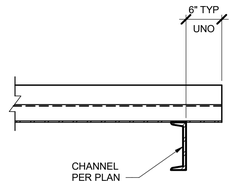

SECTION 'B'

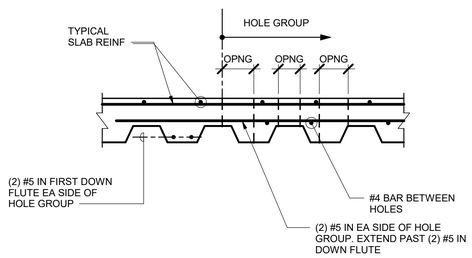

SECTION 'C'

SLAB OPENING TRIM REINF SCHEDULE	
OPENING SIZE, W	TRIM BARS AROUND OPENING
0 - 6" < W ≤ 2' - 0"	(2) - #4
2' - 6" > W > 10' - 0"	(2) - #5
10' - 0" ≥ W ≥ 18' - 0"	(2) - #6

EXTEND BARS BEYOND EDGE OF OPENING FOR DISTANCE EQUAL TP Ld, DEVELOPMENT LENGTH.

NOTES:

1. HOLES MAY BE EITHER CANNED OR CORED. IF CORED, THE CONTRACTOR SHALL LAY OUT THE HOLE LOCATIONS AND PROVIDE TRIM REBAR AS SPECIFIED PRIOR TO POURING. HOLE LOCATIONS SHALL BE CLEARLY MARKED SO THAT REBAR WILL NOT BE CUT DURING CORING. IF HOLES ARE TO BE CUT IN THE DECK PRIOR TO THE SLAB POUR, THE CONTRACTOR SHALL PROVIDE STRENGTHENING OR PROPPING IN ACCORDANCE WITH THE DECK MANUFACTURER'S REQUIREMENTS AND SEE STRUCTURAL GENERAL NOTES. ANY MISCELLANEOUS STEEL USED TO STRENGTHEN THE METAL DECK SHALL BE INSTALLED ON THE UNDERSIDE OF THE DECK.
2. CONTRACTOR SHALL COORDINATE OPENING SIZES & LOCATIONS WITH MEP CONTRACTORS AND ARCHITECTURAL DRAWINGS.
3. OPENING FRAMING SIZES SHOWN ARE TYPICAL MIN SIZE UNO ON DRAWING.

4 TYPICAL OPENING IN CONCRETE FILLED METAL DECK

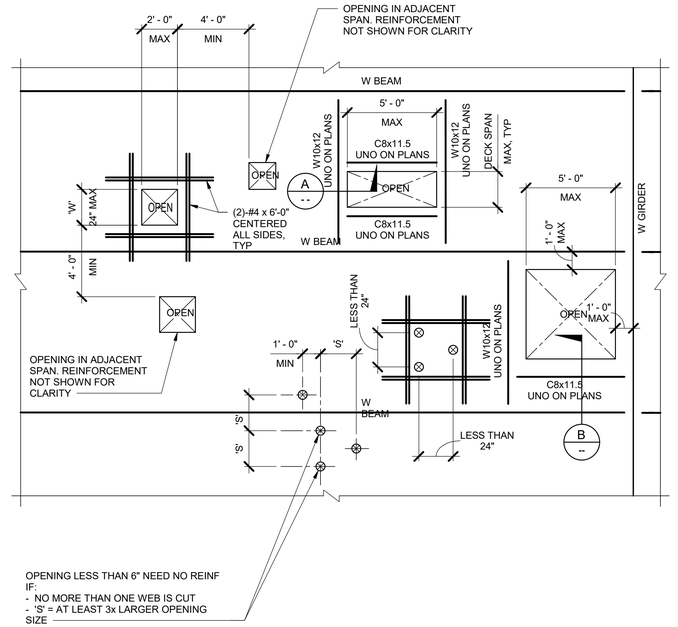

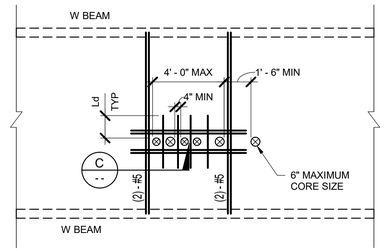

NOT FOR CONSTRUCTION

09.AUG.21

belzberg architects
2321 MAIN STREET
SANTA MONICA, CA 90405
310.453.9611
www.belzbergarchitects.com

ARUP
Arup North America Ltd.
900 Wilshire Boulevard,
19th Floor
Los Angeles CA 90017
Tel: 310 578 4400
www.arup.com

#	DESCRIPTION	DATE

TYPICAL METAL DECK DETAILS

PROJECT NUMBER:

S655

8/10/2021 5:31:05 PM

DUCTWORK SYMBOLS

SYMBOL	DESCRIPTION
32x20 / 12x6	DOUBLE-LINE AND SINGLE-LINE RECTANGULAR DUCT, FIRST NUMBER INDICATES SIDE IN VIEW IN INCHES, SECOND NUMBER INDICATES SIDE IN DEPTH IN INCHES
24ø / 12ø	DOUBLE-LINE AND SINGLE-LINE ROUND DUCT, NUMBER INDICATES DIAMETER IN INCHES
32x20(L2) / 12x6(L2)	ACOUSTICAL LINED DUCTWORK, SIZES GIVEN ARE CLEAR INSIDE DIMENSIONS IN INCHES
RorD / RorD	INCLINED RISE OR DROP IN DIRECTION OR AIR FLOW
	EXISTING DUCTWORK
	FLEXIBLE DUCT
	FLEXIBLE CONNECTION
	DIRECTION OF AIR FLOW
	TRANSITION / REDUCER
	RADIUS ELBOW WITH TURNING VANES & MITERED ELBOW WITH TURNING VANES
	VANED ELBOW OR RADIUS ELBOW (USE VANED ELBOW WHERE SPACE WILL NOT PERMIT THE USE OF LONG RADIUS ELBOW)
	DUCT - END CAP
	RECTANGULAR DUCT BRANCH
	CIRCULAR DUCT BRANCH
	RECTANGULAR SUPPLY AIR DUCT (UP AND DOWN)
	RECTANGULAR RETURN AIR DUCT (UP AND DOWN)
	RECTANGULAR EXHAUST AIR DUCT (UP AND DOWN)
	RECTANGULAR OUTSIDE AIR DUCT (UP AND DOWN)
	ROUND SUPPLY AIR DUCT (UP AND DOWN)
	ROUND RETURN AIR DUCT (UP AND DOWN)
	ROUND EXHAUST AIR DUCT (UP AND DOWN)
	ROUND OUTSIDE AIR DUCT (UP AND DOWN)
VD	VOLUME DAMPER
M	MOTORIZED DAMPER
BDD	BACKDRAFT DAMPER
FD	FIRE DAMPER
SD	SMOKE DAMPER
FSD	COMBINATION FIRE/SMOKE DAMPER
SMD	DUCT SMOKE DETECTOR
TYPE	AIR TERMINAL - SIDEWALL GRILLE/REGISTER (AIRFLOW DIRECTION AND TYPE SHOWN)
TYPE (CFM)	AIR TERMINAL - CEILING SUPPLY (AIRFLOW DIRECTION AND TYPE SHOWN)
TYPE (CFM)	AIR TERMINAL - CEILING RETURN (AIRFLOW DIRECTION AND TYPE SHOWN)
TYPE (CFM)	AIR TERMINAL - CEILING EXHAUST (AIRFLOW DIRECTION AND TYPE SHOWN)
TYPE (CFM)	AIR TERMINAL - CEILING SUPPLY - ROUND (AIRFLOW DIRECTION AND TYPE SHOWN)
TYPE (CFM)	AIR TERMINAL - CEILING RETURN - ROUND (AIRFLOW DIRECTION AND TYPE SHOWN)
TYPE (CFM)	AIR TERMINAL - CEILING EXHAUST - ROUND (AIRFLOW DIRECTION AND TYPE SHOWN)
	LINEAR DIFFUSER (AIR DIRECTION AND TYPE SHOWN)
AD	ACCESS DOOR
	TRANSFER DUCT WITH GRILLES
UC	UNDERCUT DOOR
	AIR FLOW ARROW (SUPPLY)
	AIR FLOW ARROW (RETURN/EXHAUST)
UP / DN	SLOPE DIRECTION ARROW

DUCTWORK SYMBOLS

SYMBOL	DESCRIPTION
	FAN - ROOF MOUNTED - MUSHROOM
	FAN - ROOF MOUNTED - UPBLAST
	FAN - CENTRIFUGAL
	FAN - CENTRIFUGAL PLUG/PLENUM
	FAN - AXIAL
	LOUVER
AHU	AIR HANDLING UNIT ACCESS SECTION
AHU	AIR HANDLING UNIT PLENUM SECTION
P C	COIL - PRE-HEAT
R C	COIL - RE-HEAT
C C	COIL - COOLING
H C	COIL - HEATING
DX C	COIL - DX
	FAN COIL UNIT
	VAV BOX - SINGLE DUCT
	SOUND ATTENUATOR
	AIR SEPARATOR
TS	TEMPERATURE SENSOR
R	RELATIVE HUMIDITY SENSOR
DPS	DIFFERENTIAL PRESSURE
CO	CARBON MONOXIDE SENSOR
CO2	CARBON DIOXIDE SENSOR
O	OCCUPANCY SENSOR
T	THERMOSTAT
H	HUMIDITY SENSOR
SP	STATIC PRESSURE SENSOR
XX-YY	SENSOR - SEE ABBREVIATIONS FOR TYPE
XX-YY	SENSOR (DUCT MOUNTED) - SEE ABBREVIATIONS FOR TYPE
	ROOF EXHAUST FAN (PLAN)
L (SQ.FT.)	LOUVER (DOOR AND WALL) AND LOUVER FREE AREA

GENERAL SYMBOLS AND TAGS

SYMBOL	DESCRIPTION
AHU 8	EQUIPMENT TYPE / EQUIPMENT TAG NUMBER
	LINE BREAK

PIPING SYMBOLS

SYMBOL	DESCRIPTION
	EXISTING
	NEW (LINETYPE VARIES PER SYSTEM)
	ELBOW TURN DOWN
	TEE TURN DOWN
	PIPE TURN UP
	TEE TURN UP
	CAPPED PIPE
	INSULATED PIPE
XXX / X	XXXX - SERVICE TYPE. SEE ABBREVIATIONS
R	PITCH OF PIPE (RISE)
D	PITCH OF PIPE (DROP)
	CONCENTRIC REDUCER/EXPANDER
FOB / FOT	ECCENTRIC REDUCER/EXPANDER
	PIPE ANCHOR
	UNION JOINT
	FLANGED JOINT
	EXPANSION LOOP
	EXPANSION JOINT
	PIPE ALIGNMENT GUIDE
	CHECK VALVE
	CHECK VALVE - SWING GATE
	CHECK VALVE - SPRING
	PRESSURE REDUCING VALVE
	QUICK DISCONNECT VALVE (OPENING)
	QUICK DISCONNECT VALVE (CLOSING)
	LOCK SHIELD VALVE
	NEEDLE VALVE
	CIRCUIT SETTER (BALANCING VALVE)
	AUTOMATIC FLOW LIMITING VALVE
	TAMPER VALVE
	FLOAT VALVE
	TRIPLE DUTY VALVE
	COCK, DRAIN
	COCK, SHUT-OFF
	CURB VALVE
	SAFETY RELIEF VALVE
	BACKFLOW PREVENTER
	HOSE END DRAIN
	STRAINER Y-TYPE
	AIR VENT, AUTOMATIC
	AIR VENT, MANUAL
VB	VACUUM BREAKER
	FLEXIBLE CONNECTION (BRAIDED HOSE)
	FLEXIBLE CONNECTION (SPHERICAL RUBBER)
T	THERMOSTATIC RADIATOR
	THERMOWELL
M	FLOW METER
	TEST POINT
	PRESSURE GAUGE
	THERMOMETER
	STEAM TRAP
FS	FLOW OR PRESSURE SWITCH
	PUMP
	FLOW INDICATOR

ABBREVIATIONS

SYMBOL	DESCRIPTION
°F	DEGREE FARENHEIT
Ø	DIAMETER OR PHASE
AAV	AUTOMATIC AIR VENT
AD	ACCESS DOOR
AFF	ABOVE FINISHED FLOOR
AHU	AIR HANDLING UNIT
AP	ACCESS PANEL
AS	AIR SEPARATOR
B	BOILER
BAS	BUILDING AUTOMATION SYSTEM
BDD	BACKDRAFT DAMPER
BHP	BRAKE HORSEPOWER
BTUH	BTU PER HOUR
CC	COOLING COIL
CD	CEILING DIFFUSER
CFM	CUBIC FEET PER MINUTE
CFP	CHEMICAL FEED PUMP
CG	CEILING GRILL
CH	CHILLER
CHW	CHILLED WATER
CHWR	CHILLED WATER RETURN
CHWS	CHILLED WATER SUPPLY
CLG	CEILING
CO	CARBON MONOXIDE
CO2	CARBON DIOXIDE
COND	CONDENSATE
CONDR	CONDENSOR
CONN	CONNECTION
COP	COEFFICIENT OF PERFORMANCE
CPF	CHEMICAL POT FEEDER
CU FT	CUBIC FEET
CU IN	CUBIC INCHES
DB	DRY BULB
DC	DRY AIR COOLER
DDC	DIRECT DIGITAL CONTROL
DEGF	DEGREE FAHRENHEIT
DEMO	DEMOLITION
DET	DETAIL
DG	DOOR GRILLE
DH	DOMESTIC WATER HEATER
DHW	DOMESTIC HOT WATER
DIA	DIAMETER
DIM	DIMENSION
DLV	DOOR LOUVER
DMPR	DAMPER
DP	DEWPOINT
DPS	DIFFERENTIAL PRESSURE SENSOR
DR	DRAIN
DS	DISCONNECT SWITCH
DT	DRAW THROUGH
DW	DOMESTIC WATER
DWG	DRAWING
(E)	EXISTING
EA	EXHAUST AIR
EA	EACH
EAD	EXHAUST AIR DAMPER
EAT	ENTERING AIR TEMPERATURE
ED	EXHAUST DIFFUSER
EDB	ENTERING DRY BULB TEMPERATURE
EER	ENERGY EFFICIENCY RATIO
EF	EXHAUST FAN
EFF	EFFICIENCY
EG	EXHAUST GRILLE
EJ	EXPANSION JOINT
ELEC	ELECTRICAL
ENT	ENTERING
EQ	EQUAL
ER	EXHAUST REGISTER
ESP	EXTERNAL STATIC PRESSURE
ET	EXPANSION TANK
EWBT	ENTERING WET BULB TEMPERATURE
EWT	ENTERING WATER TEMPERATURE
EXP	EXPANSION
EXT	EXTERIOR
F	FAN
F/O	FLAT OVAL
FA	FROM ABOVE
FAI	FRESH AIR INTAKE
FB	FROM BELOW
FCU	FAN COIL UNIT
FCV	FLOW CONTROL VALVE
FD	FIRE DAMPER
FDR	FLOOR DRAIN
FF	FINAL FILTER
FLA	FULL LOAD AMP
FMD	FLOW MEASURING DEVICE
FPM	FEET PER MINUTE
FPT	FAN POWERED TERMINAL
FSD	COMBINATION FIRE/SMOKE DAMPER
FSS	FLOW SENSING SWITCH
FT	FEET
GA	GAUGE
GAL	GALLON
GALV	GALVANIZED
GPM	GALLON PER MINUTE
GRL	GRILLE

ABBREVIATIONS

SYMBOL	DESCRIPTION
GSNK	GOOSENECK
H	HUMIDITY
HC	HEATING COIL
HFD	HORIZONTAL FIRE DAMPER
HHW	HEATING HOT WATER
HHWR	HEATING HOT WATER RETURN
HHWS	HEATING HOT WATER SUPPLY
HORIZ	HORIZONTAL
HP	HORSEPOWER
HTG	HEATING
HZ	HERTZ
IN	INCHES
KW	KILOWATT
(L1)	1 ACOUSTICAL DUCT LINING
(L2)	2 ACOUSTICAL DUCT LINING
L	LINED DUCTWORK
LAT	LEAVING AIR TEMPERATURE
LB	POUND
LD	LINEAR DIFFUSER
LDB	LEAVING DRY BULB TEMPERATURE
LWBT	LEAVING WET BULB TEMPERATURE
LWT	LEAVING WATER TEMPERATURE
MAT	MIXED AIR TEMPERATURE
MAX	MAXIMUM
MBH	THOUSAND BTUH
MBTU	THOUSAND BTU
MCA	MINIMUM CIRCUIT AMPACITY
MCC	MOTORIZED CONTROL CENTER
MD	MOTORIZED DAMPER
MECH	MECHANICAL
MEZZ	MEZZANINE
MIN	MINIMUM
MISC	MISCELLANEOUS
MV	MANUAL VENT
(N)	NEW
NA	NOT APPLICABLE
NC	NORMALLY CLOSED
NFA	NET FREE AREA
NO	NORMALLY OPEN
NTS	NOT TO SCALE
OA	OUTSIDE AIR
OAD	OUTSIDE AIR DAMPER
OBD	OPPOSED BLADE DAMPER
OC	ON CENTER
OD	OUTSIDE DIAMETER
OPNG	OPENING
P	PUMP
PD	PRESSURE DROP
PERF	PERFORATED
PF	PRE-FILTER
PG	PRESSURE GAUGE
PH	PHASE
POC	POINT OF CONNECTION
PRV	PRESSURE REDUCING VALVE
PSI	POUNDS PER SQUARE INCH
PSIA	POUNDS PER SQUARE INCH (ABS)
PSIG	POUNDS PER SQUARE INCH (GAUGE)
RA	RETURN AIR
RAD	RETURN AIR DAMPER
RD	RETURN DIFFUSER
REF	REFRIGERANT
RG	RETURN GRILL
RH	RELATIVE HUMIDITY
RHG	REFRIGERANT HOT GAS
RL	REFRIGERANT LIQUID LINE
RPM	REVOLUTIONS PER MINUTE
RR	RETURN REGISTER
SA	SUPPLY AIR
SD	SMOKE DAMPER
SEER	SEASONAL ENERGY EFFICIENCY RATIO
SF	SUPPLY FAN
SG	SUPPLY GRILLE
SP	STATIC PRESSURE
SQ FT	SQUARE FEET
SR	SUPPLY REGISTER
SS	STAINLESS STEEL
STRUCT	STRUCTURAL
T	TEMPERATURE
TA	TRANSFER AIR
TA	TO LEVEL ABOVE
TB	TO LEVEL BELOW
TG	TRANSFER GRILLE
TYP	TYPICAL
VAV	VARIABLE AIR VOLUME
VD	VOLUME DAMPER
VFD	VARIABLE FREQUENCY DRIVE/CONTROLLER
W/O	WITHOUT
WB	WET BULB
WC	WATER COLUMN
WG	WALL GRILLE
WMS	WIRE MESH SCREEN
WT	WEIGHT

MECHANICAL DRAWING LIST

DWG NO.	DRAWING TITLE
M000	MECHANICAL NOTES, SYMBOLS, & ABBREVIATIONS
M010	MECHANICAL SCHEDULES
M011	MECHANICAL SCHEDULES
M201	MECHANICAL GROUND FLOOR PLAN - OVERALL
M201A	MECHANICAL LEARNING CENTER GROUND FLOOR PLAN - SOUTH
M201B	MECHANICAL LEARNING CENTER GROUND FLOOR PLAN - NORTH
M201C	MECHANICAL BOXCAR GROUND FLOOR PLAN
M202	MECHANICAL MEZZANINE FLOOR PLAN - OVERALL
M202A	MECHANICAL LEARNING CENTER MEZZ FLOOR PLAN - SOUTH
M221	MECHANICAL ROOF LEVEL PLAN - OVERALL
M221A	MECHANICAL LEARNING CENTER ROOF LEVEL PLAN - SOUTH
M221B	MECHANICAL LEARNING CENTER ROOF LEVEL PLAN - NORTH
M221C	MECHANICAL BOXCAR ROOF LEVEL PLAN
MP201	MECHANICAL GROUND FLOOR PIPING PLAN
MP202	MECHANICAL MEZZANINE LEVEL PIPING PLAN
MP221	MECHANICAL ROOF LEVEL PIPING PLAN
M401	MECHANICAL ENLARGED PLANS

GENERAL NOTES:

1. THE ENTIRE INSTALLATION SHALL CONFORM TO THE REQUIREMENTS OF THE 2019 CALIFORNIA MECHANICAL CODE WITH CITY OF LOS ANGELES AMENDMENTS, 2019 CALIFORNIA BUILDING CODE WITH CITY OF LOS ANGELES AMENDMENTS, AND OTHER APPLICABLE CODES AND REGULATIONS, INCLUDING 2019 CALIFORNIA ENERGY EFFICIENCY STANDARDS (TITLE 24 , PART 6), AND CAL-GREEN REQUIREMENTS WITH LA CITY AMENDMENTS.
2. EXACT LOCATIONS OF ALL CEILING DIFFUSERS, REGISTERS AND GRILLES ARE DETAILED ON THE ARCHITECTURAL REFLECTIED CEILING PLANS AND ARCHITECTURAL ROOM ELEVATIONS.
3. PADS AND FLASHING FOR MECHANICAL EQUIPMENT SHALL BE AS INDICATED ON THE STRUCTURAL AND ARCHITECTURAL PLANS. COORDINATE EXACT SIZES OF REQUIRED PADS AND OPENINGS WITH EQUIPMENT SUPPLIER. SEE STRUCTURAL DRAWINGS FOR OPENING AND EQUIPMENT PAD REINFORCEMENT DETAILS.
4. PROVIDE SEISMIC ANCHORAGE AND VIBRATION ISOLATION SUPPORT TO ALL EQUIPMENT, DUCTWORK AND PIPING. SUBMIT CALCULATIONS FOR EQUIPMENT SUPPORTS, ANCHORAGE, AND VIBRATION ISOLATORS THAT ARE PREPARED, SIGNED AND STAMPED BY A REGISTERED CALIFORNIA P.E.
5. EQUIPMENT SHALL BE INSTALLED IN STRICT ACCORDANCE WITH THE EQUIPMENT MANUFACTURER'S RECOMMENDATIONS. PROVIDE ALL FITTINGS, TRANSITIONS, DAMPERS, VALVES, AND OTHER DEVICES REQUIRED FOR A COMPLETE WORKABLE INSTALLATION.
6. DUCTWORK SHALL BE CONSTRUCTED, ERECTED, AND TESTED IN ACCORDANCE WITH THE MOST RESTRICTIVE OF LOCAL REGULATIONS, PROCEDURES DETAILED IN THE ASHRAE HANDBOOK OF FUNDAMENTALS, OR THE APPLICABLE STANDARDS ADOPTED BY THE SHEET METAL AND AIR CONDITIONING CONTRACTORS NATIONAL ASSOCIATION (SMACNA). REFER TO SPEC 233100 & 23 05 93 FOR DUCT AIR LEAKAGE TEST REQUIREMENT.
7. EQUIPMENT, DUCTS, PIPING, AND OTHER DEVICES AND MATERIALS INSTALLED OUTSIDE OF THE BUILDING OR OTHERWISE EXPOSED TO THE WEATHER SHALL BE DESIGNED FOR OUTDOOR INSTALLATION AND COMPLETELY WEATHERPROOFED.
8. DUCTWORK SHALL BE INSULATED OR LINED PER SPECIFICATIONS OR AS NOTED ON DRAWINGS. SUPPLY DUCT SIZES ARE CLEAR INTERNAL SIZES FOR THE AIRFLOW. WHEN LINED DUCT IS USED, THE SHEET METAL SIZE SHALL BE INCREASED ACCORDINGLY TO ACCOMODATE STATED LININGTHICKNESS. RETURN/TRANSFER DUCT SIZES INDICATE OUTSIDE DIAMETER SIZES FOR THE AIRFLOW AND INCREASING DUCT SIZE IS NOT NEEDED. DUCT JOINTS AND SEAMS SHALL BE SEALED PER SPECIFICATIONS.
9. MANUAL DAMPERS SHALL BE PROVIDED IN ALL DUCT BRANCHES TO INDIVIDUAL DIFFUSERS, GRILLES, REGISTERS, AND BELLMOUTH CONNECTIONS NO MATTER WHETHER IT IS INDICATED OR NOT.
10. TURNING VANES SHALL BE PROVIDED FOR ALL ELBOWS FOR SUPPLY RETURN AND ALL GENERAL EXHAUST. REFER TO DIVISION 23 SPECIFICATION FOR FULL TURNING VANE AND RADIUS ELBOW REQUIREMENTS.
11. PENETRATIONS OF PIPES, CONDUITS, IN WALLS REQUIRING PROTECTED OPENINGS SHALL BE FIRE STOPPED. FIRE STOP MATERIAL SHALL BE A TESTED ASSEMBLY APPROVED BY THE LOCAL FIRE MARSHAL. REFER TO FIRE LIFE SAFETY DRAWINGS FOR LOCATION AND RATING OF ALL FIRE AND SMOKE RATED WALLS.
12. CONTRACTOR SHALL PROVIDE DETAILED SHOP DRAWINGS OF ALL DUCT ROUTING PRIOR TO INSTALLATION. SHOP DRAWINGS SHALL BE FULLY COORDINATED WITH ALL TRADES AND SHALL BE ISSUED ONLY AFTER ALL TRADES HAVE SIGNED OFF.
13. ALL MECHANICAL COOLING EQUIPMENT LOCATED IN ELECTRICAL ROOMS SHALL NOT BE LOCATED DIRECTLY ABOVE ELECTRICAL EQUIPMENT. MECHANICAL CONTRACTOR SHALL COORDINATE WITH ELECTRICAL DRAWINGS AND CONTRACTOR. ANY PIPING LOCATED WITHIN ELECTRICAL ROOMS SHALL NOT RUN ABOVE ELECTRICAL EQUIPMENT. SHOULD PIPE ROUTING BE REQUIRED OVER EQUIPMENT, COORDINATE WITH ELECTRICAL ENGINEER AND PLACE PIPING ABOVE CONTAINMENT PAN OR PLACED WITHIN DOUBLE WALL PIPING.
14. ALL MATERIALS PASSING THOUGH AIR PLENUMS SHALL BE PLENUM RATED, WITH FLAME SPREAD <25 AND SMOKE DEVELOPED <50 RATINGS.
15. MECHANICAL CONTRACTOR TO COORDINATE WITH GENERAL CONTRACTOR TO ENSURE THAT ACCESS PANELS ARE IN HARD LID CEILINGS FOR ACCESS TO VAV BOXES, VALVES, DAMPERS, AND ALL OTHER EQUIPMENT REQUIRING ACCESS. CONTRACTOR TO COORDINATE ACCESS PANEL LOCATIONS WITH ARCHITECT. PROVIDE YOUNG'S REGULATOR TO VOLUME DAMPERS LOCATED ABOVE INACCESSIBLE CEILINGS.
16. THERMOSTATS AND TEMPERATURE SENSORS SHALL BE PROVIDED FOR ALL VAV BOXES. TEMPERATURE SENSORS SHALL BE PLACED IN ALL COMMON CIRCULATION AREAS SERVED BY VAV BOXES. ADJUSTABLE THERMOSTATS SHALL BE PROVIDED IN PRIVATE OFFICE, CONFERENCE ROOMS, ETC. ADJUSTABLE THERMOSTATS' LOCATION SHALL COMPLY WITH CALIFORNIA ADA CODE AND ARCHITECTS DRAWINGS.
17. ANY PENETRATION OF A RATED ASSEMBLY SHALL BE FIRE STOPPED USING APPROVED MATERIALS AND SHALL HAVE AN F AND T RATING AS DETERMINED BY TESTS CONDUCTED IN ACCORDANCE WITH CBC STANDARD AND APPROVED BY STATE FIRE MARSHALL.
18. PROVIDE PLENUMS AS INDICATED ON PLANS. PLENUMS SHALL BE SIZED TO ACCOMMODATE THE LOUVER, DUCT AND GRILLE CONNECTION TO THE PLENUM. PROVIDE ½" METAL SCREEN ON EXTERIOR LOUVER.
19. PROVIDE FIRE SMOKE DAMPERS AT ALL DUCTS PENETRATING RATED WALLS AND FLOORS. FIRE SMOKE DAMPERS SHALL BE INSTALLED PER MANUFACTURERS INSTALLATION INSTRUCTIONS. INSTALL DUCT MOUNTED SMOKE DETECTOR WITHIN 5 FT OF THE DAMPER WITH NO AIR OUTLETS OR INLETS BETWEEN THE DETECTOR AND THE DAMPER.
20. EACH PIECE OF EQUIPMENT COMPRISING PART OF THE MECHANICAL SYSTEM SHALL BE CHECKED FOR PROPER LUBRICATION, DRIVE ROTATION, BELT TENSION, PROPER CONTROL SEQUENCE AND ANY OTHER CONDITION WHICH MAY CAUSE IMPROPER EQUIPMENT OPERATION, DAMAGE TO EQUIPMENT OR ENDANGER PERSONNEL.
21. PROVIDE AND MAINTAIN ACCESS AND WORKING SPACE AROUND MECHANICAL, ELECTRICAL AND CONTROL EQUIPMENT TO PERMIT READY AND SAFE OPERATION, EXAMINATION AND MAINTENANCE.
22. ALL SPACE CONDITIONING AND VENTILATION SYSTEM SHALL BE BALANCED TO THE QUANTITIES SPECIFIED IN THE PLAN, IN ACCORDANCE WITH THE ASSOCIATION AIR BALANCE COUNCIL (AABC) OR NATIONAL ENVIRONMENTAL BALANCE BUREAU (NEBB) STANDARDS.
23. OUTSIDE AIR SHALL NOT BE TAKEN LESS THAN 10 FEET IN DISTANCE FROM AN APPLIANCE VENT OULET, A VENT OPENING OF A PLUMBING DRAINAGE SYSTEM, OR THE DISCHARGE OUTLET OF AN EXHAUST FAN, NOR LESS THAN 10 FEET ABOVE THE SURFACE OF AN ABUTTING PUBLIC WAY, SIDEWALK, STREET, ALLEY, OR DRIVEWAY.
24. TESTING AND ADJUSTMENT IS REQUIRED FOR ALL NEW INSTALLATION OF ANY OF HEATING VENTILLATION AND AIR CONDITIONING SYSTEM. THE HVAC SYSTEM AND COMPONENTS WILL BE TESTED, ADJUSTED AND BALANCED IN ACCORDANCE WITH THE ASSOCIATED AIR BALANCE COUNCIL NATIONAL STANDARDS FOR TOTAL SYSTEM BALANCE (6TH EDITION). REFER TO SPECIFICATION 23 05 93.
25. A FINAL REPORT FOR THE TESTING AND ADJUSTING OF ALL NEW SYSTEMS SHALL BE COMPLETED PRIOR TO FINAL APPROVAL BY THE FIELD INSPECTOR. THIS REPORT SHALL BE SIGNED BY THE INDIVIDUAL RESPONSIBLE FOR PERFORMING THESE SERVICES.
26. AN OPERATION & SYSTEMS MANUAL, SHALL BE PROVIDED TO THE OWNER OR REPRESENTATIVE AND TO THE FIELD INSPECTOR AT THE TIME OF FINAL INSPECTION.
27. IF THE NEW HVAC SYSTEM IS USED DURING CONSTRUCTION, USE RETURN AIR FILTER WITH A MERV OF 8. REPLACE ALL FILTERS IMMEDIATELY PRIOR TO OCCUPANCY.
28. ALL DUCT AND OTHER RELATED AIR DISTRIBUTION COMPONENT OPENINGS SHALL BE COVERED WITH TAPE, PLASTIC, OR SHEET METAL UNTIL THE FINAL STARTUP OF THE HEATING, COOLING AND VENTILATING EQUIPMENT.
29. AN AIR FILTER WITH A MINIMUM EFFICIENCY REPORTING VALUE (MERV) OF 8 OR HIGHER SHALL BE INSTALLED IN THE MECHANICAL SYSTEM FOR OUTSIDE AND RETURN AIR PRIOR TO OCCUPANCY.
30. MECHANICALLY VENTILATED BUILDINGS WITHIN 1,000 FEET OF A FREEWAY SHALL PROVIDE REGULARLY OCCUPIED AREAS OF THE BUILDING WITH A MERV 13 FILTER FOR OUTSIDE AND RETURN AIR. FILTERS SHALL BE INSTALLED PRIOR TO OCCUPANCY AND RECOMMENDATIONS FOR MAINTENANCE WITH FILTERS OF THE SAME VALUE SHALL BE INCLUDED IN THE OPERATION AND MAINTENACE MANUAL.
31. THE BUILDING SHALL MEET OR EXCEED THE PROVISIONS FOR MECHANICAL VENTILATION OF SECTION 1203 OF LOS ANGELES BUILDING CODE.
32. ADDITIONS TO BUILDINGS THAT USE DEMAND CONTROL VENTILLATION SHALL HAVE CO2 SENSORS AND VENTILATION CONTROLS INSTALLED IN ACCORDANCE WTH THE REQUIREMENTS OF THE CURRENT EDITION OF THE CALIFORNIA ENERGY CODE, CCR, TITLE 24, PART 6, SECTION 121(C).
33. THE USE OF FLEXIBLE DUCT IS LIMITED TO 5' LENGTHS OR LESS PER CODE.
34. SMOKE DUCT TESTING SHOULD BE PERFORMED DURING DUCT AIR LEAKAGE TESTING TO FACILITATE ANY CORRECTION.

NOT FOR CONSTRUCTION

09.AUG.2021

ba
belzberg architects
2321 MAIN STREET
SANTA MONICA, CA 90405
310.453.9611
www.belzbergarchitects.com

ARUP
Arup North America Ltd.
900 Wilshire Boulevard,
19th Floor
Los Angeles CA 90017
Tel: 310 578 4400
www.arup.com

#	DESCRIPTION	DATE

HOLOCAUST MUSEUM LA EXPANSION

100 THE GROVE DRIVE
LOS ANGELES, CA 90036

MECHANICAL NOTES, SYMBOLS, & ABBREVIATIONS

PROJECT NUMBER: 17009

M000

08/09/21 19:12:21

PACKAGE UNIT SCHEDULE

ITEM	MANUFACTURER & MODEL NO.	LOCATION	AREA SERVED	AMBIENT DB°f	OSA CFM	TOTAL CFM	SUPPLY FAN						RETURN FAN							CONDENSER FAN	
							QTY #	TOTAL S.P. IN W.C.	EXT S.P. IN W.C.	TOTAL BHP	TOTAL HP	VFD PER FAN	CFM	QTY #	TOTAL S.P. IN W.C.	EXT S.P. IN W.C.	TOTAL BHP	TOTAL HP	VFD PER FAN	QTY #	HP
PAC-1	ALLIANCE+ SAMSUNG	MECHANICAL YARD	SOUTH BUILDING	110	10,000	18,300	2	4.3	2.0	19.4	30	Y	18,300	2	1.5	1	11.9	15	Y	4	2x25+2x20(4CIRCUITS)
PAC-2	ALLIANCE+SAMSUNG	ROOF OF EXISTING BUIDLING	BOX CAR PAVILION	110	2,400	8,000	1	3.8	2.0	6.7	7.5	Y	8,000	1	1.5	1	3.85	5	Y	2	2x10+2x8(4CIRCUITS)

PACKAGE UNIT SCHEDULE-CONTINUED

ITEM	COOLING COIL-DX												HEATING COIL-DX						HEATING COIL									ELECTRICAL DATA (COMBINED POC)					PRE FILTER			FINAL FILTER				EMERGENCY POWER	NOTES
	CFM	EER	IEER	REFRIGERANT TYPE	COIL PERFORMANCE TOTAL CAP MBH	COIL PERFORMANCE SENS CAP MBH	AIR MAX VEL FPM	AIR ENT DB °F	AIR ENT WB °F	AIR LVG DB °F	AIR LVG WB °F	CFM	COP	REFRIGERANT TYPE	COIL PERFORMANCE TOTAL CAP MBH	AIR MAX VEL FPM	AIR ENT DB °F	AIR LVG DB °F	CFM	COMBINED COIL PERFORMANCE TOTAL CAP MBH	AIR MAX VEL FPM	AIR ENT DB °F	AIR LVG DB °F	AIR ENT TEMP °F	AIR LVG TEMP °F	GPM	VOLT	PH	HZ	MCA	MOCP	MAX. FACE VEL. FPM	MERV RATING	EFF. %	MAX. FACE VEL. FPM	MERV RATING	EFF. %		
PAC-1	18,300	9.50	10.30	R-410a	617.0	606.0	450	82.0	63.0	53	52	-	-	-	-	-	-	-	10,000	162.0	-	40	55	140	100	8	460	3	60	229.2	263	500	MERV 8	35%	450	MERV 14 DPx95 Dual-Stage Carbon Filter	95%	N	1-10
PAC-2	8,000	10.60	11.00	R-410a	192.0	184.0	450	82.0	63.0	53	52	2,400	3.2	R-410a	118.0	450	40	85	-	-	-	-	-	-	-		460	3	60	65.1	83	500	MERV 8	35%	450	MERV 14 DPx95 Dual-Stage Carbon Filter	95%	N	1-9

NOTES:

1. PROVIDE HARD-WIRED SHUTDOWN BY DUCT DETECTOR IN SUPPLY DUCT AND RETURN DUCT THROUGH FIRE ALARM SYSTEM.
2. ADD SEPARATE POC FOR LIGHTS AND RECEPTACLES.
3. UNITS SHALL BE INTERNALLY ISOLATED.
4. PROVIDE UNIT-MOUNTED EXTERIOR SERVICE LIGHT WITH INDEPENDENT SWITCH FOR OUTDOOR UNITS.
5. PROVIDE ACOUSTICAL LOUVER ON INTAKE OPENINGS AND EXHAUST OPENINGS TO EXTERIOR.
6. PROVIDE MINIMUM OUTSIDE AIR DAMPER.
7. PROVIDE MODULATING ECONOMIZER DAMPER.
8. PROVIDE AIRFLOW MEASURING STATIONS ON MINIMUM OUTSIDE AIR INLET TO UNIT.
9. RATED FOR OUTDOOR INSTALLATION.
10. PROVIDE SPERATE DISCONNECT SWITCH FOR PAC AND EACH HP.

PACKAGE UNIT SOUND SCHEDULE

ITEM	SUPPLY/OUTLET SOUND POWER LEVEL (DB RE 10E-12 WATTS)								RETURN/INLET SOUND POWER LEVEL (DB RE 10E-12 WATTS)								OUTDOOR AIR/ INLET SOUND POWER LEVEL (DB RE 10E-12 WATTS)								EXHAUST/OUTLET SOUND POWER LEVEL (DB RE 10E-12 WATTS)								CASING RADIATED SOUND POWER LEVEL (DB RE 10E-12 WATTS)							
	63 Hz	125 Hz	250 Hz	500 Hz	1 kHz	2 kHz	4 kHz	8 kHz	63 Hz	125 Hz	250 Hz	500 Hz	1 kHz	2 kHz	4 kHz	8 kHz	63 Hz	125 Hz	250 Hz	500 Hz	1 kHz	2 kHz	4 kHz	8 kHz	63 Hz	125 Hz	250 Hz	500 Hz	1 kHz	2 kHz	4 kHz	8 kHz	63 Hz	125 Hz	250 Hz	500 Hz	1 kHz	2 kHz	4 kHz	8 kHz
PAC-1	86	84	93	91	86	83	79	72	82	85	88	83	76	74	71	64	85	83	91	88	78	75	73	67	82	83	86	84	79	76	74	69	79	73	70	64	55	48	44	36
PAC-2	82	80	82	85	81	80	79	74	76	75	76	79	67	68	69	65	76	75	76	79	67	68	69	65	-	-	-	-	-	-	-	-	74	68	57	55	47	42	41	36

EXHAUST FAN SCHEDULE

ITEM	MANUFACTURER & MODEL NO.	LOCATION	AREA SERVED	TYPE	NORMAL CFM	E.S.P. IN W.G.	FRPM	MOTOR DATA BHP	HP	VOLT	PH	HZ	VFD	VIBRATION ISOLATION MOUNT TYPE	MIN. STATIC DEFL. IN	SOUND DATA CASE RADIATED SOUND POWER LEVEL, dB re 10E-12 Watts 63 Hz	125 Hz	250 Hz	500 Hz	1 kHz	2 kHz	4 kHz	8 kHz	SOUND DATA INLET SOUND POWER LEVEL, dB re 10E-12 Watts 63 Hz	125 Hz	250 Hz	500 Hz	1 kHz	2 kHz	4 kHz	8 kHz	OPERATING WEIGHT LBS	EMERGENCY POWER	NOTES
EF-01	GREENHECK, SQ-98-VG	CLASSROOM A	CLASSROOM A	INLINE	520	1.00	1,981	0.32	0.75	208	1	60	N	SH	1	80	88	72	77	66	59	59	63	79	86	78	83	71	65	65	63	60	NO	1
EF-02	GREENHECK, SQ-98-VG	CLASSROOM A	GRN	INLINE	310	0.60	1,397	0.11	0.25	208	1	60	N	SH	1	80	83	63	61	54	49	46	43	79	81	69	67	59	55	52	47	50	NO	1
EF-03	GREENHECK, SQ-130HP-VG	M RESTROOM	RESTROOMS	INLINE	1,170	1.00	1,509	0.39	1.00	208	1	60	N	SH	1	89	75	73	66	60	49	46	43	86	74	77	72	68	64	64	59	100	NO	1

NOTES:

1. PROVIDE WITH BACKDRAFT DAMPER

BOILER SCHEDULE

ITEM	MANUFACTURER & MODEL NO.	LOCATION	FUEL TYPE	INPUT MBW	MAX. OUTPUT MBH	MIN. EFF. %	MAX. NOX. EMISS. PPM	MIN GPM	DESIGN GPM	ENT TEMP °F	LVG TEMP °F	PRESSURE DROP FT HD	ELECTRICAL DATA FLA	VOLT	PH	HZ	OPERATING WEIGHT LBS	EMERGENCY POWER	NOTES
B-01	AERCO BMK 750	BOILER SKID	NATURAL GAS	750	720	95.6%	9	12	40	100	140	7.0	13	120	1	60	803	NO	1-3

NOTES:

1. SELECT UNIT FOR LOW NOX AND LOW CO TO COMPLY WITH MOST CURRENT SCAQMD RULES. BOILER TO BE SOURCE TESTED BY THIRD PARTY.
2. PROVIDE CONDENSATE NEUTRALIZATION KIT INCLUDING MULTIPLE BOILER CONDENSATE TRAP, PH NEUTRALIZATION KIT, AND NEUTRALIZING MEDIA.
3. PROVIDE GAS PRESSURE REGULATOR AND TRAIN.

PUMP SCHEDULE

ITEM	MANUFACTURER & MODEL NO.	LOCATION	SERVED	TYPE	DESIGN FLOW GPM	MIN FLOW GPM	TOTAL HEAD FT WG.	PUMP RPM	DUTY PT EFFIC %	NPSHR FT WG.	MOTOR DATA DUTY PT BHP	HP	VOLT	PH	HZ	VIBRATION ISOLATION MOUNT TYPE	MIN. STATIC DEFL. IN	BASE TYPE	VFD	OPERATING WEIGHT LBS	EMERGENCY POWER	NOTES
P-1	GRUNDFOS LCS 15951	BOILER SKID	HEATING HOT WATER	SPLIT COUPLED END SUCTION PUMP	40		70	1765	48%	3	1.5	3.0	208	3	60	MSL	1	CIB	YES	206	NO	-

CHEMICAL POT FEEDER SCHEDULE

ITEM	MANUFACTURER & MODEL NO.	LOCATION	SERVICE	CAPACITY GALLONS	OPERATING WEIGHT LBS	NOTES
CPF-01	AMERICAN WHEATLEY BFT-002-O	BOILER SKID	HEATING HOT WATER	2	35	-

NOT FOR CONSTRUCTION

09.AUG.2021

belzberg architects
2321 MAIN STREET
SANTA MONICA, CA 90405
310.453.9611
www.belzbergarchitects.com

ARUP
Arup North America Ltd.
900 Wilshire Boulevard,
19th Floor
Los Angeles CA 90017
Tel: 310 578 4400
www.arup.com

#	DESCRIPTION	DATE

HOLOCAUST MUSEUM LA EXPANSION

100 THE GROVE DRIVE
LOS ANGELES, CA 90036

MECHANICAL SCHEDULES

PROJECT NUMBER: 17009

M010

09/09/21 19:12:23

FAN COIL UNIT SCHEDULE (INDOOR UNIT)

ITEM	MANUFACTURER & MODEL NO	ASSOCIATED OUTDOOR UNIT	LOCATION	AREA SERVED	TYPE	SUPPLY CFM	EXT S.P. IN W.C.	COOLING					ELECTRICAL DATA					FILTERS	VIBRATION ISOLATION		SOUND DATA								OPERATING WEIGHT LBS	EMERGENCY POWER	NOTES
								TOTAL CAP MBH	SENS CAP MBH	AIR ENT DB °F	AIR ENT WB °F	AIR LVG DB °F	AIR LVG WB °F	VOLT	PH	HZ	MCA	MOCP	MERV RATING	MOUNT TYPE	MIN STATIC DEFL. IN	SUPPLY/OUTLET SOUND POWER LEVEL, dB re 10E-12 Watts 63 Hz	125 Hz	250 Hz	500 Hz	1 kHz	2 kHz	4 kHz	8 kHz			
FCU 01	FXMQ72MVJU	CU 01	PROJECTOR CONTROL ROOM	PROJECTOR CONTROL ROOM	MED STATIC DUCTED	2050	0.5	52.3	49.6	78	67	55	53	208	1	60	9.0	15.0	13	HS	1	73	68	64	60	57	51	46	40	310	NO	2
FCU 02	FXMQ36PBVJU	CU 02	ELECTRICAL 137	ELECTRICAL 137	MED STATIC DUCTED	1130	0.5	25.9	25.2	78	67	55	53	208	1	60	2.9	15.0	13	HS	1	64	62	58	55	57	50	46	40	105	NO	2
FCU 03	FXMQ36PBVJU	CU 02	IT EQUIPMENT ROOM	IT EQUIPMENT ROOM	MED STATIC DUCTED	1130	0.5	36	27	78	67	55	53	208	1	60	2.9	15.0	13	HS	1	64	62	58	55	57	50	46	40	105	NO	1
FCU 04	FXMQ18PBVJU	CU 03	RECEPTION	RECEPTION	CASSETTE	750	0.5	17.5	15.6	78	67	55	53	208	1	60	0.6	15.0	13	HS	1	68	68	61	54	56	50	46	40	55	NO	1
FCU 05	FXFQ36TVJU	CU 03	SECURITY	SECURITY	CASSETTE	1165	-	36	27.6	78	67	55	53	208	1	60	1.5	15.0	13	HS	1	67	69	63	59	61	55	52	48	60	NO	1
FCU 06	FXFQ36TVJU	CU 03	SECURITY	SECURITY	CASSETTE	1165	-	36	27.6	78	67	55	53	208	1	60	1.5	15.0	13	HS	1	67	69	63	59	61	55	52	48	60	NO	1
FCU 07	FXFQ36TVJU	CU 03	SECURITY	SECURITY	CASSETTE	1165	-	36	27.6	78	67	55	53	208	1	60	1.5	15.0	13	HS	1	67	69	63	59	61	55	52	48	60	NO	1

NOTES:

1. PROVIDE WITH CONDENSATE PUMP.
2. PROVIDE WITH SECONDARY DRAIN PAN.

CONDENSING UNIT SCHEDULE (OUTDOOR UNIT)

ITEM	MANUFACTURER & MODEL NO	ASSOCIATED FCU	LOCATION	AREA SERVED	REFRIGERANT TYPE	COOLING DATA CAP MBH	COOLING DATA AMBIENT OUTDOOR TEMP DB °F	HEATING DATA CAP MBH	HEATING DATA AMBIENT OUTDOOR TEMP DB °F	ELECTRICAL VOLT	PH	HZ	MOCP	MCA	DIMENSIONS WIDTH IN	DIMENSIONS HEIGHT IN	DIMENSIONS DEPTH IN	VIBRATION ISOLATION MOUNT TYPE	VIBRATION ISOLATION MIN STATIC DEFL. IN	OPERATING WEIGHT LBS	EMERGENCY POWER	NOTES
CU-1	RXYQ72XAYDA	FCU 01	ROOF	PROJECTOR ROOM	R410A	71.6	110	68.5	32	208	3	60	20	12.3	36.7	66.7	30.2	MSL	1	455	NO	-
CU-2	RXYQ72XAYDA	FCU 02 TO FCU 03	ROOF	EQPM	R410A	71.6	110	68.5	32	208	3	60	20	12.3	36.7	66.7	30.2	MSL	1	455	NO	-
CU-3	REYQ120XAYDA	FCU 04 to FCU 07	ROOF	SECURITY	R410A	125.5	110	110	32	208	3	60	25	21.1	48.9	66.7	30.2	MSL	1	730	NO	-

VAV UNIT SCHEDULE

TAG	MANUFACTURER & MODEL NO.	LOCATION	AREA SERVED	ASSOCIATED AIR HANDLER	INLET SIZE IN	AIRFLOW MAX CFM	AIRFLOW MIN CFM	AIRFLOW HEATING CFM	HEATING COIL ROWS	HEATING COIL CAP MBH	HEATING COIL ENT AIR TEMP °F	HEATING COIL LVG AIR TEMP °F	HEATING COIL ENT WATER TEMP °F	HEATING COIL WATER TEMP °F	HEATING COIL GPM	PRESSURE DROP AIR IN W.C.	PRESSURE DROP WATER FT W.C.	SUPPLY/OUTLET SOUND POWER LEVEL, dB re 10E-10 Watts 125 Hz	250 Hz	500 Hz	1 kHz	2 kHz	4 kHz	CASING RADIATED SOUND POWER LEVEL, dB re 10E-10 Watts 125 Hz	250 Hz	500 Hz	1 kHz	2 kHz	4 kHz	OPERATING WEIGHT LBS	NOTES
VAV-01	TITUS DESV	CORRIDOR	CORRIDOR	PAC-1	06	330	100	100	2	3.24	55	85	140	100	0.14	0.59	0.01	70	64	55	49	42	39	56	50	40	35	30	25	20	-
VAV-02	TITUS DESV	CLASSROOM A	AUDITORIUM	PAC-1	16	1700	1500	1500	2	48.6	55	85	140	100	2.83	0.51	0.92	61	53	51	50	48	44	49	45	40	33	30	26	56	-
VAV-03	TITUS DESV	CLASSROOM A	AUDITORIUM	PAC-1	16	1700	1500	1500	2	48.6	55	85	140	100	2.83	0.51	0.92	61	53	51	50	48	44	49	45	40	33	30	26	56	-
VAV-04	TITUS DESV	CORRIDOR	CORRIDOR	PAC-1	08	500	170	170	2	5.508	55	85	140	100	0.25	0.51	0.01	67	58	49	47	43	38	52	44	35	31	26	21	24	-
CAV-05	TITUS DESV	CLASSROOM A	GRN RM	PAC-1	06	300	300	300	2	9.72	55	85	140	100	0.60	0.61	0.06	69	62	54	48	42	39	55	49	39	34	30	25	20	-
VAV-06	TITUS DESV	CLASSROOM A	CLASSROOM A	PAC-1	14	1500	1080	1080	2	34.992	55	85	140	100	1.92	0.47	0.43	62	54	52	48	47	43	51	44	38	32	27	27	48	-
VAV-07	TITUS DESV	CLASSROOM B	CLASSROOM B	PAC-1	10	700	500	500	2	16.2	55	85	140	100	0.90	0.52	0.21	64	57	47	46	44	40	52	44	37	29	23	23	30	-
VAV-08	TITUS DESV	CLASSROOM A	GALLERY	PAC-1	14	1900	680	680	2	22.032	55	85	140	100	1.02	0.34	0.14	61	52	53	48	46	42	51	44	39	32	28	28	48	-
VAV-09	TITUS DESV	CLASSROOM A	GALLERY	PAC-1	14	1900	680	680	2	22.032	55	85	140	100	1.02	0.34	0.14	61	52	53	48	46	42	51	44	39	32	28	28	48	-
VAV-10	TITUS DESV	CLASSROOM A	GALLERY	PAC-1	14	1900	680	680	2	22.032	55	85	140	100	1.02	0.34	0.14	61	52	53	48	46	42	51	44	39	32	28	28	48	-
VAV-11	TITUS DESV	OFFICE	OFFICE	PAC-1	06	120	65	65	2	2.106	55	85	140	100	0.08	0.72	0.00	58	50	42	38	36	35	45	38	28	25	24	23	20	-
VAV-12	TITUS DESV	CLASSROOM B	DIT	PAC-1	16	2200	900	900	2	29.16	55	85	140	100	1.37	0.39	0.25	61	53	52	50	47	43	50	45	40	35	32	28	56	-
CAV-13	TITUS DESV	RESTROOM (W)	RESTROOM	PAC-1	14	1210	1210	1210	2	39.204	55	85	140	100	2.29	0.55	0.59	61	54	50	48	46	43	50	44	37	30	26	26	48	-
VAV-14	TITUS DESV	GIFT SHOP	GIFT SHOP	PAC-1	14	1400	600	600	2	19.44	55	85	140	100	0.87	0.51	0.11	62	54	52	48	47	43	51	44	38	31	27	27	48	-
VAV-15	TITUS DESV	GIFT SHOP	GIFT SHOP	PAC-1	14	1400	600	600	2	19.44	55	85	140	100	0.87	0.51	0.11	62	54	52	48	47	43	51	44	38	31	27	27	48	-

DUCT SILENCER SCHEDULE

ITEM	UNIT SERVED	TYPE & MODEL	SYSTEM TYPE	DIMENSIONS LENGTH FT	DIMENSIONS WIDTH IN	DIMENSIONS HEIGHT IN	CFM	PRESSURE DROP IN W.C.	MINIMUM INSERTION LOSS IN Hz 63 Hz	125 Hz	250 Hz	500 Hz	1 kHz	2 kHz	4 kHz	8 kHz	OPERATING WEIGHT LBS	NOTES
DS-1	PAC-1	VIBRO ACOUSTICS RD-MV-F8	RETURN	3	28	24	3,400	0.27	7	11	17	18	21	15	15	13	70	1,2,3

GENERAL NOTES:

1. DUCT SILENCER CONSTRUCTION MUST BE STAINLESS STEEL IF ATTACHED TO STAINLESS STEEL DUCTWORK.
2. ALL DUCT SILENCERS SHALL HAVE ENCAPSULATED FILL.
3. PROVIDE 3 FT OF STRAIGHT DUCT RUN UPSTREAM AND DOWNSTREAM OF DUCT SILENCERS.

NOT FOR CONSTRUCTION

09.AUG.2021

belzberg architects
2321 MAIN STREET
SANTA MONICA, CA 90405
310.453.9611
www.belzbergarchitects.com

ARUP
Arup North America Ltd.
900 Wilshire Boulevard,
19th Floor
Los Angeles CA 90017
Tel: 310 578 4400
www.arup.com

#	DESCRIPTION	DATE

HOLOCAUST MUSEUM LA EXPANSION

100 THE GROVE DRIVE
LOS ANGELES, CA 90036

MECHANICAL SCHEDULES

PROJECT NUMBER: 17009

M011

08/09/21 19:12:27

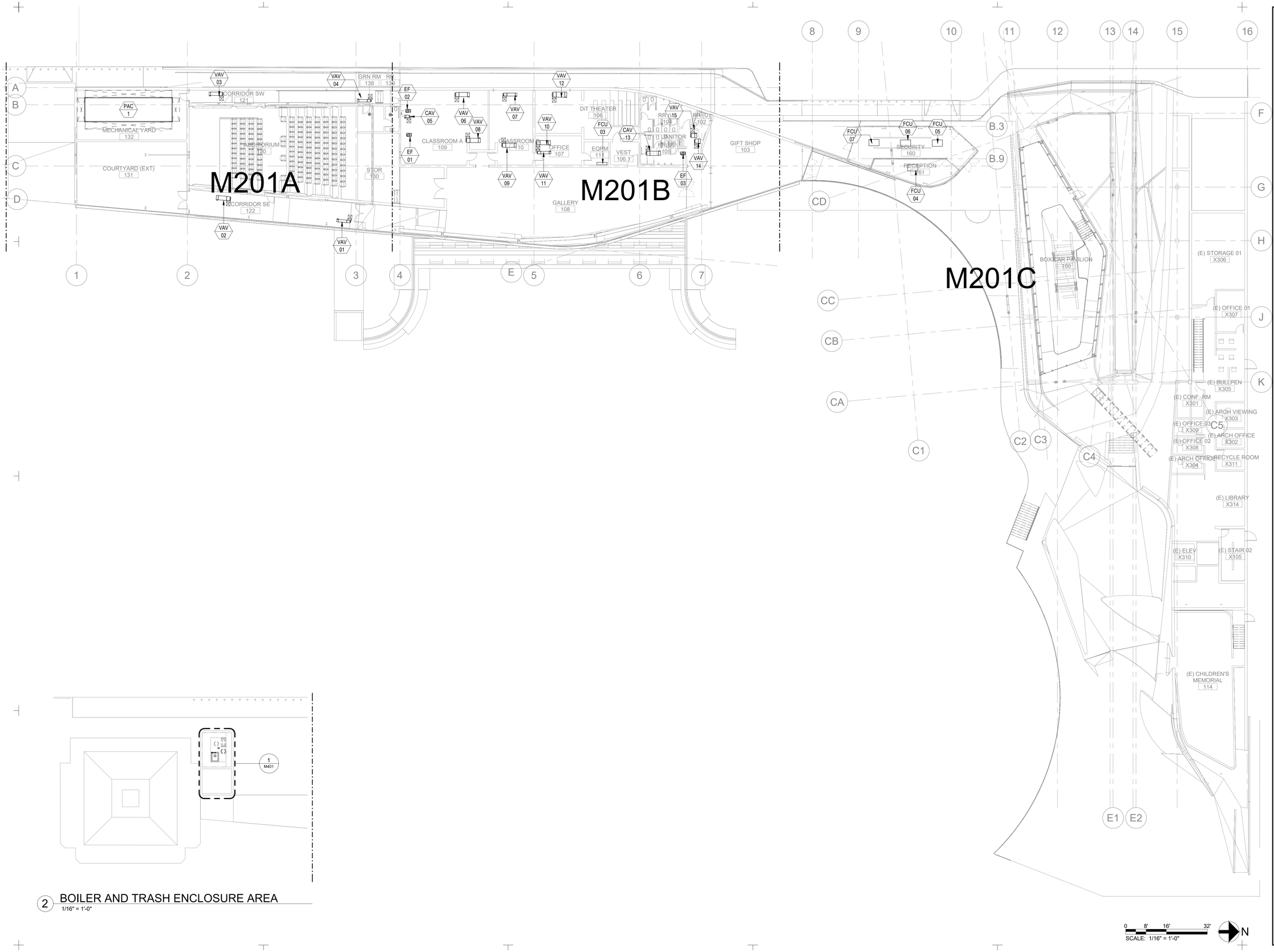

2 BOILER AND TRASH ENCLOSURE AREA
1/16" = 1'-0"

0 8' 16' 32'
SCALE: 1/16" = 1'-0"
N

NOT FOR CONSTRUCTION

09.AUG.2021

ba
belzberg architects
2321 MAIN STREET
SANTA MONICA, CA 90405
310.453.9611
www.belzbergarchitects.com

ARUP
Arup North America Ltd.
900 Wilshire Boulevard,
19th Floor
Los Angeles CA 90017
Tel: 310 578 4400
www.arup.com

#	DESCRIPTION	DATE

HOLOCAUST MUSEUM LA EXPANSION

100 THE GROVE DRIVE
LOS ANGELES, CA 90036

MECHANICAL GROUND FLOOR PLAN - OVERALL

PROJECT NUMBER: 17009

M201

08/09/21 19:12:37

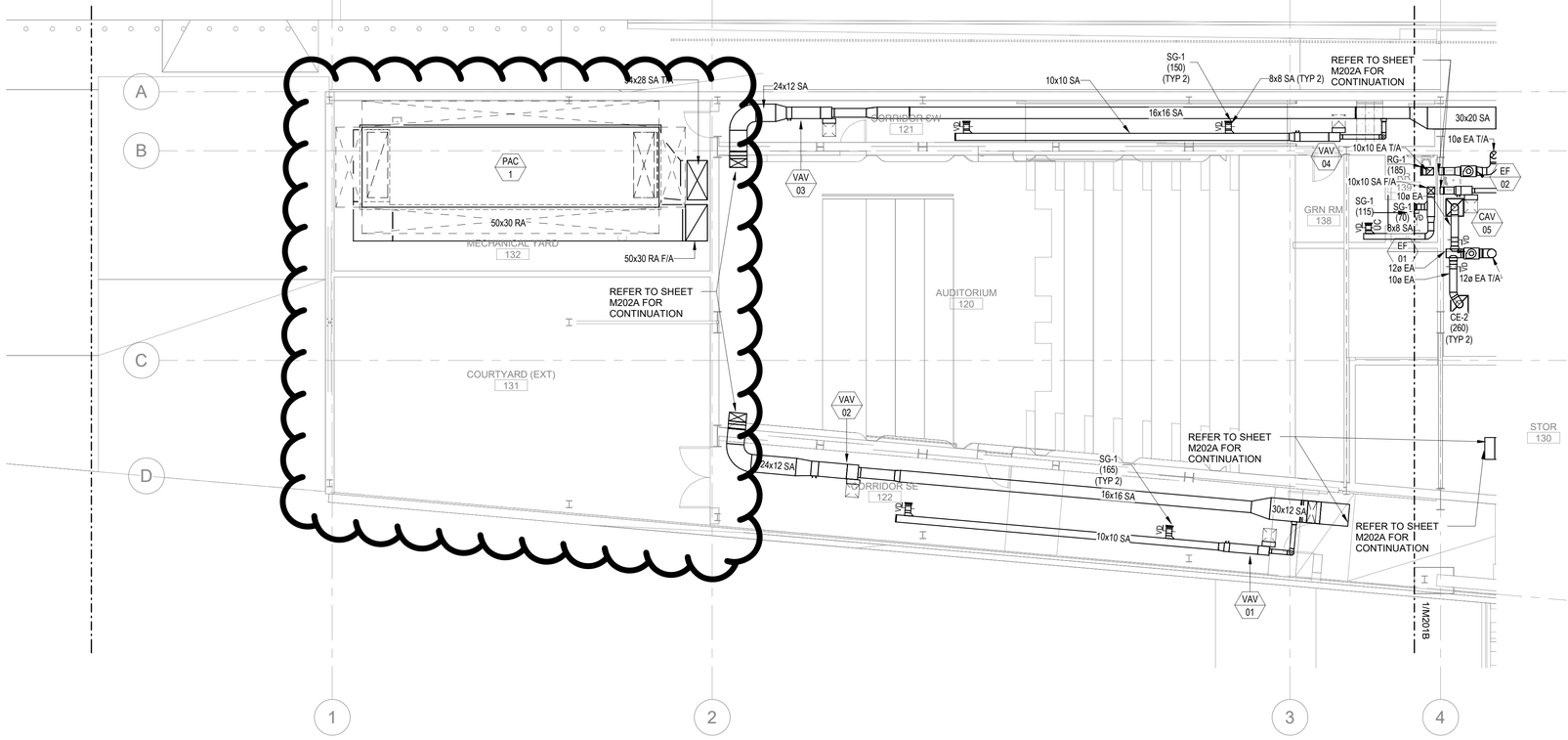

0 4' 8' 16'
SCALE: 1/8" = 1'-0"

N

NOT FOR CONSTRUCTION

09.AUG.2021

belzberg architects
2321 MAIN STREET
SANTA MONICA, CA 90405
310.453.9611
www.belzbergarchitects.com

ARUP
Arup North America Ltd.
900 Wilshire Boulevard,
19th Floor
Los Angeles CA 90017
Tel: 310 578 4400
www.arup.com

#	DESCRIPTION	DATE

HOLOCAUST MUSEUM LA EXPANSION

100 THE GROVE DRIVE
LOS ANGELES, CA 90036

MECHANICAL
LEARNING CENTER
GROUND FLOOR PLAN
- SOUTH

PROJECT NUMBER: 17009

M201A

08/09/21 19:12:43

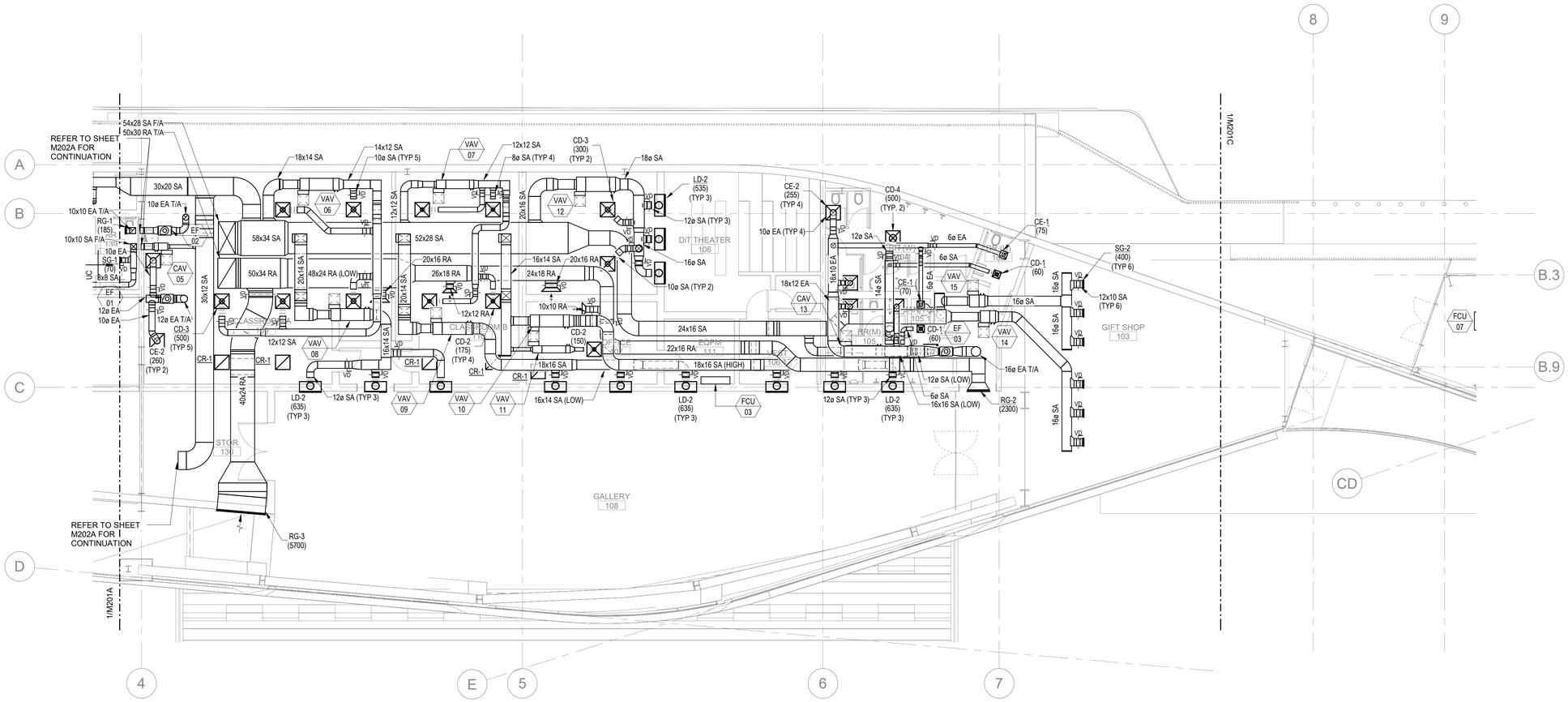

0 4' 8' 16'

SCALE: 1/8" = 1'-0"

N

NOT FOR CONSTRUCTION

09.AUG.2021

belzberg architects

2321 MAIN STREET
SANTA MONICA, CA 90405
310.453.9611

www.belzbergarchitects.com

ARUP

Arup North America Ltd.
900 Wilshire Boulevard,
19th Floor
Los Angeles CA 90017
Tel: 310 578 4400
www.arup.com

#	DESCRIPTION	DATE

HOLOCAUST MUSEUM LA EXPANSION

100 THE GROVE DRIVE
LOS ANGELES, CA 90036

MECHANICAL
LEARNING CENTER
GROUND FLOOR PLAN
- NORTH

PROJECT NUMBER: 17009

M201B

08/09/21 19:12:32

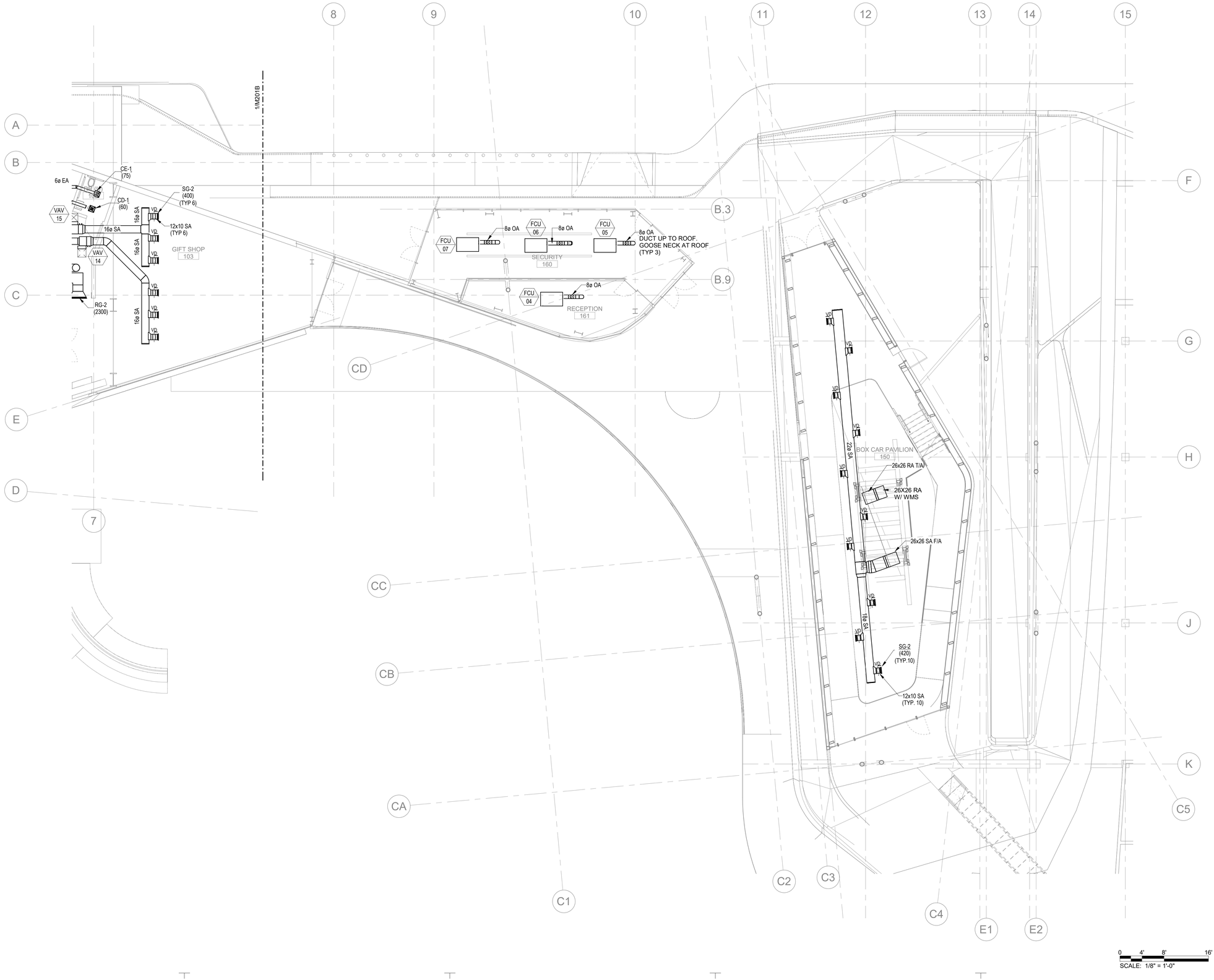

0 4' 8' 16'
SCALE: 1/8" = 1'-0"

N

NOT FOR CONSTRUCTION

09.AUG.2021

ba
belzberg architects
2321 MAIN STREET
SANTA MONICA, CA 90405
310.453.9611
www.belzbergarchitects.com

ARUP
Arup North America Ltd.
900 Wilshire Boulevard,
19th Floor
Los Angeles CA 90017
Tel: 310 578 4400
www.arup.com

#	DESCRIPTION	DATE

HOLOCAUST
MUSEUM LA
EXPANSION

100 THE GROVE DRIVE
LOS ANGELES, CA 90036

MECHANICAL BOXCAR
GROUND FLOOR PLAN

PROJECT NUMBER: 17009

M201C

08/09/21 19:13:01

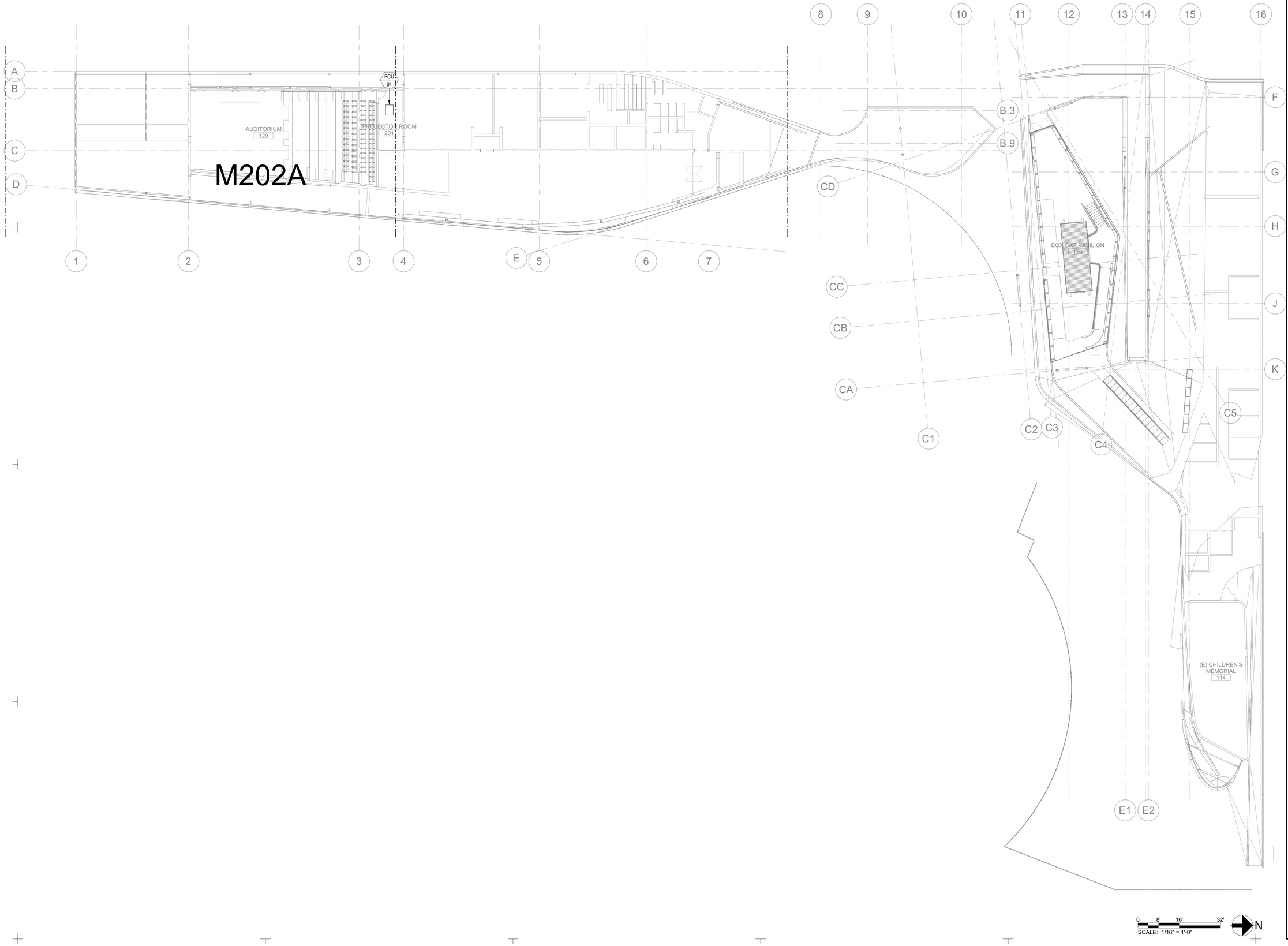

0 8' 16' 32'
SCALE: 1/16" = 1'-0"

N

NOT FOR CONSTRUCTION

09.AUG.2021

belzberg architects
2321 MAIN STREET
SANTA MONICA, CA 90405
310.453.9611
www.belzbergarchitects.com

ARUP
Arup North America Ltd.
900 Wilshire Boulevard,
19th Floor
Los Angeles CA 90017
Tel: 310 578 4400
www.arup.com

#	DESCRIPTION	DATE

HOLOCAUST
MUSEUM LA
EXPANSION

100 THE GROVE DRIVE
LOS ANGELES, CA 90036

MECHANICAL
MEZZANINE FLOOR
PLAN - OVERALL

PROJECT NUMBER: 17009

M202

08/09/21 19:13:08

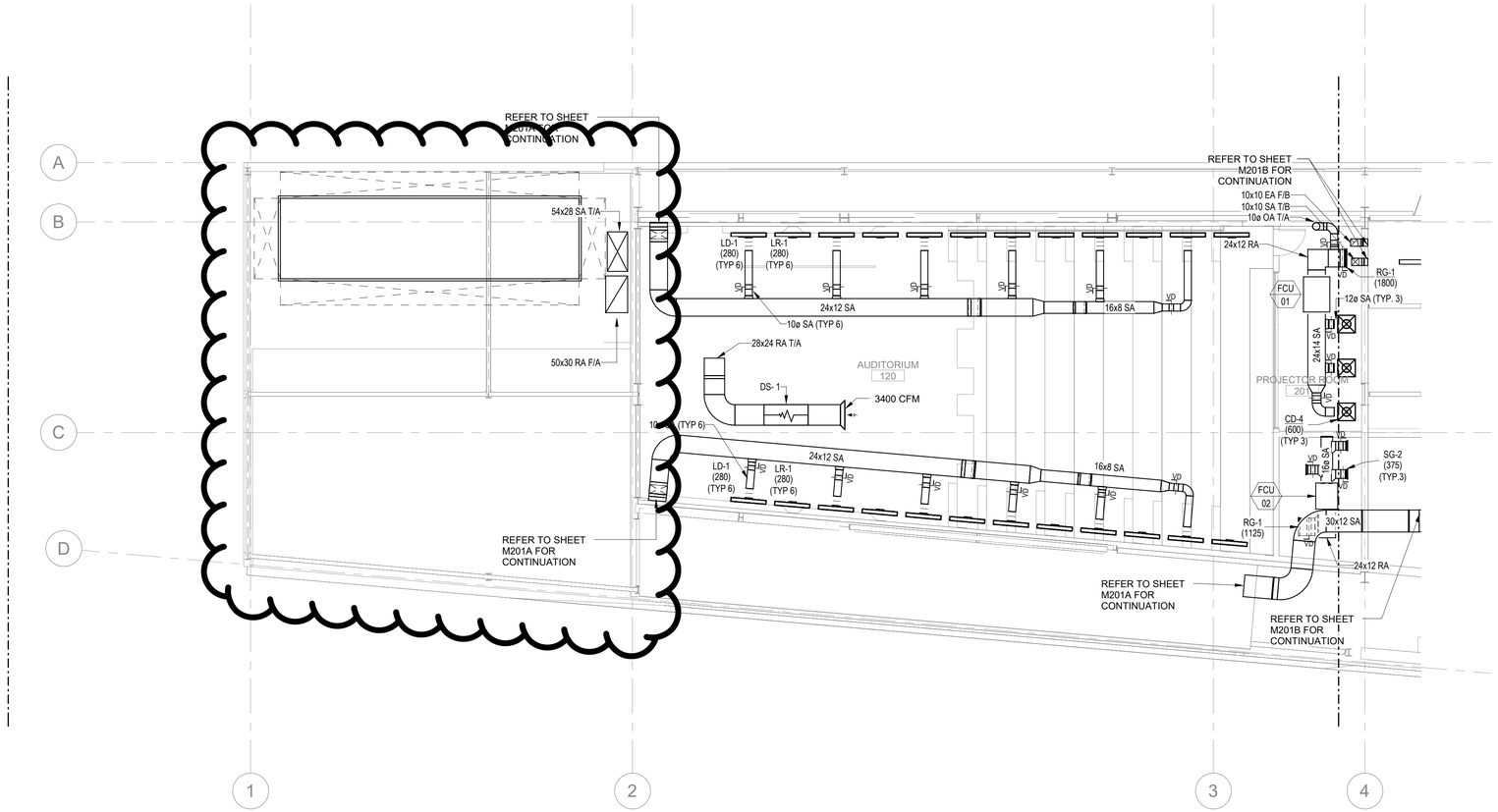

0 8' 16' 32'

SCALE: 1/16" = 1'-0"

N

NOT FOR CONSTRUCTION

09.AUG.2021

belzberg architects

2321 MAIN STREET
SANTA MONICA, CA 90405
310.453.9611

www.belzbergarchitects.com

ARUP

Arup North America Ltd.
900 Wilshire Boulevard,
19th Floor
Los Angeles CA 90017
Tel: 310 578 4400
www.arup.com

#	DESCRIPTION	DATE

HOLOCAUST MUSEUM LA EXPANSION

100 THE GROVE DRIVE
LOS ANGELES, CA 90036

MECHANICAL LEARNING CENTER MEZZ FLOOR PLAN - SOUTH

PROJECT NUMBER: 17009

M202A

08/09/21 19:13:14

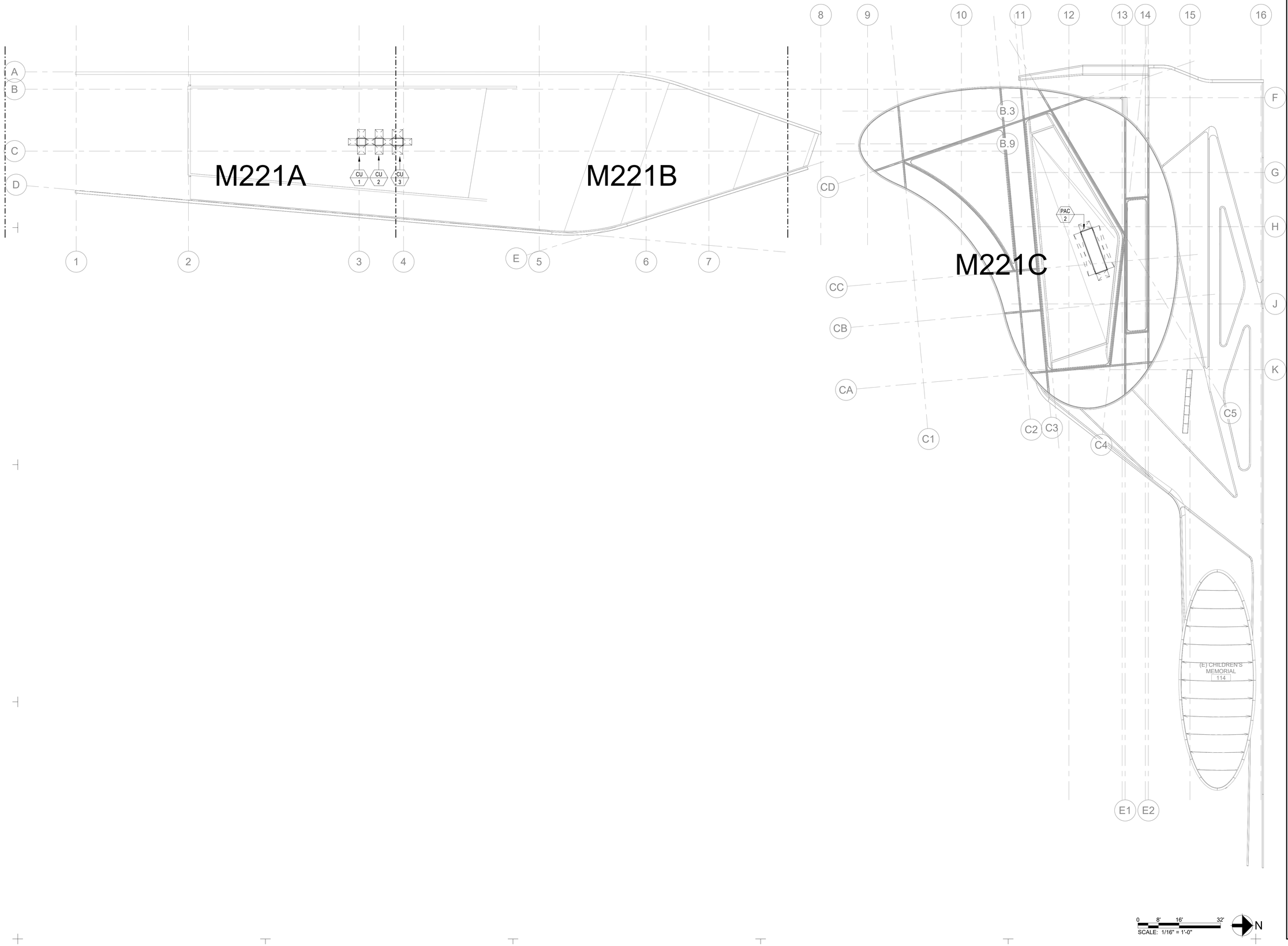

NOT FOR CONSTRUCTION

09.AUG.2021

ba
belzberg architects
2321 MAIN STREET
SANTA MONICA, CA 90405
310.453.9611
www.belzbergarchitects.com

ARUP
Arup North America Ltd.
900 Wilshire Boulevard,
19th Floor
Los Angeles CA 90017
Tel: 310 578 4400
www.arup.com

#	DESCRIPTION	DATE

HOLOCAUST MUSEUM LA EXPANSION

100 THE GROVE DRIVE
LOS ANGELES, CA 90036

MECHANICAL ROOF LEVEL PLAN - OVERALL

PROJECT NUMBER: 17009

M221

08/09/21 19:13:16

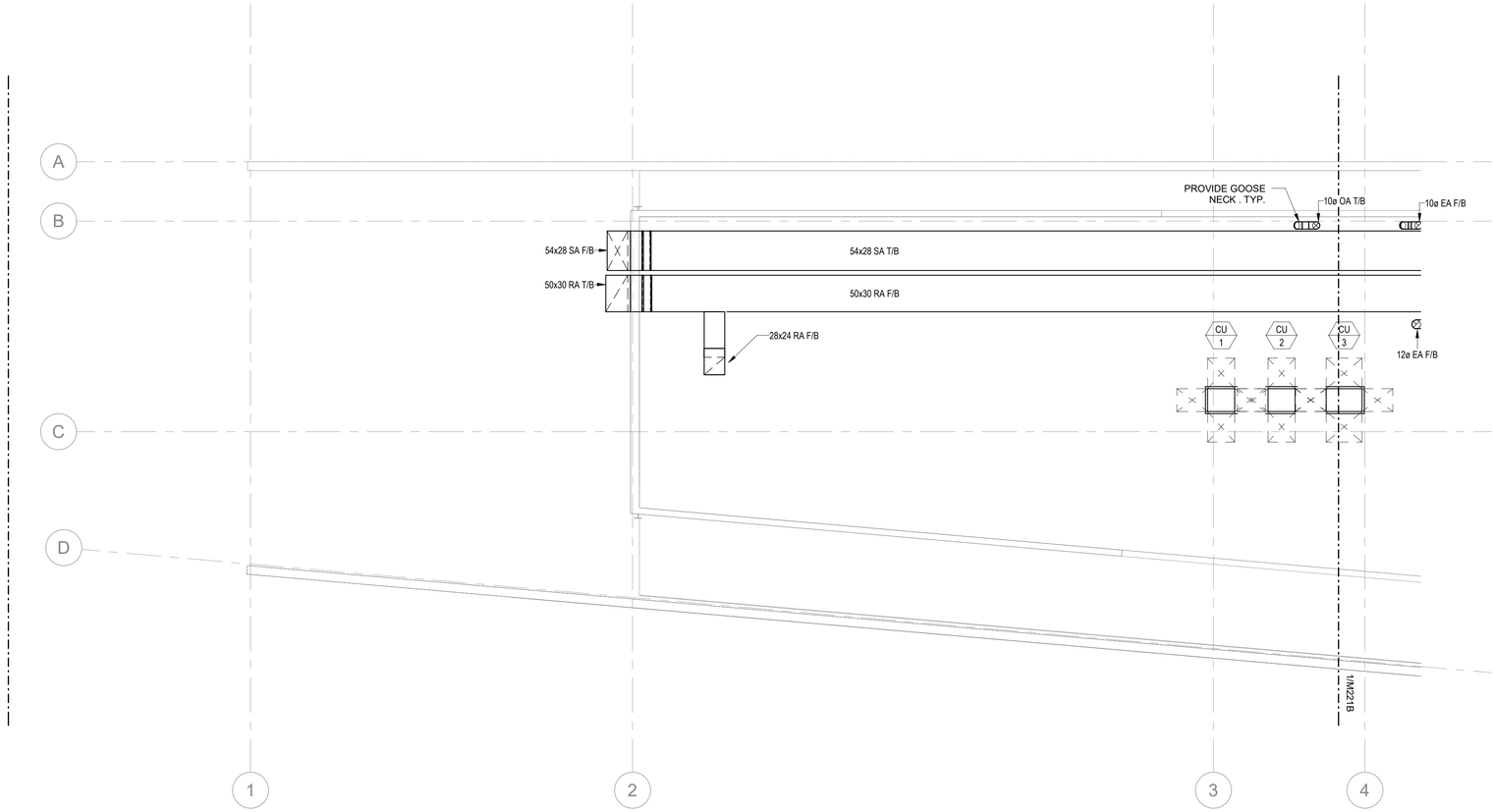

0 4' 8' 16'
SCALE: 1/8" = 1'-0"

N

NOT FOR CONSTRUCTION

09.AUG.2021

ba
belzberg architects
2321 MAIN STREET
SANTA MONICA, CA 90405
310.453.9611
www.belzbergarchitects.com

ARUP
Arup North America Ltd.
900 Wilshire Boulevard,
19th Floor
Los Angeles CA 90017
Tel: 310 578 4400
www.arup.com

#	DESCRIPTION	DATE

HOLOCAUST MUSEUM LA EXPANSION

100 THE GROVE DRIVE
LOS ANGELES, CA 90036

MECHANICAL LEARNING CENTER ROOF LEVEL PLAN - SOUTH

PROJECT NUMBER: 17009

M221A

08/09/21 19:13:16

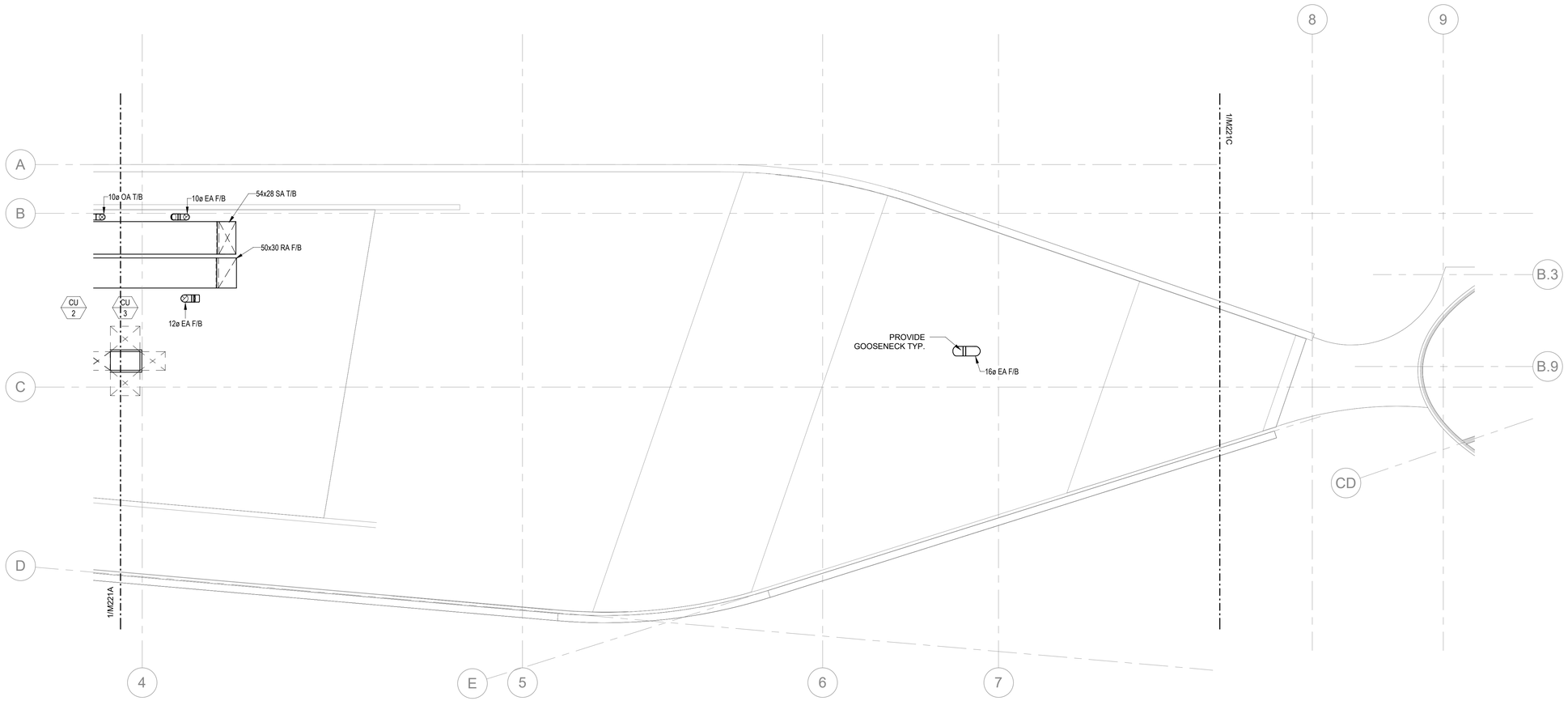

SCALE: 1/8" = 1'-0"

N

NOT FOR CONSTRUCTION

09.AUG.2021

belzberg architects

2321 MAIN STREET
SANTA MONICA, CA 90405
310.453.9611

www.belzbergarchitects.com

ARUP

Arup North America Ltd.
900 Wilshire Boulevard,
19th Floor
Los Angeles CA 90017
Tel: 310 578 4400
www.arup.com

#	DESCRIPTION	DATE

HOLOCAUST MUSEUM LA EXPANSION

100 THE GROVE DRIVE
LOS ANGELES, CA 90036

MECHANICAL LEARNING CENTER ROOF LEVEL PLAN - NORTH

PROJECT NUMBER: 17009

M221B

08/09/21 19:13:19

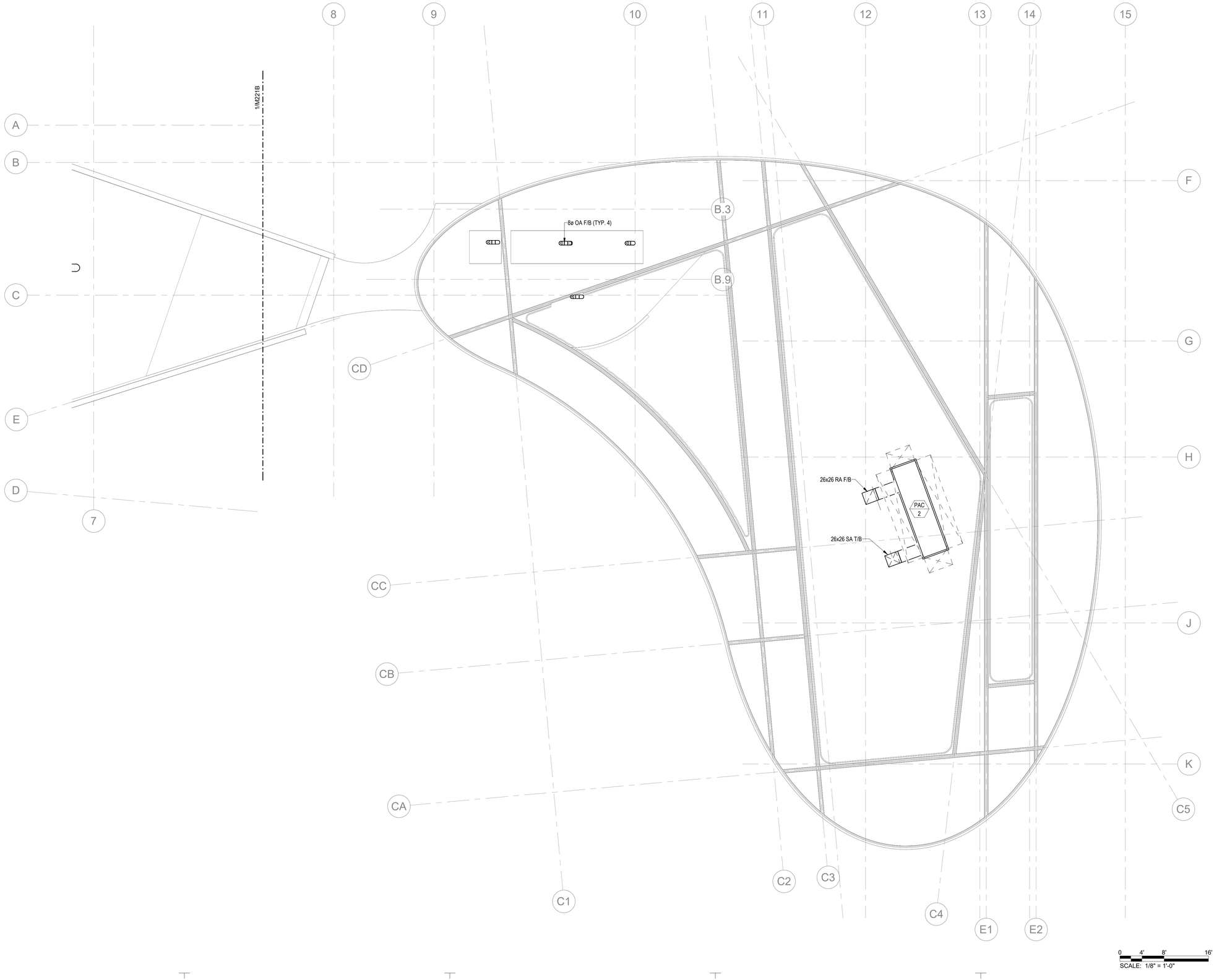

SCALE: 1/8" = 1'-0"

0 4' 8' 16'

N

NOT FOR CONSTRUCTION

09.AUG.2021

belzberg architects

2321 MAIN STREET
SANTA MONICA, CA 90405
310.453.9611

www.belzbergarchitects.com

ARUP

Arup North America Ltd.
900 Wilshire Boulevard,
19th Floor
Los Angeles CA 90017
Tel: 310 578 4400
www.arup.com

#	DESCRIPTION	DATE

HOLOCAUST MUSEUM LA EXPANSION

100 THE GROVE DRIVE
LOS ANGELES, CA 90036

MECHANICAL BOXCAR ROOF LEVEL PLAN

PROJECT NUMBER: 17009

M221C

08/09/21 19:13:21

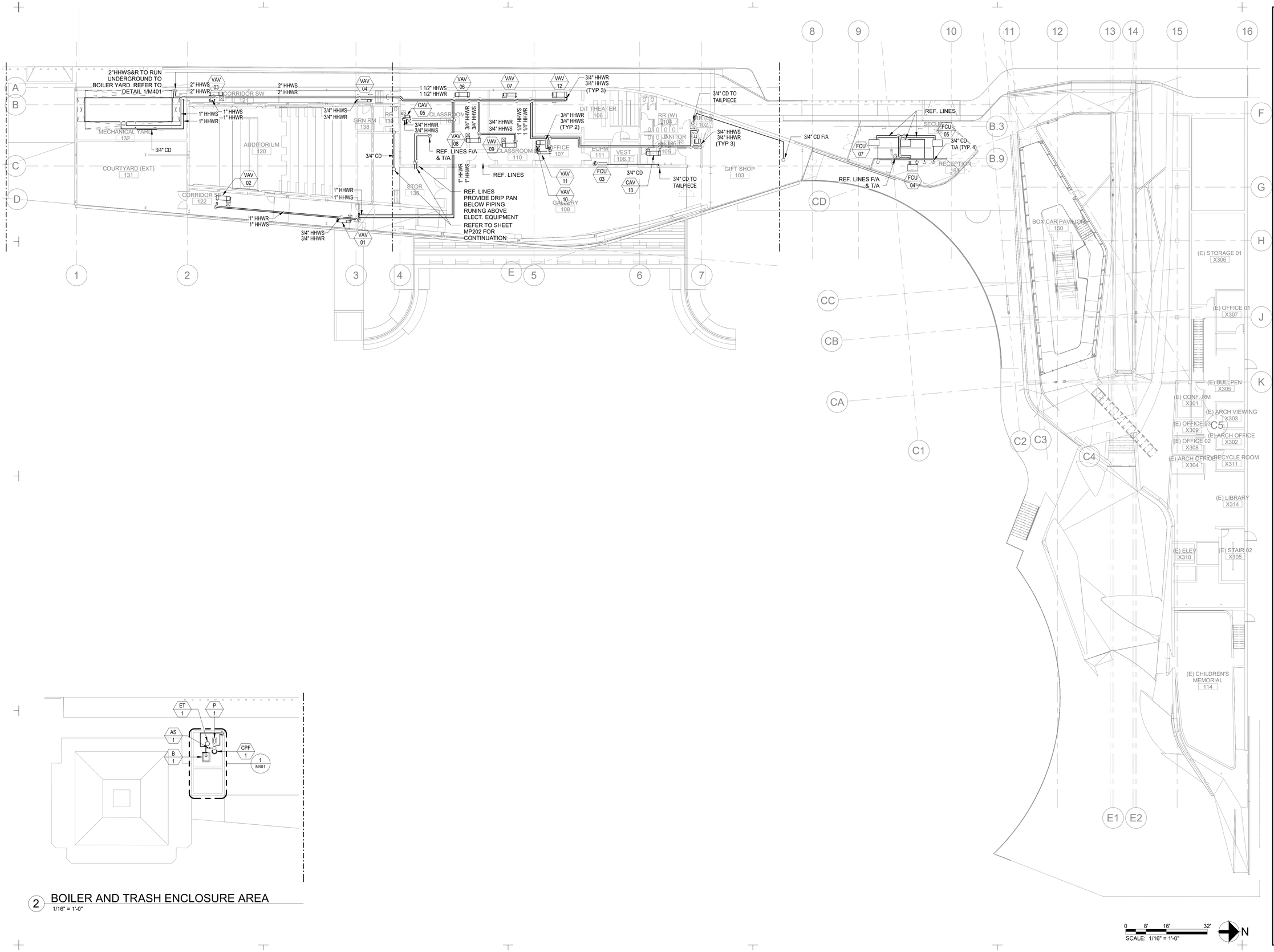

2 BOILER AND TRASH ENCLOSURE AREA
1/16" = 1'-0"

0 8' 16' 32'
SCALE: 1/16" = 1'-0"
N

NOT FOR CONSTRUCTION

09.AUG.2021

belzberg architects
2321 MAIN STREET
SANTA MONICA, CA 90405
310.453.9611
www.belzbergarchitects.com

ARUP
Arup North America Ltd.
900 Wilshire Boulevard,
19th Floor
Los Angeles CA 90017
Tel: 310 578 4400
www.arup.com

#	DESCRIPTION	DATE

HOLOCAUST MUSEUM LA EXPANSION

100 THE GROVE DRIVE
LOS ANGELES, CA 90036

MECHANICAL GROUND FLOOR PIPING PLAN

PROJECT NUMBER: 17009

MP201

08/09/21 19:13:29

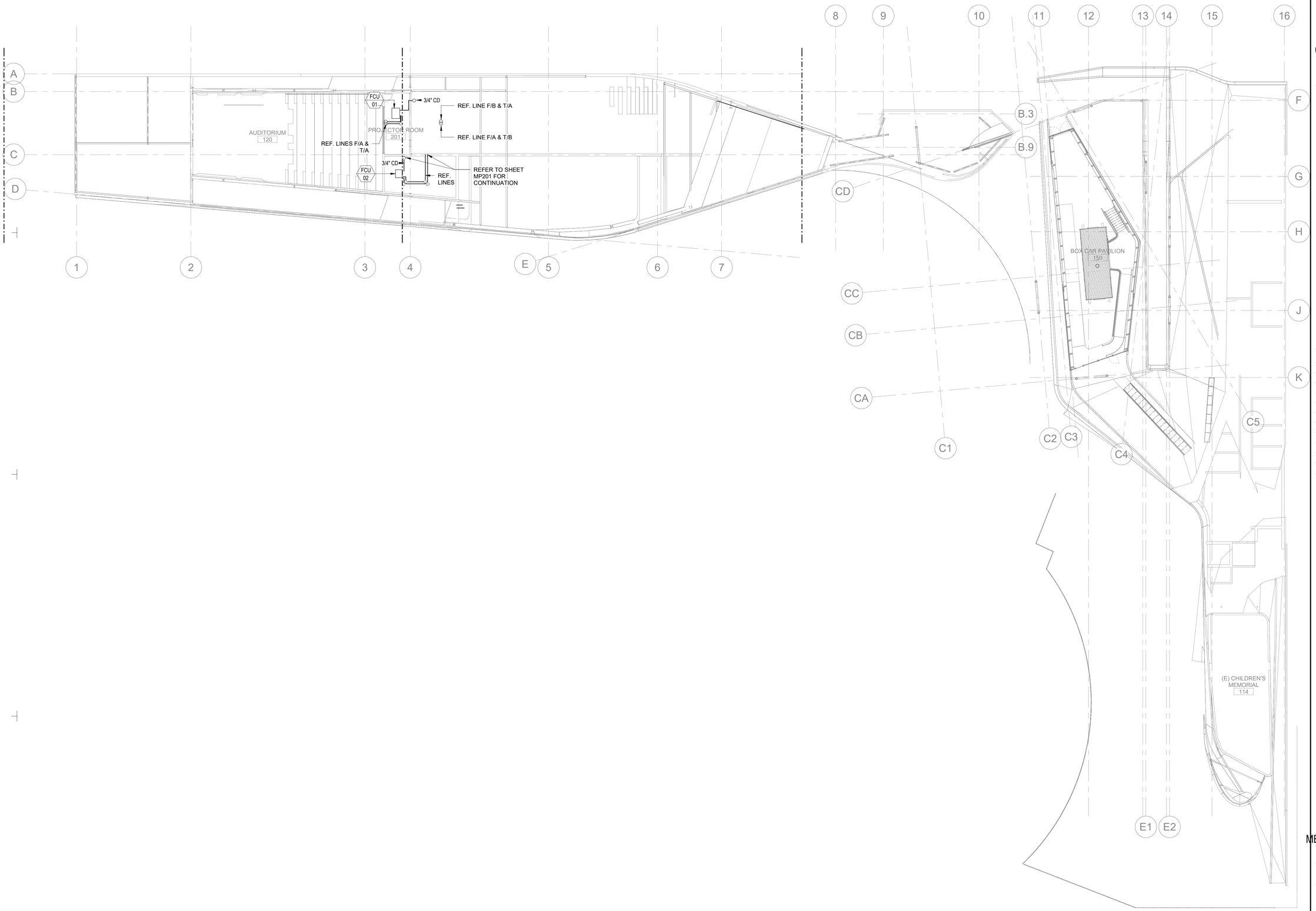

NOT FOR CONSTRUCTION

09.AUG.2021

belzberg architects
2321 MAIN STREET
SANTA MONICA, CA 90405
310.453.9611
www.belzbergarchitects.com

ARUP
Arup North America Ltd.
900 Wilshire Boulevard,
19th Floor
Los Angeles CA 90017
Tel: 310 578 4400
www.arup.com

#	DESCRIPTION	DATE

HOLOCAUST MUSEUM LA EXPANSION

100 THE GROVE DRIVE
LOS ANGELES, CA 90036

MECHANICAL MEZZANINE LEVEL PIPING PLAN

PROJECT NUMBER: 17009

MP202

09/09/21 19:13:36

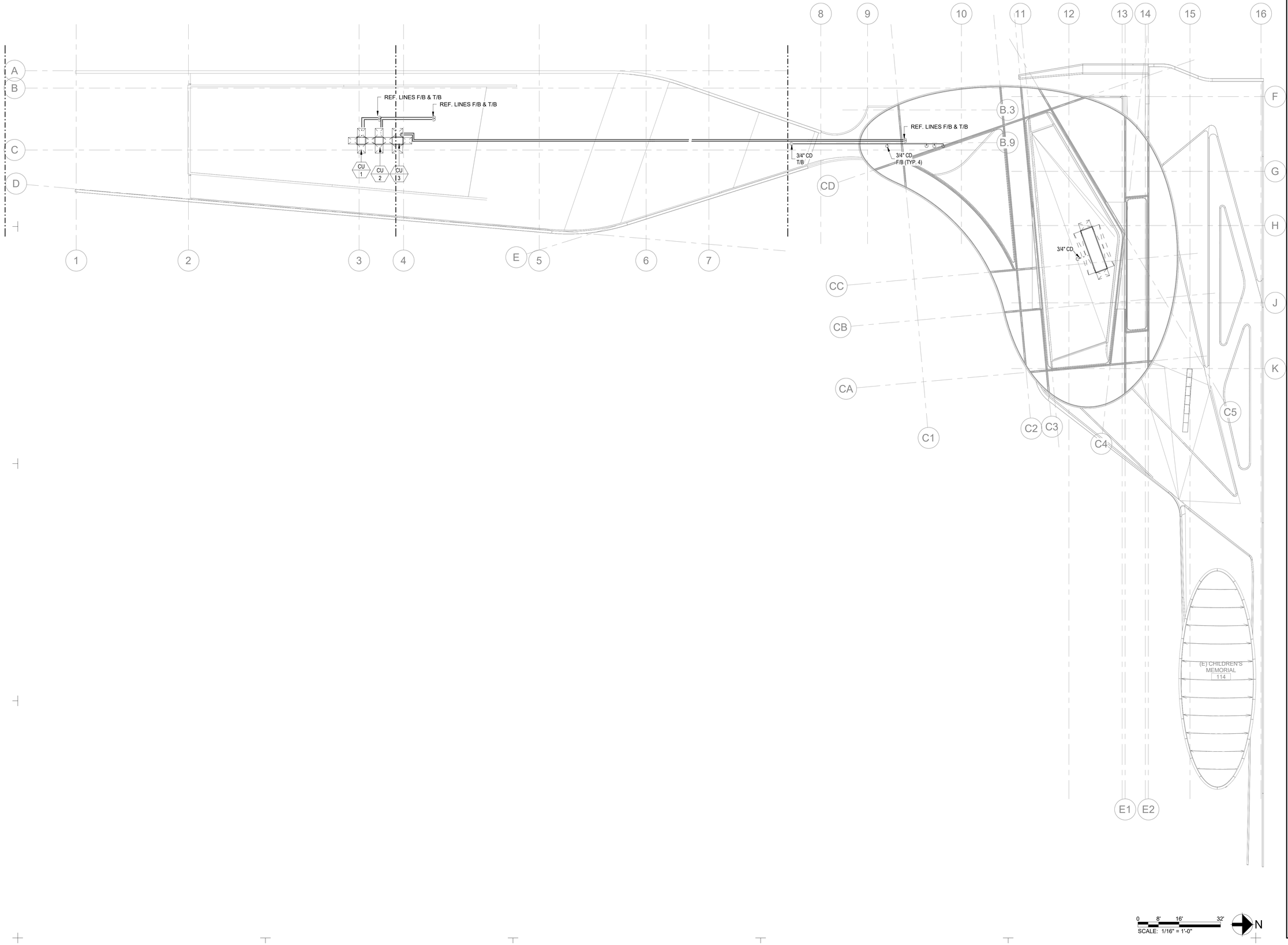

0 8' 16' 32'

SCALE: 1/16" = 1'-0"

N

NOT FOR CONSTRUCTION

09.AUG.2021

belzberg architects
2321 MAIN STREET
SANTA MONICA, CA 90405
310.453.9611
www.belzbergarchitects.com

ARUP
Arup North America Ltd.
900 Wilshire Boulevard,
19th Floor
Los Angeles CA 90017
Tel: 310 578 4400
www.arup.com

#	DESCRIPTION	DATE

HOLOCAUST MUSEUM LA EXPANSION

100 THE GROVE DRIVE
LOS ANGELES, CA 90036

MECHANICAL ROOF LEVEL PIPING PLAN

PROJECT NUMBER: 17009

MP221

08/09/21 19:13:38

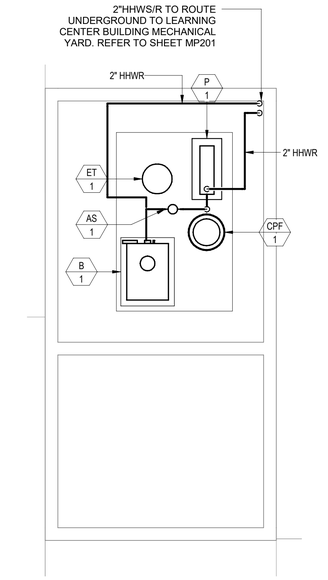

1 MECH_LEVEL 01 - BOILER ROOM
1/4" = 1'-0"

N

NOT FOR CONSTRUCTION

09.AUG.2021

ba
belzberg architects
2321 MAIN STREET
SANTA MONICA, CA 90405
310.453.9611
www.belzbergarchitects.com

ARUP
Arup North America Ltd.
900 Wilshire Boulevard,
19th Floor
Los Angeles CA 90017
Tel: 310 578 4400
www.arup.com

#	DESCRIPTION	DATE

HOLOCAUST MUSEUM LA EXPANSION

100 THE GROVE DRIVE
LOS ANGELES, CA 90036

MECHANICAL ENLARGED PLANS

PROJECT NUMBER: 17009

M401

08/09/21 19:13:21

PLUMBING DRAWING LIST

DWG NO.	DRAWING TITLE
P000	PLUMBING NOTES, SYMBOLS, & ABBREVIATIONS
P010	PLUMBING SCHEDULES
P100	PLUMBING SITE PLAN
P201	PLUMBING GROUND FLOOR PLAN - OVERALL
P201A	PLUMBING LEARNING CENTER GROUND FLOOR PLAN - SOUTH
P201B	PLUMBING LEARNING CENTER GROUND FLOOR PLAN - NORTH
P201U	PLUMBING UNDERGROUND PLAN - OVERALL
P201UA	PLUMBING LEARNING CENTER UNDERGROUND PLAN - SOUTH
P201UB	PLUMBING LEARNING CENTER UNDERGROUND PLAN - NORTH
P221	PLUMBING ROOF LEVEL PLAN - OVERALL
P221A	PLUMBING LEARNING CENTER ROOF LEVEL PLAN - SOUTH
P221B	PLUMBING LEARNING CENTER ROOF LEVEL PLAN - NORTH
P301	PLUMBING RISER DIAGRAMS
P302	PLUMBING RISER DIAGRAMS
P401	PLUMBING ENLARGED PLAN
P601	PLUMBING DETAILS

GENERAL NOTES

1. ENTIRE INSTALLATION SHALL CONFORM TO THE REQUIREMENTS OF CALIFORNIA BUILDING STANDARDS ADMINISTRATIVE CODE 2019, CALIFORNIA BUILDING CODE 2019, CITY OF LOS ANGELES PLUMBING CODE 2019, CITY OF LOS ANGELES FIRE CODE 2019, NATIONAL FIRE PROTECTION ASSOCIATION (NFPA) CODES AND STANDARDS, CITY OF LOS ANGELES FIRE MARSHALL, ALL OTHER APPLICABLE CODES, REGULATIONS AND AUTHORITIES HAVING JURISDICTION.
2. COORDINATE PLUMBING SYSTEMS WITH THE LATEST APPROVED ARCHITECTURAL DRAWINGS. A COPY OF THE GUIDELINES PUBLISHED BY SMACNA SHALL BE PROVIDED BY THE CONTRACTOR AND KEPT ON THE JOB AT ALL TIMES; ALL PLUMBING WORK SHALL COMPLY WITH T24 PART 5 CPC-2019.
3. PLUMBING DRAWINGS ARE GENERALLY DIAGRAMMATIC. VERIFY FIXTURE LOCATIONS AND MOUNTING HEIGHTS WITH ARCHITECTURAL DRAWINGS. VERIFY ROUGH-IN REQUIREMENTS PRIOR TO INSTALLING ANY FIXTURE OR EQUIPMENT FURNISHED BY OWNER.
4. STORM DRAIN SYSTEM SHALL BE SIZED BASED ON 2"/HR RAINFALL INTENSITY.
5. WHERE BRACING DETAILS ARE NOT SHOWN ON THE DRAWINGS OR IN THE GUIDELINES, THE FIELD INSTALLATIONS SHALL BE SUBJECT TO THE APPROVAL OF THE ARCHITECT, AND MECHANICAL ENGINEER.
6. REFER TO ARCHITECTURAL DRAWINGS FOR EXACT LOCATION OF ALL FIXTURES, FLOOR SINKS, AREA DRAINS, FLOOR DRAINS, ROOF AND OVER FLOW DRAINS.
7. PROVIDE SHUT-OFF VALVES AT EACH BRANCH LINE CONNECTING TO A MAIN WHETHER OR NOT SHOWN ON THE PLANS.
8. ELECTRICAL CONTRACTOR SHALL SUPPLY, INSTALL AND TERMINATE ALL 115 VOLT POWER CIRCUIT WIRING AND CONDUIT FOR PLUMBING SYSTEM. CONTROLS CONTRACTOR SHALL SUPPLY, INSTALL AND TERMINATE ALL CONTROL WIRING, EQUIPMENT MOUNTING BOXES, AND ALL ASSOCIATED LOW VOLTAGE CONDUIT.
9. PROVIDE TRAP PRIMER TO ALL FLOOR DRAINS, FLOOR SINKS & COMMON WASTE FLOOR DRAINS. LOCATE ACCESS PANELS CLEAR FROM OBSTRUCTIONS.
10. ALL PIPING SHALL BE LABELED PER SPECIFICATION & NOT LESS THAN 10' -0" INTERVALS.
11. CONTRACTOR SHALL SUBMIT SHOP DRAWINGS COMPLETE WITH SEISMIC CALCULATIONS FOR SUPPORT AND BRACING OF EQUIPMENT AND PIPES.
12. REFER TO STRUCTURAL DRAWINGS FOR HOUSEKEEPING PADS.
13. PROVIDE AND INSTALL WATER HAMMER ARRESTORS ON WATER BRANCH PIPING SERVING FIXTURES WITH FLUSH VALVES OR PRIOR TO ANY QUICK CLOSING WATER DEVICE. PLACEMENT AND SIZING OF ARRESTORS SHALL BE IN ACCORDANCE WITH PDI STANDARD WH-201.
14. REFER TO ARCHITECTURAL SPECIFICATION FOR APPROVED FIRE STOPPING SYSTEM. PIPING PENETRATION THROUGH FIRE RATED WALL AND FLOOR SHALL BE IN ACCORDANCE WITH UL STANDARD.
15. ALL PIPING PASSING THROUGH SEPARATION JOINTS USED AS BUILDING SEISMIC SEPARATIONS SHALL HAVE FLEXIBLE CONNECTIONS TO COMPENSATE FOR SEISMIC MOVEMENT AS REQUIRED. PROVIDE HANGERS ON EACH SIDE OF FLEXIBLE CONNECTION.
16. ALL VENT CONNECTIONS FOR FIXTURES COMPLY WITH PER LAPC 905.3.
17. PROVIDED APPROVED INSULATION WRAP ON ALL EXPOSED WATER SUPPLY AND DRAIN PIPING FOR HANDICAP LAVATORIES AND SINKS.
18. INSTALL SHUT-OFF VALVES AT EACH POC TO EQUIPMENT; PROVIDE VALVES AND OTHER PIPING SPECIALTIES SAME SIZE AS LINE SIZE SHOWN UNLESS OTHERWISE NOTED.
19. ALL CLEAN OUTS TO BE INSTALLED PER SECTION 707 OF THE CITY OF LOS ANGELES PLUMBING CODE.
20. ALL DEVICES AND/OR COMPONENTS THAT COME IN CONTACT WITH POTABLE WATER SERVICE MUST COMPLY W/CA AB1953.
21. ALL FAUCETS IN PUBLIC RESTROOMS SHALL BE SELF-CLOSING SENSOR FAUCETS.
22. PUBLIC LAVATORIES SHALL HAVE CONTROLS TO LIMIT THE WATER TEMPERATURE TO 100° F.
23. SERVICE SINKS SHALL HAVE CONTROLS TO LIMIT THE WATER TEMPERATURE TO 120°F.
24. PIPE IN CONCRETE SHALL BE WRAPPED WITH FLEX WRAP II 1/8" SHEET CLOSED CELL POLYETHYLENE.
25. DOMESTIC POTABLE WATER SYSTEM SHALL BE DISINFECTED PRIOR TO USE ACCORDING TO THE METHOD SET IN SECTION 609.9 OF THE 2020 CITY OF LOS ANGELES PLUMBING CODE.
26. ALL DEVICES AND/OR COMPONENTS THAT COME IN CONTACT WITH POTABLE WATER SERVICE MUST COMPLY W/CA AB1953.
27. NEW PLUMBING FIXTURES AND FITTING SHALL NOT EXCEED THE MAXIMUM ALLOWABLE FLOW RATES SPECIFIED IN SECTION 5.303.2. OF LOS ANGELES PLUMBING CODE.
28. ALL EQUIPMENT, FIXTURES, MATERIALS SHALL BE LISTED.
29. ALL PLUMBING FIXTURES SHALL MEET THE FLOW REQUIREMENTS SPECIFIED IN THE LOS ANGELES PLUMBING CODE.
30. ALL FAUCETS IN PUBLIC RESTROOMS SHALL BE SELF-CLOSING OR SELF-CLOSING METERING FAUCETS.
31. ALL PLUMBING PIPING, VALVES, DEVICES EQUIPMENT AND APPUTERNANCES SHALL BE LISTED BY AN APPROVED THIRD PARTY TESTING AGENCY FOR THE INTENT OF USE.
32. LOCKS SHALL BE INSTALLED ON ALL PUBLICLY ACCESIBLE EXTERIOR FAUCETS AND HOSE BIBS.
33. EXCEPT AS PROVIDED IN THIS SECTION, FOR SITES WITH OVER 500 SQUARE FEET OF LANDSCAPE AREA, ALTERNATE WASTE PIPING SHALL BE INTALLED TO PERMIT DISHCARGE FROM THE CLOTHES WASHER, BATHTUB, SHOWERS, AND BATHROOM/RESTROOMS WASH BASINS TO BE USED FOR A FUTURE GRAYWATER IRRIGATION SYSTEM.
34. EXCEPT AS PROVIDED IN THIS SECTION, WHERE CITY RECYCLED WATER IS AVAILABLE WITHIN 200 FEET OF THE PROPERTY LINE, WATER CLOSETS, URINALS, FLOOR DRAINS, AND PROCESS COOLING AND HEATING IN THE BUILDING SHALL BE SUPPLIED FROM RECYCLED WATER AND SHALL BE INSTALLED IN ACCORDANCE WITH THE LOS ANGELES PLUMBING CODE.
35. PROVIDE A HOT WATER SYSTEM COMPLYING WITH ONE OF THE FOLLOWING: A. THE HOT WATER SYSTEM SHALL NOT ALLOW MORE THAN 0.6 GALLONS OF WATER TO BE DELIVERED TO ANY FIXTURE BEFORE HOT WATER ARRIVES. B. WHERE A HOT WATER RECIRCULATION OR ELECTRIC RESISTANCE HEAT TRACE WIRE SYSTEM IS INSTALLED, THE BRANCH FROM THE RECIRCULATING LOOP OR ELECTRIC RESISTANCE HEAT TRACE WIRE TO THE FIXUTRE SHALL CONTAIN A MAXIMUM OF 0.6 GALLONS.

SYMBOLS

SYMBOL	DESCRIPTION
	SANITARY PIPING BELOW GRADE
	SANITARY PIPING ABOVE GRADE
	VENT PIPING
SD	STORM DRAINAGE PIPING
SD	STORM DRAINAGE PIPING BELOW GRADE
	COLD WATER PIPING
	HOT WATER PIPING
	HOT WATER RETURN PIPING
G	GAS PIPING
	SHUT-OFF VALVE
	CHECK VALVE
	PRESSURE REDUCING VALVE
	BALANCING VALVE ASSEMBLY
	COCK VALVE
	VALVE IN VERTICAL
	CURB VALVE
	MIXING VALVE
	PIPE DROP, RISE OR DOWN
	PIPE CONNECTION, TOP
	PIPE CONNECTION, BOTTOM
	PIPE UP
	"P" TRAP
	CLEANOUT
	CLEANOUT DECK PLATE
	CAPPED OUTLET
	DIELECTRIC UNION
	VENT THROUGH ROOF
	FLOOR DRAIN, AREA DRAIN
	FLOOR SINK
	ROOF DRAIN, OVERFLOW DRAIN
	YARD HYDRANT
	HOSE BIBB
	WALL HYDRANT
VB	VACUUM BREAKER ASSEMBLY
	THERMOMETER
	PRESSURE GAUGE W/VALVE
BFP	BACKFLOW PREVENTER
	FLOOR, AREA DRAIN (RISER)
	ROOF DRAIN (RISER)
	WATER HAMMER ARRESTOR
	FRESH AIR INLET (FAI)
M	METER
F	WATER FILTER
	PUMP
	DIRECTION OF FLOW
	PIPE BREAK
P / #	RISER DESIGNATION
ST / #	LEADER DESIGNATION
* / #	EQUIPMENT DESIGNATION

SYMBOLS

SYMBOL	DESCRIPTION
AV	ACID VENT PIPING
AW	ACID WASTE PIPING
CA	COMPRESSED AIR PIPING (INSTRUMENT GRADE)
GRW	GRAY WATER PIPING
EPD	EJECTOR PUMP DISCHARGE PIPING
FAI	FRESH AIR INLET
GW	GREASE WASTE PIPING
IW	INDIRECT WASTE PIPING
SPD	SUMP PUMP DISCHARGE PIPING
OD	OVERFLOW DRAINAGE PIPING
TF	TANK FILL PIPING
TW	TEPID WATER PIPING
NP	NON-POTABLE WATER PIPING
VAC	VACUUM PIPING
O2	OXYGEN PIPING
N2	NITROGEN PIPING
CO2	CARBON DIOXIDE PIPING
TP	TRAP PRIMER PIPING
	ELECTRIC HEAT TRACING
	EXISTING PIPING TO BE REMOVED
	EXISTING PIPING TO BE ABANDONED
	POINT OF DISCONNECTION FOR EXISTING WORK
	POINT OF CONNECTION NEW PIPE TO EXISTING
	MOTOR VALVE
	SOLENOID VALVE
	DIAPHRAGM VALVE
	BALANCING VALVE
	ANGLE VALVE
	OS & Y VALVE
	OS & Y VALVE IN VERTICAL
	GAS PRESSURE REGULATOR
	AUTOMATIC AIR VENT VALVE
	T & P RELIEF VALVE
	BACKWATER VALVE
TP	TRAP PRIMER
T & P	HOUSE TRAP
	AQUASTAT
EJ	EXPANSION JOINT
	FLEXIBLE CONNECTION
	EXPANSION LOOP
	CONCENTRIC REDUCER
	STRAINER Y-TYPE
	BASKET STRAINER
	STANDPIPE (RISER)
	WATERTIGHT PIPE SLEEVE, BEAM PENETRATION
GD	GUTTER DRAIN (RISER)
	FUNNEL DRAIN (RISER)
FS	FLOOR SINK (RISER)
MS	MOP SINK (RISER)
SH	SHOWER DRAIN (RISER)

ABBREVIATIONS

SYMBOL	DESCRIPTION
AD	AREA DRAIN
ARCH	ARCHITECTURAL
BFP	BACKFLOW PREVENTER
BLDG	BUILDING
CA	COMPRESSED AIR
CLG	CEILING
CO	CLEANOUT
CODP	CLEANOUT DECK PLATE
COWP	CLEANOUT WALL PLATE
CONN	CONNECTION
CONT	CONTINUATION
CW	DOMESTIC COLD WATER
DCV	DOUBLE CHECK VALVE
DET	DETAIL
DFU	DRAINAGE FIXTURE UNIT
DIA	DIAMETER
DIM	DIMENSION
DN	DOWN
DR	DRAIN
DWG	DRAWING
EA	EACH
EJ	EXPANSION JOINT
EL	ELEVATION
EQ	EQUAL
EWC	ELECTRIC WATER COOLER
EWH	ELECTRIC WATER HEATER
EXIST	EXISTING
FAI	FRESH AIR INLET
FCO	FLOOR CLEANOUT
FD	FLOOR DRAIN
FS	FLOOR SINK
F.F.	FINISH FLOOR
FL	FLOOR
G	GAS PIPING
GAL	GALLON
GD	GUTTER DRAIN
GPH	GALLON PER HOUR
GPM	GALLON PER MINUTE
HB	HOSE BIBB
HW	DOMESTIC HOT WATER
HWR	DOMESTIC HOT WATER RETURN
I.E.	INVERT ELEVATION
IW	INDIRECT WASTE
LG	LOW PRESSURE GAS
MAX	MAXIMUM
MECH	MECHANICAL
MG	MEDIUM PRESSURE GAS
MH	MANHOLE
MIN	MINIMUM
NC	NORMALLY CLOSED
NO	NORMALLY OPEN
NTS	NOT TO SCALE
OD	OVERFLOW DRAIN
PRV	PRESSURE REDUCING VALVE
RD	ROOF DRAIN
RPZ	REDUCED PRESSURE ZONE
S	SANITARY WASTE
SF	SQUARE FEET
ST	STORM DRAINAGE
TD	TRENCH DRAIN
TP	TRAP PRIMER
TYP	TYPICAL
V	VENT
UON	UNLESS OTHERWISE NOTED
VIF	VERIFY IN FIELD
VLV	VALVE
VTR	VENT THROUGH ROOF
W	WASTE
W/	WITH
WC	WATER CLOSET
WCO	WALL CLEANOUT
W/O	WITHOUT
WH	WALL HYDRANT
WHA	WATER HAMMER ARRESTOR
YH	YARD HYDRANT

NOT FOR CONSTRUCTION

09.AUG.2021

belzberg architects
2321 MAIN STREET
SANTA MONICA, CA 90405
310.453.9611
www.belzbergarchitects.com

ARUP
Arup North America Ltd.
900 Wilshire Boulevard,
19th Floor
Los Angeles CA 90017
Tel: 310 578 4400
www.arup.com

#	DESCRIPTION	DATE

HOLOCAUST MUSEUM LA EXPANSION

100 THE GROVE DRIVE
LOS ANGELES, CA 90036

PLUMBING NOTES, SYMBOLS, & ABBREVIATIONS

PROJECT NUMBER: 17009

P000

08/09/21 13:40

THERMOSTATIC MIXING VALVE SCHEDULE

SYMBOL	LOCATION	SERVICE	MANUFACTURER & MODEL NO.	TYPE	AREA BEING SERVED	SET TEMP (°F)	FLOW RATE, (GPM)	INLET/OUTLET SIZE (IN)	REMARKS
MV-1	PUBLIC RESTROOMS	DOMESTIC HOT WATER	LEONARD 270-LF	THERMOSTATIC CONTROL	PUBLIC RESTROOMS	105-107	0.25-3	1/2"	SINGLE VALVE SERVING EACH GANG LAVS AT THE PUBLIC RESTROOMS.

BACKFLOW PREVENTER SCHEDULE

SYMBOL	LOCATION	TYPE	SYSTEM	CAPACITY (GPM)	SIZE (IN)	PRESSURE LOSS (PSI)	MANUFACTURER & MODEL NO.	REMARKS
BFP-1	MECHANICAL YARD	REDUCED PRESSURE	DOMESTIC COLD WATER	80	3"	12	WATTS LF909-NRS-S-FDA	-
BFP-2	MECHANICAL YARD	DUAL CHECK	FIRE PROTECTION WATER	450	4"	5	WATTS 744DCDAOSY	-
BFP-3	BOILER YARD	REDUCED PRESSURE	MECHANICAL MAKE UP	10	1 1/4"	11	WATTS LF909-QT-S	BOILER MAKE UP

ELECTRIC WATER HEATER SCHEDULE

SYMBOL	LOCATION	TYPE	STORAGE (GALLONS)	RECOVERY	TANK SIZE		MANUFACTURER & MODEL NO.	ELECTRICAL DATA				REMARKS
					HEIGHT (IN)	DIA. (IN)		KW	VOLT	PHASE	HZ	
EWH 1	JANITOR	TANK	40	20 GPH @ 60°F	32 1/4"	24"	AO SMITH DEL-40	3	480	3	60	DUAL ELEMENT WITH NON-SIMULTANEOUS OPERATION. SEE DETAIL 1/P401
EWH-2	RESTROOM 139	INSTANTANEOUS	-	-	-	-	EEMAX AM004277T	4.1	277	1	60	SEE DETAIL 3/P401
EWH-3	CLASSROOM A 109	INSTANTANEOUS	-	-	-	-	EEMAX AM010277T	10	277	1	60	SEE DETAIL 3/P401

PUMP SCHEDULE

SYMBOL	LOCATION	TYPE	SYSTEM	CAPACITY		MANUFACTURER & MODEL NO.	ELECTRICAL REQUIREMENTS				EMERGENCY POWER	OPERATING WEIGHT (LBS)	REMARKS
				FLOW (GPM)	HEAD (FT)		HP	V	Ø	Hz			
CP-1	JANITOR	IN-LINE CIRCULATOR	120°F DOMESTIC HOT WATER	2.01	5.94	GRUNDFOS UPS 15-35 SFC	0.08	115	1	60	NO	6	AT EWH-1. SEE DETAIL 1/P401

FITNESS DOMESTIC WATER CALCULATION

					COLD WATER
	INFORMATION OBTAINED FROM:	LADWP			
A.	DESIGN BASE PRESSURE:	MAXIMUM			168 PSI
		MINIMUM			140 PSI
		ELEVATION			201
B.	TOTAL FIXTURE UNITS:	FIXTURE TYPE:	MOSTLY FLUSH VALVE		
		FIXTURE UNITS (EXISTING)			0 F.U
		FIXTURE UNITS (NEW)			78.5 F.U.
		TOTAL FIXTURE UNITS			78.5 F.U.
C.	TOTAL WATER DEMAND:	DOMESTIC			62 GPM
		IRRIGATION			0 GPM
		MECHANICAL (HVAC)			10 GPM
		OTHER			0 GPM
		TOTAL			72 GPM

D.	RESIDUAL PRESSURE REQUIRED AT REMOTE OUTLET:				CPC608.1	25.00	PSI
E.	PRESSURE LOSS DUE TO HEIGHT	24	FT*0.433			10.39	PSI
F.	PRESSURE LOSS THRU	3"	METER @	72	GPM	0.90	PSI
G.	PRESSURE LOSS	N/A	PRV DEVICE @	72	GPM	0.00	PSI
H	OTHER PRESSURE LOSSES 4"BFP					11.00	PSI
I.	TOTAL PRESSURE LOSS					47.29	PSI
K.	PRESSURE AVAILABLE FOR FRICTION LOSS					92.71	PSI

L.	DEVELOPED PIPE LENGTH:	BUILDING TO LAST FIXTURE			80 FT
		20	% FOR FITTINGS		16 FT
		TOTAL DEVELOPED LENGTH			96 FT
	ALLOWABLE FRICTION LOSS PER 100' OF PIPE	100(92.71)	/ (	96)	96.57 PSI

COLD WATER: PIPE SIZES BASED ON TYPE "L" COPPER @ 96.50 PSI/100' & 8 FPS MAX.

COLD WATER

PIPE SIZE (IN)	F.T. F.U.	F.V. F.U.	PIPE SIZE (IN)	F.T. F.U.	F.V. F.U.	PIPE SIZE (IN)	F.T. F.U.	F.V. F.U.
1/2	6	#N/A	1 1/2	103	#N/A	3 1/2	1091	430
3/4	16	#N/A	2	254	14	4	1668	811
1	30	#N/A	2 1/2	455	60	6	2200	2200
1 1/4	56	#N/A	3	719	186	8	4480	4480

HOT WATER: PIPE SIZES BASED ON TYPE "L" COPPER @ 96.50 PSI/100' & 5 FPS MAX.

HOT WATER

PIPE SIZE (IN)	F.T. F.U.	PIPE SIZE (IN)	F.T. F.U.	PIPE SIZE (IN)	F.T. F.U.
1/2	3	1 1/2	46	3 1/2	585
3/4	8	2	119	4	840
1	16	2 1/2	245		
1 1/4	28	3	406		

UTILITY LOAD CALCULATION FITNESS

CODE: CALIFORNIA PLUMBING CODE 2019

QTY.	FIXTURE	TYPE	WASTE		WATER		HOT WATER		GAS	
			F.U.	TOTAL	F.U.	TOTAL	F.U.	TOTAL	CFH	TOTAL
11	WATER CLOSET, 1.6 GPF FLUSH VALVE	PUBLIC	4.0	44.0	5.0	55.0	0.0	0.0		
2	URINAL, 1.0 GPF FLUSH VALVE	PUBLIC	2.0	4.0	4.0	8.0	0.0	0.0		
9	LAVATORY (SINGLE)	PUBLIC	1.0	9.0	1.0	9.0	1.0	9.0		
1	DRINKING FOUNTAIN	PUBLIC	0.5	0.5	0.5	0.5	0.0	0.0		
2	SERVICE SINK/MOP BASIN	PUBLIC	3.0	6.0	3.0	6.0	3.0	6.0		
2	FLOOR DRAIN, 2" TRAP	PUBLIC	2.0	4.0	0.0	0.0	0.0	0.0		
2	RECEPTOR, INDIRECT WASTE,<7.5GPM	PUBLIC	1.0	2.0	0.0	0.0	0.0	0.0		
		PUBLIC	0.0	0.0	0.0	0.0	0.0	0.0		
	HVAC EQUIPMENT									0
	DOMESTIC WATER									0
	KITCHEN EQUIPMENT									0
	OTHERS									0
			TOTAL	69.5	TOTAL	78.5	TOTAL	15.0	TOTAL	0

PLUMBING FIXTURE SCHEDULE

SYM.	DESCRIPTION	FIXTURE UNIT		MIN BRANCH SIZE (IN)				TRAP SIZE	TYPE	APPLICATION	MANUFACTURER & MODEL	REMARKS
		W/S	CW	W	V	CW	HW					
WC-1	WATER CLOSET	4	5	4"	2"	1 1/2"	-	INT.	WALL MOUNTED	PUBLIC	_	ELONGATED BOWL,1.28 GPF.
WC-2	WATER CLOSET	4	5	4"	2"	2 1/2"	-	INT.	WALL MOUNTED	ADA PUBLIC	_	MOUNTED PER ADA REQUIREMENTS, ELONGATED BOWL 1.28 GPF.
U-1	URINAL	2	4	2"	1 1/2"	1"	-	INT.	WALL MOUNTED	PUBLIC	_	0.125GPF,
U-2	URINAL	2	4	2"	2 1/2"	1"	-	INT.	WALL MOUNTED	ADA PUBLIC	_	MOUNTED PER ADA REQUIREMENTS, 0.125 GPF.
L-1	LAVATORY	1	1	2"	1 1/2"	3/4"	3/4"	11/2" X 1 1/4"	UNDERCOUNTER MOUNTED	ADA PUBLIC	_	_
L-2	LAVATORY	1	1	2"	2 1/2"	3/4"	3/4"	11/2" X 1 1/4"	WALL MOUNTED	ADA PUBLIC	_	_
SS-1	SERVICE SINK	3	3	3"	2"	3/4"	3/4"	3"	FLOOR MOUNTED	-	CECO871 WITH CHICAGO FAUCET 305-VBRXKRCF	-
S-1	SINK	2	2	2"	1 1/2"	1/2"	1/2"	2"	UNDERCOUNTER MOUNTED	ADA	_	_
IM-1	ICE MAKER BOX	-	0.5	-	-	1/2"	-				SIOUX CHIEF 696-G1000PF	
DF-1	DRINKING FOUNTAIN	0.5	0.5	-	-	1/2"	-				SIOUX CHIEF 696-G1000PF	
TP-1	TRAP PRIMER	-	-	-	-	1/2"	-	-	-	-	PPP MPB-500-115V WITH DISTRIBUTION UNIT	PROVID TRAP PRIMER DISTRIBUTION UNIT (TPDU) FOR 2-4 DRAINS. AS REQUIRED
FD-1	FLOOR DRAIN	-	-	2"	1 1/2"	-	-	-	-	-	J.R. SMITH NO. 2005Y	PUBLIC RESTROOMS-
FD-2	FLOOR DRAIN	-	-	2"	2 1/2"	-	-	-	-	-	J.R. SMITH NO. 2110Y	MECHANICAL ROOM
HD-1	HUB DRAIN	8	-	6"	3"	-	-	6"	-	-	-	SEE DETAIL 4/P4.001.
HB-1	HOSE BIBB	-	2.5	-	-	3/4"	-	-	-	-	ZURN MODEL Z1341-XL	PIPE/WALL MOUNTED HOSE BIBB WITH NONREMOVABLE VACUUM BRAKER.
HB-2	HOSE BIBB	-	1	-	-	3/4"	-	-	-	-	ZURN MODEL Z1350	ENCASED WALL HYDRANT , ALL BRONZE INTERIOR PARTS, KEY OPERATED CONTROL VALVE, ADJUSTABLE STAINLESS STEEL BOX FURNISHED, WITH NONREMOVABLE VACUUM BRAKER.
HB-3	HOSE BIBB	-	1	-	-	3/4"	-	-	-	-	ZURN MODEL Z1388-XL	ENCASED ROOF HYDRANT , ALL BRONZE INTERIOR PARTS, KEY OPERATED CONTROL VALVE, ADJUSTABLE STAINLESS STEEL BOX FURNISHED, WITH NONREMOVABLE VACUUM BRAKER.
FS-1	FLOOR SINK	-	-	2"	2"	-	-	-	-	-	J.R. SMITH NO. 3140Y	PROVIDE WITH TRAP PRIMER CONNECTION, ACID RESISTANT COATED, SQUARE.
RR-1	ROOF RECEPTOR	-	-	-	-	-	-	-	-	-	J.R. SMITH 3970Y	

PLUMBING MATERIAL SCHEDULE

SERVICE	MATERIAL	PVC	COPPER TYPE "L"	COPPER TYPE "K"	BLACK STEEL	CAST IRON SOIL PIPE & FITTINGS	STAINLESS STEEL	REMARKS
DOMESTIC WATER	INSIDE		•					-
	OUTSIDE / UNDERGROUND			•				-
SANITARY WASTE , GRAY WASTE & VENT (SAN, V)	ABOVE GRADE					•		-
	BELOW GRADE					•		-
STORM & OVERFLOW DRAIN (SD, OD)	ABOVE GRADE					•		-
	BELOW GRADE					•		-

PRESSURE REDUCING VALVE ASSEMBLY SCHEDULE

SYMBOL	LOCATION	SYSTEM	CAPACITY (GPM)	SIZE (IN)	PRESSURE LOSS (PSI)	PRESSURE SET (PSI)	MANUFACTURER & MODEL NO.	DIMENSION (IN)		REMARKS
								LENGTH	WIDTH	
PRV-1	MECHANICAL YARD	DOMESTIC WATER	80	_	7	75	WILLKINS 500XLYSBR	10"	7 1/2"	LEAD FREE. SEE DETAIL 2/P401.

NOT FOR CONSTRUCTION

09.AUG.2021

belzberg architects
2321 MAIN STREET
SANTA MONICA, CA 90405
310.453.9611
www.belzbergarchitects.com

ARUP
Arup North America Ltd.
900 Wilshire Boulevard,
19th Floor
Los Angeles CA 90017
Tel: 310 578 4400
www.arup.com

#	DESCRIPTION	DATE

HOLOCAUST MUSEUM LA EXPANSION

100 THE GROVE DRIVE
LOS ANGELES, CA 90036

PLUMBING SCHEDULES

PROJECT NUMBER: 17009

P010

08/09/21 19:13:42

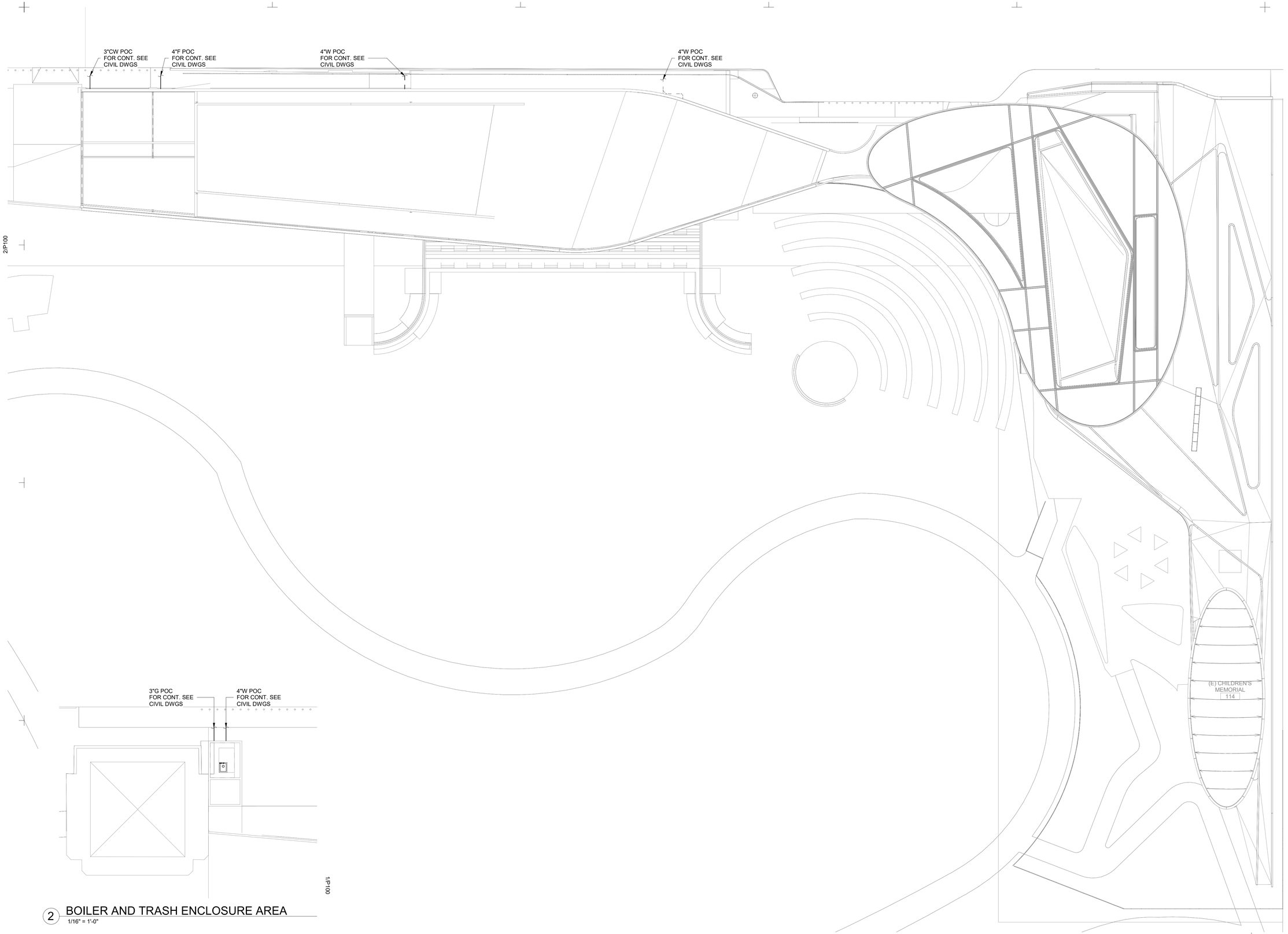

2 BOILER AND TRASH ENCLOSURE AREA
1/16" = 1'-0"

NOT FOR CONSTRUCTION

09.AUG.2021

ba
belzberg architects
2321 MAIN STREET
SANTA MONICA, CA 90405
310.453.9611
www.belzbergarchitects.com

ARUP
Arup North America Ltd.
900 Wilshire Boulevard,
19th Floor
Los Angeles CA 90017
Tel: 310 578 4400
www.arup.com

#	DESCRIPTION	DATE

HOLOCAUST
MUSEUM LA
EXPANSION

100 THE GROVE DRIVE
LOS ANGELES, CA 90036

PLUMBING SITE PLAN

PROJECT NUMBER: 17009

P100

08/09/21 19:13:47

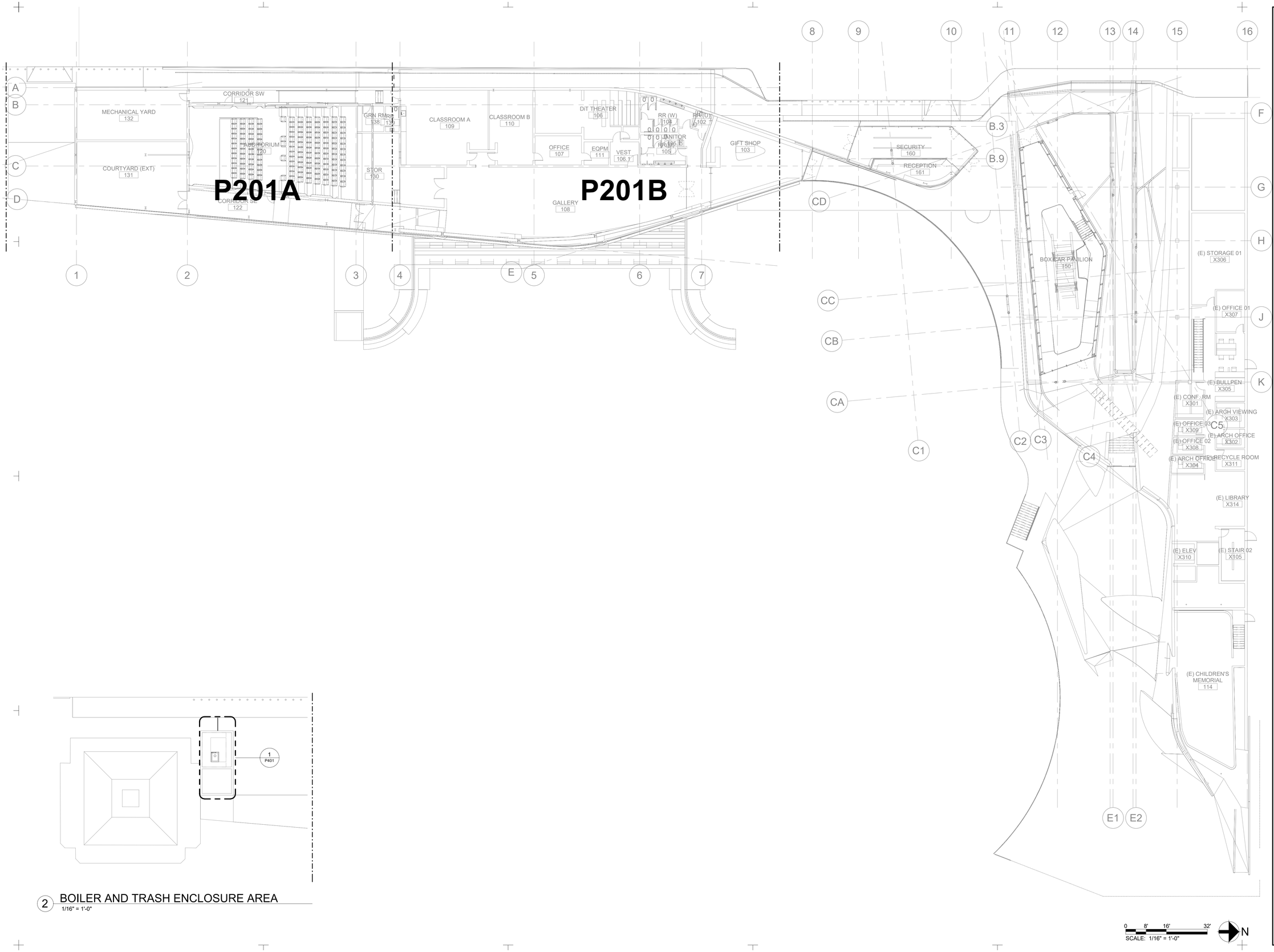

2 BOILER AND TRASH ENCLOSURE AREA
1/16" = 1'-0"

0 8' 16' 32'
SCALE: 1/16" = 1'-0"

N

NOT FOR CONSTRUCTION

09.AUG.2021

belzberg architects
2321 MAIN STREET
SANTA MONICA, CA 90405
310.453.9611
www.belzbergarchitects.com

ARUP
Arup North America Ltd.
900 Wilshire Boulevard,
19th Floor
Los Angeles CA 90017
Tel: 310 578 4400
www.arup.com

#	DESCRIPTION	DATE

HOLOCAUST MUSEUM LA EXPANSION

100 THE GROVE DRIVE
LOS ANGELES, CA 90036

PLUMBING GROUND FLOOR PLAN - OVERALL

PROJECT NUMBER: 17009

P201

08/09/21 19:13:54

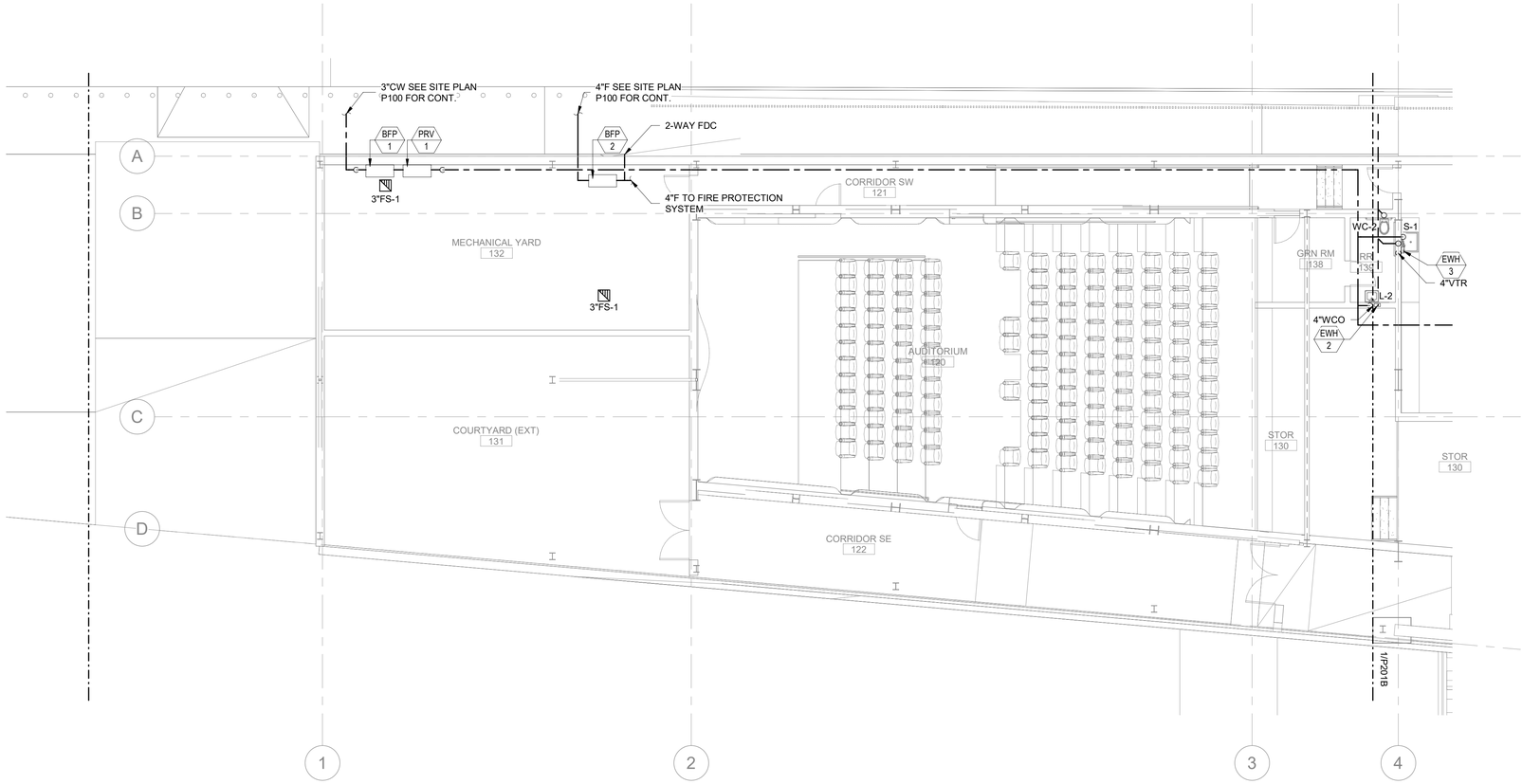

0 4' 8' 16'
SCALE: 1/8" = 1'-0"

N

NOT FOR CONSTRUCTION

09.AUG.2021

ba
belzberg architects
2321 MAIN STREET
SANTA MONICA, CA 90405
310.453.9611
www.belzbergarchitects.com

ARUP
Arup North America Ltd.
900 Wilshire Boulevard,
19th Floor
Los Angeles CA 90017
Tel: 310 578 4400
www.arup.com

#	DESCRIPTION	DATE

HOLOCAUST MUSEUM LA EXPANSION

100 THE GROVE DRIVE
LOS ANGELES, CA 90036

PLUMBING LEARNING CENTER GROUND FLOOR PLAN - SOUTH

PROJECT NUMBER: 17009

P201A

08/09/21 19:13:58

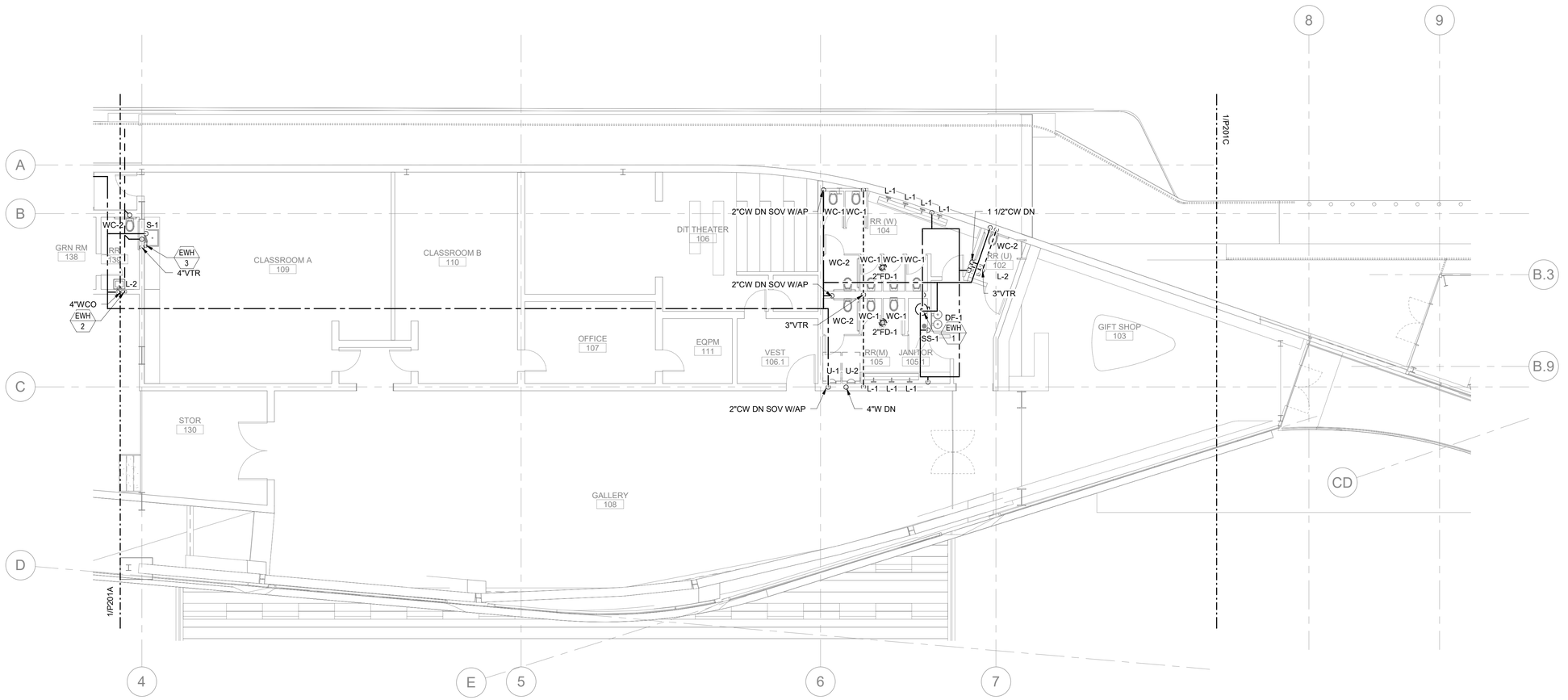

0 4' 8' 16'
SCALE: 1/8" = 1'-0"

N

NOT FOR CONSTRUCTION

09.AUG.2021

ba
belzberg architects
2321 MAIN STREET
SANTA MONICA, CA 90405
310.453.9611
www.belzbergarchitects.com

ARUP
Arup North America Ltd.
900 Wilshire Boulevard,
19th Floor
Los Angeles CA 90017
Tel: 310 578 4400
www.arup.com

#	DESCRIPTION	DATE

HOLOCAUST MUSEUM LA EXPANSION

100 THE GROVE DRIVE
LOS ANGELES, CA 90036

PLUMBING LEARNING CENTER GROUND FLOOR PLAN - NORTH

PROJECT NUMBER: 17009

P201B

08/09/21 19:14:01

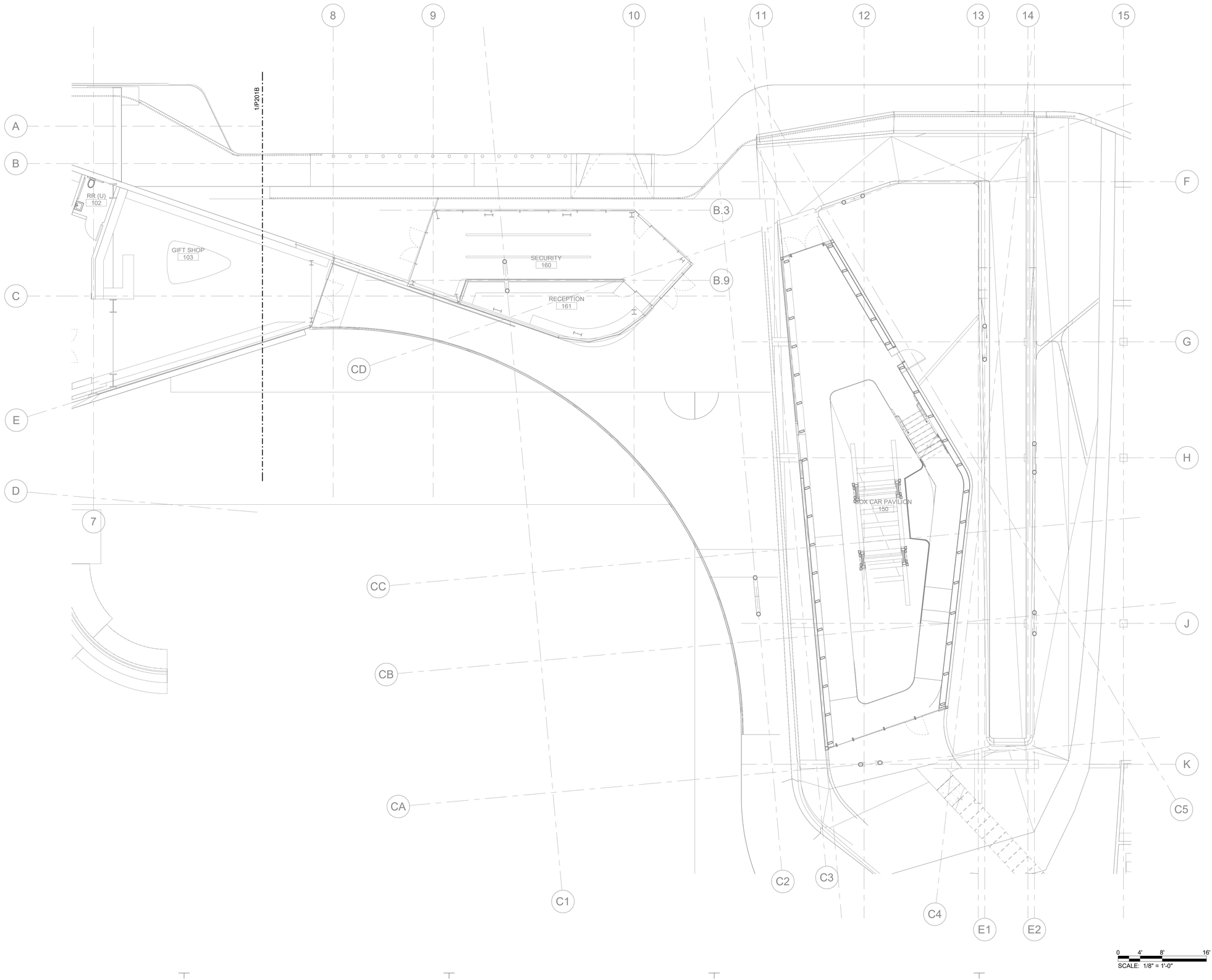

NOT FOR CONSTRUCTION

09.AUG.2021

ba
belzberg architects
2321 MAIN STREET
SANTA MONICA, CA 90405
310.453.9611
www.belzbergarchitects.com

ARUP
Arup North America Ltd.
900 Wilshire Boulevard,
19th Floor
Los Angeles CA 90017
Tel: 310 578 4400
www.arup.com

#	DESCRIPTION	DATE

HOLOCAUST
MUSEUM LA
EXPANSION

100 THE GROVE DRIVE
LOS ANGELES, CA 90036

PLUMBING BOXCAR
GROUND FLOOR PLAN

PROJECT NUMBER: 17009

P201C

08/09/21 19:14:05

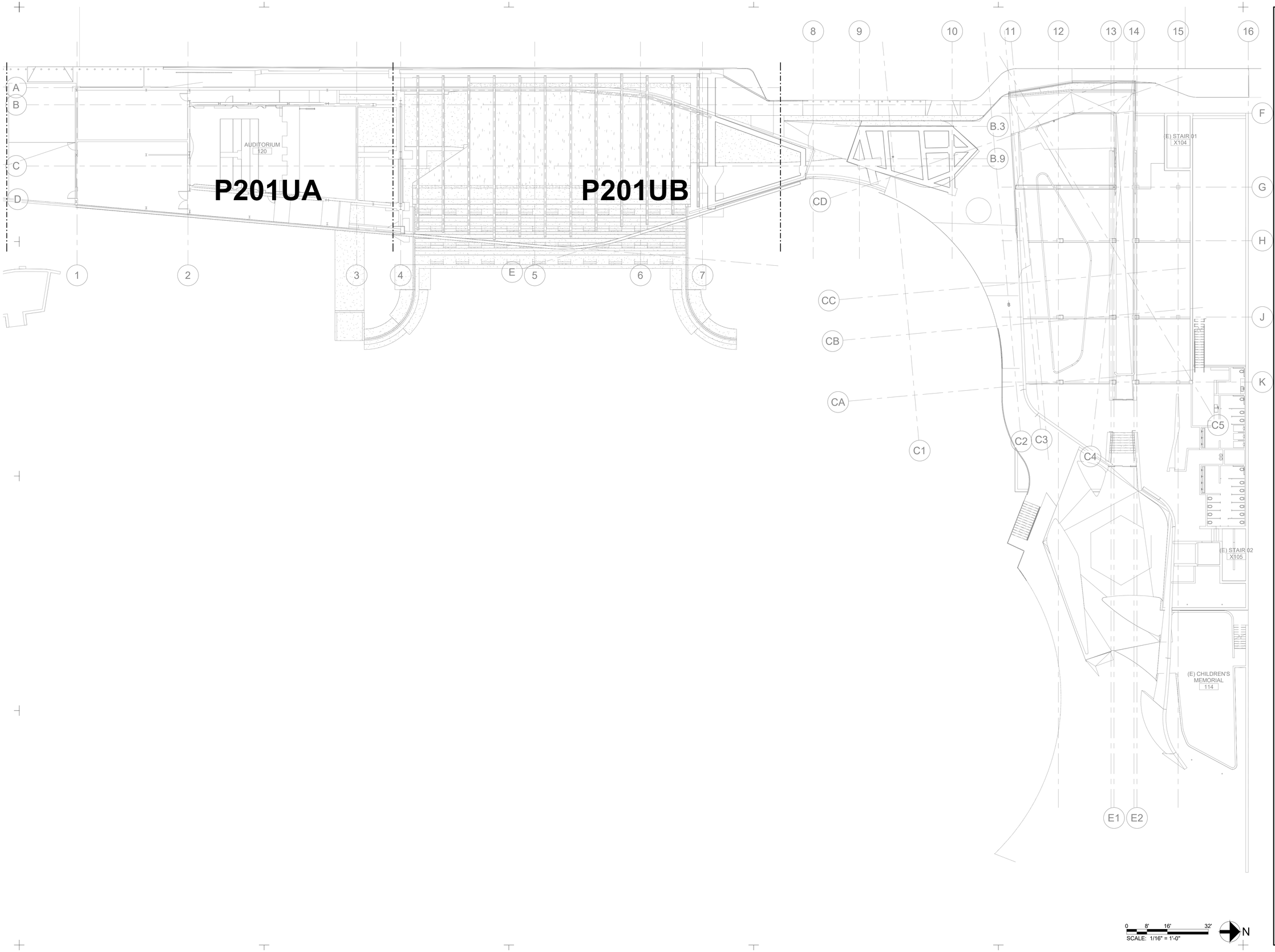

0 8' 16' 32'
SCALE: 1/16" = 1'-0"

N

NOT FOR CONSTRUCTION

09.AUG.2021

belzberg architects
2321 MAIN STREET
SANTA MONICA, CA 90405
310.453.9611
www.belzbergarchitects.com

ARUP
Arup North America Ltd.
900 Wilshire Boulevard,
19th Floor
Los Angeles CA 90017
Tel: 310 578 4400
www.arup.com

#	DESCRIPTION	DATE

HOLOCAUST MUSEUM LA EXPANSION

100 THE GROVE DRIVE
LOS ANGELES, CA 90036

PLUMBING UNDERGROUND PLAN - OVERALL

PROJECT NUMBER: 17009

P201U

08/09/21 19:14:09

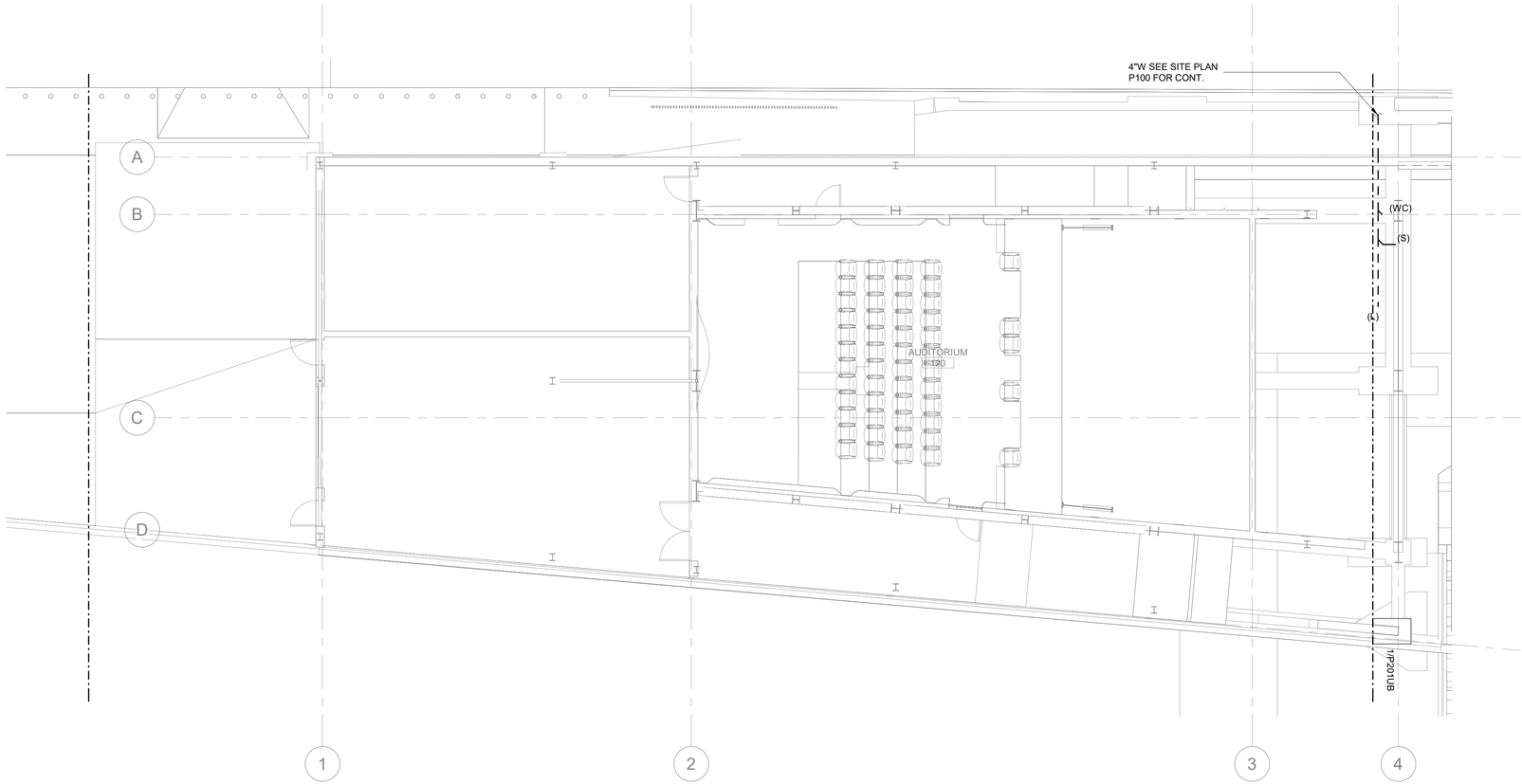

0 4' 8' 16'
SCALE: 1/8" = 1'-0"

N

NOT FOR CONSTRUCTION

09.AUG.2021

ba
belzberg architects
2321 MAIN STREET
SANTA MONICA, CA 90405
310.453.9611
www.belzbergarchitects.com

ARUP
Arup North America Ltd.
900 Wilshire Boulevard,
19th Floor
Los Angeles CA 90017
Tel: 310 578 4400
www.arup.com

#	DESCRIPTION	DATE

HOLOCAUST MUSEUM LA EXPANSION

100 THE GROVE DRIVE
LOS ANGELES, CA 90036

PLUMBING LEARNING CENTER UNDERGROUND PLAN - SOUTH

PROJECT NUMBER: 17009

P201UA

08/09/21 11:41:12

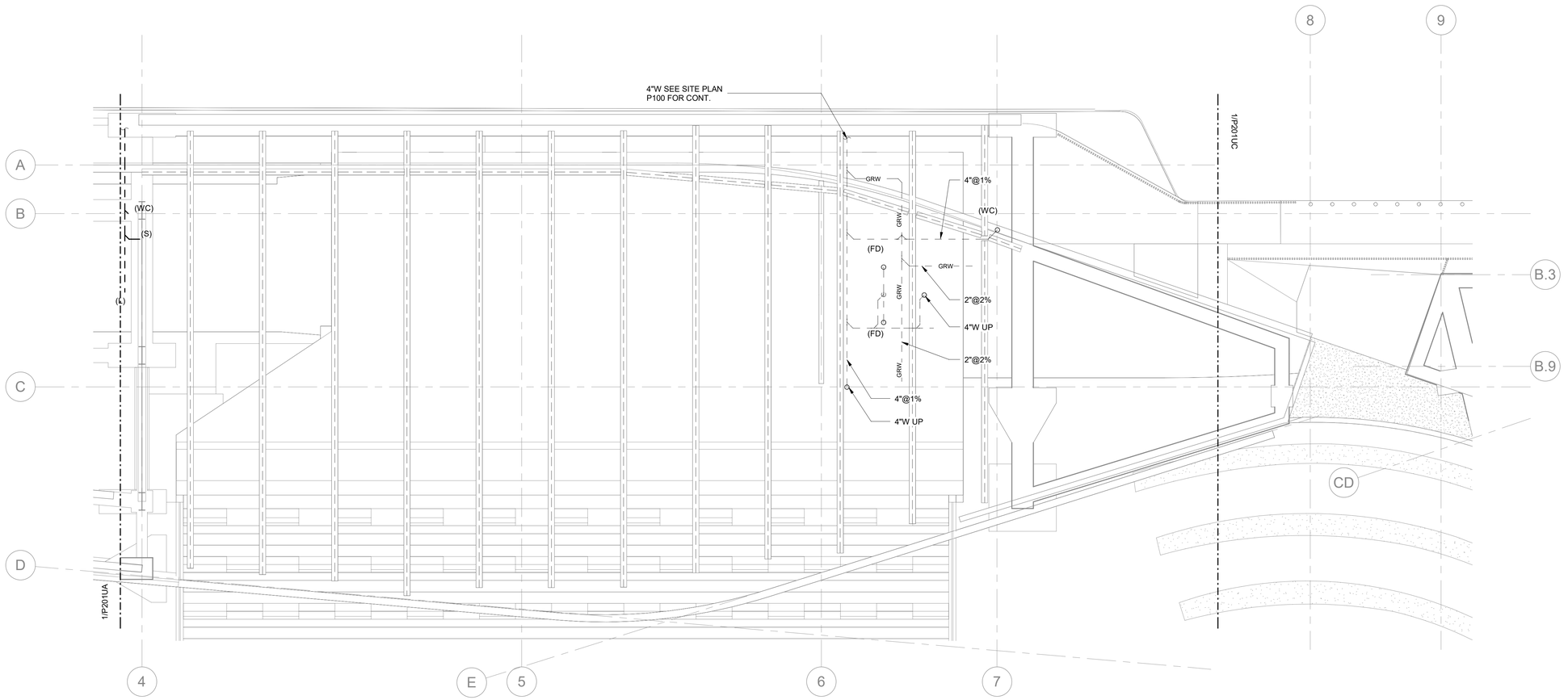

0 4' 8' 16'
SCALE: 1/8" = 1'-0"

N

NOT FOR CONSTRUCTION

09.AUG.2021

belzberg architects
2321 MAIN STREET
SANTA MONICA, CA 90405
310.453.9611
www.belzbergarchitects.com

ARUP
Arup North America Ltd.
900 Wilshire Boulevard,
19th Floor
Los Angeles CA 90017
Tel: 310 578 4400
www.arup.com

#	DESCRIPTION	DATE

HOLOCAUST MUSEUM LA EXPANSION

100 THE GROVE DRIVE
LOS ANGELES, CA 90036

PLUMBING LEARNING CENTER UNDERGROUND PLAN - NORTH

PROJECT NUMBER: 17009

P201UB

08/09/21 19:44:15

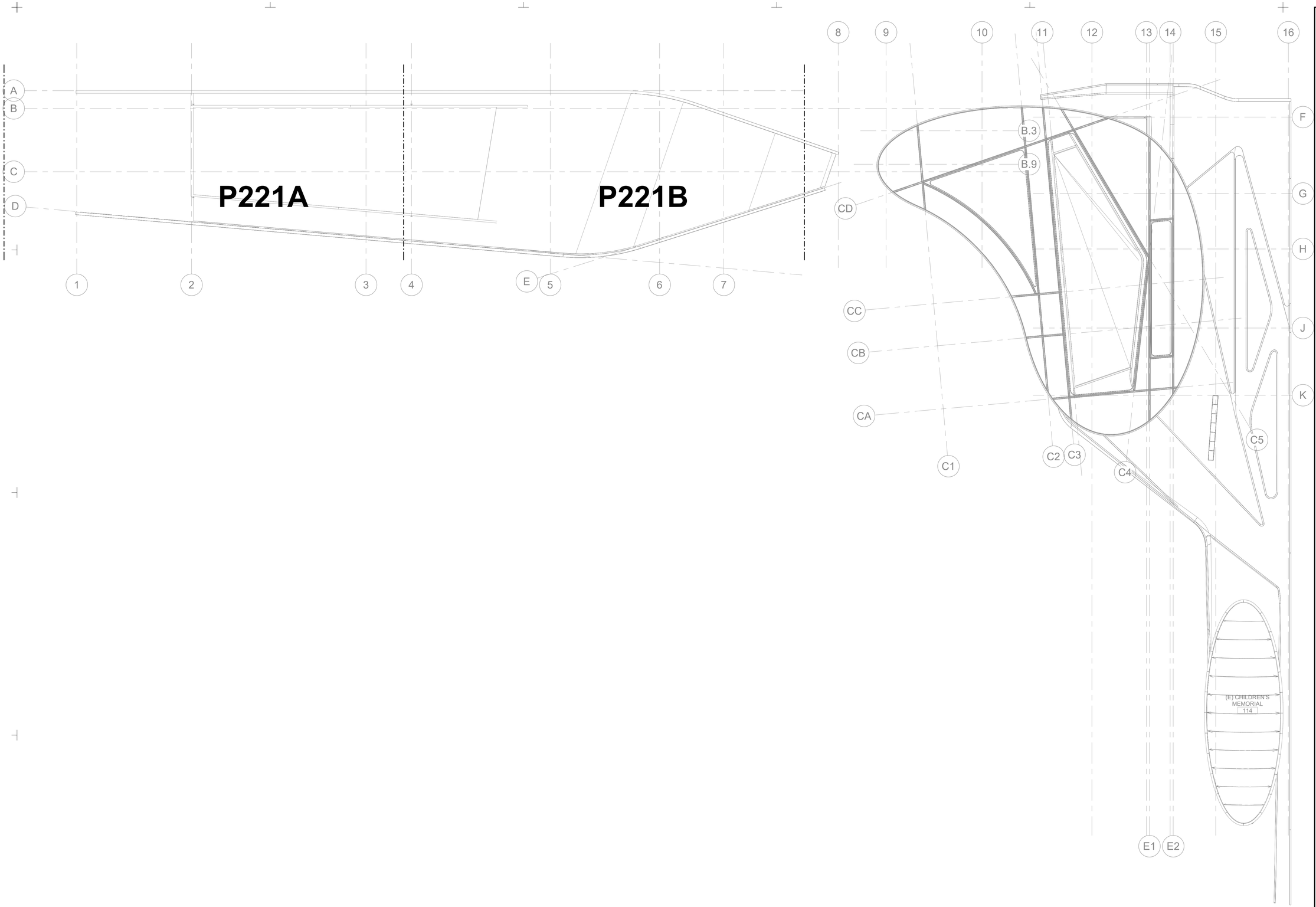

NOT FOR CONSTRUCTION

09.AUG.2021

ba
belzberg architects
2321 MAIN STREET
SANTA MONICA, CA 90405
310.453.9611
www.belzbergarchitects.com

ARUP
Arup North America Ltd.
900 Wilshire Boulevard,
19th Floor
Los Angeles CA 90017
Tel: 310 578 4400
www.arup.com

#	DESCRIPTION	DATE

HOLOCAUST MUSEUM LA EXPANSION

100 THE GROVE DRIVE
LOS ANGELES, CA 90036

PLUMBING ROOF LEVEL PLAN - OVERALL

PROJECT NUMBER: 17009

P221

08/09/21 19:14:18

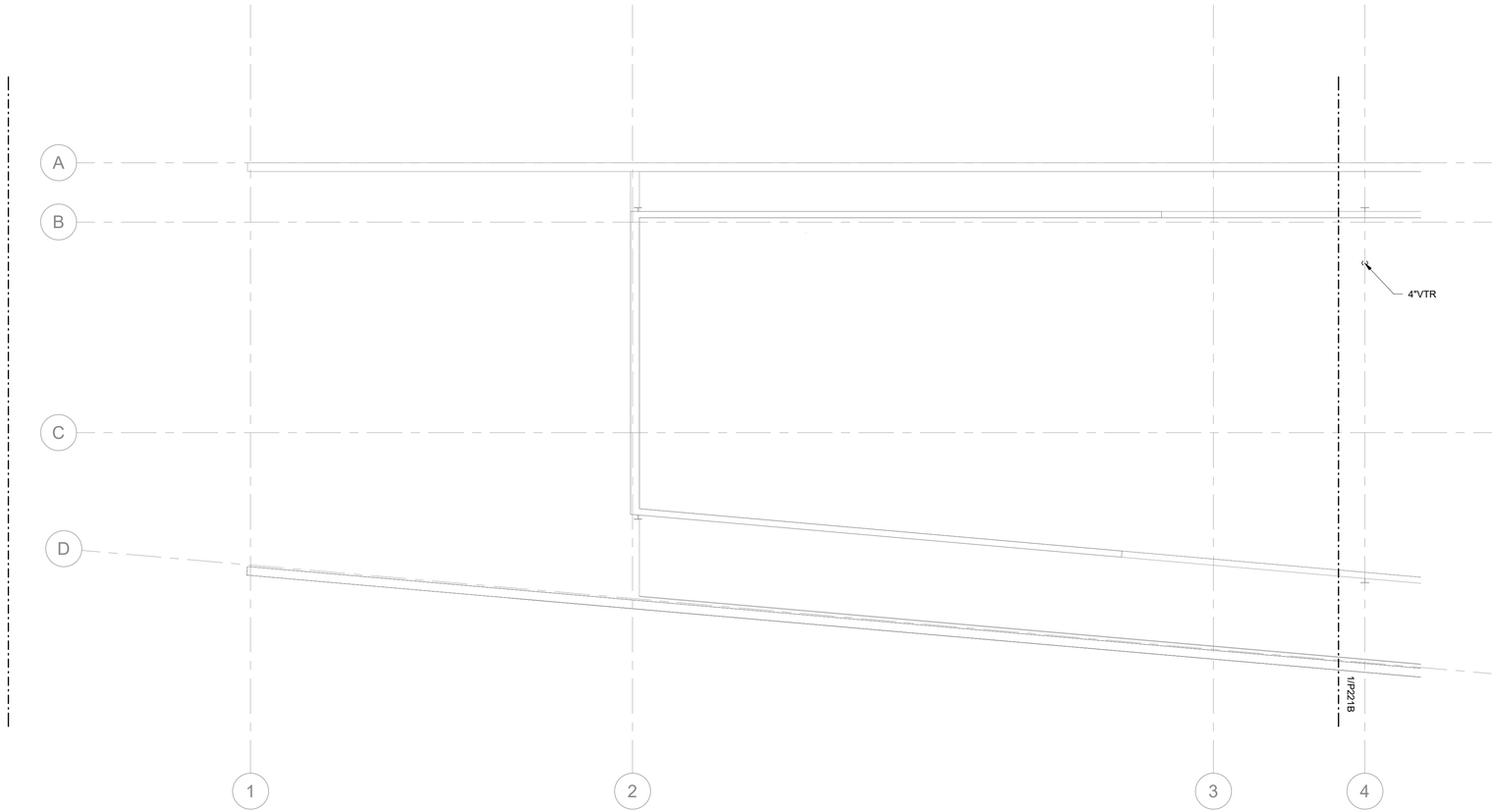

0 4' 8' 16'
SCALE: 1/8" = 1'-0"

N

NOT FOR CONSTRUCTION

09.AUG.2021

ba
belzberg architects
2321 MAIN STREET
SANTA MONICA, CA 90405
310.453.9611
www.belzbergarchitects.com

ARUP
Arup North America Ltd.
900 Wilshire Boulevard,
19th Floor
Los Angeles CA 90017
Tel: 310 578 4400
www.arup.com

#	DESCRIPTION	DATE

HOLOCAUST MUSEUM LA EXPANSION

100 THE GROVE DRIVE
LOS ANGELES, CA 90036

PLUMBING LEARNING CENTER ROOF LEVEL PLAN - SOUTH

PROJECT NUMBER: 17009

P221A

08/09/21 19:14:19

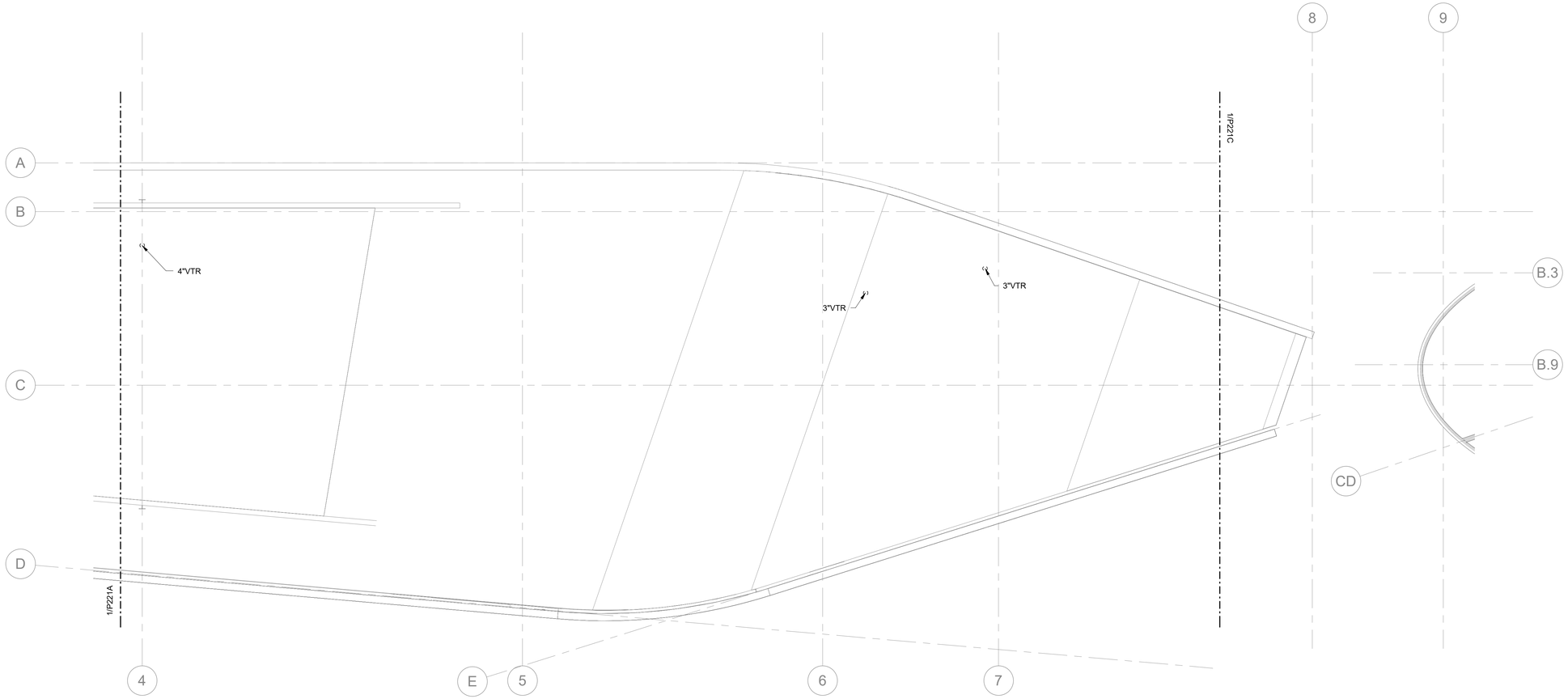

0 4' 8' 16'
SCALE: 1/8" = 1'-0"

N

NOT FOR CONSTRUCTION

09.AUG.2021

ba
belzberg architects
2321 MAIN STREET
SANTA MONICA, CA 90405
310.453.9611
www.belzbergarchitects.com

ARUP
Arup North America Ltd.
900 Wilshire Boulevard,
19th Floor
Los Angeles CA 90017
Tel: 310 578 4400
www.arup.com

#	DESCRIPTION	DATE

HOLOCAUST MUSEUM LA EXPANSION

100 THE GROVE DRIVE
LOS ANGELES, CA 90036

PLUMBING LEARNING CENTER ROOF LEVEL PLAN - NORTH

PROJECT NUMBER: 17009

P221B

08/09/21 19:14:20

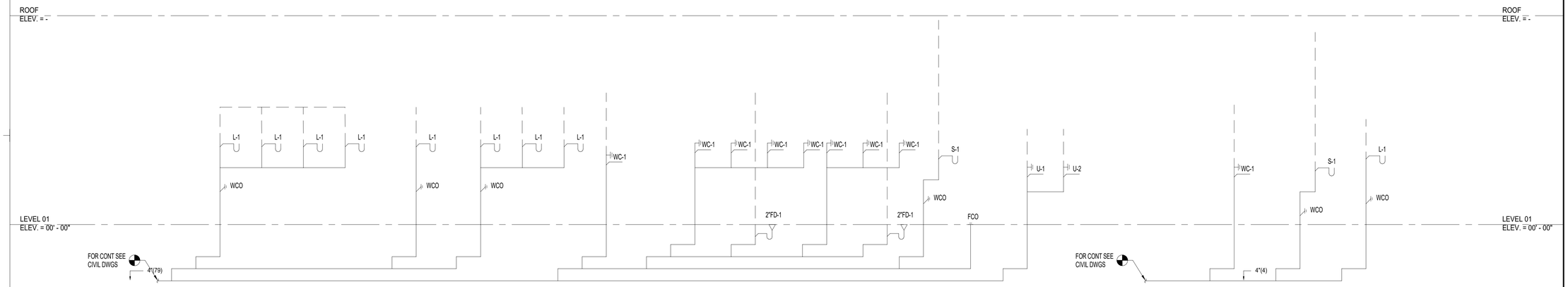

1 WASTE AND VENT RISER DIAGRAM

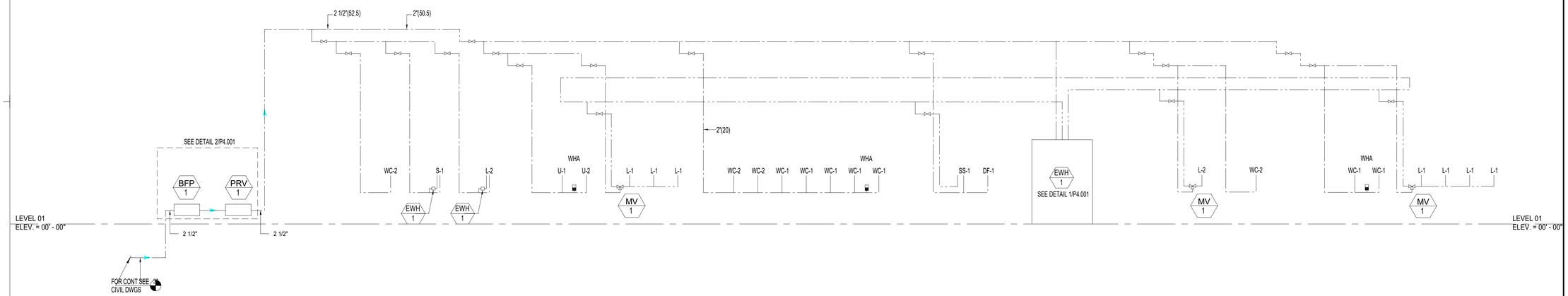

2 COLD AND HOT WATER RISER DIAGRAM

NOT FOR CONSTRUCTION

09.AUG.2021

belzberg architects

2321 MAIN STREET
SANTA MONICA, CA 90405
310.453.9611

www.belzbergarchitects.com

ARUP

Arup North America Ltd.
900 Wilshire Boulevard,
19th Floor
Los Angeles CA 90017
Tel: 310 578 4400
www.arup.com

#	DESCRIPTION	DATE

HOLOCAUST MUSEUM LA EXPANSION

100 THE GROVE DRIVE
LOS ANGELES, CA 90036

PLUMBING RISER DIAGRAMS

PROJECT NUMBER: 17009

P301

08/09/21 19:14:20

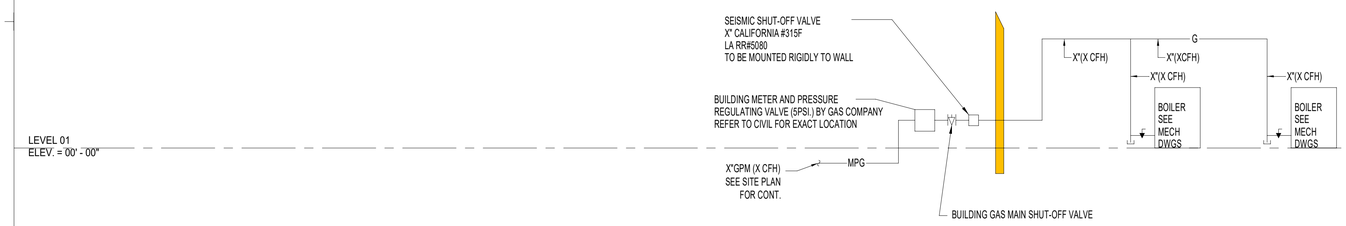

1 NATURAL GAS RISER DIAGRAM

TABLE 1216.2(1) CPC 2019 SCHEDULE 40 METALLIC PIPE (NFPA 54: TABLE 6.2(B))									GAS:	NATURAL		
									INLET PRESSURE:	LESS THAN 2 psi		
									PRESSURE DROP:	0.5 in. w.c.		
									SPECIFIC GRAVITY:	0.60		
NOMINAL (inch)	1/2	3/4	1	1 1/4	1 1/2	2	2 1/2	3	4	5	6	8
LENGHT (feet)	CAPACITY IN CUBIC FEET OF GAS PER HOUR (CFH)											
X	-	-	-	-	-	-	-	-	-	-	-	-

TDL FROM MAIN GAS REGULATOR TO FARTHEST BOILER - XX'

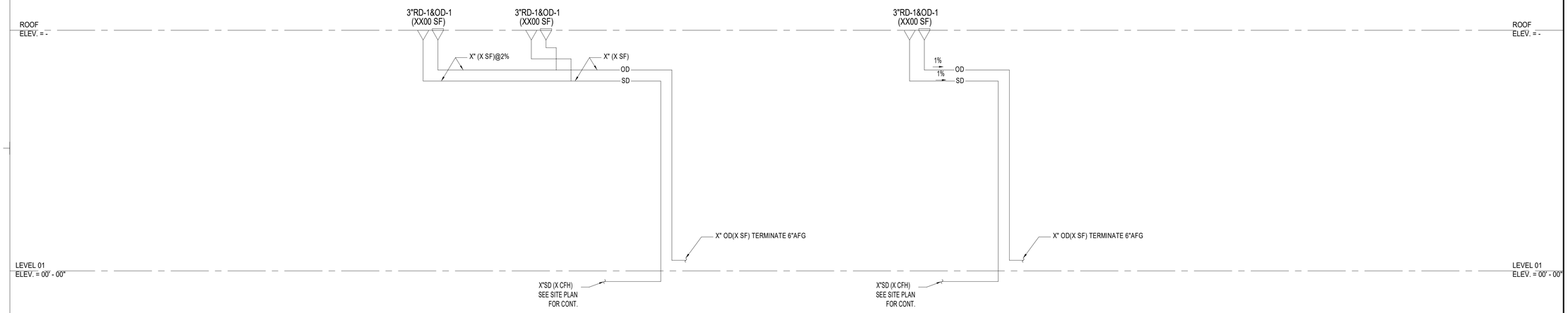

2 STORM AND OVERFLOW DRAIN RISER DIAGRAM

NOT FOR CONSTRUCTION

09.AUG.2021

ba
belzberg architects
2321 MAIN STREET
SANTA MONICA, CA 90405
310.453.9611
www.belzbergarchitects.com

ARUP
Arup North America Ltd.
900 Wilshire Boulevard,
19th Floor
Los Angeles CA 90017
Tel: 310 578 4400
www.arup.com

#	DESCRIPTION	DATE

HOLOCAUST
MUSEUM LA
EXPANSION

100 THE GROVE DRIVE
LOS ANGELES, CA 90036

PLUMBING RISER
DIAGRAMS

PROJECT NUMBER: 17009

P302

08/09/21 19:14:21

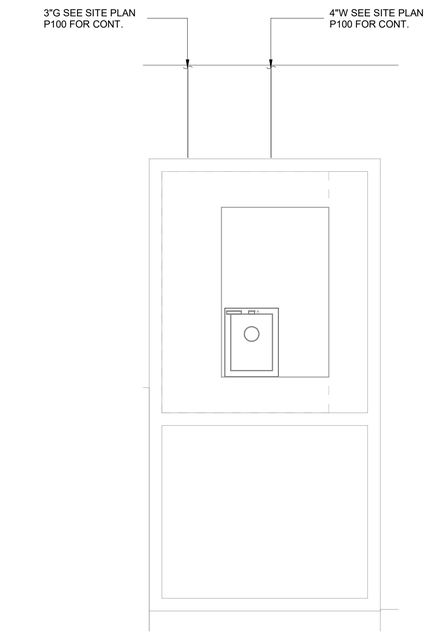

1 LEVEL 01 - BOILER ROOM
1/4" = 1'-0"

NOT FOR CONSTRUCTION

09.AUG.2021

ba
belzberg architects
2321 MAIN STREET
SANTA MONICA, CA 90405
310.453.9611
www.belzbergarchitects.com

ARUP
Arup North America Ltd.
900 Wilshire Boulevard,
19th Floor
Los Angeles CA 90017
Tel: 310 578 4400
www.arup.com

#	DESCRIPTION	DATE

HOLOCAUST MUSEUM LA EXPANSION

100 THE GROVE DRIVE
LOS ANGELES, CA 90036

PLUMBING ENLARGED PLAN

PROJECT NUMBER: 17009

P401

09/09/21 19:14:21

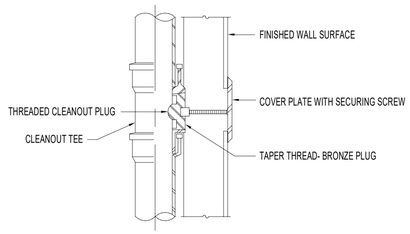

6 P401 WALL CLEANOUT DETAIL

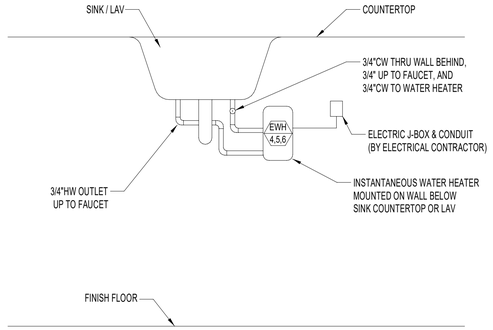

3 P401 INSTANTANEOUS WATER HEATER DETAIL (DUAL SUPPLY)

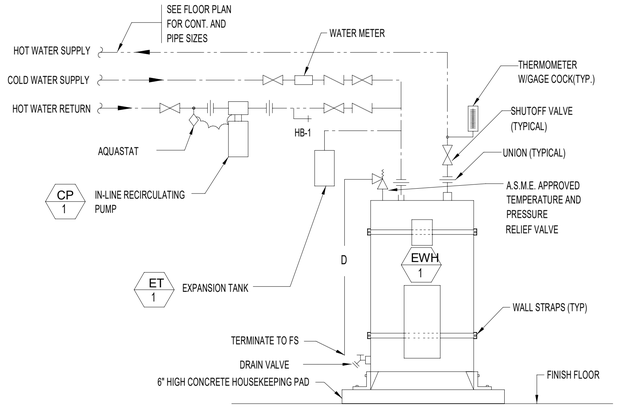

1 P401 ELECTRIC WATER HEATER DETAIL EWH-1

7 P401 CONDENSATE CONNECTION TO SINK TAILPIPE DETAIL

4 P401 INSTANTANEOUS WATER HEATER DETAIL (SINGLE SUPPLY)

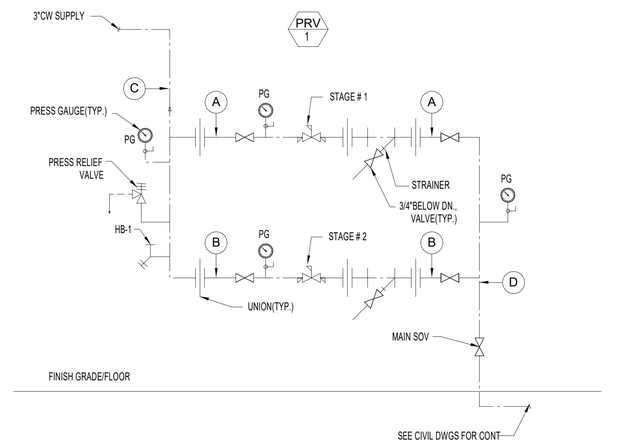

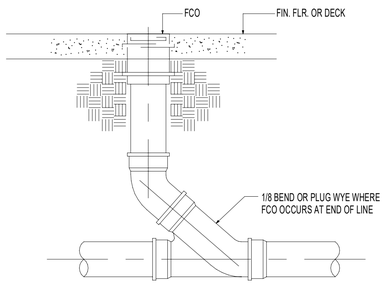

5 P401 FLOOR CLEANOUT DETAIL

2 P401 PRESSURE REDUCING VALVE PRV-1 DETAIL

PRV SCHEDULE

SYMBOL	SERVICE	LOCATION	STAGE	PRV SIZE	GPM	SET PRESS. PSI	PRESS. LOSS PSI	PIPE SIZES A	B	C	D	REMARKS
PRV	DOMESTIC WATER	OUTSIDE	# 1	1"	15	77	6	1"	-	3"	3"	WILKINS 510XLYSBR
			# 2	2"	65	75	7	-	2"			

8 P401 -

NOT FOR CONSTRUCTION

09.AUG.2021

belzberg architects
2321 MAIN STREET
SANTA MONICA, CA 90405
310.453.9611
www.belzbergarchitects.com

ARUP
Arup North America Ltd.
900 Wilshire Boulevard,
19th Floor
Los Angeles CA 90017
Tel: 310 578 4400
www.arup.com

#	DESCRIPTION	DATE

HOLOCAUST MUSEUM LA EXPANSION

100 THE GROVE DRIVE
LOS ANGELES, CA 90036

PLUMBING DETAILS

PROJECT NUMBER: 17009

P601

08/09/21 19:14:22

LIGHTING

SYMBOL	DESCRIPTION
	CEILING MOUNTED LIGHTING FIXTURE AND OUTLET BOX. - SHADED AREA FIXTURE ON EMERGENCY CIRCUIT
	WALL MOUNTED LIGHTING FIXTURE AND OUTLET BOX. - SHADED AREA FIXTURE ON EMERGENCY CIRCUIT
	CEILING/WALL EXIT LIGHT AND OUTLET BOX, LED TYPE, SELF CONTAINED, WITH BATTERY PACK. - SHADED AREA INDICATED ILLUMINATED FACE(S) - ARROW INDICATES DIRECTION
	EMERGENCY UNIT EQUIPMENT, 90 MINUTE BATTERY PACK, CHARGER AND TEST SWITCH

NOTE: SEE LIGHT FIXTURE SCHEDULE AND SPECIFICATIONS FOR COMPLETE FIXTURE DESCRIPTION.

WIRING DEVICES

SYMBOL	DESCRIPTION
$S^{T}_{a,b}$	LINE VOLTAGE SWITCH - LOWER CASE LETTER DENOTES SWITCHING ZONES - "T" DENOTES SWITCH TYPE: MC - MOMENTARY CONTACT D - DIMMER WP - WEATHER PROOF XP - EXPLOSION PROOF
$S_{a,b}$	LOW VOLTAGE SWITCH
DT	DUAL TECHNOLOGY OCCUPANCY SENSOR, CEILING MOUNTED
DT	DUAL TECHNOLOGY WALL SWITCH WITH INTEGRAL OCCUPANCY SENSOR
	PHOTOCELL CONTROLLER, CEILING MOUNTED
	PHOTOCELL CONTROLLER, WALL MOUNTED
LC	LIGHTING CONTACTOR
TC	TIME CLOCK
RC	REMOTE CONTROL SWITCH
	PUSH BUTTON
X +X"	LETTER DESIGNATION ON RECEPTACLES: A = ARC FAULT CIRCUIT INTERRUPTER G = GROUND FAULT CIRCUIT INTERRUPTER IG = ISOLATED GROUND WP = WEATHER PROOF WITH 'GFCI' S = SAFETY CT = ATOVE COUNTER CR = CRITICAL EQ = EQUIPMENT LS = LIFE SAFETY +X" = INDICATES MOUNTING HEIGHT SHADING = INDICATES RECEPTACLE ON EMERGENCY
	SIMPLEX RECEPTACLE WALL MOUNTED, +18" AFF, UON
	DUPLEX RECEPTACLE WALL MOUNTED, +18" AFF, UON
	QUAD RECEPTACLE WALL MOUNTED, +18" AFF, UON
	SPECIAL RECEPTACLE WALL MOUNTED, +18" AFF, UON
	SIMPLEX RECEPTACLE CEILING MOUNTED
	DUPLEX RECEPTACLE CEILING MOUNTED
	QUAD RECEPTACLE CEILING MOUNTED
	SPECIAL RECEPTACLE CEILING MOUNTED
	SIMPLEX RECEPTACLE FLUSH FLOOR MOUNTED
	DUPLEX RECEPTACLE FLUSH FLOOR MOUNTED
	QUAD RECEPTACLE FLUSH FLOOR MOUNTED
	SPECIAL RECEPTACLE FLUSH FLOOR MOUNTED
	POKE THROUGH FLOOR BOX WITH OUTLETS AS SPECIFIED
	ACCESS FLOOR BOX WITH OUTLETS AS SPECIFIED
	JUNCTION BOX RECESSED WALL MOUNTED
J	JUNCTION BOX RECESSED CEILING MOUNTED
J	JUNCTION BOX RECESSED FLUSH FLOOR MOUNTED

POWER

SYMBOL	DESCRIPTION
4x AF	SAFETY DISCONNECT SWITCH, 3 POLE UON A: 30A UNFUSED AF: 30A FUSED B: 60A UNFUSED BF: 60A FUSED C: 100A UNFUSED CF: 100A FUSED D: 200A UNFUSED DF: 200A FUSED E: 400A UNFUSED EF: 400A FUSED - '4x' DENOTES NEMA ENCLOSURE IF INDICATED
4x CB 225	DISCONNECT SWITCH - NUMERICAL DENOTES TRIP SIZE - '4x' DENOTES NEMA ENCLOSURE IF INDICATED
	MOTOR CONTROL EQUIPMENT AND CONNECTION TO CONTROLLED MOTOR(S). CONTROLLER IS MOUNTED AGAINST AN ADJACENT WALL OR OTHERWISE REMOTE FROM THE MOTOR. SEE MOTOR EQUIPMENT SCHEDULE(S) FOR CIRCUITING, TYPE OF CONTROL EQUIPMENT, QUANTITY OF MOTORS CONNECTED TO CONTROLLER, AND OTHER DETAILS. CONDUCTOR SIZE BETWEEN CONTROLLER AND MOTOR SHALL MATCH THE UPSTREAM OF THE CONTROLLER UNLESS NOTED OTHERWISE ON THE SCHEDULE.
	MOTOR CONTROL EQUIPMENT AND CONNECTION TO CONTROLLED MOTOR(S). CONTROLLER IS EITHER INTEGRAL TO THE EQUIPMENT OR MOUNTED DIRECTLY ONTO THE EQUIPMENT. SEE MOTOR EQUIPMENT SCHEDULE(S) FOR CIRCUITING, TYPE OF CONTROL EQUIPMENT, QUANTITY OF MOTORS CONNECTED TO CONTROLLER, AND OTHER DETAILS. CONDUCTOR SIZE BETWEEN CONTROLLER AND MOTOR SHALL MATCH THE UPSTREAM OF THE CONTROLLER UNLESS NOTED OTHERWISE ON THE SCHEDULE.
PB	PULLBOX
T4	TRANSFORMER, SEE SCHEDULE FOR RATING
ATS	AUTOMATIC TRANSFER SWITCH, SEE RISER DIAGRAM FOR RATING
R 6	RELAY - NUMERAL DENOTES NUMBER OF POLES
	SURFACE MOUNTED PANELBOARD
	FLUSH MOUNTED PANELBOARD
	FLOOR MOUNTED DISTRIBUTION/SWITCHBOARD

RACEWAYS

	CONDUIT AND WIRE, HASH MARKS INDICATE NUMBER OF WIRES. # HASH MARKS INDICATES 3#12+1#10N+ 1#12G IN 3/4" CONDUIT UON.
	CONDUIT AND WIRE HOMERUN. CONTINUOUS RUN TO MCC, PANELBOARD, SWITCHBOARD OR EQUIPMENT CABINET.
	CONDUIT AND WIRE RUN IN WALL OR CEILING SPACE, OR RUN EXPOSED IN UNFINISHED SPACE.
	CONDUIT AND WIRE RUN CONCEALED IN SLAB, UNDER SLAB OR UNDERGROUND
	CONDUIT AND WIRE RUN EXPOSED ON WALL OR CEILING IN FINISHED SPACE.
	FLEXIBLE CONNECTION
	CONDUIT TURNING UP
	CONDUIT TURNING DOWN
	CONDUIT CAPPED

MISCELLANEOUS

SYMBOL	DESCRIPTION
P380D	FEEDER SIZE, SEE FEEDER SCHEDULE
#	REFERENCE NOTE
E-3 A	DETAIL REFERENCE: - DETAIL DESIGNATION - SHEET NUMBER REFERENCE
EF 1	EQUIPMENT REFERENCE. COORDINATE EQUIPMENT WITH MECHANICAL/PLUMBING TRADES. SEE MECHANICAL/PLUMBING DRAWINGS FOR LOCATIONS.

SINGLE LINE DIAGRAM

SYMBOL	DESCRIPTION
PANEL	PANELBOARD, SEE PANEL SCHEDULE FOR RATING.
	FEEDER
BW	BUSWAY
LSI TRIP	MOLDED CASE CIRCUIT BREAKER: - 'TEXT' DENOTES CB ACCESSORIES ST, ET. GFP, EO, LSI TRIP FUNCTIONS - NUMERICAL DENOTES TRIP SIZE
GFP TRIP	LOW VOLTAGE DRAW OUT CIRCUIT BREAKER: - 'TEXT' DENOTES CB ACCESSORIES - NUMERICAL DENOTES TRIP SIZE
GFP FUSE	LOW VOLTAGE FUSE/SWITCH UNIT - 'TEXT' DENOTES FUSE ACCESSORIES ST, GFR, EO, LO, LOCK OUT PROVISIONS - NUMERICAL DENOTES FUSE SIZE
GFP FUSE	MEDIUM VOLTAGE DRAWOUT FUSE/SWITCH UNIT - 'TEXT' DENOTES FUSE ACCESSORIES - NUMERICAL DENOTES FUSE SIZE
52	MEDIUM VOLTAGE DRAW OUT CIRCUIT BREAKER WITH INTEGRAL TRIP UNIT
SA 12KV	INTERMEDIATE CLASS MOV SURGE ARRESTER - NUMERICAL DENOTES ARRESTOR RATING
ST TRIP	ENCLOSED CIRCUIT BREAKER - 'TEXT' DENOTES CB ACCESSORIES - NUMERICAL DENOTES TRIP SIZE
ST TRIP	ENCLOSED SAFETY DISCONNECT SWITCH - 'TEXT' DENOTES FUSE ACCESSORIES - NUMERICAL DENOTES SWITCH SIZE
	ENCLOSED FUSED DISCONNECT SWITCH - 'TEXT' DENOTES FUSE ACCESSORIES - NUMERICAL DENOTES SWITCH SIZE
N E ATS-# CONN AMPS L	AUTOMATIC TRANSFER SWITCH
ATS-# CONN AMPS	AUTOMATIC TRANSFER SWITCH W/BYPASS ISOLATION
G	GENERATOR
	MOTOR
KI	KEY INTERLOCK
51	RELAY NUMERICAL INDICATES TYPE
M	UTILITY METER
M V A	DIGITAL MULTIFUNCTION METER WITH CURRENT/POTENTIAL TRANSFORMER AS REQUIRED
M	DIGITAL ENERGY METER
200/5	CURRENT TRANSFORMER: - '200/5' DENOTES CT RATIO IF INDICATED
1	POTENTIAL TRANSFORMER: - NUMERICAL DENOTES QUANTITY OF FUSES
	INVERTER
	RECTIFIER
	BATTERY
	GROUND CONNECTION
	TRANSFORMER WITH PRIMARY AND SECONDARY CONNECTIONS AS INDICATED ON RISER DIAGRAM.

ABBREVIATIONS

SYMBOL	DESCRIPTION
A, AMP	AMPERE
AIC	AMPS INTERRUPTING CAPACITY
AC	ALTERNATING CURRENT
AFCI	ARC FAULT CIRCUIT INTERRUPTER
AFF	ABOVE FINISHED FLOOR
ATC	AUTOMATIC TEMPERATURE CONTROL
ATS	AUTOMATIC TRANSFER SWITCH
BAS	BUILDING AUTOMATION SYSTEM
BMS	BUILDING MANAGEMENT SYSTEM
BFG	BELOW FINISHED GRADE
C, CDT	CONDUIT
CB	CIRCUIT BREAKER
CH	CABINET HEIGHT
CKT	CIRCUIT
C.O., CO	CONDUIT ONLY
CONFIG.	CONFIGURATION
C	CENTERLINE
CONV	CONVENIENCE
CM	CONSTRUCTION MANAGER
DDC	DIGITAL DATA CONTROL
DWG	DRAWING
E.C.	ELECTRICAL CONTRACTOR
ELEC	ELECTRICAL
EM	EMERGENCY
EMT	ELECTRICAL METALLIC TUBING
E.O.	ELECTRICALLY OPERATED 'ON-OFF'
EQ	EQUAL
EWC	ELECTRIC WATER COOLER
FA	FIRE ALARM
FAI	FURNISH AND INSTALL
FBO	FURNISHED BY OTHERS
FS	FIRE SHUTTER/DOOR
FLA	FULL LOAD AMPS
FSD	FIRE SMOKE DAMPER
G, GND	GROUND
GEN	GENERATOR
GFCI	GROUND FAULT CIRCUIT INTERRUPTER
HC	HUNG CEILING
HID	HIGH INTENSITY DISCHARGE
HOA	HAND-OFF-AUTOMATIC
HP	HORSE POWER
IBEC	INSTALLED BY ELECTRICAL CONTRACTOR
IG	ISOLATED GROUND
JB,J	JUNCTION BOX
KVA	KILO VOLT- AMPERE
KW	KILO WATT
KWH	KILO WATT HOUR
LC	LOCK & COVER
LCP	LIGHTING CONTROL PANEL
LTG	LIGHTING
LV	LOW VOLTAGE
LVR	LOW VOLTAGE RELAY
MCC	MOTOR CONTROL CENTER
MCP	MOTOR CONTROL PANEL
MER	MECHANICAL EQUIPMENT ROOM
MFRR	MANUFACTURER
MIN	MINIMUM
MLO	MAIN LUGS ONLY
MSB	MAIN SWITCHBOARD
MTD	MOUNTED
N	NEUTRAL
NA, N/A	NOT APPLICABLE
NEMA	NATIONAL ELECTRICAL MANUFACTURERS ASSOCIATION
N.C.	NORMALLY CLOSED
NIC	NOT IN CONTRACT
#	NUMBER
N.O.	NORMALLY OPEN
NTS	NOT TO SCALE
OC	ON CENTER
P	POLES
PB	PULL BOX
PFC	POWER FACTOR CORRECTION
PH, ø	PHASE
PNL	PANEL
PVC	POLYVINYL CHLORIDE
PWR	POWER
RC	REHEAT COIL
RECPT, REC	RECEPTACLE
RM	ROOM
SG	SIGNAGE
SHT	SHEET
SPEC	SPECIFICATIONS
SPDT	SINGLE POLE DOUBLE THROW
SPST	SINGLE POLE SINGLE THROW
SS	SURGE SUPPRESSION
SW	SWITCH
SWBD	SWITCHBOARD
SWGR	SWITCHGEAR
TC	TIME CLOCK
TYP	TYPICAL
UG	UNDERGROUND
UON, U.O.N.	UNLESS OTHERWISE NOTED
UPS	UNINTERRUPTIBLE POWER SUPPLY
UNF	UNFUSED
V	VOLT
VA	VOLT-AMPERES
VPI	VACUUM PRESSURE IMPREGNATION
VT	VAPOR TIGHT
W	WATT
WP	WEATHER PROOF
XFMR	TRANSFORMER
XP	EXPLOSION PROOF

GENERAL NOTES

1. ALL MATERIALS AND WORKMANSHIP SHALL CONFORM TO THE CALIFORNIA CODE OF REGULATIONS (CCR) AND THE ELECTRICAL CODE BASED ON 2019 CALIFORNIA ELECTRICAL CODE (BASED ON 2017 NATIONAL ELECTRICAL CODE) WITH LA CITY AMENDMENTS, AND 2018 UCLA MEP CAMPUS STANDARDS.
2. ALL PANELS, SWITCHES, ETC. SHALL HAVE SUFFICIENT GUTTER SPACE AND LUGS IN COMPLIANCE WITH UL AND ELECTRICAL CODE REQUIREMENTS TO ACCOMMODATE CONDUCTORS SHOWN.
3. WHERE WIRE SIZES ARE INDICATED ON PLANS FOR INDIVIDUAL HOMERUNS, THE WIRE SIZE INDICATED SHALL APPLY TO THE COMPLETE CIRCUIT, UNLESS OTHERWISE NOTED.
4. CONTRACTOR SHALL VERIFY THE EXACT LOCATION OF MECHANICAL, PLUMBING AND ALL OTHER EQUIPMENT REQUIRING ELECTRICAL CONNECTION PRIOR TO ANY WORK, FIELD VERIFYING ALL CABLE LENGTHS PRIOR TO ORDER AND INSTALLATION.
5. CONTRACTOR SHALL EXTEND WIRING FROM ALL JUNCTION BOXES, SWITCHES, ETC. AND MAKE FINAL CONNECTION AS REQUIRED TO ALL BUILDING EQUIPMENT REQUIRING ELECTRICAL CONNECTIONS.
6. ALL MOUNTING HEIGHTS SHOWN ARE TO CENTER LINE OF OUTLET OR DEVICE AND SHALL APPLY UNLESS INDICATED OTHERWISE. REFER TO ARCHITECTURAL DOCUMENTS FOR FINAL SETTING OUT OF DEVICES.
7. DRAWINGS ARE DIAGRAMMATIC AND INDICATE GENERAL ARRANGEMENT OF SYSTEMS AND WORK INCLUDED. FOLLOW DRAWINGS IN LAYING OUT WORK AND CHECK DRAWINGS OF OTHER TRADES RELATING TO WORK TO VERIFY SPACE IN WHICH WORK WILL BE INSTALLED. MAINTAIN HEADROOM AND MINIMUM CODE REQUIRED WORKING CLEARANCES AT ALL TIMES.
8. LOCATION OF LOCAL WALL SWITCHES ARE SUBJECT TO MODIFICATIONS. AT OR NEAR DOORS INSTALL SWITCHES ON SIDE OPPOSITE TO DOOR HINGES. VERIFY FINAL HINGE LOCATION IN FIELD PRIOR TO ANY WORK.
9. CONTRACTOR SHALL COORDINATE THE LOCATION OF ALL WALL OUTLET BOXES FOR SWITCHES, STROBE/HORNS, STROBES, FIRE ALARM PULL STATIONS, RECEPTACLES ETC. WITH TACK BOARDS, CABINETS, FURNITURE, EQUIPMENT AND ETC. TO AVOID CONFLICT.
10. WHERE ELECTRIC MOTORS OR HEATERS ARE INSTALLED IN HUNG CEILING, PROVIDE DISCONNECT SWITCH IN HUNG CEILING WITHIN REACH FROM ACCESS POINT AND WITHIN SIGHT OF THE MOTOR.
11. PROVIDE APPROVED EXPANSION FITTINGS AND/OR LIQUID TIGHT FLEXIBLE CONDUITS WHERE RACEWAY CROSSES BUILDING EXPANSION/SEISMIC JOINTS.
12. PROVIDE PULL WIRE IN EACH RACEWAY RUN OVER 10 FEET IN LENGTH, IN WHICH PERMANENT WIRING IS NOT INSTALLED.
13. ELECTRICAL ROOMS HAVING A TRANSFORMER(S) RATED 112.5KVA OR ABOVE SHALL BE PROVIDED WITH 1-HOUR FIRE-RATED ENCLOSURE.
14. SEE MECHANICAL AND PLUMBING DRAWINGS AND SPECIFICATIONS FOR ADDITIONAL CONNECTION REQUIREMENTS TO CONTROL PANELS AND TRANSFORMERS, 120V FOR CONTROL SYSTEM, EP AND PE SWITCHES, TIME CLOCK, VALVES, STATS, RELAYS, VAV'S, FIRE SMOKE DAMPERS (FSD), DUCT SMOKE DETECTOR LOCATIONS, ETC. CONTRACTOR SHALL VERIFY FINAL CONTROL WIRING REQUIREMENTS WITH DIVISIONS 23 AND 25 PRIOR TO ANY WORK AND PROVIDE ALL NECESSARY WIRING, DEVICES AND CONNECTIONS AS REQUIRED.
15. ALL EXTERIOR ELECTRICAL DEVICES AND EQUIPMENT EXPOSED TO OUTSIDE ENVIRONMENT SHALL BE WEATHERPROOF TYPE, NEMA 3R.
16. LIGHTING, POWER, TELEPHONE AND COMMUNICATIONS OUTLETS SHALL NOT BE PLACED BACK-TO-BACK. OUTLET BOXES ON OPPOSITE SIDES OF THE WALL SHALL BE SEPARATED BY A MINIMUM HORIZONTAL DISTANCE OF 18" FOR NON-FIRE RATED WALLS AND 24" FOR FIRE RATED WALLS.
17. NO CONDUIT RUNS WILL BE ALLOWED IN CONCRETE SLAB UNLESS SPECIFICALLY NOTED. CONDUITS SHALL BE RUN ABOVE SUSPENDED CEILINGS WHERE POSSIBLE. EXPOSED CONDUIT (WHERE NO CEILING IS PROVIDED) RUNNING IN PUBLIC AREAS SHALL EXACTLY FOLLOW BUILDING LINES AND SHALL BE GROUPED TOGETHER AS MUCH AS POSSIBLE.
18. PROVIDE PULLBOXES WHEREVER NECESSARY TO FACILITATE PULLING OF CONDUCTORS. COORDINATE LOCATIONS OF BOXES WITH OTHER TRADES TO AVOID CONFLICT. PULLBOXES SHALL BE ACCESSIBLE. THE SIZE OF PULLBOX SHALL COMPLY WITH NEC REQUIREMENT.
19. FOR FIXTURES RECESSED IN HUNG CEILING, OUTLET BOXES SHALL BE ACCESSIBLE THROUGH OPENING THAT IS OPERATED BY REMOVAL OF FIXTURES.
20. WHERE MORE THAN ONE LIGHT SWITCH OCCURS AT SAME LOCATION, SWITCHES SHALL BE MOUNTED IN A MULTIPLE GANG BOX UNDER A SINGLE COVER PLATE. PLATES WITH MORE THAN (3) LIGHT SWITCHES SHALL BE LABELED TO INDICATE THE LIGHT FIXTURES CONTROLLED. SWITCH(ES) CONTROLLING LIGHTS IN EMERGENCY CIRCUIT SHALL BE IN A SEPARATE BOX OR GANGED BOXES UNDER THE SAME COVER PLATE AS THE OTHER SWITCHES.
21. DISCONNECT SWITCHES SHALL BE MOUNTED ON INDIVIDUAL SUPPORTS, OR OTHERWISE DIRECTLY ON EQUIPMENT, PROVIDED NO MODIFICATION TO EQUIPMENT IS NECESSARY.
22. ALL ELECTRIC MATERIAL SHALL BE LISTED BY "UL" FOR THE TYPE OF APPLICATION AND "UL" LABEL SHALL APPEAR ON ALL ELECTRICAL EQUIPMENT.
23. PROVIDE GREEN GROUNDING CONDUCTOR IN EACH RACEWAY INCLUDING CONDUITS, PLUG STRIPS, WIREMOLD. SIZE OF GROUNDING CONDUCTOR SHALL BE IN ACCORDANCE WITH NATIONAL ELECTRIC CODE ARTICLE 250.122.
24. PROVIDE 4" HIGH CONCRETE HOUSE KEEPING PAD UNDER EVERY FLOOR MOUNTED ELECTRICAL EQUIPMENT.
25. REFER TO ARCHITECTURAL DRAWINGS FOR ALL CEILING HEIGHTS.
26. NO EQUIPMENT, J-BOX, ETC. REQUIRING ACCESS SHALL BE LOCATED IN HARD CEILING UNLESS ACCESS PANEL IS PROVIDED. COORDINATE WITH ARCHITECT UNDER THIS EXEMPTION.
27. QUANTITY OF CONDUCTORS ARE SHOWN ON THE HOMERUNS ONLY. CONTRACTOR IS RESPONSIBLE FOR PROVIDING THE REQUIRED NUMBER OF CONDUCTORS TO EQUIPMENT, DEVICES, ETC.
28. THE CONTRACTOR SHALL COORDINATE THEIR WORK WITH OTHER TRADES AT THE SITE. ANY COSTS TO INSTALL WORK TO ACCOMPLISH SAID COORDINATION WHICH DIFFERS FROM THE WORK AS SHOWN ON THE DRAWINGS SHALL BE INCURRED BY THE CONTRACTOR. ANY DISCREPANCIES, AMBIGUITIES OR CONFLICTS SHALL BE BROUGHT TO THE ATTENTION OF THE ENGINEER PRIOR TO PROCUREMENT. ANY SUCH CONFLICTS NOT CLARIFIED PRIOR TO PROCUREMENT SHALL BE SUBJECT TO INTERPRETATION OF THE ENGINEER AT NO ADDITIONAL COST TO THE OWNER.
29. CONTRACTOR SHALL THOROUGHLY REVIEW ALL ENGINEERING DRAWINGS TO FULLY UNDERSTAND THE IMPLICATIONS OF THE WORK OF OTHERS AND TO COORDINATE THE INSTALLATION AND SEQUENCING OF WORKS.
30. REFER TO SINGLE LINE DIAGRAM AND FEEDER SCHEDULES FOR CONDUIT AND CONDUCTOR SIZE TO PANELS, ETC. CONDUIT RUNS MAY NOT BE SHOWN ON DRAWINGS, BUT ARE PART OF THIS CONTRACT.
31. PROVIDE ADDITIONAL GROUND WIRE CONNECTED TO THE ISOLATED GROUND BUS WITHIN THE 120/208V PANELBOARD FEEDING THE CIRCUIT FOR ALL I.G. CIRCUITS. THE ISOLATED GROUND SYSTEM CONDUCTOR SHALL BE ORIGINATED AT EACH STEP-DOWN TRANSFORMER GROUNDING LUG AND EXTENDED THROUGH DEDICATED I.G. BUSES WITHIN DISTRIBUTION BOARDS, PANELBOARDS AND UP TO I.G. TERMINATION POINT AT I.G. TYPE RECEPTACLES. REFER TO FEEDER SCHEDULE FOOTNOTES ON SHEET E500 FOR ADDITIONAL INFORMATION.
32. ALL ELECTRICAL POWER, LIGHTING AND SIGNAL CONTROL WIRING RUN ABOVE GROUND SHALL BE IN METALLIC CONDUIT UNLESS NOTED OTHERWISE.
33. FUSES SHALL BE PROVIDED WITH REJECTION TYPE FUSE HOLDERS.
34. ALL SWITCHBOARDS, PANELBOARDS, BREAKERS AND FUSES SHALL BE FULLY RATED. SERIES RATING IS NOT PERMITTED.
35. ALL TERMINATIONS SHALL BE 75°C.
36. SEE SECURITY DRAWING FOR ALL CONDUITS, CABINETS, J-BOXES, 120V EMERGENCY POWER AND OTHER REQUIREMENTS.
37. ALL CONDUCTORS BOTH LOW AND LINE VOLTAGE FOR POWER AND SIGNAL SHALL BE INSTALLED IN CODE APPROVED RACEWAY.
38. WHERE MULTIPLE HOMERUNS ARE SHOWN FOR THE SAME CIRCUIT, CONDUCTORS MAY BE COMBINED (IN JUNCTION BOX) WHERE CONVENIENT DUE TO ROUTING ARRANGEMENTS, THEN RUN TO PANELBOARD.
39. CONTRACTOR SHALL PROVIDE DETAILED SHOP DRAWINGS OF ALL OVERHEAD AND UNDERGROUND CONDUIT ROUTING PRIOR TO INSTALLATION. SHOP DRAWINGS SHALL BE FULLY COORDINATED WITH ALL TRADES AND SHALL BE ISSUED ONLY AFTER ALL TRADES HAVE SIGNED OFF. PROVIDE DESIGNATED ROUTING ZONES FOR BRANCH CIRCUIT CONDUITS.
40. CONTRACTOR SHALL SUBMIT CALCULATIONS FOR EQUIPMENT SUPPORTS, ANCHORAGE AND VIBRATION ISOLATORS FOR APPROVAL. ALL CALCULATIONS SHALL BE PREPARED, STAMPED AND SIGNED BY A PROFESSIONAL STRUCTURAL ENGINEER REGISTERED IN THE STATE.
41. ELECTRICAL CONTRACTOR SHALL COORDINATE WITH STRUCTURAL CONTRACTOR FOR ALL CONCRETE WALL OR FLOOR PENETRATIONS. HOLES FOR CONDUIT IN CONCRETE WALLS OR FLOORS SHALL BE PLACED IN SLEEVES. IF SLEEVES ARE NOT PLACED, CUTTING HOLES IN STRUCTURAL ELEMENTS SHALL BE DRILLED WITH CORE DRILLING EQUIPMENT ONLY AFTER THE REINFORCEMENT INSIDE THE WALL HAS BEEN LOCATED. PROVIDE DETAILED INFORMATION TO THE STRUCTURAL ENGINEER PRIOR TO EXECUTION INCLUDING PROPOSED LOCATION AND DIMENSIONED LOCATION OF REINFORCEMENT OF THE WALLS OR FLOORS. CORE DRILLING MAY NOT BE PERMISSIBLE IN CERTAIN CIRCUMSTANCES OR COULD REQUIRE STRENGTHENING OF STRUCTURAL ELEMENTS.
42. ALL ELECTRICAL EQUIPMENT SHALL BE LOCATED IN DEDICATED SPACES AND PROTECTED FROM DAMAGE AS REQUIRED BY CEC 110.26(F). NO PIPING, DUCTS OR EQUIPMENT FOREIGN TO ELECTRICAL EQUIPMENT SHALL BE PERMITTED TO BE LOCATED WITHIN THE DEDICATED SPACE ABOVE THE ELECTRICAL EQUIPMENT.
43. TYPE OF CONDUITS USED SHALL BE AS STATED IN THE SPECIFICATIONS AND AS FOLLOWS:
    A. RIGID STEEL CONDUIT SHALL BE USED WHERE EXPOSED TO WEATHER OR PHYSICAL DAMAGE, REQUIRED BY CODE, IN CORROSIVE AREAS.
    B. EMT CONDUIT SHALL BE CONCEALED IN DRY LOCATIONS AS IN STUD PARTITIONS AND FURRED CEILING SPACES. EXPOSED INSTALLATION IS ACCEPTABLE IN ELECTRICAL ROOMS ONLY, AREAS NOT EXPOSED TO WEATHER/CORROSION AND PHYSICAL DAMAGE, AND FOR 7'-6" MOUNTING ABOVE FINISHED FLOOR.
    C. FLEXIBLE STEEL CONDUIT SHALL BE USED IN DRY LOCATIONS, WHERE REQUIRED BY CODE, FOR CONNECTION TO RECESSED LIGHT FIXTURES, MOTORS, TRANSFORMERS, AND VIBRATING EQUIPMENT.
    D. LIQUID TIGHT FLEXIBLE CONDUIT SHALL BE INSTALLED IN LIEU OF THE FLEXIBLE STEEL WHERE REQUIRED BY CODE, EXPOSED TO WEATHER, AND IN DAMP OR WET LOCATIONS.
44. RIGID NONMETALLIC CONDUITS, PVC SCHEDULE 40 SHALL BE USED WHERE IT IS ROUTED UNDERGROUND OR IN CONCRETE SLAB.
45. PVC COATED STEEL CONDUITS SHALL BE USED IN LIEU OF RIGID NONMETALLIC CONDUIT FOR ALL CONDUIT PENETRATIONS THROUGH THE EXTERIOR WALL AND BENDS IN CONDUITS 2" AND LARGER.
46. METAL-CLAD (MC) CABLES SHALL BE USED IN LIEU OF CONDUIT AND WIRE FOR FINAL CONNECTION TO LIGHT FIXTURES AND RECEPTACLES IN AREAS/ROOMS WITH DROP CEILING (ACOUSTICAL CEILING TILE). ALL WIRING FOR BRANCH CIRCUITS DISTRIBUTED THROUGHOUT THE BUILDING SHALL BE RUN IN CONDUIT EXCEPT FOR FINAL TERMINATIONS TO FIXTURES AND RECEPTACLES OUTLETS WHERE AN MC CABLE MAY BE USED TO EXTEND CONNECTION FROM J-BOX TO OUTLETS AS DESCRIBED ABOVE.
47. OUTDOOR LIGHTING SYSTEMS SHALL BE DESIGNED AND INSTALLED TO COMPLY WITH ALL OF THE FOLLOWING:
    A. THE MINIMUM REQUIREMENTS IN CALIFORNIA ENERGY CODE FOR LIGHTING ZONES 1-4,
    B. BACKLIGHT, UPLIGHT AND GLARE (BUG) RATINGS AS DEFINED IN IESNA TM-15-11,
    C. ALLOWABLE BUG RATINGS NOT EXCEEDING THOSE SHOWN IN ON CALGREEN TABLE 5.106.8.
48. REFER TO OTHER CONSULTANT DRAWINGS FOR SCOPE OF WORK.

ELECTRICAL DRAWING LIST

DWG NO.	DRAWING TITLE
E000	ELECTRICAL NOTES, SYMBOLS, & ABBREVIATIONS
E100	ELECTRICAL SITE PLAN
E201	ELECTRICAL GROUND FLOOR PLAN - OVERALL
E201A	ELECTRICAL LEARNING CENTER GROUND FLOOR PLAN - SOUTH
E201B	ELECTRICAL LEARNING CENTER GROUND FLOOR PLAN - NORTH
E201C	ELECTRICAL BOXCAR GROUND FLOOR PLAN
E202	ELECTRICAL MEZZANINE FLOOR PLAN - OVERALL
E202A	ELECTRICAL LEARNING CENTER MEZZ FLOOR PLAN - SOUTH
E221	ELECTRICAL ROOF LEVEL PLAN - OVERALL
E221A	ELECTRICAL LEARNING CENTER ROOF LEVEL PLAN - SOUTH
E221B	ELECTRICAL LEARNING CENTER ROOF LEVEL PLAN - NORTH
E221C	ELECTRICAL BOXCAR ROOF LEVEL PLAN
E401	ELECTRICAL ENLARGED PLANS
E501	ELECTRICAL SINGLE LINE DIAGRAM
EL301	ELECTRICAL LIGHTING GROUND FLOOR CEILING PLAN - OVERALL
EL301A	ELECTRICAL LIGHTING LEARNING CENTER GROUND FLOOR CEILING PLAN - SOUTH
EL301B	ELECTRICAL LIGHTING LEARNING CENTER GROUND FLOOR CEILING PLAN - NORTH
EL301C	ELECTRICAL LIGHTING BOXCAR GROUND FLOOR CEILING PLAN
EL302	ELECTRICAL LIGHTING MEZZANINE CEILING PLAN - OVERALL
EL302A	ELECTRICAL LIGHTING LEARNING CENTER MEZZANINE CEILING PLAN - SOUTH

NOT FOR CONSTRUCTION

09.AUG.2021

belzberg architects
2321 MAIN STREET
SANTA MONICA, CA 90405
310.453.9611
www.belzbergarchitects.com

ARUP
Arup North America Ltd.
900 Wilshire Boulevard,
19th Floor
Los Angeles CA 90017
Tel: 310 578 4400
www.arup.com

#	DESCRIPTION	DATE

HOLOCAUST MUSEUM LA EXPANSION

100 THE GROVE DRIVE
LOS ANGELES, CA 90036

ELECTRICAL NOTES, SYMBOLS, & ABBREVIATIONS

PROJECT NUMBER: 17009

E000

08/09/21 19:11:12

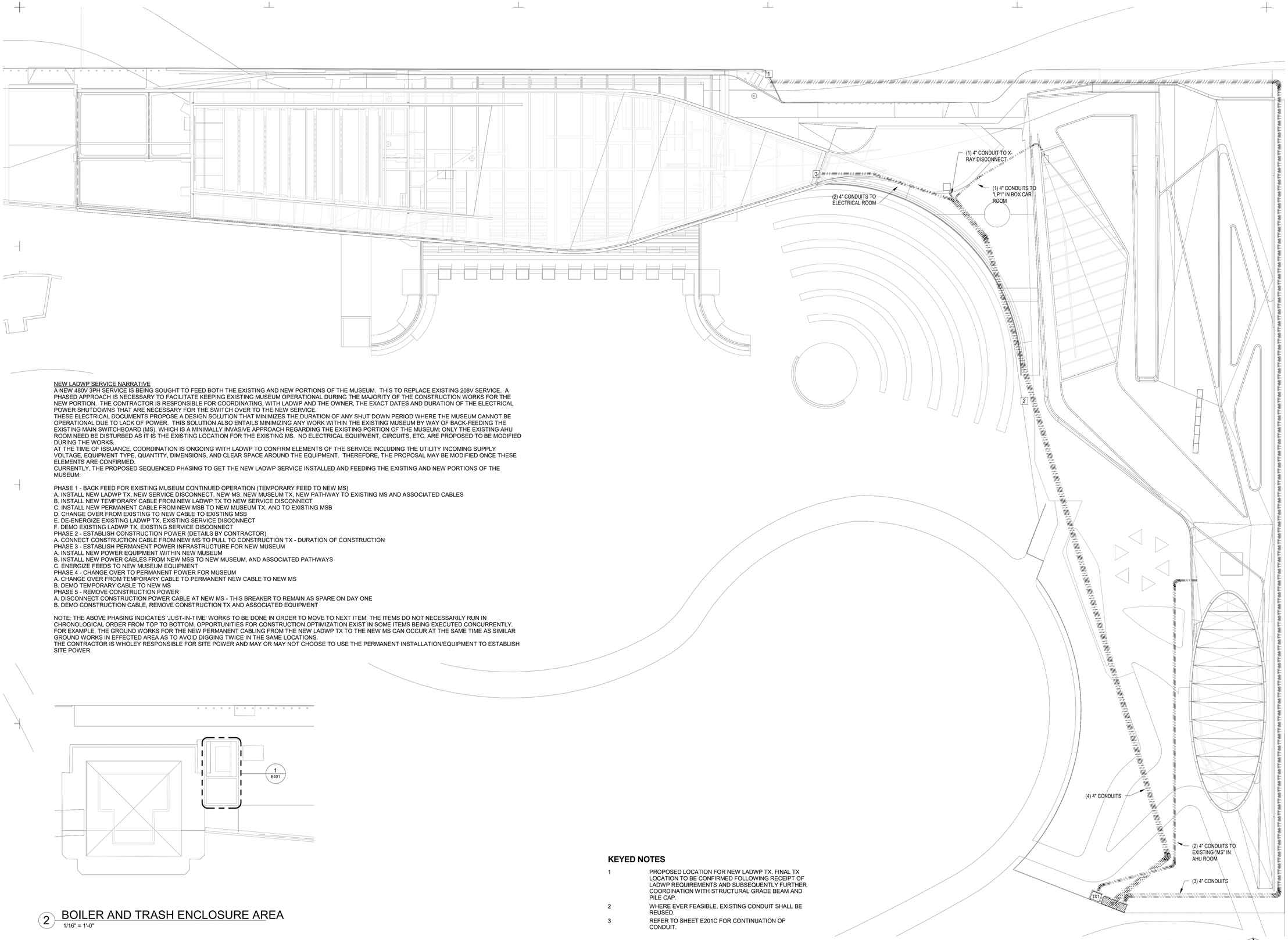

NEW LADWP SERVICE NARRATIVE

A NEW 480V 3PH SERVICE IS BEING SOUGHT TO FEED BOTH THE EXISTING AND NEW PORTIONS OF THE MUSEUM. THIS TO REPLACE EXISTING 208V SERVICE. A PHASED APPROACH IS NECESSARY TO FACILITATE KEEPING EXISTING MUSEUM OPERATIONAL DURING THE MAJORITY OF THE CONSTRUCTION WORKS FOR THE NEW PORTION. THE CONTRACTOR IS RESPONSIBLE FOR COORDINATING, WITH LADWP AND THE OWNER, THE EXACT DATES AND DURATION OF THE ELECTRICAL POWER SHUTDOWNS THAT ARE NECESSARY FOR THE SWITCH OVER TO THE NEW SERVICE.
THESE ELECTRICAL DOCUMENTS PROPOSE A DESIGN SOLUTION THAT MINIMIZES THE DURATION OF ANY SHUT DOWN PERIOD WHERE THE MUSEUM CANNOT BE OPERATIONAL DUE TO LACK OF POWER. THIS SOLUTION ALSO ENTAILS MINIMIZING ANY WORK WITHIN THE EXISTING MUSEUM BY WAY OF BACK-FEEDING THE EXISTING MAIN SWITCHBOARD (MS), WHICH IS A MINIMALLY INVASIVE APPROACH REGARDING THE EXISTING PORTION OF THE MUSEUM; ONLY THE EXISTING AHU ROOM NEED BE DISTURBED AS IT IS THE EXISTING LOCATION FOR THE EXISTING MS. NO ELECTRICAL EQUIPMENT, CIRCUITS, ETC. ARE PROPOSED TO BE MODIFIED DURING THE WORKS.
AT THE TIME OF ISSUANCE, COORDINATION IS ONGOING WITH LADWP TO CONFIRM ELEMENTS OF THE SERVICE INCLUDING THE UTILITY INCOMING SUPPLY VOLTAGE, EQUIPMENT TYPE, QUANTITY, DIMENSIONS, AND CLEAR SPACE AROUND THE EQUIPMENT. THEREFORE, THE PROPOSAL MAY BE MODIFIED ONCE THESE ELEMENTS ARE CONFIRMED.
CURRENTLY, THE PROPOSED SEQUENCED PHASING TO GET THE NEW LADWP SERVICE INSTALLED AND FEEDING THE EXISTING AND NEW PORTIONS OF THE MUSEUM:

PHASE 1 - BACK FEED FOR EXISTING MUSEUM CONTINUED OPERATION (TEMPORARY FEED TO NEW MS)
A. INSTALL NEW LADWP TX, NEW SERVICE DISCONNECT, NEW MS, NEW MUSEUM TX, NEW PATHWAY TO EXISTING MS AND ASSOCIATED CABLES
B. INSTALL NEW TEMPORARY CABLE FROM NEW LADWP TX TO NEW SERVICE DISCONNECT
C. INSTALL NEW PERMANENT CABLE FROM NEW MSB TO NEW MUSEUM TX, AND TO EXISTING MSB
D. CHANGE OVER FROM EXISTING TO NEW CABLE TO EXISTING MSB
E. DE-ENERGIZE EXISTING LADWP TX, EXISTING SERVICE DISCONNECT
F. DEMO EXISTING LADWP TX, EXISTING SERVICE DISCONNECT
PHASE 2 - ESTABLISH CONSTRUCTION POWER (DETAILS BY CONTRACTOR)
A. CONNECT CONSTRUCTION CABLE FROM NEW MS TO PULL TO CONSTRUCTION TX - DURATION OF CONSTRUCTION
PHASE 3 - ESTABLISH PERMANENT POWER INFRASTRUCTURE FOR NEW MUSEUM
A. INSTALL NEW POWER EQUIPMENT WITHIN NEW MUSEUM
B. INSTALL NEW POWER CABLES FROM NEW MSB TO NEW MUSEUM, AND ASSOCIATED PATHWAYS
C. ENERGIZE FEEDS TO NEW MUSEUM EQUIPMENT
PHASE 4 - CHANGE OVER TO PERMANENT POWER FOR MUSEUM
A. CHANGE OVER FROM TEMPORARY CABLE TO PERMANENT NEW CABLE TO NEW MS
B. DEMO TEMPORARY CABLE TO NEW MS
PHASE 5 - REMOVE CONSTRUCTION POWER
A. DISCONNECT CONSTRUCTION POWER CABLE AT NEW MS - THIS BREAKER TO REMAIN AS SPARE ON DAY ONE
B. DEMO CONSTRUCTION CABLE, REMOVE CONSTRUCTION TX AND ASSOCIATED EQUIPMENT

NOTE: THE ABOVE PHASING INDICATES 'JUST-IN-TIME' WORKS TO BE DONE IN ORDER TO MOVE TO NEXT ITEM. THE ITEMS DO NOT NECESSARILY RUN IN CHRONOLOGICAL ORDER FROM TOP TO BOTTOM. OPPORTUNITIES FOR CONSTRUCTION OPTIMIZATION EXIST IN SOME ITEMS BEING EXECUTED CONCURRENTLY. FOR EXAMPLE, THE GROUND WORKS FOR THE NEW PERMANENT CABLING FROM THE NEW LADWP TX TO THE NEW MS CAN OCCUR AT THE SAME TIME AS SIMILAR GROUND WORKS IN EFFECTED AREA AS TO AVOID DIGGING TWICE IN THE SAME LOCATIONS.
THE CONTRACTOR IS WHOLEY RESPONSIBLE FOR SITE POWER AND MAY OR MAY NOT CHOOSE TO USE THE PERMANENT INSTALLATION/EQUIPMENT TO ESTABLISH SITE POWER.

2 BOILER AND TRASH ENCLOSURE AREA
1/16" = 1'-0"

KEYED NOTES

1 PROPOSED LOCATION FOR NEW LADWP TX. FINAL TX LOCATION TO BE CONFIRMED FOLLOWING RECEIPT OF LADWP REQUIREMENTS AND SUBSEQUENTLY FURTHER COORDINATION WITH STRUCTURAL GRADE BEAM AND PILE CAP.

2 WHERE EVER FEASIBLE, EXISTING CONDUIT SHALL BE REUSED.

3 REFER TO SHEET E201C FOR CONTINUATION OF CONDUIT.

NOT FOR CONSTRUCTION

09.AUG.2021

belzberg architects
2321 MAIN STREET
SANTA MONICA, CA 90405
310.453.9611
www.belzbergarchitects.com

ARUP
Arup North America Ltd.
900 Wilshire Boulevard,
19th Floor
Los Angeles CA 90017
Tel: 310 578 4400
www.arup.com

#	DESCRIPTION	DATE

HOLOCAUST MUSEUM LA EXPANSION

100 THE GROVE DRIVE
LOS ANGELES, CA 90036

ELECTRICAL SITE PLAN

PROJECT NUMBER: 17009

E100

08/09/21 19:11:21

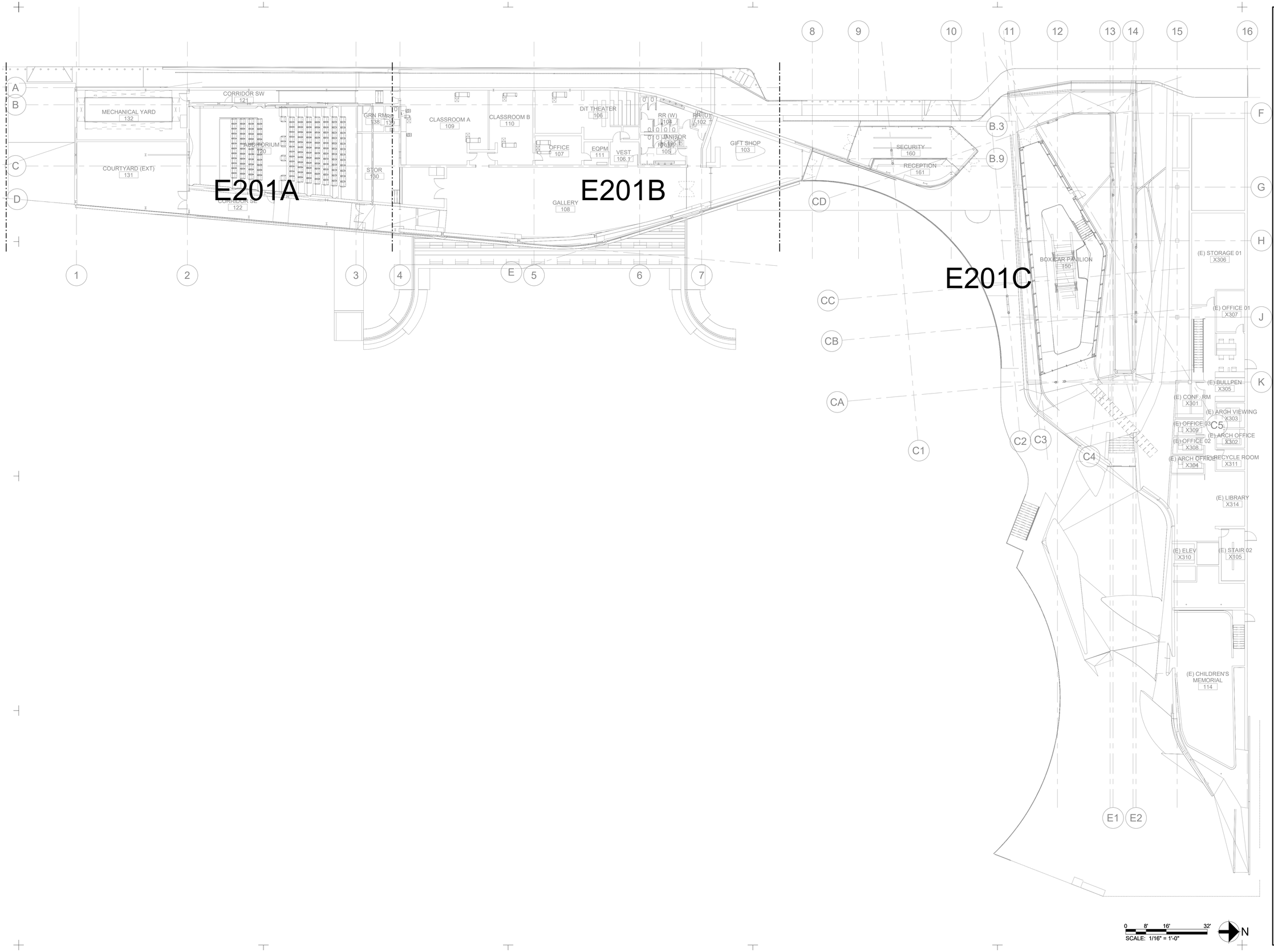

0 8' 16' 32'
SCALE: 1/16" = 1'-0"

N

NOT FOR CONSTRUCTION

09.AUG.2021

belzberg architects
2321 MAIN STREET
SANTA MONICA, CA 90405
310.453.9611
www.belzbergarchitects.com

ARUP
Arup North America Ltd.
900 Wilshire Boulevard,
19th Floor
Los Angeles CA 90017
Tel: 310 578 4400
www.arup.com

#	DESCRIPTION	DATE

HOLOCAUST MUSEUM LA EXPANSION

100 THE GROVE DRIVE
LOS ANGELES, CA 90036

ELECTRICAL GROUND FLOOR PLAN - OVERALL

PROJECT NUMBER: 17009

E201

08/09/21 9:11:28

KEYED NOTES

1 FOR CONNECTION TO HAND DRYER.
2 FOR CONNECTION TO POWER DOOR.
3 COMBINATION POWER AND DATA FLOOR BOX.
4 JUNCTION BOX FOR CONNECTION TO BMS CONTROLS.

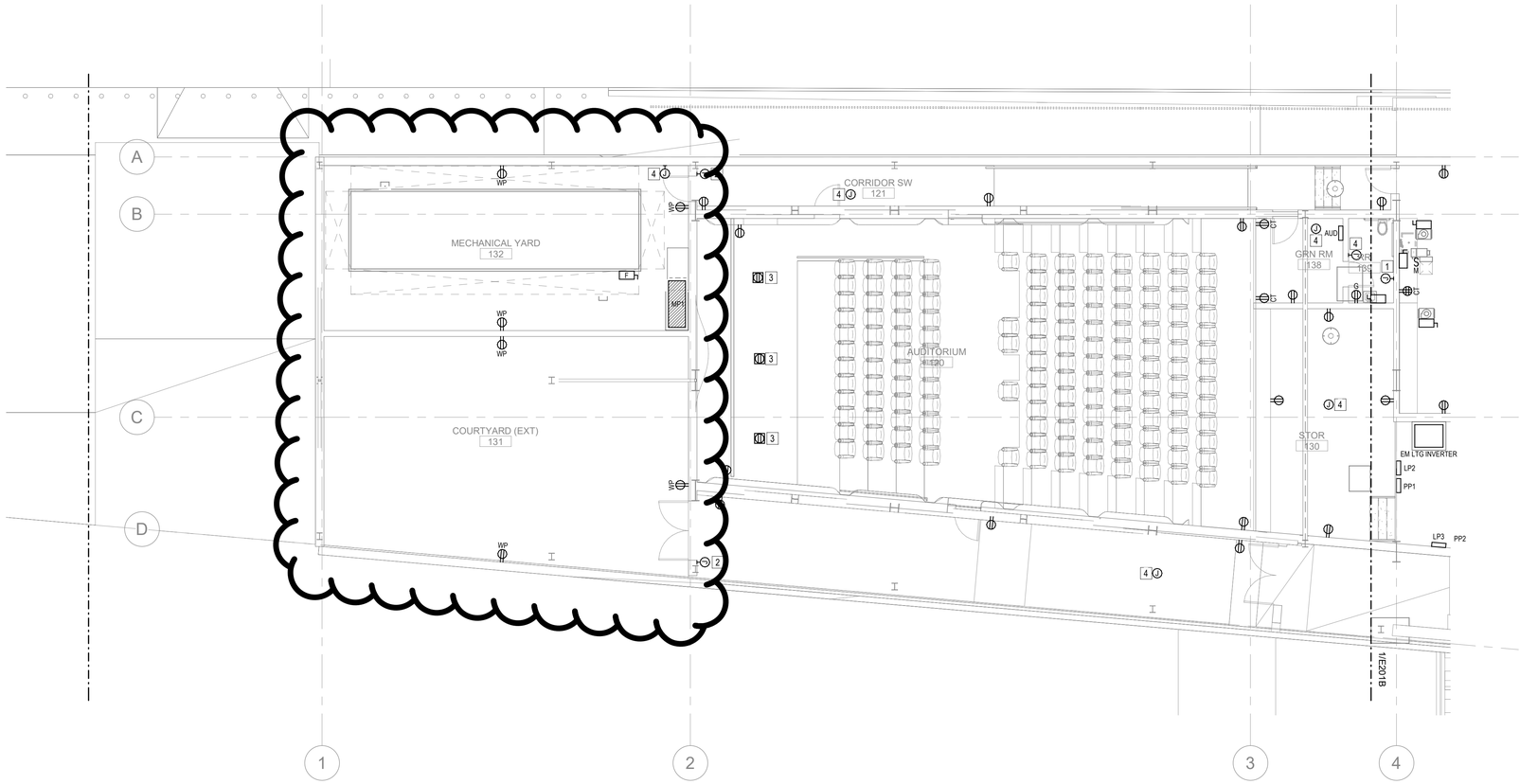

SCALE: 1/8" = 1'-0"

0 4' 8' 16'

N

NOT FOR CONSTRUCTION

09.AUG.2021

ba
belzberg architects
2321 MAIN STREET
SANTA MONICA, CA 90405
310.453.9611
www.belzbergarchitects.com

ARUP
Arup North America Ltd.
900 Wilshire Boulevard,
19th Floor
Los Angeles CA 90017
Tel: 310 578 4400
www.arup.com

#	DESCRIPTION	DATE

HOLOCAUST MUSEUM LA EXPANSION

100 THE GROVE DRIVE
LOS ANGELES, CA 90036

ELECTRICAL LEARNING CENTER GROUND FLOOR PLAN - SOUTH

PROJECT NUMBER: 17009

E201A

08/09/21 19:11:32

KEYED NOTES

1 FOR CONNECTION TO HAND DRYER.
2 FOR CONNECTION TO POWER DOOR.
3 CEILING MOUNTED RECEPTACLE FOR PROJECTOR.
4 FLOOR BOX FOR CONNECTION TO HOLOGRAM PROJECTOR.
5 JUNCTION BOX FOR CONNECTION TO BMS CONTROLS.
6 REFER TO SHEET E100 FOR CONTINUATION OF CONDUIT.

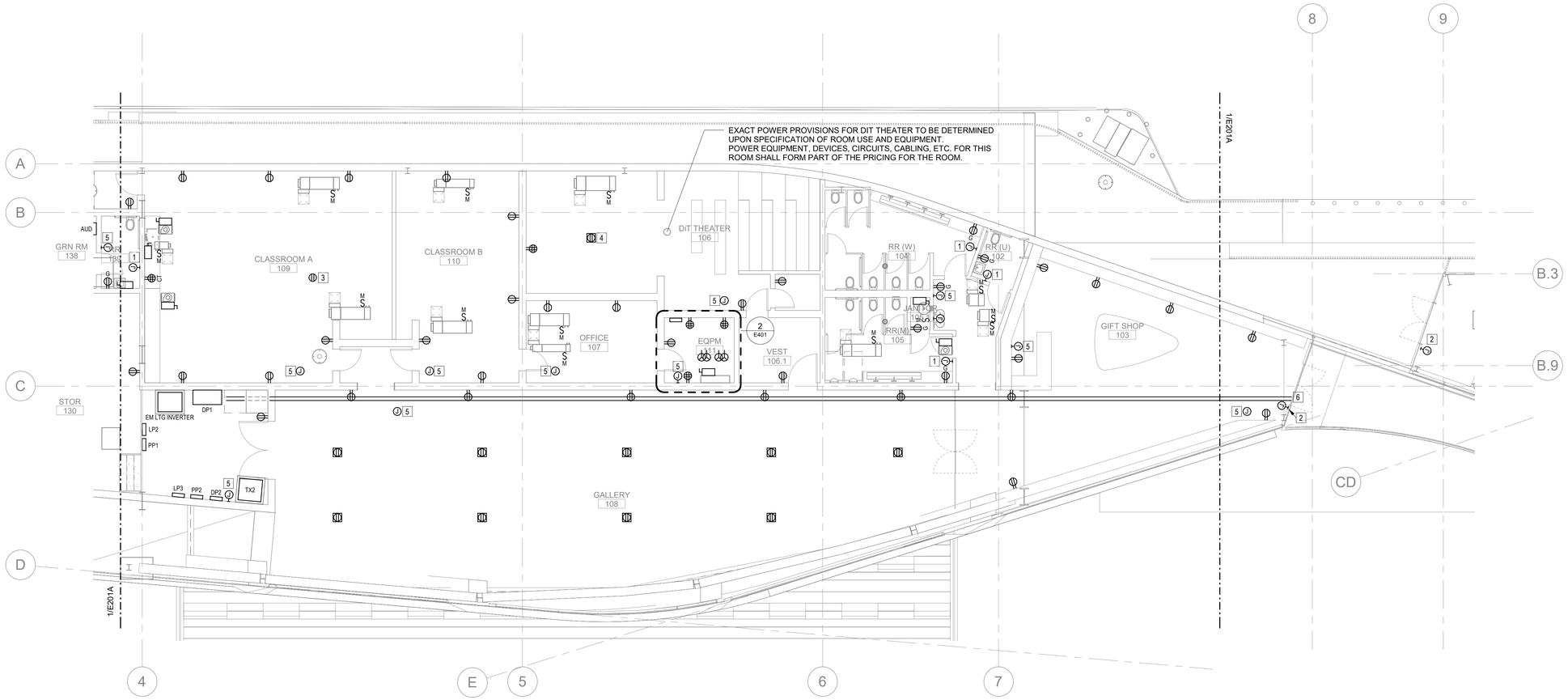

0 4' 8' 16'
SCALE: 1/8" = 1'-0"

N

NOT FOR CONSTRUCTION

09.AUG.2021

belzberg architects
2321 MAIN STREET
SANTA MONICA, CA 90405
310.453.9611
www.belzbergarchitects.com

ARUP
Arup North America Ltd.
900 Wilshire Boulevard,
19th Floor
Los Angeles CA 90017
Tel: 310 578 4400
www.arup.com

#	DESCRIPTION	DATE

HOLOCAUST MUSEUM LA EXPANSION

100 THE GROVE DRIVE
LOS ANGELES, CA 90036

ELECTRICAL LEARNING CENTER GROUND FLOOR PLAN - NORTH

PROJECT NUMBER: 17009

E201B

08/09/21 19:11:36

KEYED NOTES

1 FOR CONNECTION TO HAND DRYER.
2 FOR CONNECTION TO POWER DOOR.
3 JUNCTION BOX FOR CONNECTION TO BMS CONTROLS.
4 REFER TO SHEET E100 FOR CONTINUATION OF CONDUIT.
5 DISCONNECT FOR BAGGAGE SCANNER.

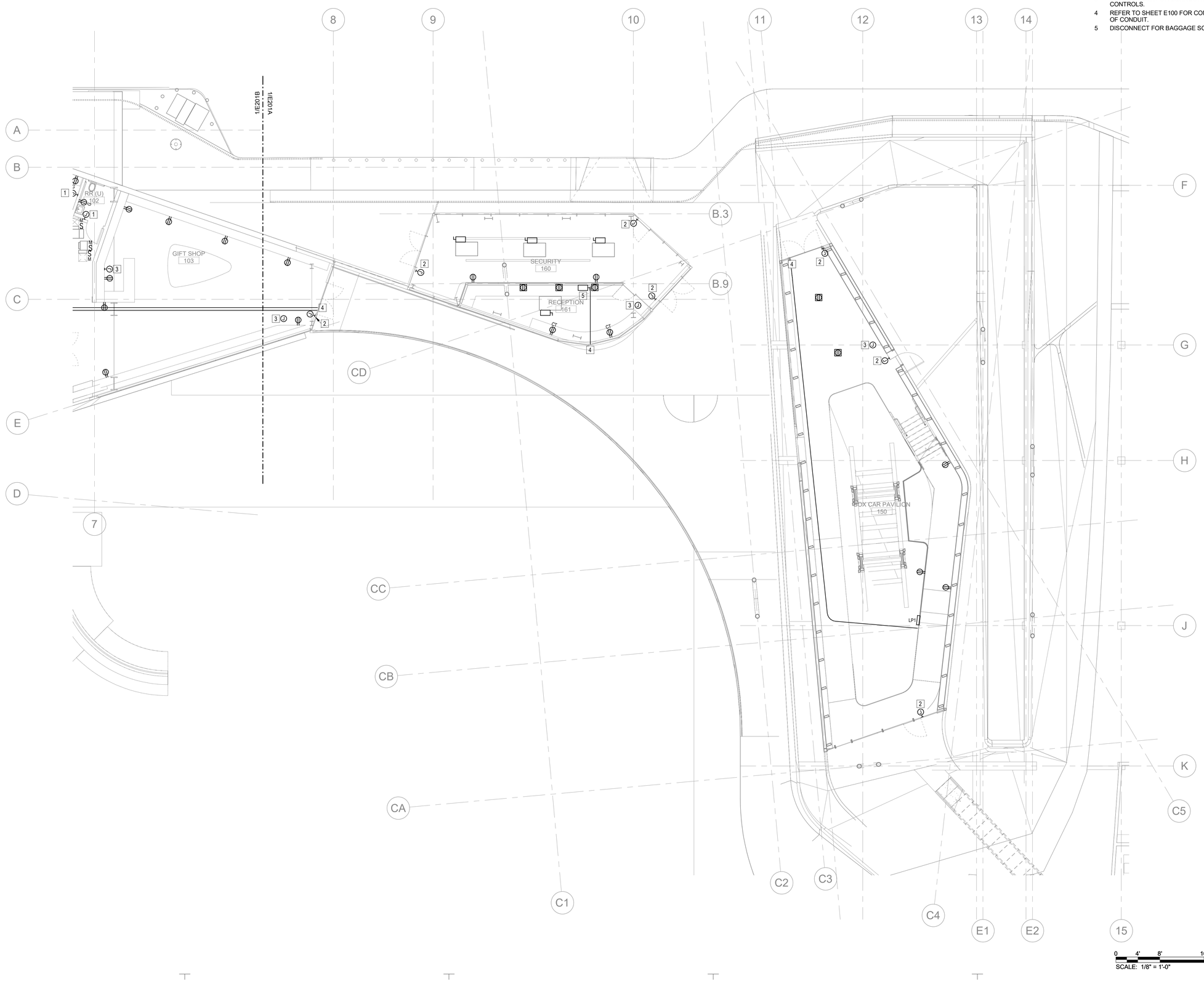

SCALE: 1/8" = 1'-0"

NOT FOR CONSTRUCTION

09.AUG.2021

belzberg architects
2321 MAIN STREET
SANTA MONICA, CA 90405
310.453.9611
www.belzbergarchitects.com

ARUP
Arup North America Ltd.
900 Wilshire Boulevard,
19th Floor
Los Angeles CA 90017
Tel: 310 578 4400
www.arup.com

#	DESCRIPTION	DATE

HOLOCAUST MUSEUM LA EXPANSION

100 THE GROVE DRIVE
LOS ANGELES, CA 90036

ELECTRICAL BOXCAR GROUND FLOOR PLAN

PROJECT NUMBER: 17009

E201C

08/09/21 19:11:40

0 8' 16' 32'
SCALE: 1/16" = 1'-0"

N

NOT FOR CONSTRUCTION

09.AUG.2021

ba
belzberg architects
2321 MAIN STREET
SANTA MONICA, CA 90405
310.453.9611
www.belzbergarchitects.com

ARUP
Arup North America Ltd.
900 Wilshire Boulevard,
19th Floor
Los Angeles CA 90017
Tel: 310 578 4400
www.arup.com

#	DESCRIPTION	DATE

HOLOCAUST MUSEUM LA EXPANSION

100 THE GROVE DRIVE
LOS ANGELES, CA 90036

ELECTRICAL MEZZANINE FLOOR PLAN - OVERALL

PROJECT NUMBER: 17009

E202

08/09/21 19:11:46

KEYED NOTES

1 PROVIDE 20A 208V SINGLE PHASE CIRCUIT FOR CEILING MOUNTED PROJECTOR.

2 JUNCTION BOX FOR CONNECTION TO BMS CONTROLS.

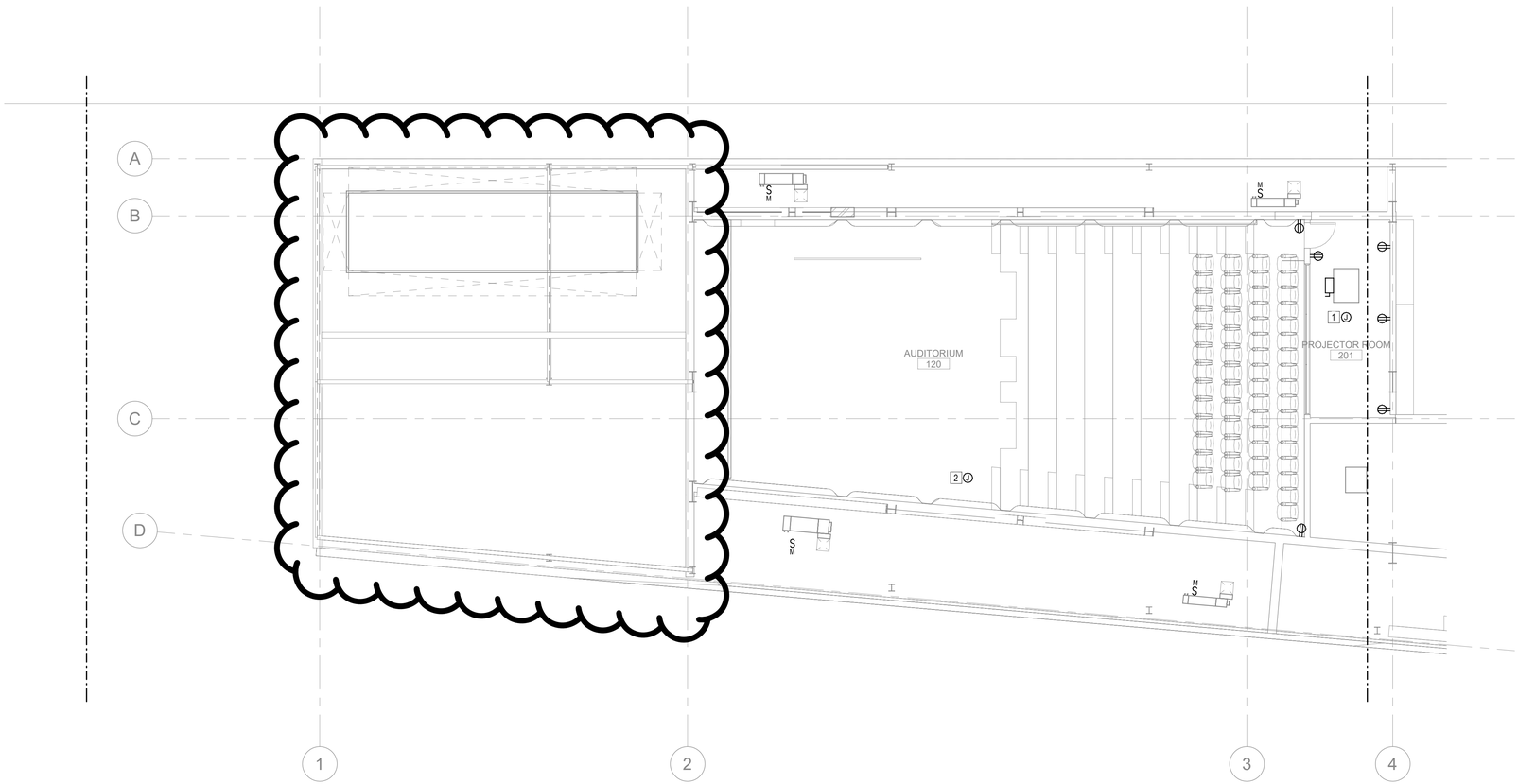

SCALE: 1/8" = 1'-0"

N

NOT FOR CONSTRUCTION

09.AUG.2021

ba
belzberg architects
2321 MAIN STREET
SANTA MONICA, CA 90405
310.453.9611
www.belzbergarchitects.com

ARUP
Arup North America Ltd.
900 Wilshire Boulevard,
19th Floor
Los Angeles CA 90017
Tel: 310 578 4400
www.arup.com

#	DESCRIPTION	DATE

HOLOCAUST MUSEUM LA EXPANSION

100 THE GROVE DRIVE
LOS ANGELES, CA 90036

ELECTRICAL LEARNING CENTER MEZZ FLOOR PLAN - SOUTH

PROJECT NUMBER: 17009

E202A

08/09/21 19:11:49

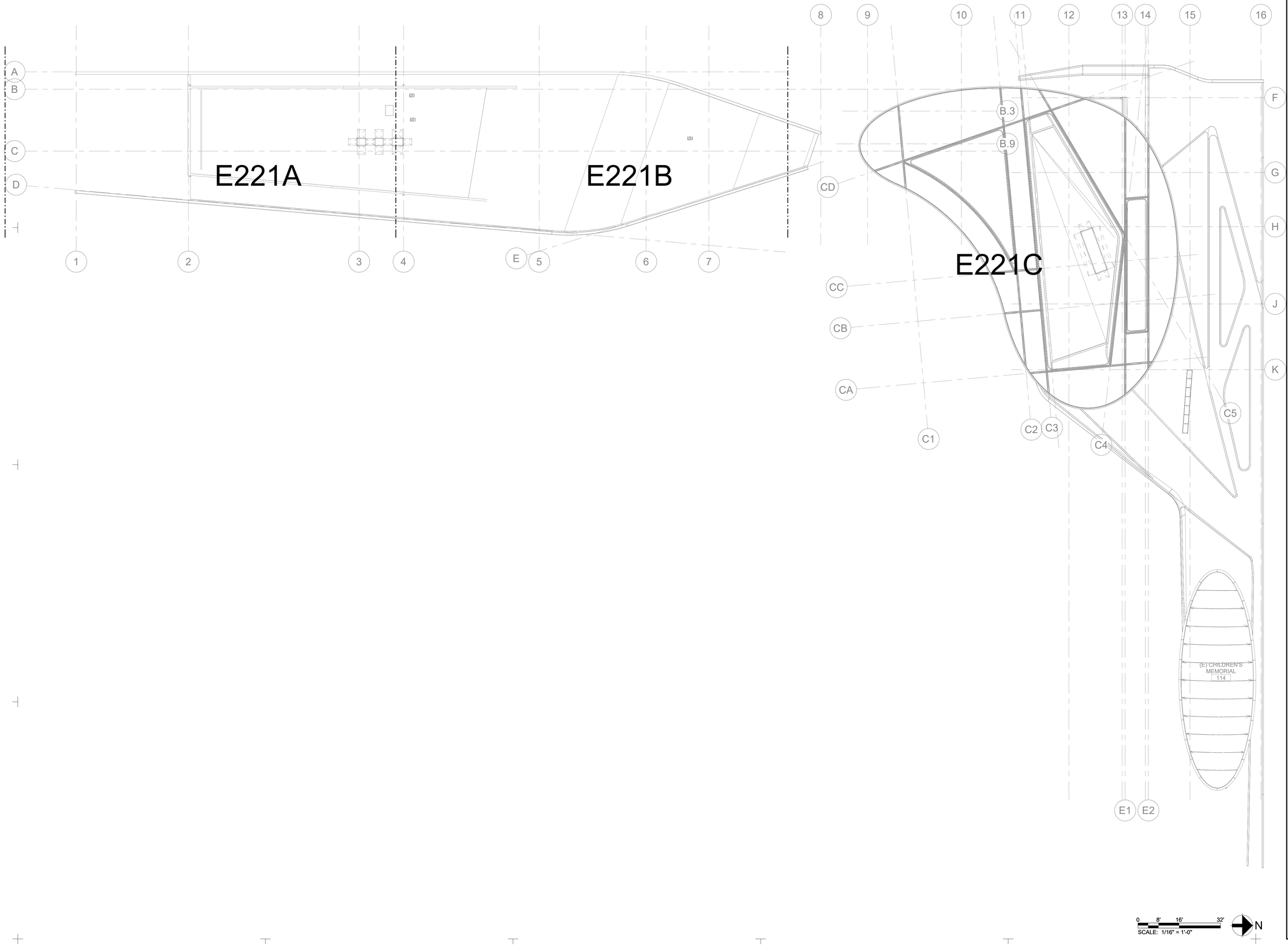

NOT FOR CONSTRUCTION

09.AUG.2021

ba
belzberg architects
2321 MAIN STREET
SANTA MONICA, CA 90405
310.453.9611
www.belzbergarchitects.com

ARUP
Arup North America Ltd.
900 Wilshire Boulevard,
19th Floor
Los Angeles CA 90017
Tel: 310 578 4400
www.arup.com

#	DESCRIPTION	DATE

HOLOCAUST MUSEUM LA EXPANSION

100 THE GROVE DRIVE
LOS ANGELES, CA 90036

ELECTRICAL ROOF LEVEL PLAN - OVERALL

PROJECT NUMBER: 17009

E221

08/09/21 19:11:51

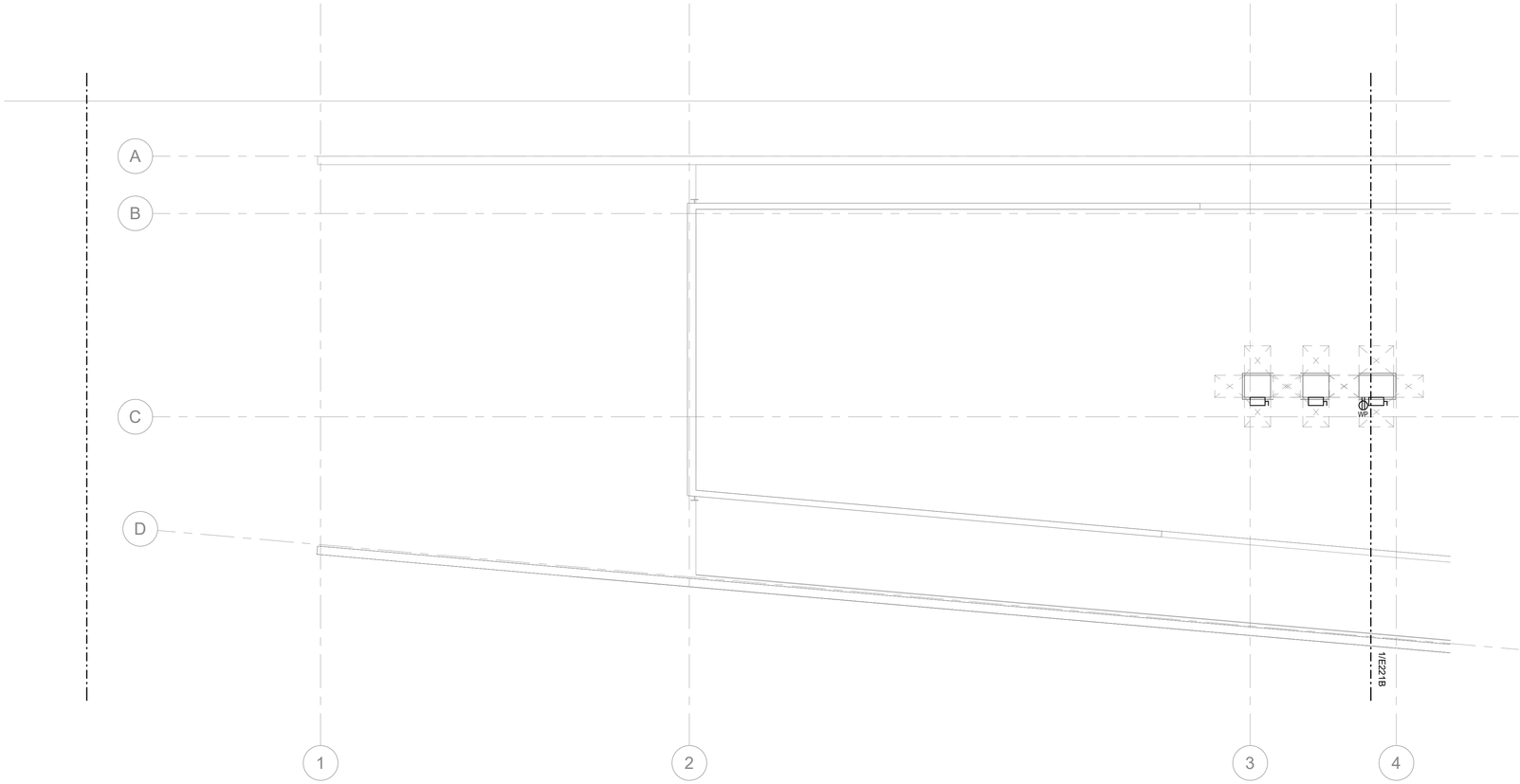

0 4' 8' 16'
SCALE: 1/8" = 1'-0"

N

NOT FOR CONSTRUCTION

09.AUG.2021

ba
belzberg architects
2321 MAIN STREET
SANTA MONICA, CA 90405
310.453.9611
www.belzbergarchitects.com

ARUP
Arup North America Ltd.
900 Wilshire Boulevard,
19th Floor
Los Angeles CA 90017
Tel: 310 578 4400
www.arup.com

#	DESCRIPTION	DATE

HOLOCAUST MUSEUM LA EXPANSION

100 THE GROVE DRIVE
LOS ANGELES, CA 90036

ELECTRICAL LEARNING CENTER ROOF LEVEL PLAN - SOUTH

PROJECT NUMBER: 17009

E221A

08/09/21 9:11:51

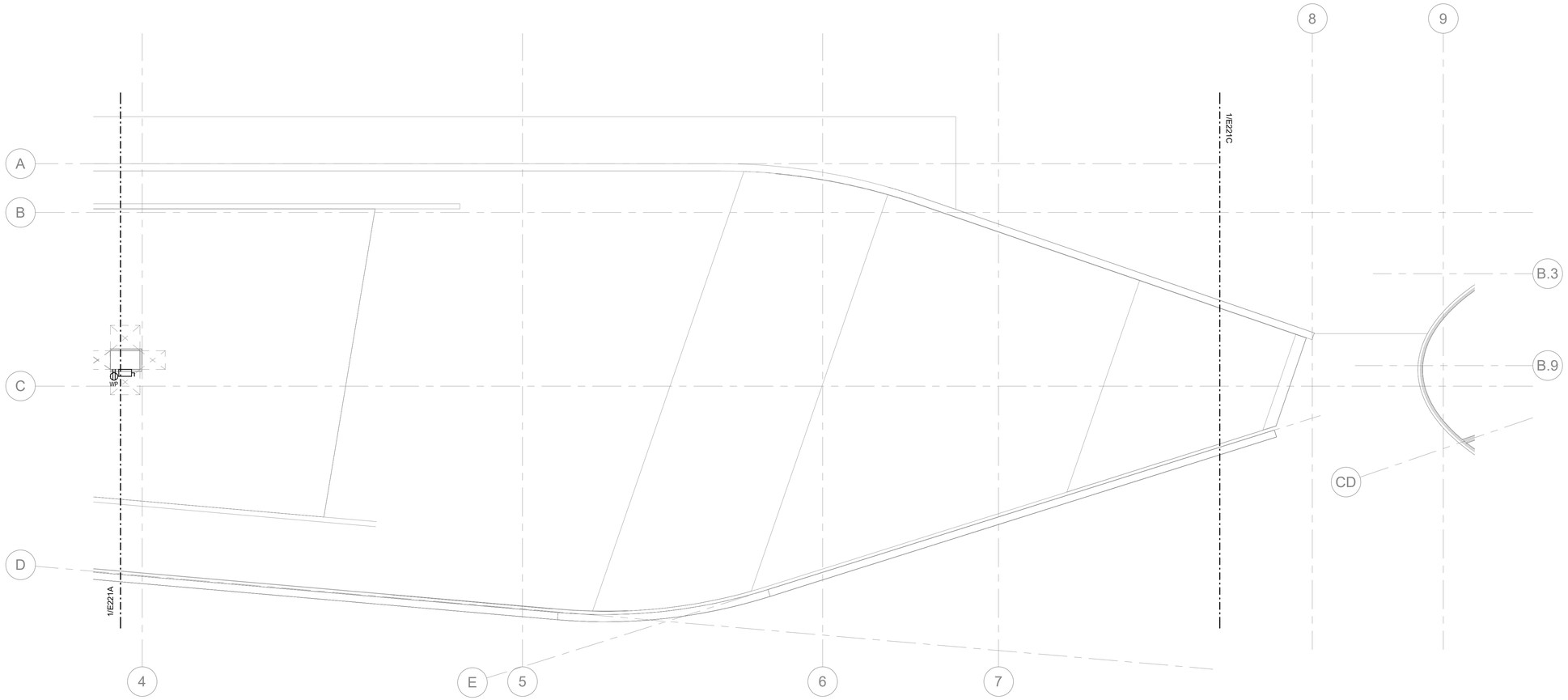

0 4' 8' 16'
SCALE: 1/8" = 1'-0"

N

NOT FOR CONSTRUCTION

09.AUG.2021

ba
belzberg architects
2321 MAIN STREET
SANTA MONICA, CA 90405
310.453.9611
www.belzbergarchitects.com

ARUP
Arup North America Ltd.
900 Wilshire Boulevard,
19th Floor
Los Angeles CA 90017
Tel: 310 578 4400
www.arup.com

#	DESCRIPTION	DATE

HOLOCAUST MUSEUM LA EXPANSION

100 THE GROVE DRIVE
LOS ANGELES, CA 90036

ELECTRICAL LEARNING CENTER ROOF LEVEL PLAN - NORTH

PROJECT NUMBER: 17009

E221B

08/09/21 19:11:52

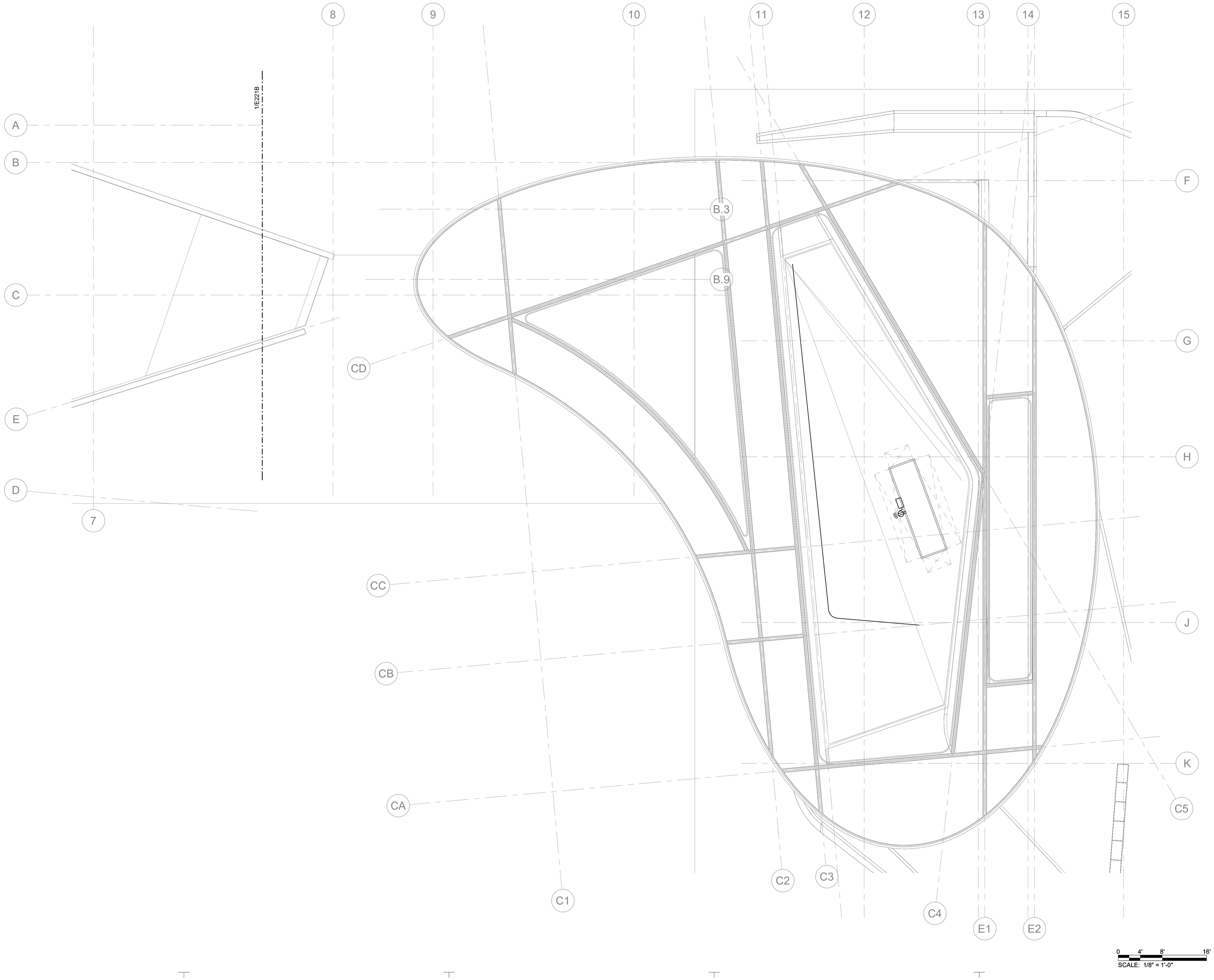

NOT FOR CONSTRUCTION

09.AUG.2021

ba
belzberg architects
2321 MAIN STREET
SANTA MONICA, CA 90405
310.453.9611
www.belzbergarchitects.com

ARUP
Arup North America Ltd.
900 Wilshire Boulevard,
19th Floor
Los Angeles CA 90017
Tel: 310 578 4400
www.arup.com

#	DESCRIPTION	DATE

HOLOCAUST MUSEUM LA EXPANSION

100 THE GROVE DRIVE
LOS ANGELES, CA 90036

ELECTRICAL BOXCAR ROOF LEVEL PLAN

PROJECT NUMBER: 17009

E221C

08/09/21 19:11:53

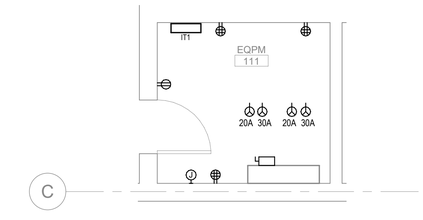

2 LEVEL 1 - EQUIPMENT ROOM 111
1/4" = 1'-0"

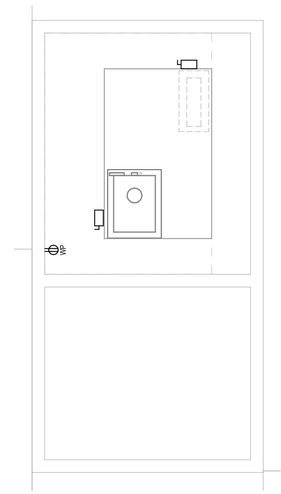

1 BOILER AND TRASH ENCLOSURE AREA
1/4" = 1'-0"

0 2' 4' 8'
SCALE: 1/4" = 1'-0"

N

NOT FOR CONSTRUCTION

09.AUG.2021

ba
belzberg architects
2321 MAIN STREET
SANTA MONICA, CA 90405
310.453.9611
www.belzbergarchitects.com

ARUP
Arup North America Ltd.
900 Wilshire Boulevard,
19th Floor
Los Angeles CA 90017
Tel: 310 578 4400
www.arup.com

#	DESCRIPTION	DATE

HOLOCAUST MUSEUM LA EXPANSION

100 THE GROVE DRIVE
LOS ANGELES, CA 90036

ELECTRICAL ENLARGED PLANS

PROJECT NUMBER: 17009

E401

08/09/21 19:11:55

LEVEL 3
ROOF TOP

LEVEL 02
MEZZANINE

LEVEL 01
GALLERY

LEVEL 00

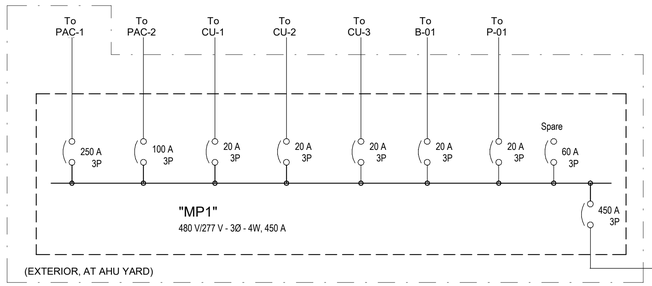

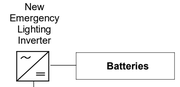

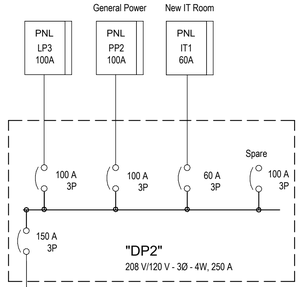

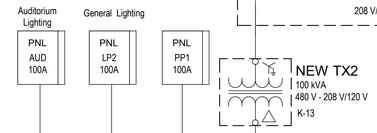

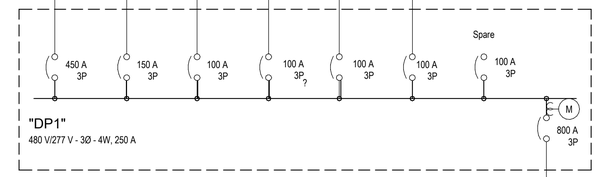

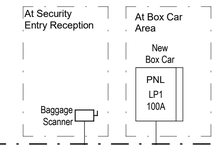

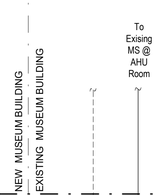

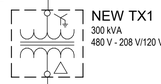

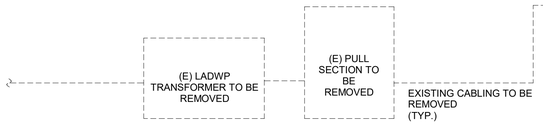

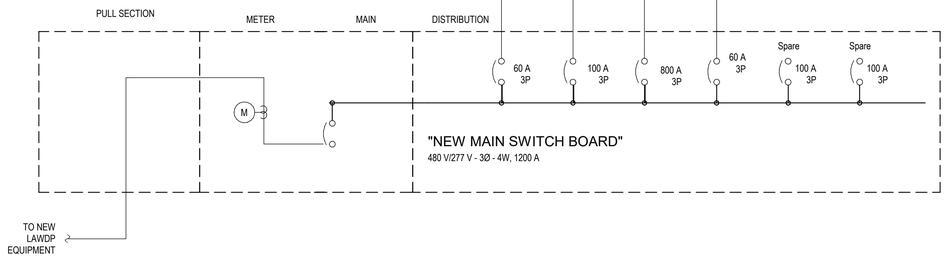

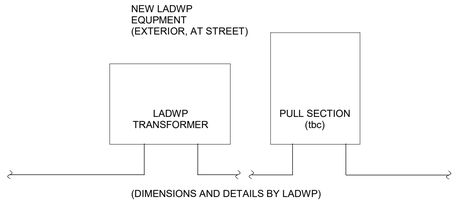

NOTES:

1. LEAVE 6FT HEIGHT OR TO BOTTOM OF STRUCTURE CLEAR OVER TOP OF THE FULL FOOTPRINT OF ALL ELECTRICAL EQUIPMENT PER CEC.
2. BRANCH CIRCUIT PANELS TO BE PROVIDED WITH MAIN INCOMING BREAKER.
3. APPLICATION AND COORDINATION FOR SITE CONSTRUCTION POWER BY GENERAL CONTRACTOR.
4. FINAL PHASING TO ACHIEVE THE CHANGE OVER FROM THE EXISTING LADWP TRANSFORMER FEED TO THE NEW LADWP TRANSFORMER FEED TO BE COORDINATED BY THE GENERAL CONTRACTOR VIA COMMUNICATIONS WITH LADWP ON BEHALF OF OWNER.
5. LADWP TO CONFIRM IF NEW METHANE PULL BOX IS REQUIRED.
6. TIMING AND SHUT DOWN WINDOW FOR THE BACK-FEEDING OF THE NEW CABLING FROM NEW MS TO THE EXISTING MS TO BE COORDINATED BY THE GENERAL CONTRACTOR IN COMMUNICATIONS WITH THE OWNER.
7. PROVIDE DISCONNECTS LOCAL TO M & P EQUIPMENT LOCATIONS.
8. EMERGENCY LIGHTING INVERTER AND BATTERIES TO BE PROCURED AS PACKAGED CENTRAL BATTERY SYSTEM WITH INTEGRAL DISTRIBUTION BOARD FOR BRANCH CIRCUITS TO EMERGENCY LIGHTING (MIN 36 CIRCUITS).

NOT FOR CONSTRUCTION

09.AUG.2021

belzberg architects
2321 MAIN STREET
SANTA MONICA, CA 90405
310.453.9611
www.belzbergarchitects.com

ARUP
Arup North America Ltd.
900 Wilshire Boulevard,
19th Floor
Los Angeles CA 90017
Tel: 310 578 4400
www.arup.com

#	DESCRIPTION	DATE

HOLOCAUST MUSEUM LA EXPANSION

100 THE GROVE DRIVE
LOS ANGELES, CA 90036

ELECTRICAL SINGLE LINE DIAGRAM

PROJECT NUMBER: 17009

E501

08/09/21 19:11:55

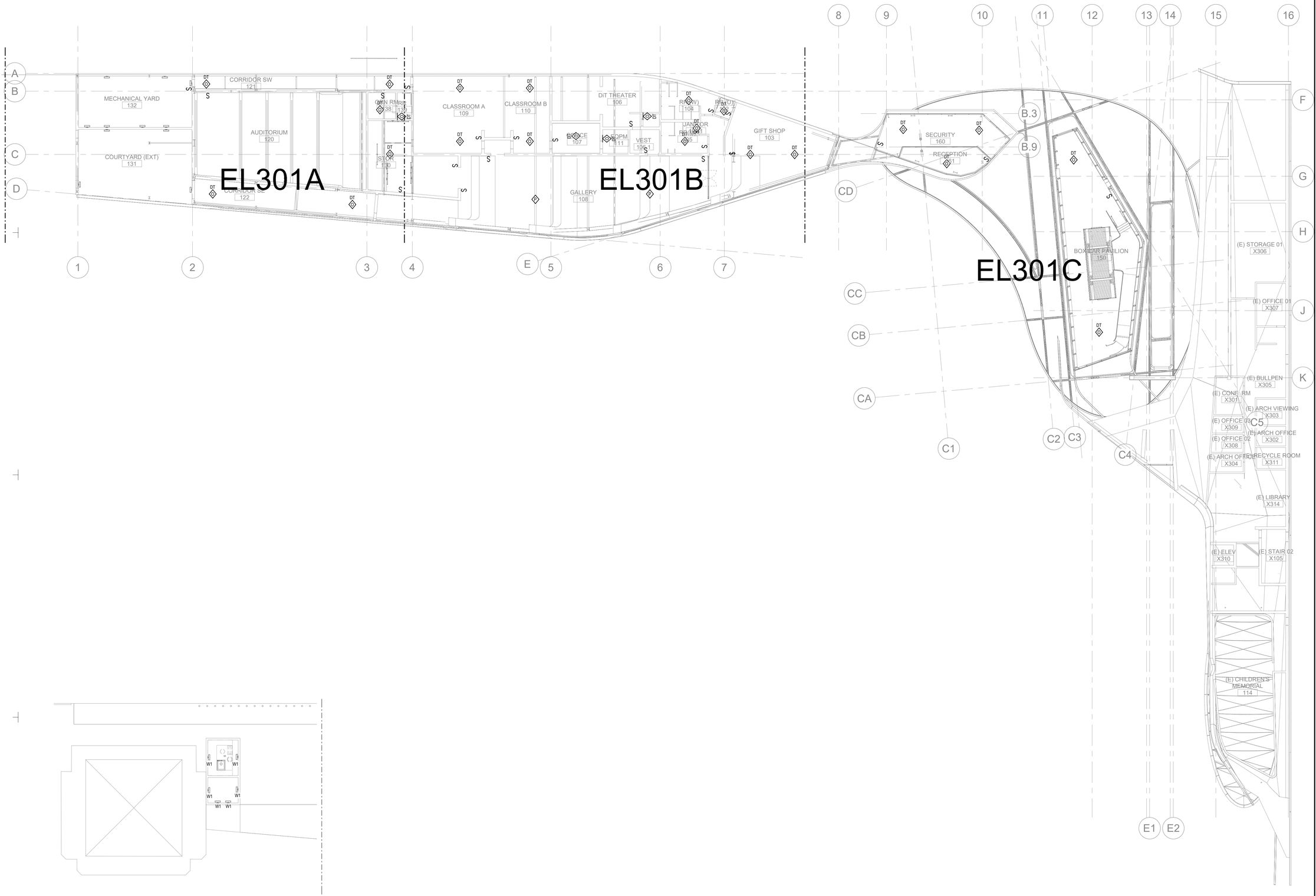

2 BOILER AND TRASH ENCLOSURE AREA
1/16" = 1'-0"

0 8' 16' 32'
SCALE: 1/16" = 1'-0"

N

NOT FOR CONSTRUCTION

09.AUG.2021

belzberg architects
2321 MAIN STREET
SANTA MONICA, CA 90405
310.453.9611
www.belzbergarchitects.com

ARUP
Arup North America Ltd.
900 Wilshire Boulevard,
19th Floor
Los Angeles CA 90017
Tel: 310 578 4400
www.arup.com

#	DESCRIPTION	DATE

HOLOCAUST MUSEUM LA EXPANSION

100 THE GROVE DRIVE
LOS ANGELES, CA 90036

ELECTRICAL LIGHTING GROUND FLOOR CEILING PLAN - OVERALL

PROJECT NUMBER: 17009

EL301

08/09/21 19:11:59

KEYED NOTES

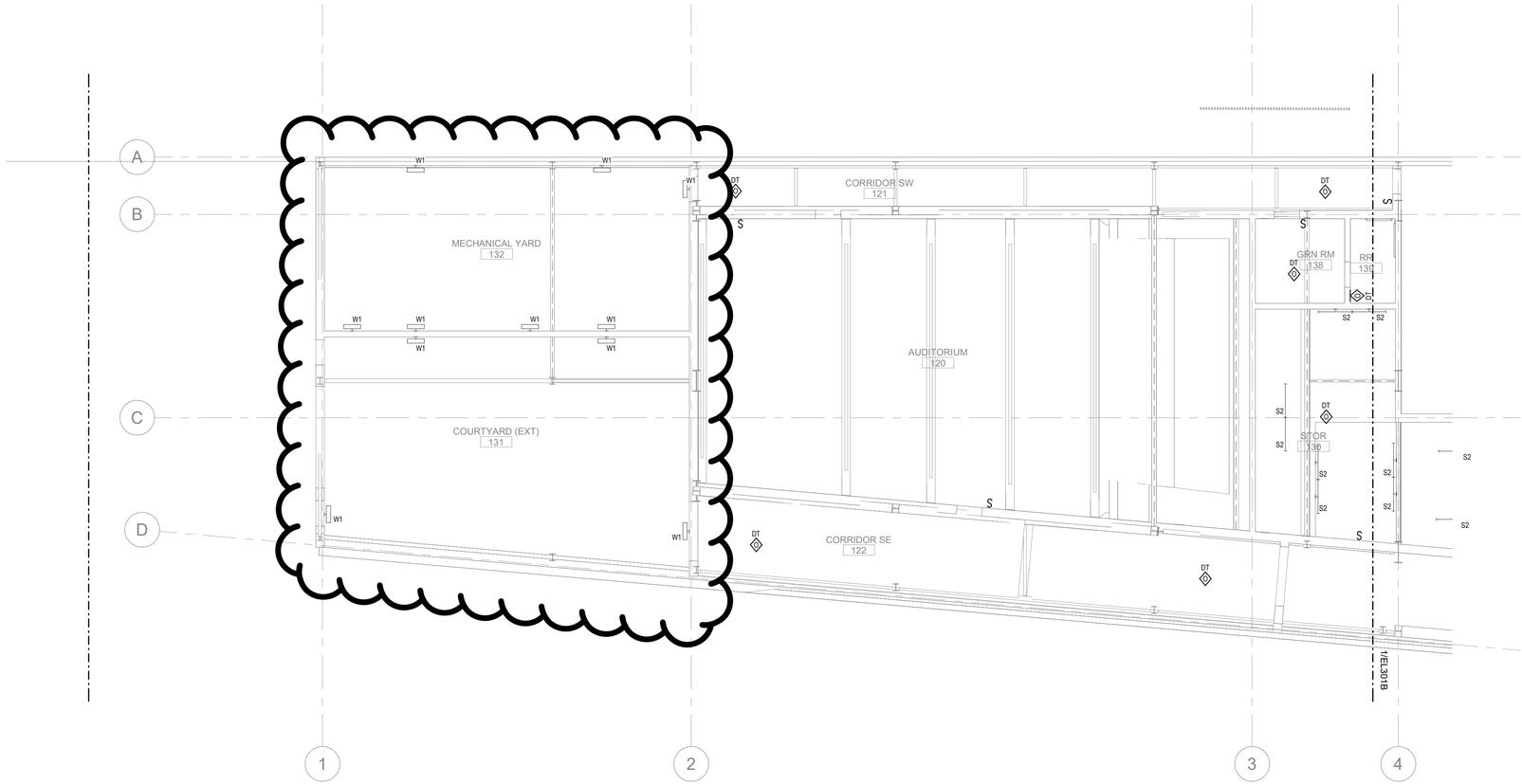

0 4' 8' 16'

SCALE: 1/8" = 1'-0"

N

NOT FOR CONSTRUCTION

09.AUG.2021

belzberg architects

2321 MAIN STREET
SANTA MONICA, CA 90405
310.453.9611

www.belzbergarchitects.com

ARUP

Arup North America Ltd.
900 Wilshire Boulevard,
19th Floor
Los Angeles CA 90017
Tel: 310 578 4400
www.arup.com

#	DESCRIPTION	DATE

HOLOCAUST MUSEUM LA EXPANSION

100 THE GROVE DRIVE
LOS ANGELES, CA 90036

ELECTRICAL LIGHTING
LEARNING CENTER
GROUND FLOOR
CEILING PLAN - SOUTH

PROJECT NUMBER: 17009

EL301A

08/09/21 19:12:03

KEYED NOTES

1 PROVIDE COMBINATION OCCUPANCY SENSOR AND PHOTOCELL IN SINGLE DEVICE.

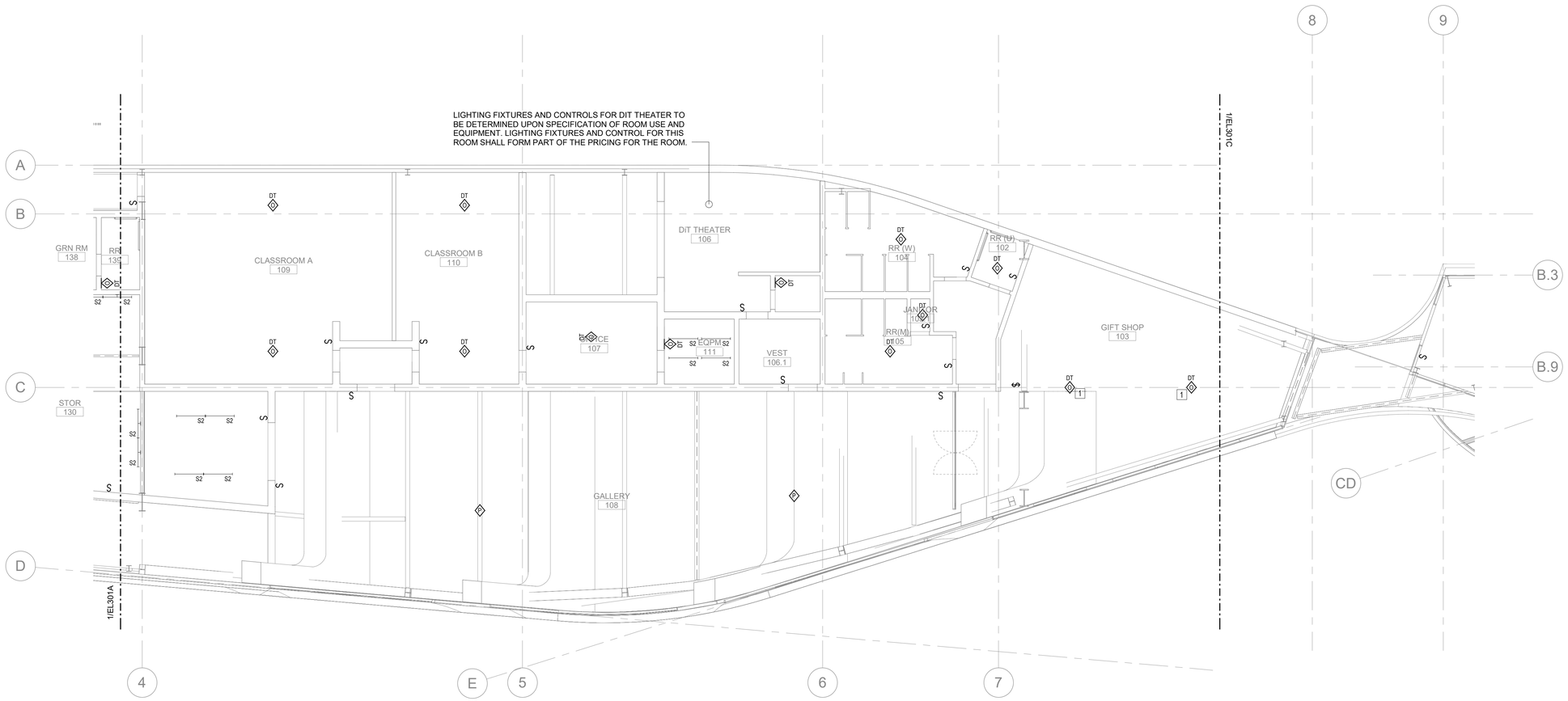

0 4' 8' 16'
SCALE: 1/8" = 1'-0"

N

NOT FOR CONSTRUCTION

09.AUG.2021

belzberg architects
2321 MAIN STREET
SANTA MONICA, CA 90405
310.453.9611
www.belzbergarchitects.com

ARUP
Arup North America Ltd.
900 Wilshire Boulevard,
19th Floor
Los Angeles CA 90017
Tel: 310 578 4400
www.arup.com

#	DESCRIPTION	DATE

HOLOCAUST MUSEUM LA EXPANSION

100 THE GROVE DRIVE
LOS ANGELES, CA 90036

ELECTRICAL LIGHTING
LEARNING CENTER
GROUND FLOOR
CEILING PLAN - NORTH

PROJECT NUMBER: 17009

EL301B

08/09/21 19:12:06

KEYED NOTES

1 PROVIDE COMBINATION OCCUPANCY SENSOR AND PHOTOCELL IN SINGLE DEVICE.

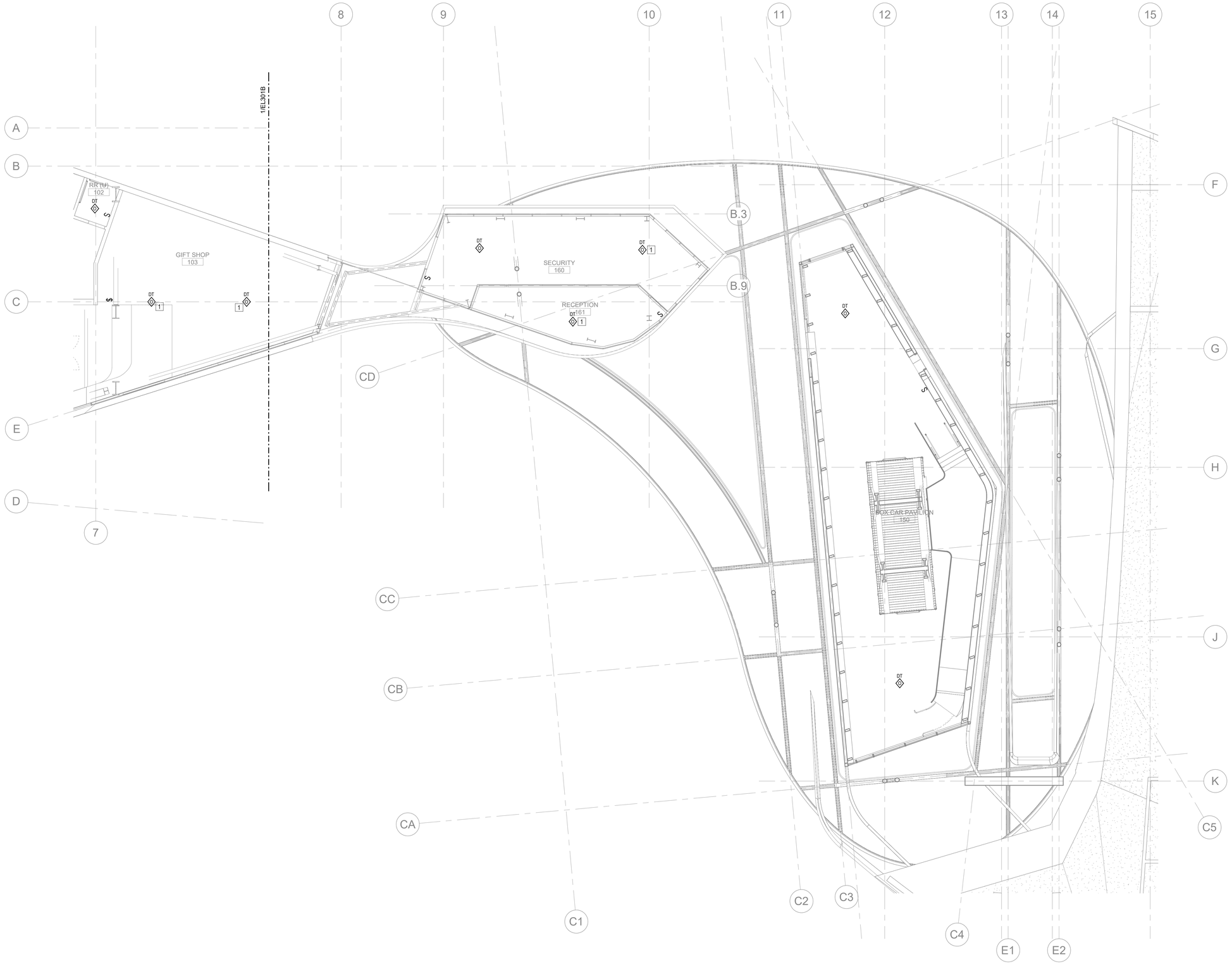

SCALE: 1/8" = 1'-0"

0 4' 8' 16'

N

NOT FOR CONSTRUCTION

09.AUG.2021

ba
belzberg architects

2321 MAIN STREET
SANTA MONICA, CA 90405
310.453.9611

www.belzbergarchitects.com

ARUP

Arup North America Ltd.
900 Wilshire Boulevard,
19th Floor
Los Angeles CA 90017
Tel: 310 578 4400
www.arup.com

#	DESCRIPTION	DATE

HOLOCAUST MUSEUM LA EXPANSION

100 THE GROVE DRIVE
LOS ANGELES, CA 90036

ELECTRICAL LIGHTING BOXCAR GROUND FLOOR CEILING PLAN

PROJECT NUMBER: 17009

EL301C

09/09/21 19:12:11

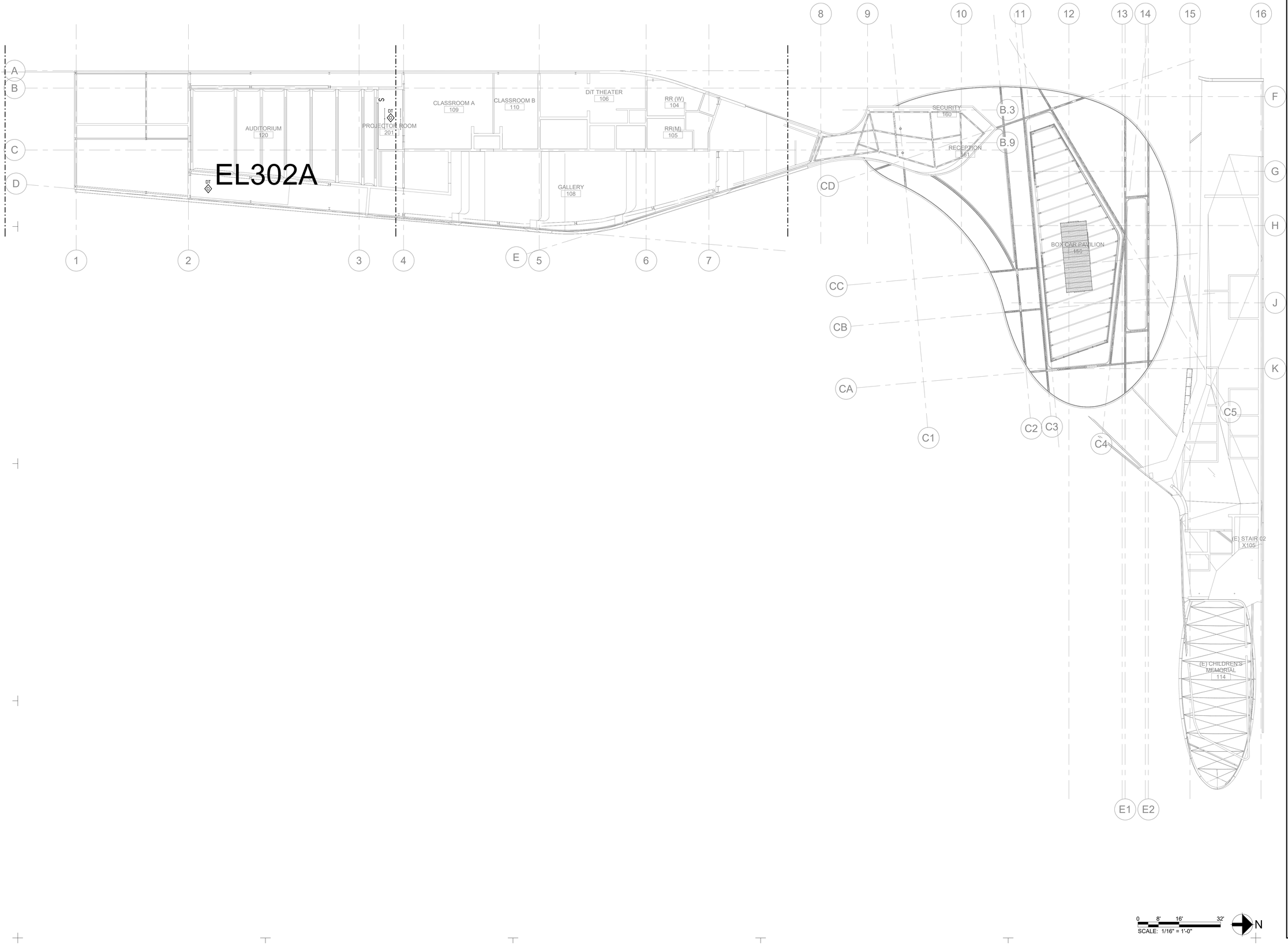

0 8' 16' 32'

SCALE: 1/16" = 1'-0"

N

NOT FOR CONSTRUCTION

09.AUG.2021

ba
belzberg architects
2321 MAIN STREET
SANTA MONICA, CA 90405
310.453.9611
www.belzbergarchitects.com

ARUP
Arup North America Ltd.
900 Wilshire Boulevard,
19th Floor
Los Angeles CA 90017
Tel: 310 578 4400
www.arup.com

#	DESCRIPTION	DATE

HOLOCAUST MUSEUM LA EXPANSION

100 THE GROVE DRIVE
LOS ANGELES, CA 90036

ELECTRICAL LIGHTING MEZZANINE CEILING PLAN - OVERALL

PROJECT NUMBER: 17009

EL302

08/09/21 19:12:16

KEYED NOTES

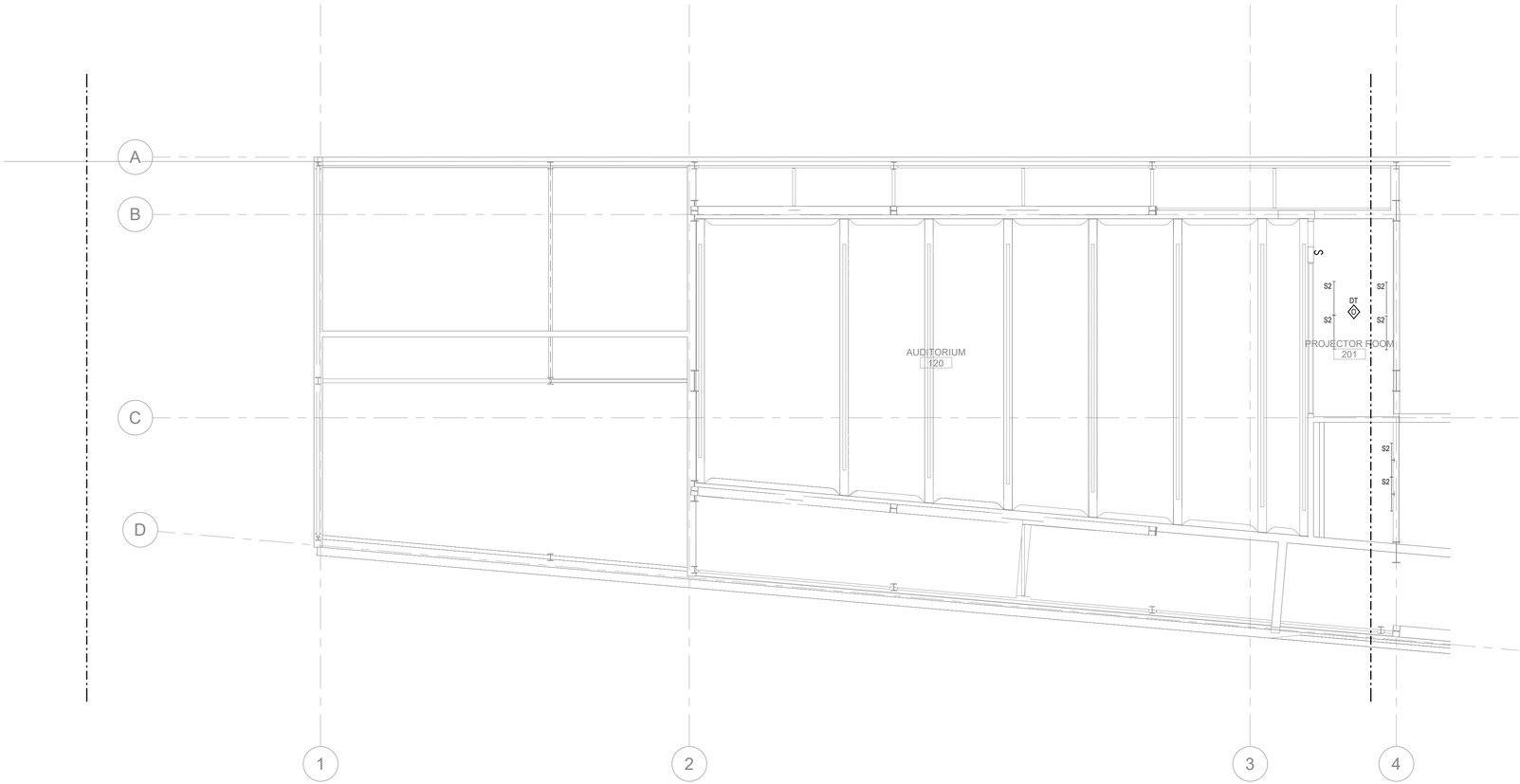

0 4' 8' 16'
SCALE: 1/8" = 1'-0"

N

NOT FOR CONSTRUCTION

09.AUG.2021

ba
belzberg architects
2321 MAIN STREET
SANTA MONICA, CA 90405
310.453.9611
www.belzbergarchitects.com

ARUP
Arup North America Ltd.
900 Wilshire Boulevard,
19th Floor
Los Angeles CA 90017
Tel: 310 578 4400
www.arup.com

#	DESCRIPTION	DATE

HOLOCAUST
MUSEUM LA
EXPANSION

100 THE GROVE DRIVE
LOS ANGELES, CA 90036

ELECTRICAL LIGHTING
LEARNING CENTER
MEZZANINE CEILING
PLAN - SOUTH

PROJECT NUMBER: 17009

EL302A

08/09/21 19:12:19

TELECOMMUNICATIONS GENERAL NOTES

1. NOT ALL SYMBOLS ON THIS SHEET ARE NECESSARILY USED AS PART OF THIS PROJECT. REFER TO THE PLANS, ELEVATIONS, SECTIONS, SCHEDULES, DETAILS AND SPECIFICATIONS TO DETERMINE THE SCOPE OF WORK.
2. THE WORK, INCLUDING MATERIALS, METHODS, ASSEMBLIES, ETC., SHALL COMPLY WITH THE MINIMUM REQUIREMENTS OF THE GOVERNING LAWS, ORDINANCES, AND REGULATIONS OF ALL FEDERAL, STATE, DISTRICT, AND LOCAL AUTHORITIES HAVING JURISDICTION OVER THE PROJECT. NO PART OF THE CONTRACT DOCUMENTS MAY BE CONSTRUED TO REQUIRE OR PERMIT WORK CONTRARY TO A GOVERNING LAW, ORDINANCE, OR REGULATION. IMMEDIATELY UPON RECOGNIZING SUCH, THE CONTRACTOR SHALL REPORT TO THE OWNER ANY WORK THAT IS IN APPARENT CONFLICT WITH APPLICABLE CODES.
3. THE WORK INCLUDES, BUT IS NOT LIMITED TO, THE ITEMS OUTLINED IN THESE CONSTRUCTION DOCUMENTS AS WELL AS ALL INCIDENTAL ITEMS REQUIRED TO PROVIDE COMPLETE AND OPERATIONAL SYSTEMS. WHERE REFERENCE IS MADE TO A REQUIREMENT THAT EXCEEDS MINIMUM CODE/STANDARD REQUIREMENTS, THE CONSTRUCTION DOCUMENT REQUIREMENTS SHALL TAKE PRECEDENCE.
4. THESE DRAWINGS ARE TO BE USED IN CONJUNCTION WITH THE TELECOMMUNICATIONS SPECIFICATIONS AND OWNER'S REQUIREMENTS. ANY DISCREPANCY BETWEEN THE DRAWINGS AND THE SPECIFICATIONS SHALL BE REPORTED FOR RESOLUTION TO THE OWNER OR OWNER'S REPRESENTATIVE PRIOR TO INSTALLATION, WHERE QUANTITIES DIFFER BETWEEN DRAWINGS AND SPECIFICATIONS, THE HIGHER COUNT BETWEEN EACH SHALL PREVAIL.
5. THE TELECOMMUNICATIONS DRAWINGS ARE PART OF A LARGER SET OF DRAWINGS. THE WORK DESCRIBED BY THE DRAWINGS OF ANY ONE DISCIPLINE MAY BE AFFECTED BY THE WORK AND REQUIREMENTS DESCRIBED ON DRAWINGS OF ANOTHER DISCIPLINE AND MAY REQUIRE REFERENCE TO THE DRAWINGS OF ANOTHER DISCIPLINE. CONTRACTOR IS RESPONSIBLE FOR COORDINATING WITH OTHER DISCIPLINES/TRADES WITHIN THE FIELD TO DETERMINE HARMONIOUS ROUTING AND ALIGN CABLING TERMINATION WITH FIT AND FINISHES OF THE CONSTRUCTION.
6. THE ARCHITECTURAL DRAWINGS ESTABLISH AND COORDINATE THE FINISHED APPEARANCE AND EXACT LOCATION OF EXPOSED ELEMENTS OF THE WORK, INCLUDING THAT WORK THAT IS ILLUSTRATED PRIMARILY THROUGH THESE DRAWINGS. CABLING LOCATIONS SHOWN ON THESE DRAWINGS ARE DIAGRAMMATIC. REFER TO ARCHITECTURAL DRAWINGS FOR DIMENSIONED LOCATIONS AND ALIGNMENTS.
7. COORDINATE EXACT MOUNTING LOCATIONS AND HEIGHTS OF ALL DEVICES MOUNTED TO, AS WELL AS PENETRATION POINTS AND DETAILS FOR CABLE ROUTING, WITH THE ARCHITECT. CONTRACTOR SHALL MAKE EFFORT TO RESPECT THE SYMMETRY OF THE STRUCTURE WHEN LOCATING DEVICES. OBTAIN APPROVAL OF EXACT DEVICE LOCATIONS WITH ARCHITECT PRIOR TO ROUGH-IN.
8. CONTRACTOR SHALL NOT NOTCH, CUT OR BORE ANY STRUCTURAL MEMBER WITHOUT PRIOR WRITTEN APPROVAL FROM THE ARCHITECT AND STRUCTURAL ENGINEER.
9. THE CONTRACTOR SHALL MAINTAIN A COPY OF THE SPECIFICATIONS AND DRAWINGS AT THE JOB SITE, SHALL MAINTAIN DAILY MARKUPS OF ACTUAL INSTALLATION TO ACCURATELY RECORD FIELD CONDITIONS, AND SHALL PRESENT FOR REVIEW UPON REQUEST.
10. PRIOR TO PERFORMING WORK, IMMEDIATELY NOTIFY THE OWNER, OWNER'S REPRESENTATIVE, IN WRITING, OF OBSERVATIONS OR CONDITIONS DISCOVERED THAT WOULD PREVENT INSTALLATION ACCORDING TO DRAWINGS AND SPECIFICATIONS.
11. PREPARE A SET OF MARKED UP PLANS FOR OWNER'S OR OWNER'S REPRESENTATIVE'S APPROVAL PRIOR TO PRODUCTION OF AS-BUILT DRAWINGS FOR RECORD DOCUMENTATION.
12. PATHWAYS AND CONDUIT
    - A. INSTALL EQUIPMENT, DEVICES AND PATHWAYS, SUCH THAT CABLE TRAY, RUNWAY, CONDUITS, CABLE HANGERS, AND PULL BOXES, ETC. ADHERE TO STATE AND LOCAL CODES AND REGULATORY REQUIREMENTS FOR SEISMIC BRACING.
    - B. INSTALL CONDUIT PATHWAYS PER TIA/EIA-569-LATEST EDITION AND BICSI (BUILDING INDUSTRY CONSULTING SERVICES INTERNATIONAL) TDMM (TELECOMMUNICATIONS DISTRIBUTION METHODS MANUAL) LATEST EDITION.
    - C. CONDUIT ROUTING, WHERE SHOWN ON DRAWINGS, IS DIAGRAMMATIC IN NATURE. CONTRACTOR TO DETERMINE CONDUIT ROUTES TO SUIT FIELD CONDITIONS WHILE CONFORMING TO SPECIFICATIONS.
    - D. CONTRACTOR TO PREPARE SHOP DRAWINGS SHOWING EXACT CONDUIT ROUTES AND INDICATING PENETRATION TYPES.
    - E. COORDINATE REQUIREMENTS AND ROUTING WITH OTHER TRADES.
    - F. ROUTE CONDUIT, CABLE TRAYS AND OTHER PATHWAYS PERPENDICULAR OR PARALLEL TO BUILDING LINES IN GENERAL.
    - G. ROUTE TELECOMMUNICATIONS CABLES NO LESS THAN 6 INCHES FROM ANY POWER SOURCE OR FLORESCENT LIGHTING FIXTURE AND NO LESS THAN 4 FEET FROM ANY TRANSFORMER OR MOTOR.
    - H. CONDUITS WITH A 2" INSIDE DIAMETER OR LESS WILL HAVE A BEND RADIUS OF 6 TIMES THE INSIDE DIAMETER. CONDUITS WITH LARGER THAN 2" INSIDE DIAMETER WILL HAVE A BEND RADIUS OF 10 TIMES THE INSIDE DIAMETER.
    - I. CONDUIT RUNS SHALL NOT EXCEED 180 DEGREES OR TWO 90 DEGREE BENDS WITHOUT AN APPROPRIATE NEMA RATED PULL BOX OR/AND ADDITIONAL BEND OF UP TO 90 DEGREES, UNLESS LAST BEND IS WITHIN 12 INCHES OF THE CONDUIT END.
    - J. PROPERLY FIRE SEAL CONDUIT AND RACEWAY PENETRATIONS THROUGH FIRE RATED WALLS AND FLOORS TO MAINTAIN THE FIRE SEPARATION RATING. PROVIDE FIRE SEALING ASSEMBLIES THAT ARE UL LISTED FOR THE APPLICATION. COORDINATE REQUIREMENTS WITH LOCAL FIRE MARSHALL PRIOR TO INSTALLATION. DO NOT MIX PRODUCT BETWEEN MANUFACTURED ASSEMBLIES.
    - L. PROVIDE EXPANSION/DEFECTION FITTINGS FOR CONDUITS AT STRUCTURAL EXPANSION JOINT CROSSINGS.
    - M. PROVIDE PLASTIC BUSHING ON EXPOSED END OF ALL CONDUIT AND SLEEVES, WHETHER VISIBLE OR NOT.
    - N. ALL SLEEVES SHALL BE FILED CLEAN, DEBURRED, CAPPED, LABELED AND FURNISHED WITH A MEASURED PULL TAPE BY THE CONTRACTOR.
    - O. ALL CONDUIT STUBS ARE TO BE LOCATED PAST SOFFITS, HARD LID CEILING AND INACCESSIBLE AREAS.
    - P. PROVIDE MINIMUM 1 INCH SIZE CONDUIT FOR HORIZONTAL DISTRIBUTION AND TELECOMMUNICATIONS. CONSOLIDATION OF CONDUITS IS ALLOWED WHEN EQUAL OR GREATER CONSOLIDATED AREA IS PROVIDED. REFERENCE CONDUIT SIZING TABLES ON THE DETAILS SHEET WITHIN THIS DRAWING SET.
    - Q. PROVIDE DEDICATED CONDUIT STUB PER TELECOMMUNICATIONS DEVICE BACK BOX. DAISY-CHAINING DEVICE BOXES IS PROHIBITED UNLESS SPECIFICALLY NOTED ON FLOOR PLANS.
    - R. PROVIDE A PULL STRING IN EMPTY/UNUSED DISTRIBUTION CONDUITS AND CONDUITS SERVING TELECOMMUNICATIONS DEVICES SUITABLE FOR A 200LB PULL TENSION MINIMUM.
    - S. IN AREAS NOT SUPPLIED WITH CONDUIT OR CABLE TRAY, PROVIDE DEDICATED SUPPORT (E.G. J-HOOKS) FOR CABLE SUPPORT HANGERS (OR SIMILAR PATHWAY COMPONENTS) INTENDED FOR TELECOMMUNICATIONS CABLES A MINIMUM OF EVERY 4 FEET.
    - T. DO NOT SHARE SUPPORT WITH OTHER TRADES/SYSTEMS PROVIDE AN INDEPENDENT PATHWAY TO SECURITY PANEL FOR ALL ACCESS CONTROL DEVICES.
    - U. PROVIDE TELECOMMUNICATION CONDUITS FOR CABLING ROUTED THROUGH NON-ACCESSIBLE SPACE (E.G. "HARD LID CEILING). SIZE CONDUITS TO MAINTAIN A FILL CAPACITY OF NO MORE THAN 40% (INCLUDING A 50% SPARE CAPACITY).
    - V. ALL OUTLETS AND DEVICES SHALL BE FLUSH WITH THE WALL, FLOOR FINISHED OR CEILING FINISHED UNLESS OTHERWISE NOTED.
    - W. ALL HORIZONTAL PATHWAYS SHALL BE ROUTED SUCH THAT THE TOTAL HORIZONTAL END TO END CABLE LENGTHS SHALL NOT EXCEED 295 FEET. IF THIS REQUIREMENT CANNOT BE MET NOTIFY THE OWNER OR OWNER'S REPRESENTATIVE PRIOR TO INSTALLATION.
    - X. WHEN PENETRATING THE SLAB, CONDUITS/SLEEVES SHALL BE TERMINATED 3 INCHES ABOVE THE FINISHED SLAB/FLOOR, AT MINIMUM.
    - Y. ALL CABLE PATHWAYS SHALL BE CONCEALED IN WALLS AND FLOOR SPACES WHERE POSSIBLE UNLESS OTHERWISE NOTED.
14. INSTALL TELECOMMUNICATIONS DEVICES AT HEIGHTS NOTED AFTER VERIFYING ALL DETAILS WITH ARCHITECT AND CONTRACTOR THAT IS INSTALLING SUPPORTED DEVICES. MOUNTING HEIGHTS SHOWN ARE FROM FINISHED FLOOR TO THE CENTERLINE OF THE BACK BOX. VERIFY HEIGHTS ARE THE SAME AS ACCOMPANYING POWER RECEPTACLES WHEN APPROPRIATE AND NOTIFY OWNER, OR OWNER'S REPRESENTATIVE OF ANY DISCREPANCY.
15. PROVIDE A 24" MINIMUM SEPARATION BETWEEN "BACK-TO-BACK" TELECOMMUNICATIONS, POWER OR SIGNAL DEVICES IN FRAMED WALLS.
16. CABLES SHALL ONLY SUPPORTED BY APPARATUS MEANT TO DO SO. DO NOT SUPPORT CABLES ON PLUMBING PIPES, ELECTRICAL CONDUITS OR MECHANICAL DUCTWORK. WHEN J-HOOKS CAN NOT BE ATTACHED TO THE WALL OR STRUCTURAL MEMBERS, PROVIDE NEW 12 GAUGE CEILING HANGER WIRES TO SUPPORT J-HOOKS, INDEPENDENT OF T-BAR HANGER WIRES AND LIGHTING HANGER WIRES. DO NOT TIE CABLES TO OTHER STRUCTURES NOT INTENDED FOR THIS SPECIFIC USE.
17. GROUP AND DRESS EXPOSED TELECOMMUNICATIONS CABLES USING REUSABLE 1 /2 INCH MINIMUM WIDTH HOOK AND LOOP TYPE CABLE WRAPS. PLASTIC ZIP TIE WRAPS ARE NOT ALLOWED.
18. ANY POWER RECEPTACLES, SWITCHES AND ETC. SHOWN ON THESE DRAWINGS ARE FOR INFORMATION ONLY. PLEASE REFER TO ELECTRICAL DRAWINGS FOR ACTUAL QUANTITIES, TYPES AND LOCATIONS.
19. MDF/IDF REQUIREMENTS OF ALL TRADES
    - A. COMPONENTS NOT RELATED TO THE SUPPORT OF THE TELECOMMUNICATIONS ROOM(S) FUNCTION (E.G. PIPING, DUCTWORK, PNEUMATIC TUBING, ETC.) SHALL NOT BE INSTALLED IN, PASS THROUGH, OR ENTER THE TELECOMMUNICATIONS ROOM.
    - B. COMPONENTS CONTAINING LIQUID MUST BE LOCATED OUTSIDE THE TELECOMMUNICATION ROOM(S) WHEN POSSIBLE. WHEN NOT POSSIBLE, TUBING CONTAINING LIQUIDS MUST BE ENCLOSED WITH A SPLASH GUARD AND MUST HAVE DRAINAGE THAT PREVENTS THE BUILDUP OF LIQUID WITHIN THE TELECOMMUNICATIONS ROOMS.
20. THESE DRAWINGS DO NOT INCLUDE PROVISIONS FOR OUTSIDE PLANT CABLE, CCTV, OR FULL AV NETWORK REQUIREMENTS.
    - A. OUTSIDE PLANT PATHWAY TO EXISTING ISP TELECOMMUNICATIONS VAULT WILL BE COORDINATED BY CIVIL. OUTSIDE PLANT BACKBONE CABLE NOT SHOWN IN THESE DESIGN DOCUMENTS.
    - B. SECURITY NETWORK OUTLET LOCATIONS WILL BE SHOWN ONLY ON SECURITY DRAWINGS BUT ARE INCLUDED IN THE STRUCTURED CABLING CONTRACTOR'S SCOPE.
    - C. NETWORK REQUIREMENTS FOR AV WILL BE UPDATED WHEN FULL AV DESIGN IS PROVIDED.

ICT AND STRUCTURED CABLING SYMBOLS

NETWORK DROP SYMBOL KEY & NOTES

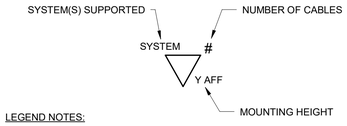

LEGEND NOTES:

1. UNLESS OTHERWISE NOTED ON THE DRAWINGS, ALL DEVICE REQUIREMENTS SHOWN ON THIS SHEET ARE STANDARD FOR ALL STRUCTURED CABLING SYMBOLS SHOWN ON THE DRAWINGS.
2. THE SYMBOL KEY SHOWN APPLIES TO ALL NETWORK DROP LOCATIONS, REGARDLESS OF MOUNTING TYPE.
3. REFER TO ARCHITECTURAL DRAWINGS FOR DIMENSIONAL LOCATION OF NETWORK DROPS. STRUCTURED CABLING DRAWINGS ARE INTENDED TO SHOW DEVICE COUNTS AND DESIGN INTENT.
4. REFER TO SPECIFICATION SHEETS FOR DEVICE REQUIREMENTS.
5. REFER TO DETAIL SHEETS IN THIS DRAWING PACKAGE FOR ADDITIONAL INFORMATION ON MOUNTING.
6. PROVIDE A COMPLEMENT OF 4-PAIR UTP CATEGORY CABLES FOR ALL STRUCTURED CABLING OUTLETS. QUANTITY OF CABLES TO MATCH THE NUMBER OF PORTS SHOWN FOR EACH OUTLET LOCATION.
7. ALL OUTLETS SHALL BE MOUNTED AT 18" AFF UNLESS OTHERWISE NOTED ON THE ARCHITECTURAL DRAWINGS.

SYSTEM LEGEND

TAG	SYSTEM DESCRIPTION
AV	AUDIOVISUAL SYSTEM
AP	WIRELESS ACCESS POINT
SA	ACCESS CONTROL CARD READER
SC	CCTV SECURITY CAMERA
W	WALL PHONE, +42" AFF
WP	WEATHER PROOF, EXTERIOR
X	X-RAY/METAL DETECTOR

SYMBOL	DESCRIPTION	INFRASTRUCTURE BOX
⧖	WALL MOUNTED NETWORK DROP	2-GANG, FLUSH MOUNTED, 2.5" DEEP BOX WITH 1-GANG PLASTER RING
⧄	FLOOR CABLE COVER INSERT	REFER TO ARCHITECTURAL AND ELECTRICAL DRAWINGS FOR FLOOR CABLE COVER DETAILS.
⧀	CEILING MOUNTED NETWORK DROP	REFER TO ICT DETAILS SHEET FOR BOX DETAILS.
▽	RACEWAY/FURNITURE MOUNTED NETWORK DROP	REFER TO ICT DETAILS SHEET FOR BOX DETAILS.
⧖	ELECTRICAL POWER POLE MOUNTED NETWORK DROP	REFER TO ELECTRICAL DETAILS FOR POWER POLE COORDINATION.

PATHWAYS AND MISC SYMBOLS LIST

SYMBOL	DESCRIPTION
TXXX #	DETAIL REFERENCE: # = DETAIL NUMBER; TXXX = DRAWING NUMBER
	CABLE TRAY
	LADDER RACK
	INFLOOR CABLING DUCT
	SLEEVE / CONDUIT END
	CONDUIT OR SLEEVE GOING UP
	CONDUIT OR SLEEVE GOING DOWN
	CONDUIT GOING THROUGH
	ON FLOOR CABLE COVER
	TELECOM SPACES/ROOM OUTLINE
TZ-TR#	TELECOM ZONE SERVED BY EITHER TR OR ER/TR # = TR (OR ER/TR) NUMBER
PB	PULL BOX
	TELECOMMUNICATIONS GROUNDING BUSBAR
TGB	TGB: TELECOM GROUNDING BUS BAR (RISER)

SYMBOL	DESCRIPTION
TMGB	TMGB: TELECOM MAIN GROUNDING BUS BAR
	GROUND
	GEC: GROUND ELECTRODE CONDUCTOR
J J	J-HOOK PATH DESIGNATOR - J-HOOKS TO BE INSTALLED WITH MAXIMUM 4'-0" SEPARATION BETWEEN EACH AND NO MORE THAN 12" OF CABLE . CABLES SHALL ONLY BE SUPPORTED BY APPARATUS MEANT TO DO SO. DO NOT SUPPORT CABLES ON PLUMBING PIPE, ELECTRICAL CONDUIT, OR MECHANICAL DUCTWORK. USE MANUFACTURER'S RECOMMENDATIONS FOR CABLE FILL PER J-HOOK. WHEN J-HOOK CAN NOT BE ATTACHED TO THE ATTIC WALL OR ATTIC STRUCTURAL MEMBERS, PROVIDE NEW 12 GAUGE CEILING HANGER WIRES TO SUPPORT J-HOOK, INDEPENDENT OF T-BAR HANGER WIRES AND LIGHTING HANGER WIRES.
	SLEEVES - 2" EMT CONDUIT UNLESS OTHERWISE NOTED. EXTEND SLEEVES PAST SOFFITS & HARD LID CEILINGS. FIELD CONDITIONS MAY VARY. SEE PATHWAY AND SLEEVES DETAILS.
	CONDUIT CONCEALED IN CEILING OR WALL
	CONDUIT CONCEALED IN FLOOR CONDUIT EXPOSED OR SURFACE MOUNTED
T T	UNDERGROUND TELECOMMUNICATION CONDUIT DUCT BANK (NOT USED)
	FLEXIBLE METALLIC CONDUIT
	LINEAR RING PATHWAY (NOT USED)
	"EZ-PATH" TYPE FIRESTOP DEVICE, NOTES INDICATES SIZE AND QUANTITY.
J	CEILING MOUNTED JUNCTION BOX

ABBREVIATIONS

SYMBOL	DESCRIPTION
AFC	ABOVE FINISHED CEILING
AFF	ABOVE FINISHED FLOOR
AP	ACCESS POINT (WIRELESS)
AV	AUDIOVISUAL
AWG	AMERICAN WIRE GAUGE
BEP	BUILDING ENTRANCE PROTECTOR
BFC	BELOW FINISHED CEILING
BLDG	BUILDING
BMS	BUILDING MANAGEMENT SYSTEM
C	CONDUIT
CAT	CATEGORY
CRAC	COMPUTER ROOM AIR CONDITIONING (UNIT)
CP	CONSOLIDATION POINT
CPP	COPPER PATCH PANEL
DAS	DISTRIBUTED ANTENNA SYSTEM
DEMARC	DEMARCATION POINT
DWG	DRAWING
EDA	EQUIPMENT DISTRIBUTION AREA
EF	ENTRANCE FACILITY
EO	EQUIPMENT OUTLET
ER	EQUIPMENT ROOM
FAS	FIRE ALARM SYSTEM
FO	FIBER OPTIC
FOPP	FIBER OPTIC PATCH PANEL
FT	FEET
HDA	HORIZONTAL DISTRIBUTION AREA
HVAC	HEATING, VENTILATION AND AIR-CONDITIONING
HWM	HORIZONTAL WIRE MANAGER
IDF	INTERMEDIATE DISTRIBUTION FRAME
IP	INTERNET PROTOCOL
IN	INCHES
KVA	KILOVOLT- AMPERE
KW	KILOWATT
LAN	LOCAL AREA NETWORK
MAX	MAXIMUM
MDA	MAIN DISTRIBUTION AREA
MDF	MAIN DISTRIBUTION FRAME
MIN	MINIMUM
MMFO	MULTIMODE FIBER OPTIC
MTD	MOUNTED
MPOE	MAIN POINT OF ENTRY
N/A	NOT APPLICABLE
NIC	NOT IN CONTRACT
NO, #	NUMBER
NTS	NOT TO SCALE

SYMBOL	DESCRIPTION
OD	OUTSIDE DIAMETER
OSP	OUTSIDE PLANT
PB	PULL BOX
PoE	POWER OVER ETHERNET
PT	POKE THRU
PVC	POLYVINYL CHLORIDE
RF	RADIO FREQUENCY
RM	ROOM
RU	RACK MOUNT UNIT
SCS	STRUCTURED CABLING SYSTEM
SMF	SINGLE-MODE FIBER OPTIC
SPEC	SPECIFICATION
STP	SHIELDED TWISTED PAIR
TBD	TO BE DETERMINED
TE	TELECOMMUNICATIONS ENCLOSURE
TGB	TELECOMMUNICATIONS GROUNDING BUSBAR
TMGB	TELECOMMUNICATIONS MAIN GROUNDING BUSBAR
TPM	TECHNICAL PROJECT MANAGER
TR	TELECOMMUNICATIONS ROOM
TV	TELEVISION
TYP	TYPICAL
UL	UNDERWRITERS LABORATORIES INCORPORATED
UON	UNLESS OTHERWISE NOTED
UPS	UNINTERRUPTIBLE POWER SUPPLY
UTP	UNSHIELDED TWISTED PAIR
VWM	VERTICAL WIRE MANAGER
WAN	WIDE AREA NETWORK
WAP	WIRELESS ACCESS POINT
WAO	WORK AREA OUTLET
WLAN	WIRELESS LOCAL AREA NETWORK
WP	WEATHER PROOF
XPP	COAXIAL PATCH PANEL

DRAWING LIST

IT DRAWING LIST

DWG NO.	DRAWING TITLE
T000	TELECOMMUNICATIONS NOTES, SYMBOLS, & ABBREVIATIONS
T201	TELECOMMUNICATIONS GROUND FLOOR PLAN - OVERALL
T201A	TELECOMMUNICATIONS LEARNING CENTER GROUND FLOOR PLAN - SOUTH
T201B	TELECOMMUNICATIONS LEARNING CENTER GROUND FLOOR PLAN - NORTH
T201C	TELECOMMUNICATIONS BOXCAR GROUND FLOOR PLAN
T202	TELECOMMUNICATIONS MEZZANINE FLOOR PLAN - OVERALL
T202A	TELECOMMUNICATIONS LEARNING CENTER MEZZ FLOOR PLAN - SOUTH
T301	TELECOMMUNICATIONS GROUND FLOOR CEILING PLAN - OVERALL
T301A	TELECOMMUNICATIONS LEARNING CENTER GROUND FLOOR CEILING PLAN - SOUTH
T301B	TELECOMMUNICATIONS LEARNING CENTER GROUND FLOOR CEILING PLAN - NORTH
T301C	TELECOMMUNICATIONS BOXCAR GROUND FLOOR CEILING PLAN
T302	TELECOMMUNICATIONS LEARNING CENTER MEZZ CEILING PLAN - OVERALL
T302A	TELECOMMUNICATIONS LEARNING CENTER MEZZ CEILING PLAN - SOUTH
T401	TELECOMMUNICATIONS ENLARGED TELECOM ROOM PLAN

NOT FOR CONSTRUCTION

09.AUG.2021

belzberg architects
2321 MAIN STREET
SANTA MONICA, CA 90405
310.453.9611
www.belzbergarchitects.com

ARUP
Arup North America Ltd.
900 Wilshire Boulevard,
19th Floor
Los Angeles CA 90017
Tel: 310 578 4400
www.arup.com

#	DESCRIPTION	DATE

HOLOCAUST MUSEUM LA EXPANSION

100 THE GROVE DRIVE
LOS ANGELES, CA 90036

TELECOMMUNICATIONS NOTES, SYMBOLS, & ABBREVIATIONS

PROJECT NUMBER: 17009

T000

08/09/21 19:14:24

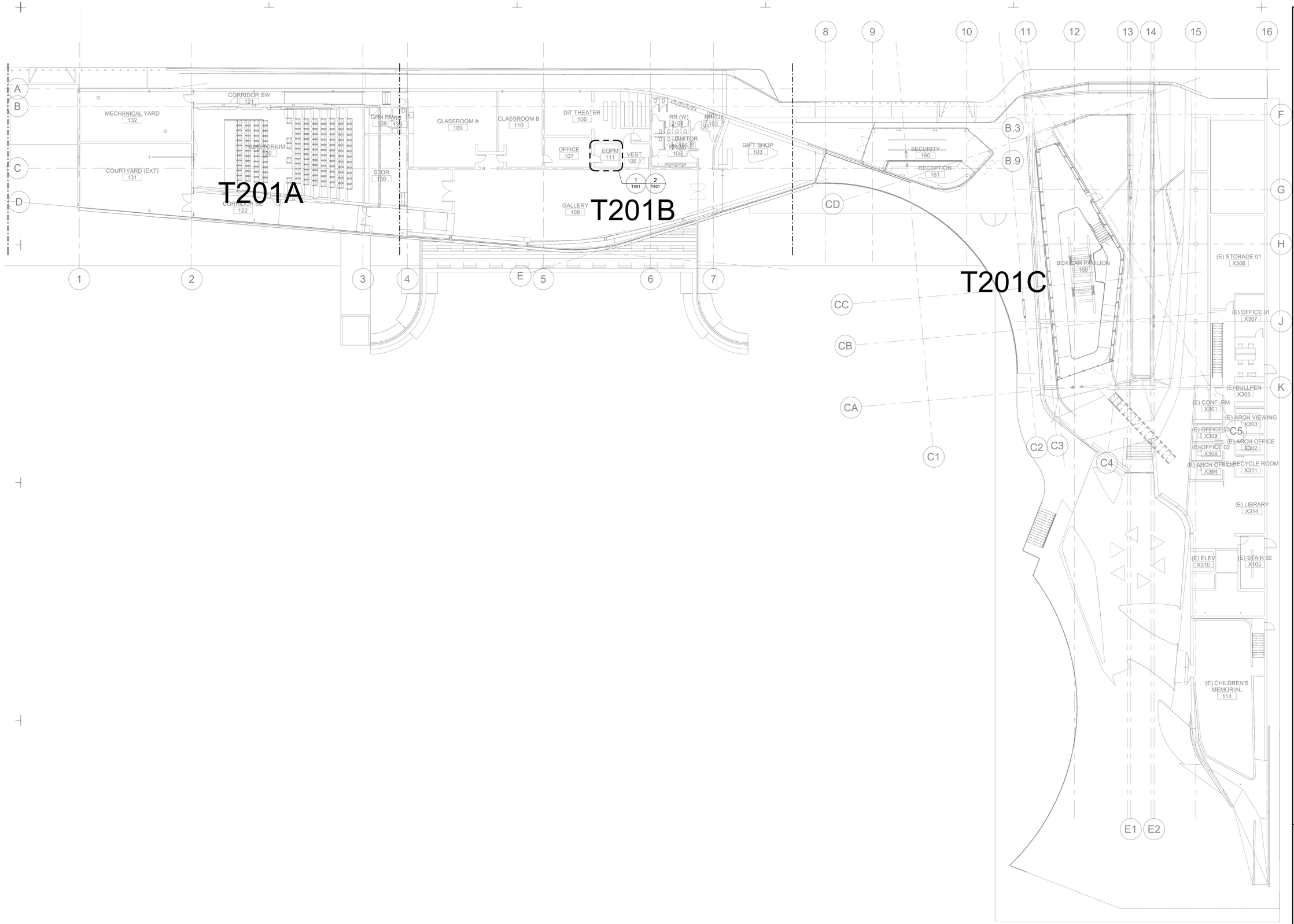

0 8' 16' 32'

SCALE: 1/16" = 1'-0"

N

NOT FOR CONSTRUCTION

09.AUG.2021

ba
belzberg architects
2321 MAIN STREET
SANTA MONICA, CA 90405
310.453.9611
www.belzbergarchitects.com

ARUP
Arup North America Ltd.
900 Wilshire Boulevard,
19th Floor
Los Angeles CA 90017
Tel: 310 578 4400
www.arup.com

#	DESCRIPTION	DATE

HOLOCAUST
MUSEUM LA
EXPANSION

100 THE GROVE DRIVE
LOS ANGELES, CA 90036

TELECOMMUNICATIONS
GROUND FLOOR PLAN
- OVERALL

PROJECT NUMBER: 17009

T201

08/09/21 19:14:34

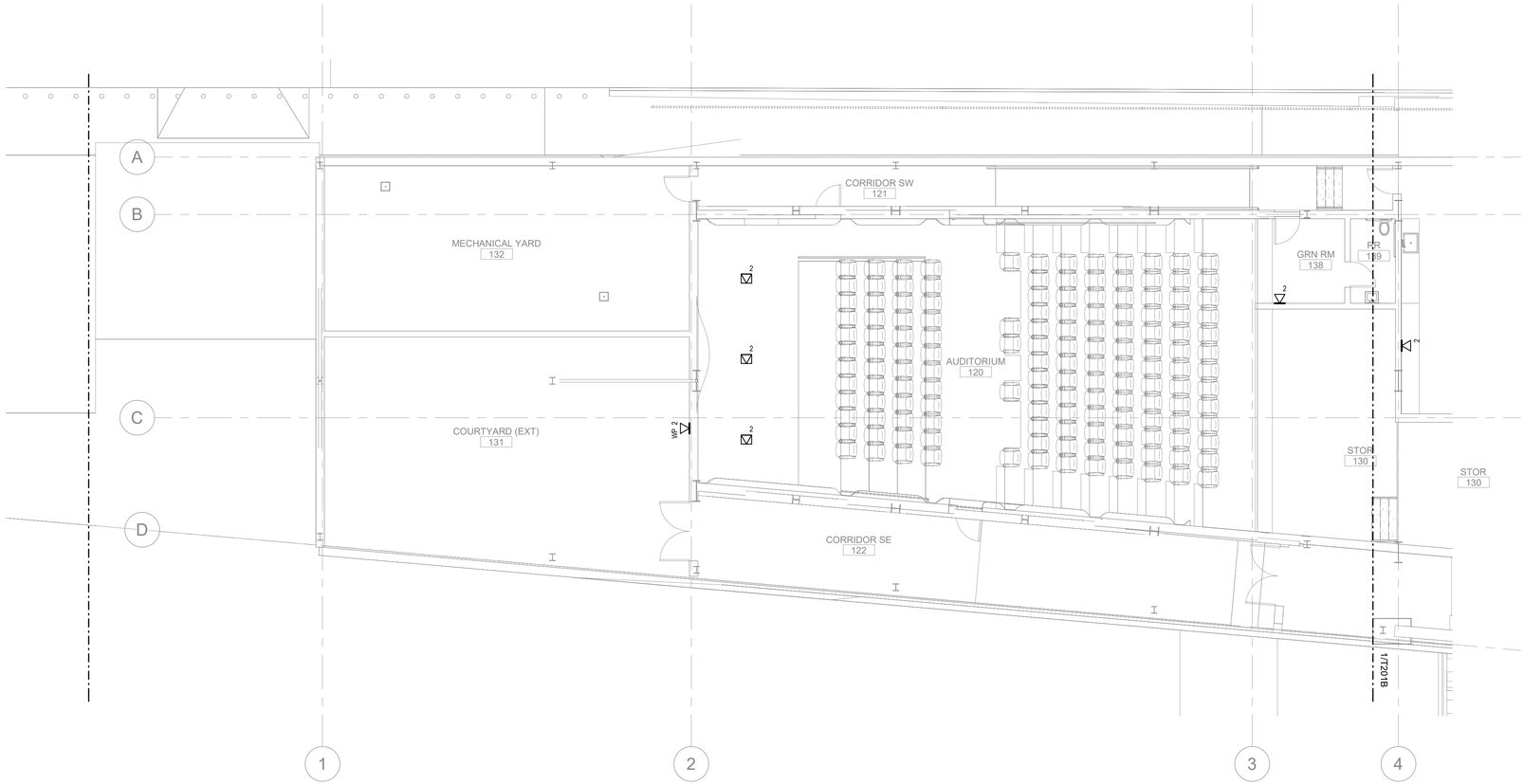

0 4' 8' 16'
SCALE: 1/8" = 1'-0"

N

NOT FOR CONSTRUCTION

09.AUG.2021

ba
belzberg architects
2321 MAIN STREET
SANTA MONICA, CA 90405
310.453.9611
www.belzbergarchitects.com

ARUP
Arup North America Ltd.
900 Wilshire Boulevard,
19th Floor
Los Angeles CA 90017
Tel: 310 578 4400
www.arup.com

#	DESCRIPTION	DATE

HOLOCAUST MUSEUM LA EXPANSION

100 THE GROVE DRIVE
LOS ANGELES, CA 90036

TELECOMMUNICATIONS LEARNING CENTER GROUND FLOOR PLAN - SOUTH

PROJECT NUMBER: 17009

T201A

08/09/21 19:14:40

SHEET NOTES:

1. OUTSIDE PLANT PATHWAY ROUTES TO EQUIPMENT ROOM (TO BE COORDINATED BY CIVIL):
   A. (2) 4" CONDUIT FROM EQUIPMENT ROOM TO EXISTING ISP TELECOMMUNICATIONS VAULT (SHOWN)
      a. FIBER AND COPPER CONNECTIONS TO BE FURNISHED AND INSTALLED BY ISP
   B. (2) 4" CONDUIT FROM EQUIPMENT ROOM TO EXISTING MDF (NOT SHOWN):
      a. INCLUDES BACKBONE CABLING (NOT SHOWN)
         - 48-STRAND OS2 (LC-LC UPC) INDOOR/OUTDOOR ARMOURED FIBER CABLE
         - 100-PAIR CAT3 UTP OUTDOOR COPPER CABLE

2. OUTSIDE PLANT REQUIREMENTS:
   A. SCHEDULE 40/80 PVC CONDUIT ENCASED IN CONCRETE
   B. MIN. 6" HORIZONTAL CLEARANCE ABOVE ANY CROSSED CONDUIT
   C. MIN. 12" VERTICAL CLEARANCE FROM ADJACENT CONDUIT
   D. DRAIN SLOPE OF 0.125" PER FOOT AWAY FROM BUILDING
   E. 40" SWEEPING BEND RADIUS

3. TELECOMMUNICATIONS VAULT REQUIREMENTS:
   A. MIN. 60" (L) X 36" (W) X 36 (D)
   B. TRAFFIC RATED, TILT-UP LID
   C. VAULTS ARE REQUIRED AT THE FOLLOWING CONDITIONS:
      a. WITHIN 50' CONDUIT LENGTH OF THE POINT OF ENTRY
      b. CONDUIT EXCEEDS 180-DEREE OF COMBINED HORIZONTAL AND VERTICAL BENDS
      c. CONDUIT EXCEEDS 300' LENGTH

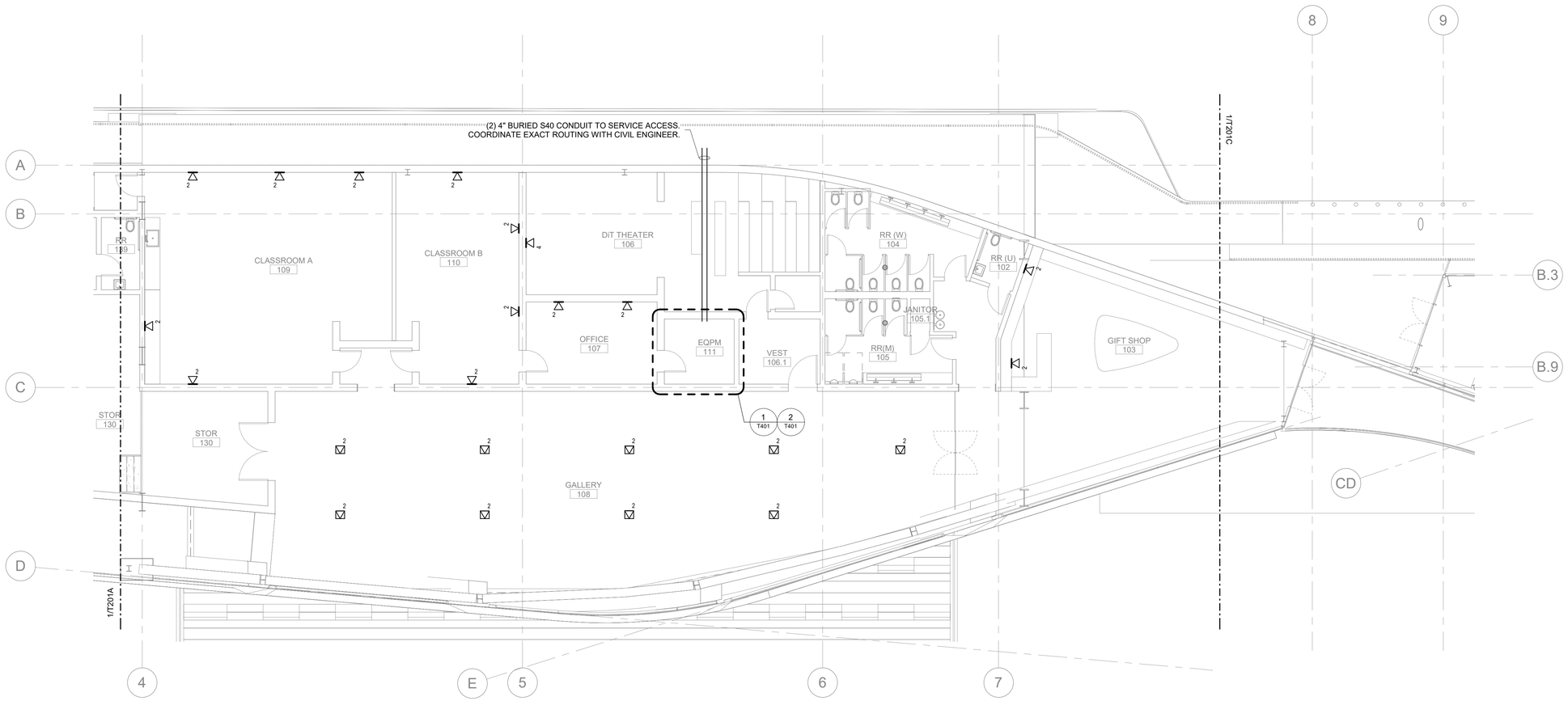

0 4' 8' 16'
SCALE: 1/8" = 1'-0"

N

NOT FOR CONSTRUCTION

09.AUG.2021

belzberg architects
2321 MAIN STREET
SANTA MONICA, CA 90405
310.453.9611
www.belzbergarchitects.com

ARUP
Arup North America Ltd.
900 Wilshire Boulevard,
19th Floor
Los Angeles CA 90017
Tel: 310 578 4400
www.arup.com

#	DESCRIPTION	DATE

HOLOCAUST MUSEUM LA EXPANSION

100 THE GROVE DRIVE
LOS ANGELES, CA 90036

TELECOMMUNICATIONS LEARNING CENTER GROUND FLOOR PLAN - NORTH

PROJECT NUMBER: 17009

T201B

08/09/21 19:14:47

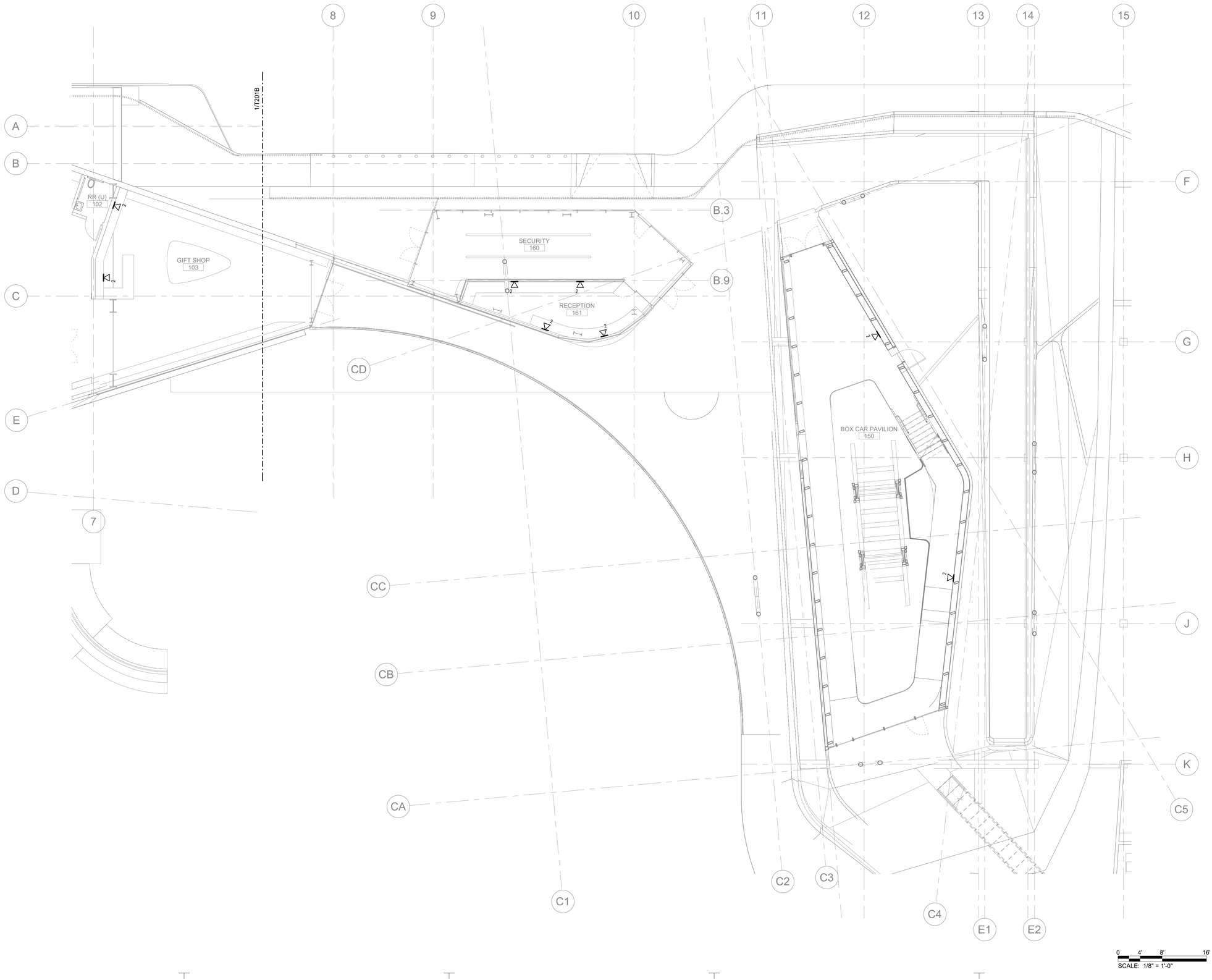

NOT FOR CONSTRUCTION

09.AUG.2021

ba
belzberg architects
2321 MAIN STREET
SANTA MONICA, CA 90405
310.453.9611
www.belzbergarchitects.com

ARUP
Arup North America Ltd.
900 Wilshire Boulevard,
19th Floor
Los Angeles CA 90017
Tel: 310 578 4400
www.arup.com

#	DESCRIPTION	DATE

HOLOCAUST MUSEUM LA EXPANSION

100 THE GROVE DRIVE
LOS ANGELES, CA 90036

TELECOMMUNICATIONS BOXCAR GROUND FLOOR PLAN

PROJECT NUMBER: 17009

T201C

08/09/21 19:14:52

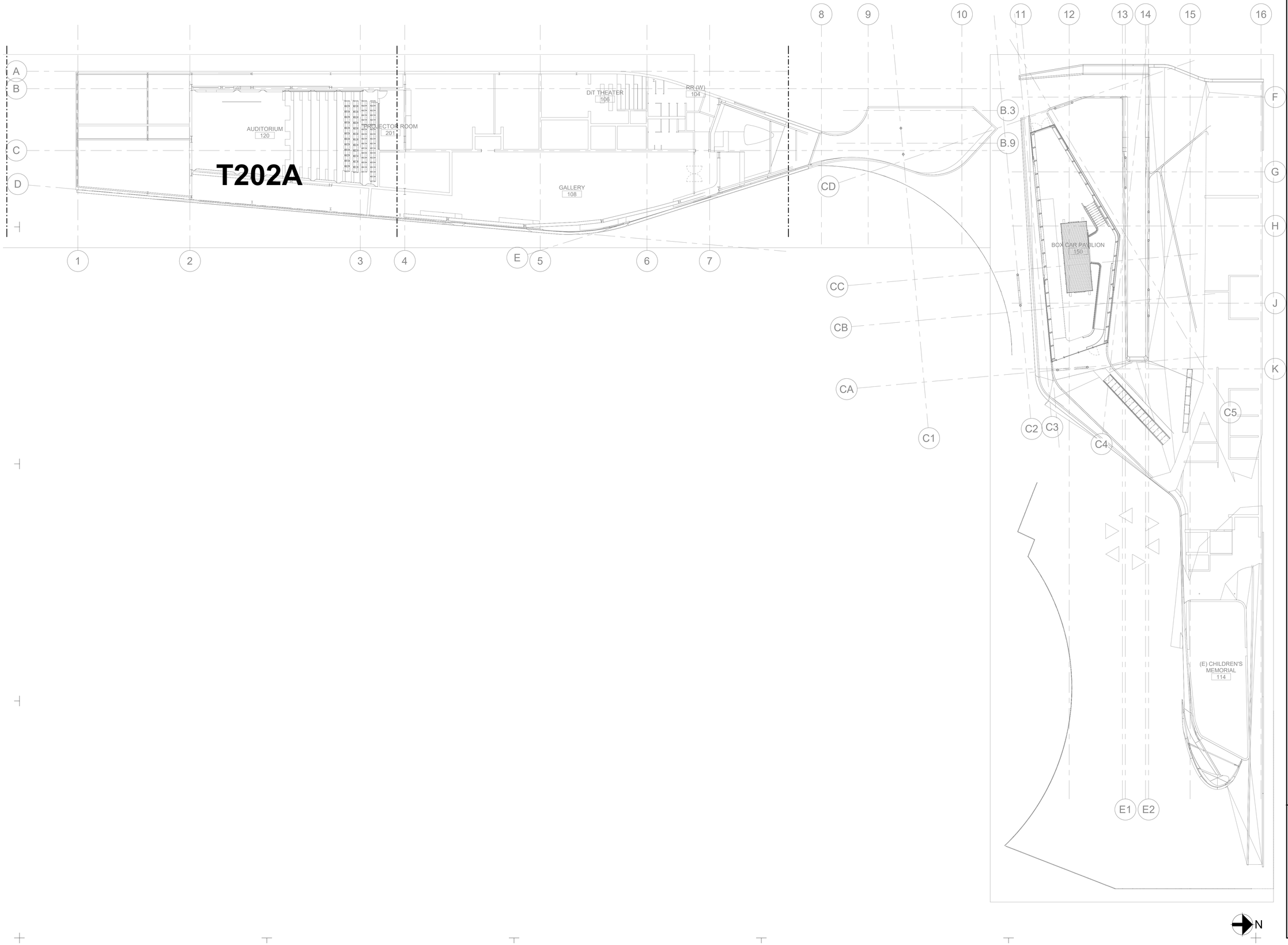

NOT FOR CONSTRUCTION

09.AUG.2021

belzberg architects
2321 MAIN STREET
SANTA MONICA, CA 90405
310.453.9611
www.belzbergarchitects.com

ARUP
Arup North America Ltd.
900 Wilshire Boulevard,
19th Floor
Los Angeles CA 90017
Tel: 310 578 4400
www.arup.com

#	DESCRIPTION	DATE

HOLOCAUST
MUSEUM LA
EXPANSION

100 THE GROVE DRIVE
LOS ANGELES, CA 90036

TELECOMMUNICATIONS
MEZZANINE FLOOR
PLAN - OVERALL

PROJECT NUMBER: 17009

T202

08/09/21 19:14:59

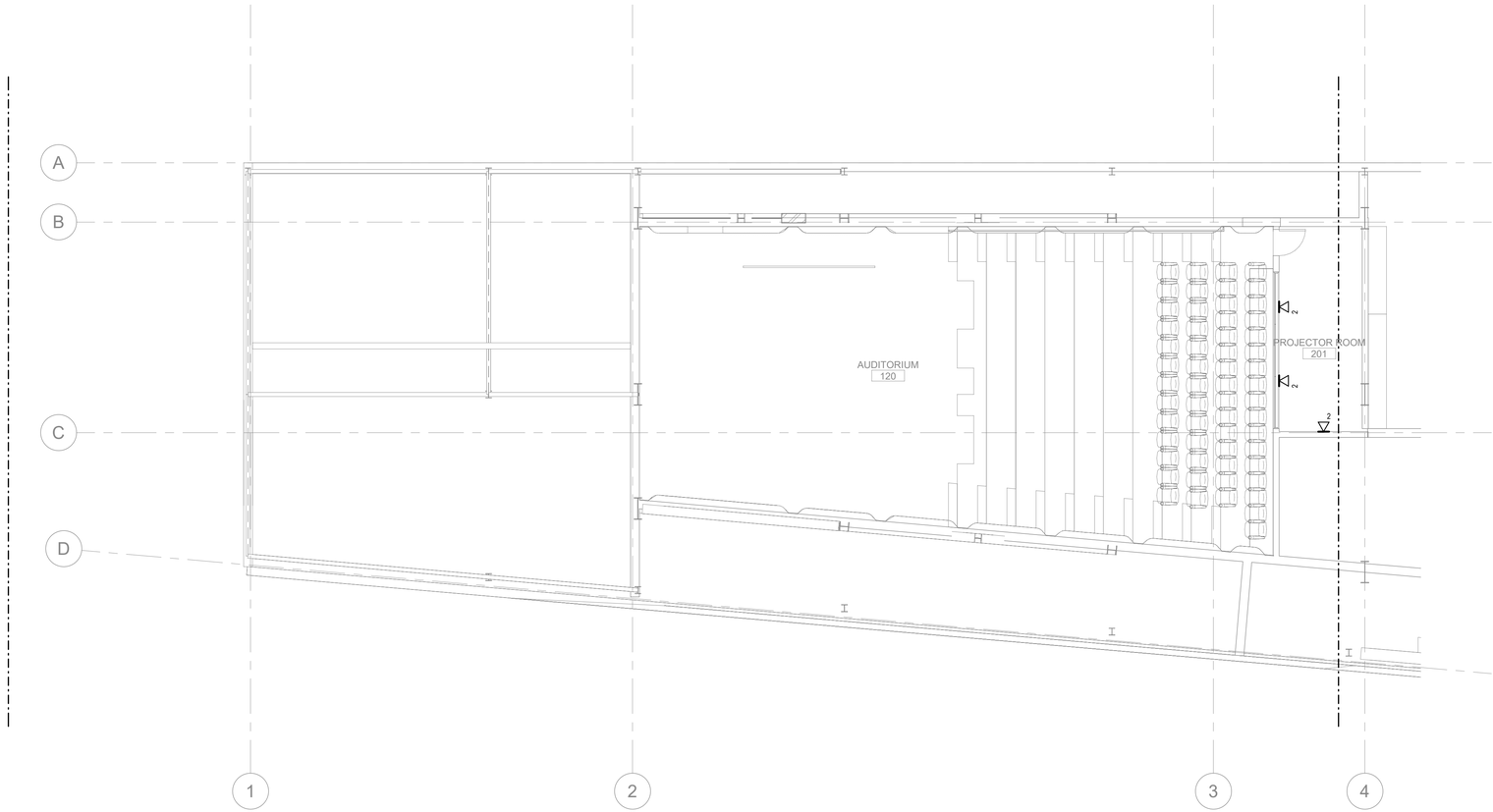

NOT FOR CONSTRUCTION

09.AUG.2021

ba
belzberg architects
2321 MAIN STREET
SANTA MONICA, CA 90405
310.453.9611
www.belzbergarchitects.com

ARUP
Arup North America Ltd.
900 Wilshire Boulevard,
19th Floor
Los Angeles CA 90017
Tel: 310 578 4400
www.arup.com

#	DESCRIPTION	DATE

HOLOCAUST MUSEUM LA EXPANSION

100 THE GROVE DRIVE
LOS ANGELES, CA 90036

TELECOMMUNICATIONS LEARNING CENTER MEZZ FLOOR PLAN - SOUTH

PROJECT NUMBER: 17009

T202A

08/09/21 19:15:03

N

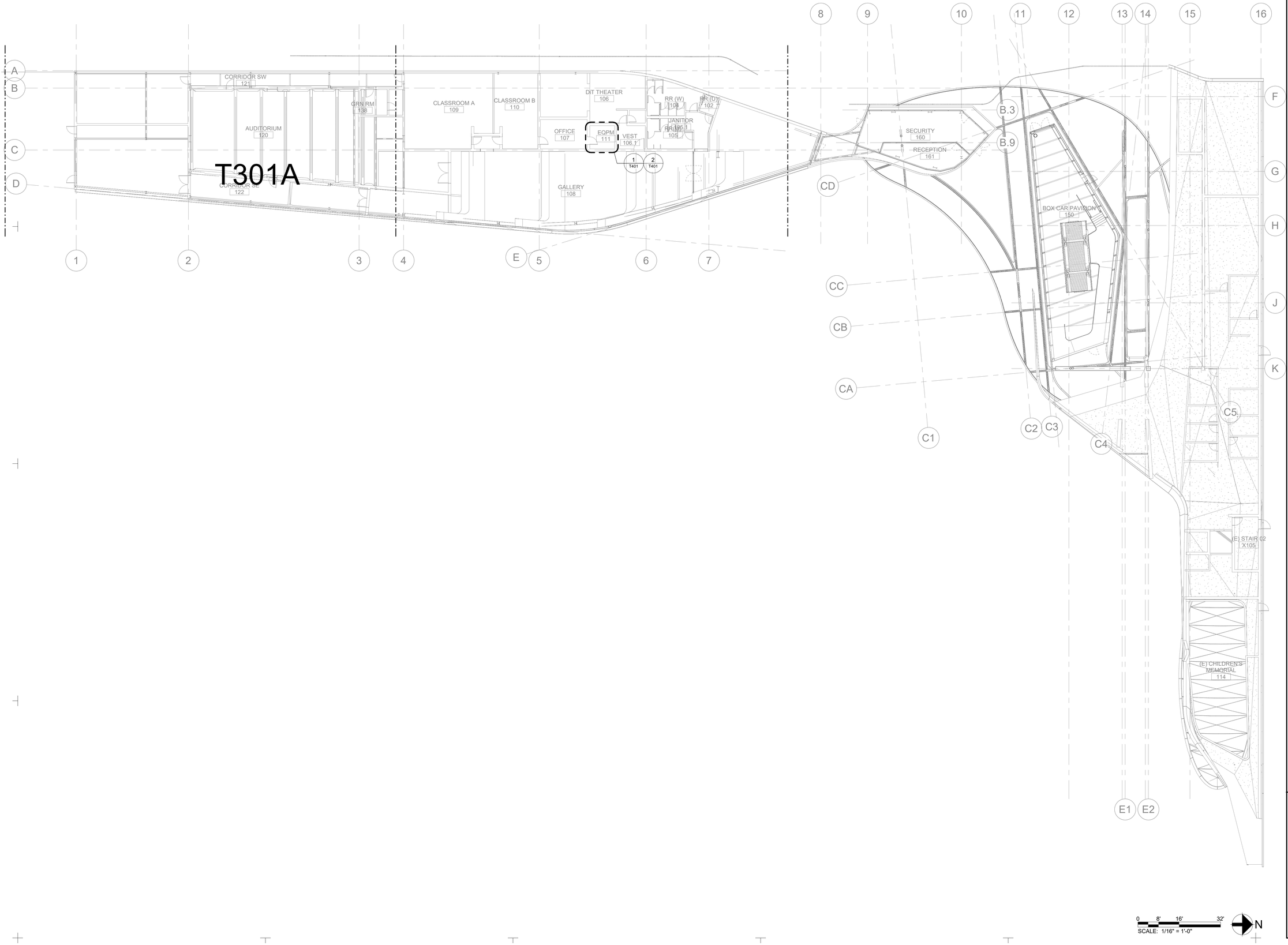

0 8' 16' 32'

SCALE: 1/16" = 1'-0"

N

NOT FOR CONSTRUCTION

09.AUG.2021

ba
belzberg architects
2321 MAIN STREET
SANTA MONICA, CA 90405
310.453.9611
www.belzbergarchitects.com

ARUP
Arup North America Ltd.
900 Wilshire Boulevard,
19th Floor
Los Angeles CA 90017
Tel: 310 578 4400
www.arup.com

#	DESCRIPTION	DATE

HOLOCAUST MUSEUM LA EXPANSION

100 THE GROVE DRIVE
LOS ANGELES, CA 90036

TELECOMMUNICATIONS GROUND FLOOR CEILING PLAN - OVERALL

PROJECT NUMBER: 17009

T301

08/09/21 19:15:10

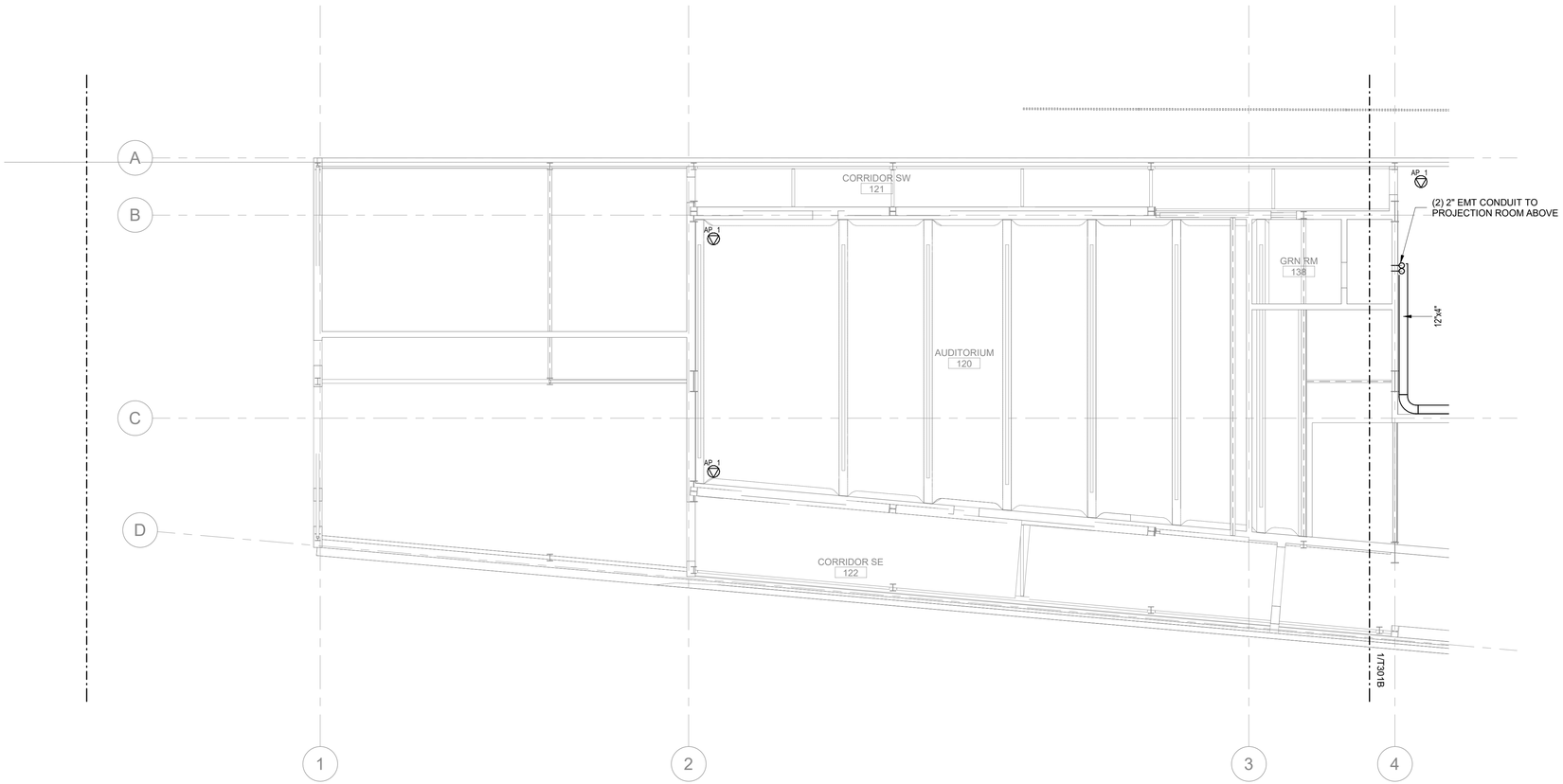

0 4' 8' 16'
SCALE: 1/8" = 1'-0"

N

NOT FOR CONSTRUCTION

09.AUG.2021

belzberg architects
2321 MAIN STREET
SANTA MONICA, CA 90405
310.453.9611

www.belzbergarchitects.com

ARUP

Arup North America Ltd.
900 Wilshire Boulevard,
19th Floor
Los Angeles CA 90017
Tel: 310 578 4400
www.arup.com

#	DESCRIPTION	DATE

HOLOCAUST MUSEUM LA EXPANSION

100 THE GROVE DRIVE
LOS ANGELES, CA 90036

TELECOMMUNICATIONS LEARNING CENTER GROUND FLOOR CEILING PLAN - SOUTH

PROJECT NUMBER: 17009

T301A

08/09/21 19:15:14

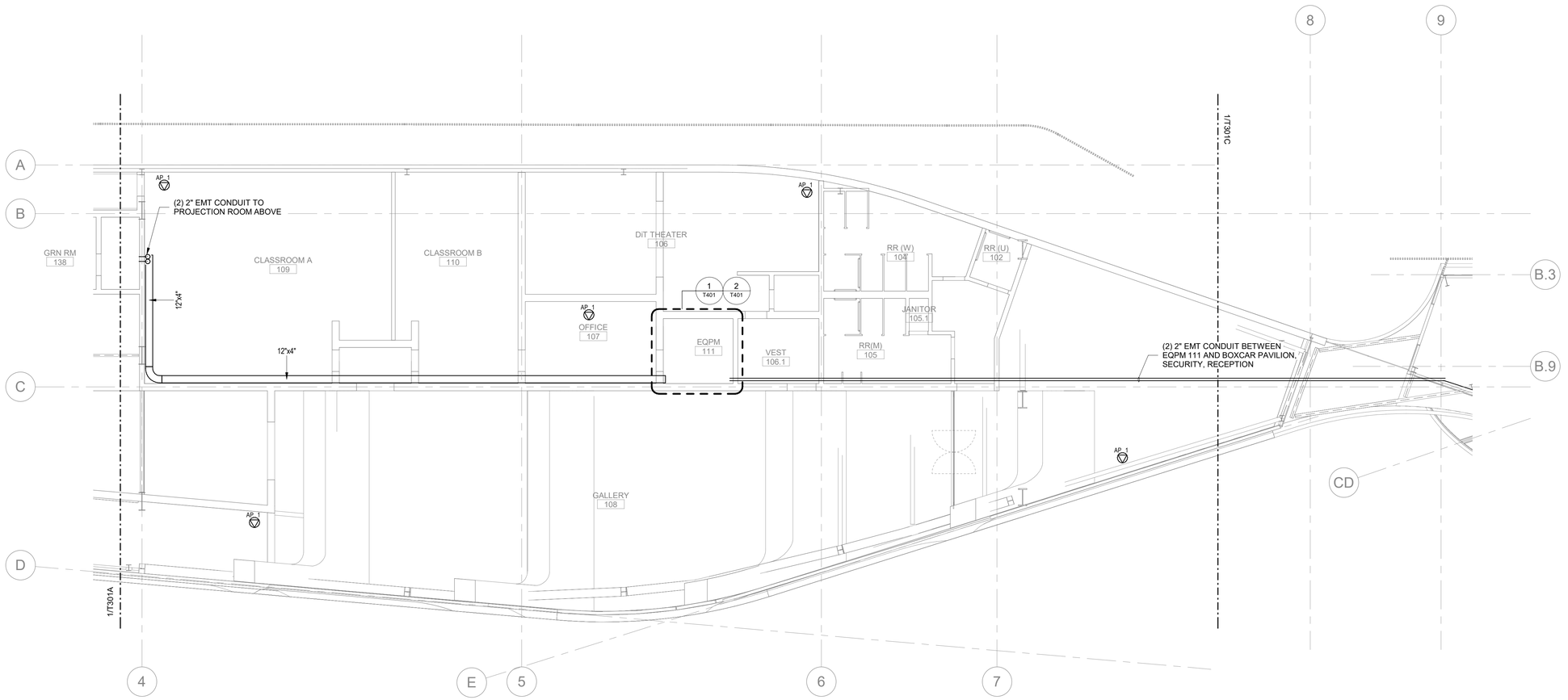

0 4' 8' 16'
SCALE: 1/8" = 1'-0"

N

NOT FOR CONSTRUCTION

09.AUG.2021

belzberg architects
2321 MAIN STREET
SANTA MONICA, CA 90405
310.453.9611
www.belzbergarchitects.com

ARUP
Arup North America Ltd.
900 Wilshire Boulevard,
19th Floor
Los Angeles CA 90017
Tel: 310 578 4400
www.arup.com

#	DESCRIPTION	DATE

HOLOCAUST MUSEUM LA EXPANSION

100 THE GROVE DRIVE
LOS ANGELES, CA 90036

TELECOMMUNICATIONS LEARNING CENTER GROUND FLOOR CEILING PLAN - NORTH

PROJECT NUMBER: 17009

T301B

08/09/21 19:15:19

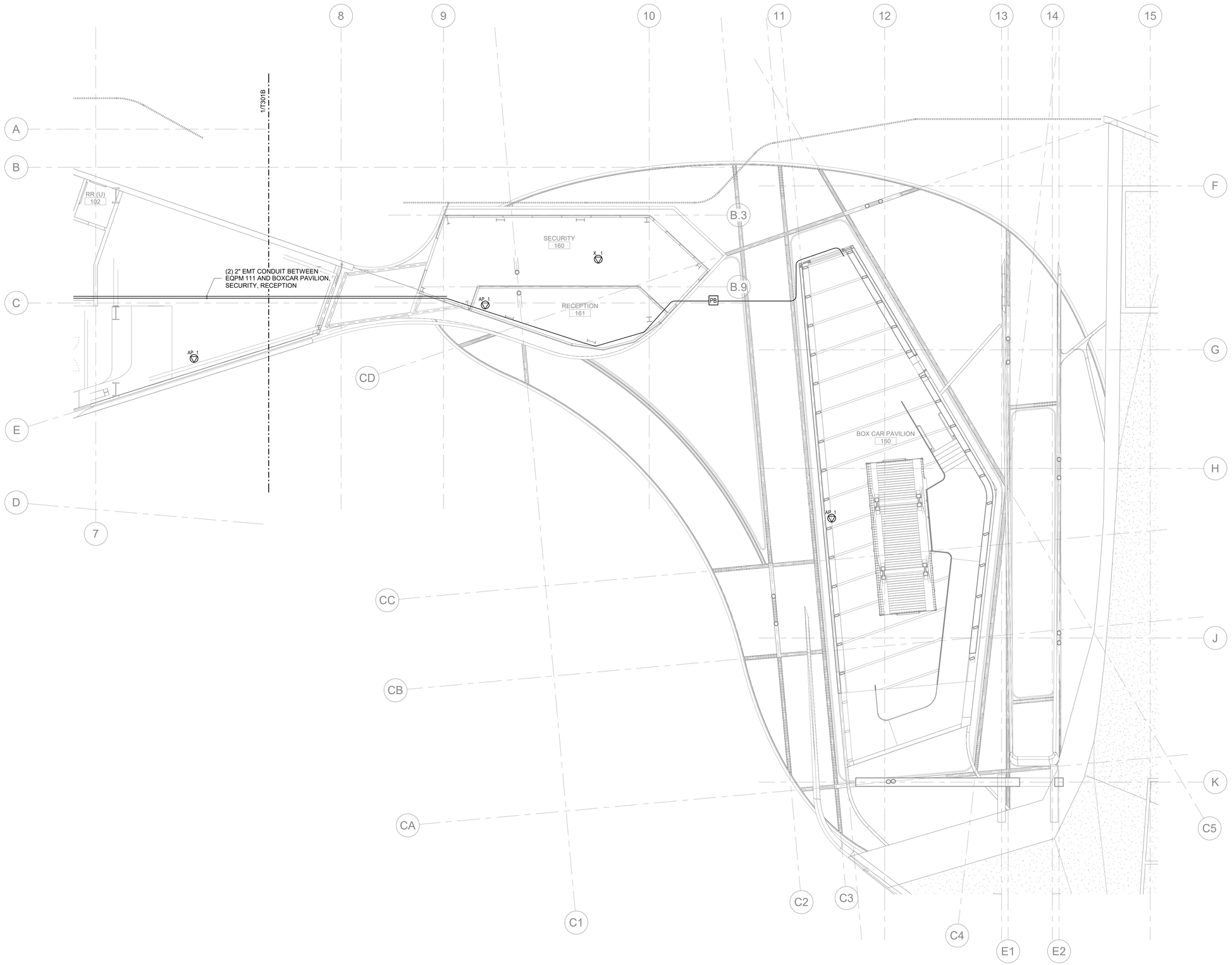

NOT FOR CONSTRUCTION

09.AUG.2021

ba
belzberg architects
2321 MAIN STREET
SANTA MONICA, CA 90405
310.453.9611
www.belzbergarchitects.com

ARUP
Arup North America Ltd.
900 Wilshire Boulevard,
19th Floor
Los Angeles CA 90017
Tel: 310 578 4400
www.arup.com

#	DESCRIPTION	DATE

HOLOCAUST MUSEUM LA EXPANSION

100 THE GROVE DRIVE
LOS ANGELES, CA 90036

TELECOMMUNICATIONS BOXCAR GROUND FLOOR CEILING PLAN

PROJECT NUMBER: 17009

T301C

08/09/21 19:15:24

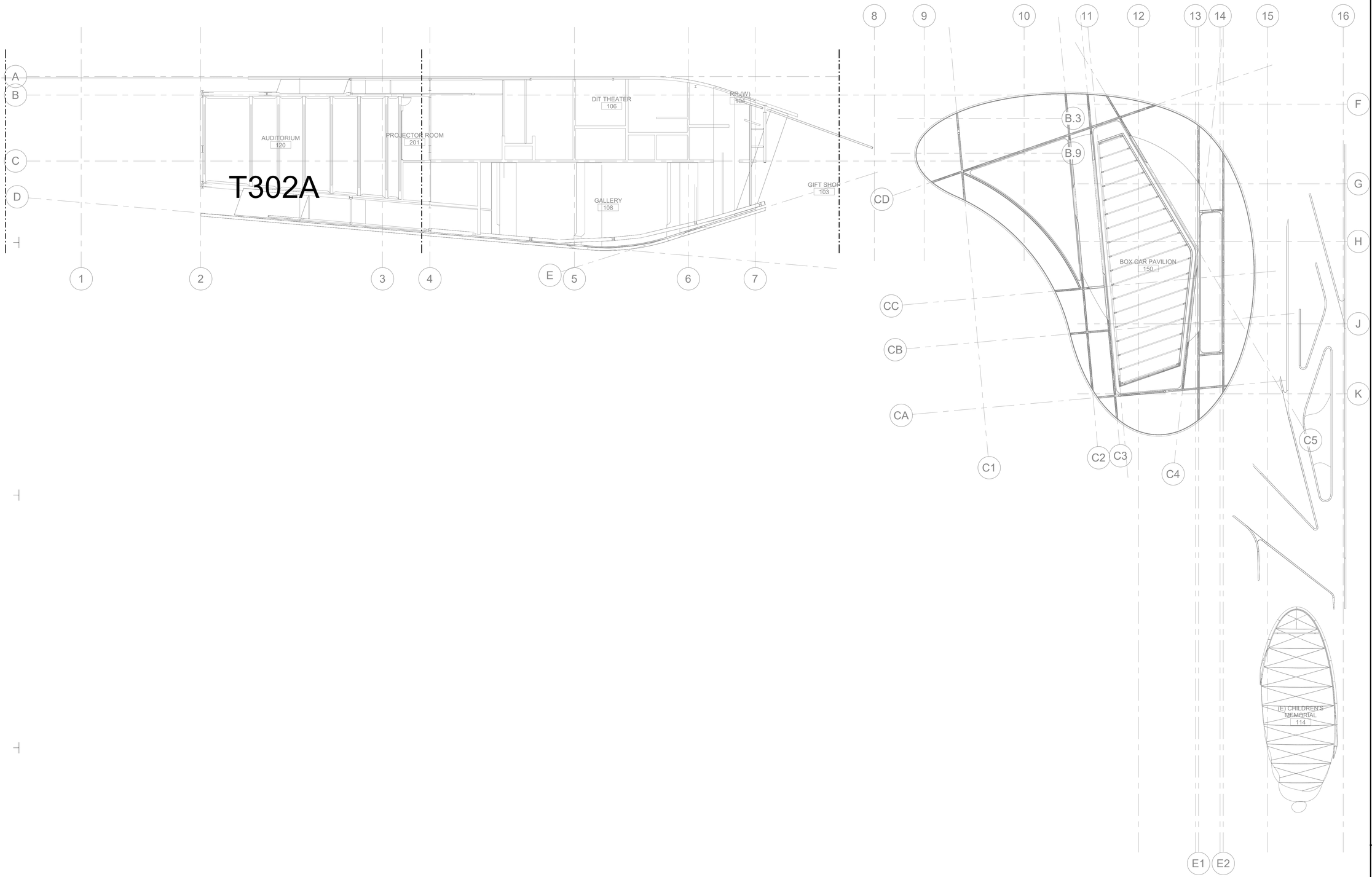

0 8' 16' 32'

SCALE: 1/16" = 1'-0"

N

NOT FOR CONSTRUCTION

09.AUG.2021

ba
belzberg architects
2321 MAIN STREET
SANTA MONICA, CA 90405
310.453.9611
www.belzbergarchitects.com

ARUP
Arup North America Ltd.
900 Wilshire Boulevard,
19th Floor
Los Angeles CA 90017
Tel: 310 578 4400
www.arup.com

#	DESCRIPTION	DATE

HOLOCAUST MUSEUM LA EXPANSION

100 THE GROVE DRIVE
LOS ANGELES, CA 90036

TELECOMMUNICATIONS LEARNING CENTER MEZZ CEILING PLAN - OVERALL

PROJECT NUMBER: 17009

T302

08/09/21 19:15:30

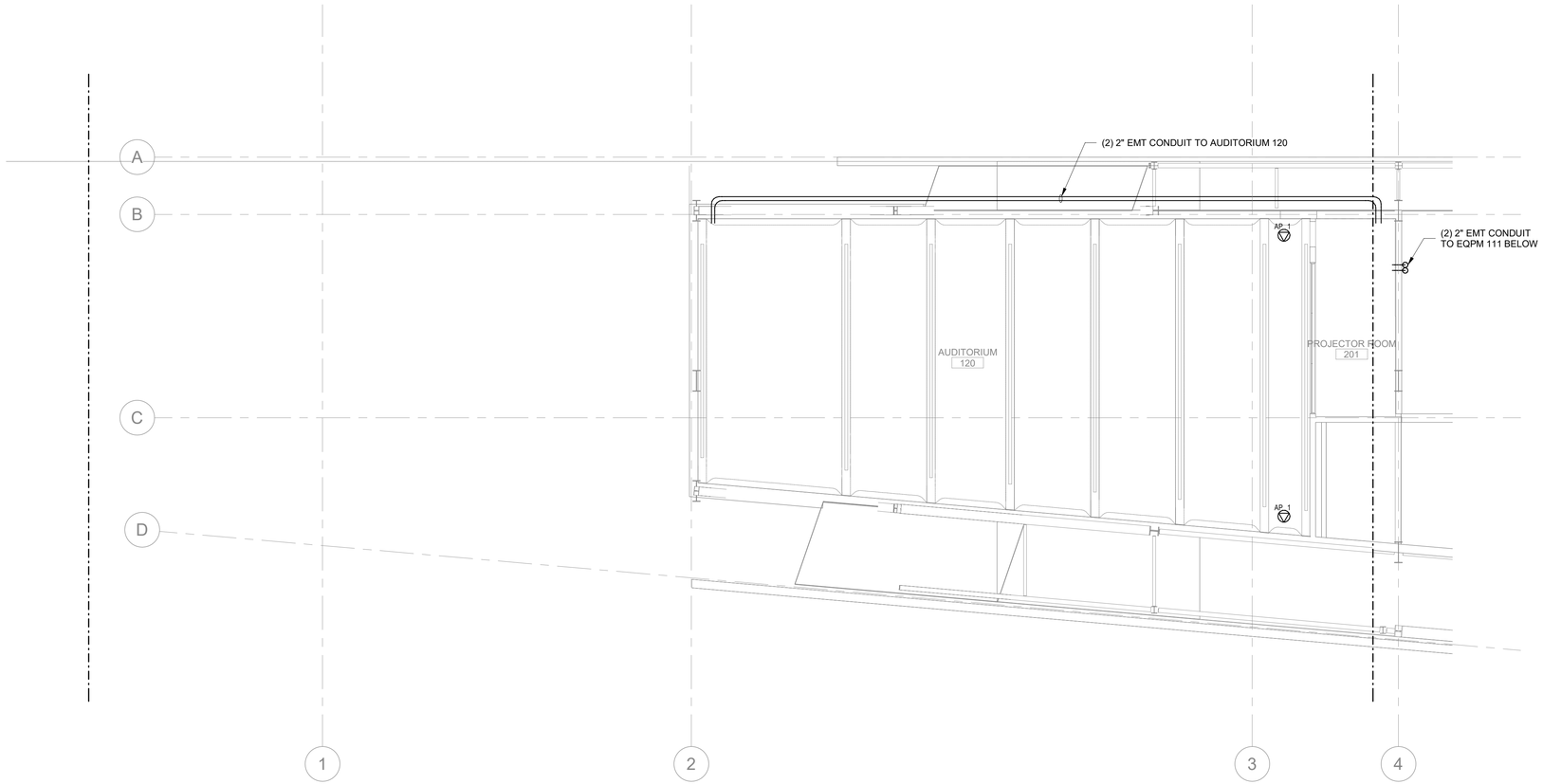

0 4' 8' 16'
SCALE: 1/8" = 1'-0"

N

NOT FOR CONSTRUCTION

09.AUG.2021

belzberg architects
2321 MAIN STREET
SANTA MONICA, CA 90405
310.453.9611
www.belzbergarchitects.com

ARUP
Arup North America Ltd.
900 Wilshire Boulevard,
19th Floor
Los Angeles CA 90017
Tel: 310 578 4400
www.arup.com

#	DESCRIPTION	DATE

HOLOCAUST MUSEUM LA EXPANSION

100 THE GROVE DRIVE
LOS ANGELES, CA 90036

TELECOMMUNICATIONS LEARNING CENTER MEZZ CEILING PLAN - SOUTH

PROJECT NUMBER: 17009

T302A

08/09/21 19:15:34

OUTLET DESIGN SCHEDULE

Outlet Type	System ID	Count	Number of Ports	Cable Counts Category 6A	Mounting Type	Level	To Closet
WIRELESS ACCESS POINT OUTLET	AP	9	9	9	Ceiling Mount	01 GALLERY	EQPM 111
X-RAY/DETECTOR OUTLET	X	1	1	1	Ceiling Mount	01 GALLERY	EQPM 111
STANDARD DATA OUTLET		12	24	24	Floor Mount	01 GALLERY	EQPM 111
STANDARD DATA OUTLET		20	40	40	Wall Mount	01 GALLERY	EQPM 111
EXTERIOR WEATHERPROOF DATA OUTLET	WP	1	2	2	Wall Mount	01 GALLERY	EQPM 111
STANDARD DATA OUTLET		1	4	4	Wall Mount	01 GALLERY	EQPM 111
STANDARD DATA OUTLET		3	6	6	Wall Mount	02 MEZZANINE	EQPM 111
Grand total: 47		47	86	86			

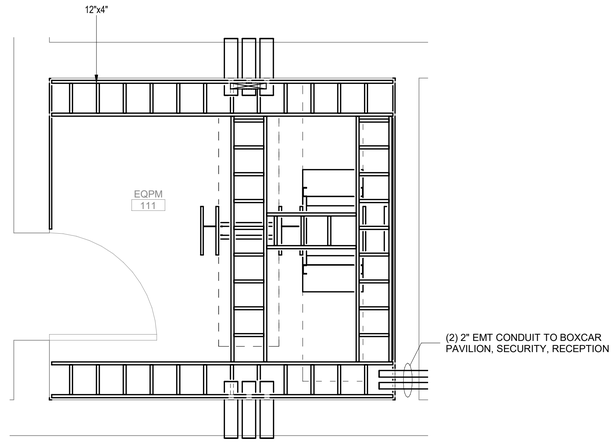

2 EQPM ROOM 111 - ENLARGED OVERHEAD PLAN
1/2" = 1'-0"

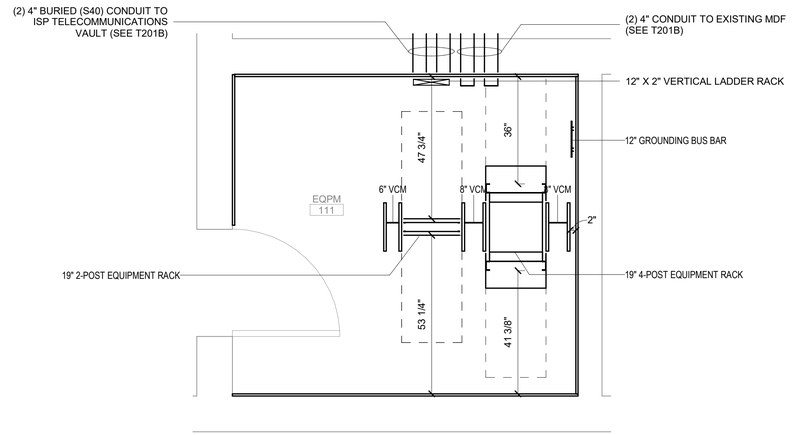

1 EQPM ROOM 111 - ENLARGED PLAN
1/2" = 1'-0"

0 1' 2' 4'
SCALE: 1/2" = 1'-0"

N

NOT FOR CONSTRUCTION

09.AUG.2021

belzberg architects
2321 MAIN STREET
SANTA MONICA, CA 90405
310.453.9611
www.belzbergarchitects.com

ARUP
Arup North America Ltd.
900 Wilshire Boulevard,
19th Floor
Los Angeles CA 90017
Tel: 310 578 4400
www.arup.com

#	DESCRIPTION	DATE

HOLOCAUST MUSEUM LA EXPANSION

100 THE GROVE DRIVE
LOS ANGELES, CA 90036

TELECOMMUNICATIONS ENLARGED TELECOM ROOM PLAN

PROJECT NUMBER: 17009

T401

08/09/21 19:15:37

PAN PACIFIC PARK – GROVE DRIVE RESTROOM BUILDING REHABILITAION
SCOPE OF WORK DESCRIPTION

Nov 16, 2021

General Notes:

Contractor is to install temporary protective chain link fencing surrounding the restroom building. This effort is to be coordinated with Recreation and Parks' Maintenance Supervisor to allow access for staff if needed.

Contractor is responsible for providing temporary restrooms and hand washing facilities for employees. These are to be locked/secured by the contractor's site foreman on a daily basis.

Demolition and removal work shall be performed to avoid damage to nearby existing trees.

All construction debris is to be removed and disposed of in a legal manner at the contractor's expense.

If encountered, inactive or abandoned utilities shall be disconnected, removed, and plugged or capped subject to the local governing ordinances. Verify with Recreation and Parks staff prior to doing so.

Clean up shall take place on a daily basis.

At the Restrooms:

Water closets (in the end stalls), lavatories, and the urinal installed in the restrooms shall comply with Chapter 11B of LA City Building Code (Also refer to the ADA sheet). If challenges are encountered given the existing conditions, the issues shall be brought to Recreation and Parks staff's attention prior to proceeding with work.

Demolish and dispose of all existing stall doors and their hardware, water closets, urinal, lavatories and faucets, grab bars, and all restroom accessories.

Demolish and dispose of the plumbing chase door. Sand, patch and prime the frame and reuse if in good condition. Replace it with a steel frame if the existing is damaged.

Demolish and dispose of all interior and exterior lighting fixtures.

Demolish and dispose of all restroom signs.

Check existing floor drains for proper drainage. Hydro-jet or unclog if necessary.

All interior walls, CMU partitions, and floors are to be sandblasted to remove existing paint and graffiti. Caution is to be exercised when doing so as not to damage any surfaces.

All exterior walls are to be power washed and the trims are to be sanded. Caution is to be exercised when doing so as not to damage any surfaces.

Strip entry gates of paint, sand, and prime.

Patch all interior and exterior walls and trims, partitions, and ceilings prior to applying final finishes.

Prime all walls, trims, and ceilings.

Prime the plumbing chase door.

Paint all walls, trims, ceilings, window grates, and entry gates. Colors to be determined.

Paint the plumbing chase door. Color to be determined.

Install new stall doors and their hardware (doors to be 15” above the finished floor), water closets, urinal, lavatories and faucets, grab bars, and all restroom accessories per the schedule provided. All products are to be installed as specified, or an approved equivalent.

Install new restroom signs per the ADA sheet.

Apply sealant to the concrete floors in the restrooms.

Install a new hollow metal door at the plumbing chase with associated hinges and locking device. This device is to be coordinated with the Recreation and Parks Maintenance Supervisor.

Install new lighting fixtures as per the specifications provided by the Recreation and Parks’ electrical engineer.

At the Staff Room:

Recreation and Parks staff is to remove all furniture and other items from the space and place into storage prior to any work beginning.

Demolish and dispose of the staff room entry door and its associated hardware. Protect the frame in place and reuse it if in good condition. If replacement is necessary, replace with a metal frame in kind.

Demolish and dispose of the flooring in the staff room. Remove all adhesive left behind leaving the floor smooth for new flooring to be applied.

Remove and dispose of any broken hardware on the storage cabinets. Replace any broken or damaged doors or shelves.

Demolish and dispose of the existing windows and their associated hardware.

Demolish and dispose of all interior lighting.

Install a new hollow metal entry door along with new hinges and locking device. Locking device type is to be coordinated with Recreation and Parks staff.

Install new metal windows with clear tempered glass inserts. Locks and latches are to be included. Verify type with Recreation and Parks staff.

Patch, prime, and prepare all interior walls, ceilings, trims, and cabinets for new paint.

Paint the walls, ceilings, trims, and cabinets. Colors to be determined.

Install new (Armstrong or approved equal) VCT flooring per manufacturer's specifications, quarter turn pattern. Color and style to be determined.

Install new light fixtures as per the specifications provided by the Recreation and Parks' electrical engineer.

DESCRIPTION	MANUFACTURER/MODEL	COLOR/FINISH	QANTITY
GRAB BARS 36"	GLEN PRODUCTS GB-B5806.99-36	STIANLESS STEEL	2
GRAB BARS 42"	GLEN PRODUCTS GB-B5806.99-42	STAINLESS STEEL	2
WATER CLOSET	ACORN DURA-WARE 2105-W-1.28-FVH	STAINLESS STEEL	5
(REUSE EXISTING WALL CARRIERS IF IN GOOD CONDITION. INSTALL 5/8" STAINLESS STEEL THREADED RODS ON ALL CARRIERS) (REUSE FLUSH VALVES IF OPERABLE AND IN GOOD CONDITION)			
URINAL	ACORN DURA-WARE 2158-W-1-0.125-FVH	STAINLESS STEEL	1
(REUSE FLUSH VALVES IF OPERABLE AND IN GOOD CONDITION)			
LAVATORY	ACORN DURA-WARE 1953-1-DMS-9-H1-GT	STAINLESS STEEL	2
GRATE DRAIN	CHICAGO 327-XCP	CHROME	2
FAUCET	CHICAGO 333-665PSHABCP	CHROME	2
SEAT PROTECTOR DISPENSER	BOBRICK PH-B221	STAINLESS STEEL	5
TOILET PAPER DISPENSER	GLEN PRODUCTS PH-E200D-SG	GRAY	5
SOAP DISPENSER	BOBRICK SD-B2111	STAINLESS STEEL	2
DIAPER CHANGING STATION	KOALA KB110-SSWM	STAINLESS STEEL/GRAY	2
STALL DOORS	GLEN PRODUCTS SOLID PHENOLIC	WHITE SPECKLE (WS)	5
(ALL NEW HINGES AND HARDWARE TO BE INCLUDED)			
RESTROOM SIGNS	(SEE ADA SHEET FOR DETAILS)		

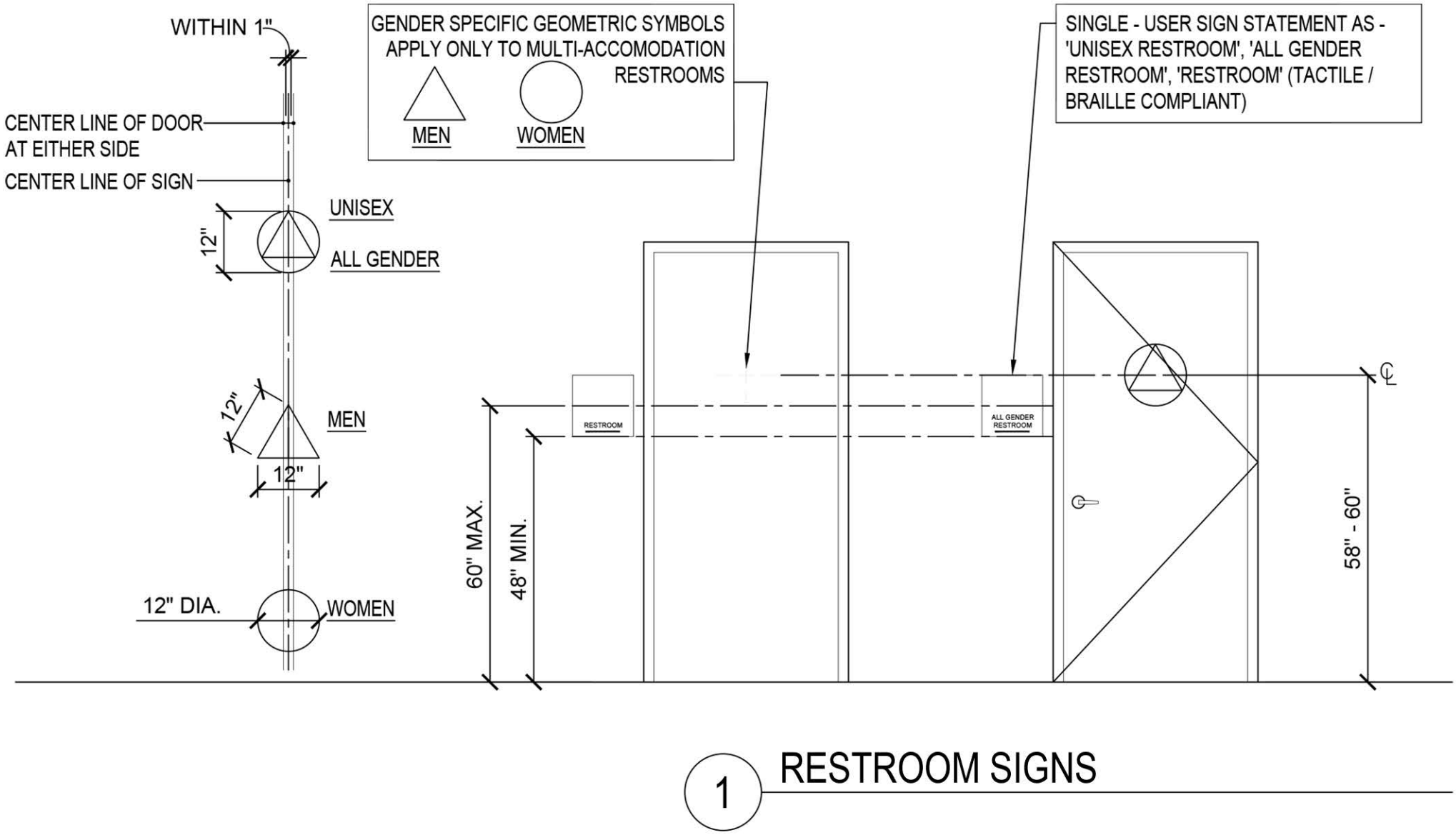

1 RESTROOM SIGNS

ACQUISITION AGREEMENT

V 32088
Ron's Copy

THIS AGREEMENT, made and entered into this 31st day of March, 1978

BY AND AMONG

County of Los Angeles, a body corporate and politic, hereinafter referred to as "COUNTY"

AND

City of Los Angeles, hereinafter referred to as "CITY"

AND

Los Angeles Flood Control District, hereinafter referred to as "DISTRICT"

AND

State of California, acting through the State Public Works Board, hereinafter referred to as "STATE".

WHEREAS, State, City and County desire to establish a park located on the lands which are legally described in Exhibit A attached hereto; and

WHEREAS, County is authorized to acquire lands for, to develop and to operate parks for the State Park System and for the benefit and enjoyment of the public pursuant to Public Resources Code Sections 5150-5152 and 5157 and Government Code Section 25353; City is authorized to acquire lands for the State Park System and to develop and to operate parks for the benefit and enjoyment of the public pursuant to Public Resources Code Sections 5150 through 5152; and

WHEREAS, City and County desire to acquire said land and to have the same developed and operated as a park; and

WHEREAS, State has appropriated $3,000,000 of 1974 State Bond Funds by Chapter 8 Statutes of 1978 toward the acquisition of said land for said park, provided that said park shall become a part of the State Park System and title to said park shall be held by State, subject

to an operating agreement with the County; and

WHEREAS, District and City desire to construct a basin for the control of flood and other surface waters and to construct certain flood control works within a part of the area to be occupied by the park as part of project 9408 of the 1970 Storm Drain Bond Issue; and

WHEREAS, City is authorized to participate in projects for the control of flood, storm and other waste waters and District is authorized to expend funds for the control of flood, storm and other waste waters pursuant to the Los Angeles County Flood Control Act (Chapter 755 Stats, 1915, as amended); and

WHEREAS, State desires to convey to District storm drain and inundation easements for flood control purposes; and

WHEREAS, State, County and City are authorized pursuant to the provisions of Article 1 of Chapter 5 of Division 7 of Title 1 of the Government Code, commencing with Section 6500, to contract with other public agencies for the joint exercise of any power common to the contracting parties and each of said public entities has the respective power to acquire, develop and operate public parks and to contract with each other to do so; and

WHEREAS, City and District are authorized pursuant to the provisions of Article 1 of Chapter 5 of Division 7 of Title 1 of the Government Code, commencing with Section 6500, to contract with other public agencies for the joint exercise of any power common to the contracting parties and each of said public entities has the respective power to acquire, develop and maintain projects for the control of flood and other waste waters and to contract with each other to do so; and

WHEREAS, it is necessary for the parties hereto to fully comply with all applicable federal and state environmental laws.

NOW, THEREFORE, State, County, City and District, each in consideration of these premises and the contributions of each of the others, agrees as follows:

1. County is designated as the lead agency. County shall make an environmental assessment and shall prepare an Environmental Impact Report (EIR) in compliance with the California Environmental Quality Act (CEQA). Said assessment and report shall evaluate the environmental impacts of both the park project and the flood control project. Each of the other agencies which are parties hereto shall review as a responsible agency the EIR that is prepared by County, and if it is satisfactory, approve it.

2. County, as the lead agency, shall be responsible to see that all the requirements of the National Environmental Policy Act (NEPA) are fully satisfied. Each of the other parties hereto shall cooperate and assist with whatever reviews and approvals of County's work which may be required.

3. County, subject to approval of the State Department of General Services, shall employ an independent appraiser to appraise the property constituting the proposed park. Said appraiser shall also appraise the storm drain and inundation easements to be acquired by District. The legal description and area of the proposed park are set forth in Exhibit "A" which is incorporated as a part of this agreement. The legal descriptions, areas and form of the deed which will convey through escrow the proposed storm drain and inundation easements to District are set forth in Exhibit "B" which is incorporated as a part of this agreement. Upon completion

the appraisal sha be submitted to the State Department of General Services for review and approval. The appraisal shall not be accepted unless and until it is approved by the Department of General Services.

4. Except in the event of rescission or abandonment as hereinafter provided, State shall pay the sum of THREE MILLION DOLLARS ($3,000,000) toward the acquisition of said land for park purposes whether the property is acquired by negotiated purchase through escrow or whether it is acquired through the exercise of the power of eminent domain. In no event shall State be obligated to pay for any purpose under this agreement an amount in excess of said $3,000,000. Concurrently with the execution of this agreement the State and County shall execute an operating agreement that will provide for County to develop, operate and maintain the park for a period of fifty (50) years.

If the property is acquired through escrow the fee title to all of the property described in Exhibit "A" shall be taken in the name of the State and State shall, concurrently with the acquisition of title, convey to District the storm drain and inundation easements over the areas and in the form described in Exhibit "B". The Department of General Services is hereby authorized to execute all documents necessary to effect said passage of title through escrow. The acquisition price shall be subject to the approval of the Department of General Services. State, County, City and District shall deposit the entire amount of their shares of the acquisition costs into said escrow no later than twenty-four (24) hours before close of escrow. The terms of this agreement shall constitute the basic escrow instructions provided that supplemental instructions not inconsistent herewith may be executed to effect the purposes of this agreement.

5. District shall pay 100% of the approved appraised value of said storm drain and inundation easements up to a maximum of THREE MILLION DOLLARS ($3,000,000). In the event that the total area required for the park and the flood control projects is acquired for less than the approved appraised value, set forth in the said approved appraisal then the reduction in cost will be prorated between District on one side and City and County on the other in the same ratio as the value of the storm drain and inundation easements is to the value of the total area appraised.

6. City shall allocate a sufficient part of its total cash contribution to pay for any and all of the cost of the District's storm drain and inundation easements which exceeds THREE MILLION DOLLARS ($3,000,000), if any.

7. City shall pay the sum of TWO MILLION SIX HUNDRED THOUSAND DOLLARS ($2,600,000) toward the acquisition of said land, including its obligation under Paragraph 6. City is not obligated to pay in excess of that amount unless its City Council authorizes such additional payment.

8. County shall pay the sum of TWO MILLION SIX HUNDRED THOUSAND DOLLARS ($2,600,000) toward the acquisition of said park. In the event that the total acquisition costs exceed the contributions fixed for State, District, City and County in Paragraphs 4, 5, 7 and 8, and City does not agree to share equally with County in paying the amount in excess of said contributions then County, in the sole discretion of its Board of Supervisors, may elect to pay the entire amount in excess of said contributions or it may elect to rescind any or all agreements made or actions taken for the purpose of acquiring said land. Should such a rescission occur City shall share equally with County in paying all costs incurred by County pursuant to Paragraphs 12, 13 and 14 accrued as of

the date of rescission. In such event the State shall have no liability under Paragraph 4 or otherwise.

9. Should it become necessary to exercise the power of eminent domain to acquire the property the parties hereto shall proceed as follows:

State and District shall jointly file an action in eminent domain to acquire the fee simple title to the property described in Exhibit "A" in the name of State and to acquire in the name of District the easements described in Exhibit "A". This action shall be filed jointly if the State Public Works Board and the Board of Supervisors of District each deem such action necessary and each adopts a resolution of necessity pursuant to law to authorize such action. Each resolution shall instruct the Los Angeles County Counsel as attorney for District to file said action and to conduct all matters pertaining thereto on behalf of both plaintiffs. No stipulation for judgment in such action shall be made without the prior approval of the State Public Works Board, District's Board of Supervisors and County's Board of Supervisors. Should County exercise its discretion to rescind pursuant to Paragraph 8 a motion for abandonment of said eminent domain action shall be filed.

State, County, City and District shall each pay its respective share of the acquisition costs no later than fifteen (15) days following the entry of an interlocutory judgment or no later than thirty (30) days following written notice from said County Counsel that said payment is required in order to comply with Code of Civil Procedure Sections 1263.110 et. seq. or 1255.010 et. seq. if possession of the property is needed for construction of improvements or to establish the date of valuation.

10. After payment of its share of the acquisition costs, City may join with County in sharing development costs, provided that the City Council gives its approval. In the event that City does join in the park development then City shall deposit its share of development money with County after bids have been received and opened but prior to award of a contract by County for the construction of any phase of park development. When the contract work is accepted, an adjustment will be made to reflect the final cost after all supplemental changes and change orders have been completed.

11. County shall have responsibility for the conduct of negotiations with the owners of any and all interests in said land until eminent domain proceedings become necessary. Any settlement negotiated by County will be submitted to City for review. Such review shall not reduce City's obligation under Paragraph 7 nor shall it restrict the County's authority to proceed under Paragraph 8. County shall have responsibility for the design of the park as provided in said operating agreement. County shall work cooperatively with City in all phases of park design.

12. Subject to the provisions of Paragraphs 7 and 8, County and City shall share equally all costs of acquisition over and above the contributions of State and District. The costs of acquisition shall include but shall not be limited to the following:

    a. The price of all real property purchased by deed and agreement through escrow or acquired through eminent domain pursuant to this agreement, including the total court judgment, including such attorneys fees, expert witness fees, pre-condemnation damages and interest as may be awarded by a court of competent jurisdiction, together with all incidental charges including but not limited to escrow fees, recording fees,

filing fees, court costs, title reports, surveys, test borings, site selection surveys, preparation of legal descriptions, relocation assistance, policies of title insurance, soils analysis and charges necessary to clear easements and relocate utilities required for development of the site.

b. The sums paid for independent appraisals and in house review of appraisal data.

c. All charges for environmental impact reports and studies including the collection of data, coordinating and reviewing the Draft EIR, conducting public hearings and check out all public input necessary to comply with CEQA and NEPA.

d. All cost of demolition and site clearance.

The cost to County of performing the work set forth in Paragraphs 1, 2, 3 and 12a, 12b, 12c and 12d above whether paid in cash or performed by staff shall be credited as a part of County's contribution.

13. County and City shall share equally in paying all costs of abandonment of any eminent domain action filed to acquire the site if an abandonment is effected pursuant to a demand by either County or City and all costs and damages which may be incurred due to a rescission, pursuant to Paragraph 8, by County of any agreements made or actions taken to acquire said land. State shall have no liability whatsoever for any cost incurred in connection with any abandonment or rescission. Such demand may only be predicated upon a finding by either City or County that the jury verdict or court award exceeds unreasonably the contributions of City and County required by Paragraphs 7 and 8 and is subject to County's right to proceed as set out in Paragraph 8.

14. For the purpose of apportioning costs in the event of a rescission pursuant to paragraph 8 costs incurred in the design of the park, including landscaping and recreational uses on the portion of the park which is subject to District's said easements shall include the following:

a. All charges for developing design concepts, working with consultants, establishing and developing public participation in planning, and coordinating with public agencies

b. Architectural services including landscape design, Engineering services including design of foundations, preparation of project program plan, schematics, preliminaries and working drawings, all costs of and charges for soils engineering and special consultants.

The cost to County of performing the work set forth in this Paragraph whether paid in cash or performed by staff shall be credited as a part of County's contribution.

15. County's contribution as set forth in Paragraphs 12 and 14 shall include both direct costs and indirect costs. Direct costs are defined as those charges for specific services and acquisitions. Indirect costs include supervision and overhead applied as a percentage of direct labor costs. The supervision and overhead factor will be approximately 30% of direct costs, however, the actual factor varies somewhat from year to year. City shall have the right to audit and review all County books pertaining to this park project during normal hours of business.

16. Except as otherwise expressly limited by this agreement or by the operating agreement, County shall have responsibility for acquisition, design and development of the park. However, County shall take no action nor enter into any contract which will incur any liability for City in excess of the amount set forth in

Paragraph 7. No action by County will have any legally binding effect on City in excess of that amount at any stage of acquisition, design, development, maintenance, repair or restoration of the park or any part thereof without the prior approval of City Council. However, City may later join in such action by County with the prior approval of City Council. The failure of City Council to give such approval will not limit the County's capacity to proceed at its own expense in all said functions. Any action involving the area subject to District's storm drain and inundation easements shall require prior approval of District's Chief Engineer. All design and construction work for park development shall comply with the building and safety ordinances of the County during the period the operating agreement remains in effect. All acquisition, design, construction of park developments shall conform to County regulations and shall be conducted pursuant to County management and control, except as otherwise expressly provided in this agreement.

17. After the land for the park has been acquired, City may participate in paying for park development. All capital outlays for such development shall be subject to the approval of the Board of Supervisors for County and by the City Council for City. The failure of City to approve any such capital outlay shall not limit the County's capacity to proceed on its own without City approval. A "capital outlay" shall be defined as any park development, including all equipment necessary for the initial outfitting of the park, of a permanent nature which costs more than TWO THOUSAND DOLLARS ($2000.00) to purchase or construct.

18. District shall, in addition to the sum set forth in Paragraph 5 above, be responsible for and bear the entire cost of design and construction of the flood control project. District shall work cooperatively with County and City in the design of the

proposed flood retention basin, storm drains and appurtenant structures so that the District design, construction and use shall be consistent with the park use of the area subject however, to the necessity for District to utilize its easements to meet the flood control purposes of the District's Project. County shall work cooperatively with District in the development of the design and the grading plan for the proposed park and shall incorporate in these plans the utilization of at least 175,000 cubic yards of suitable material excavated during construction of the flood retention basin. County with the written consent of the State Department of Parks and Recreation shall have authority to issue revocable permits without charge to District for construction and for inundation of areas outside of District's easement areas, if the resulting design will increase the aesthetics of the park and facilitate use of District's easement areas for park uses.

19. District shall be responsible for the operation and maintenance of its flood control and retention basin operating structures, storm drains and appurtenant structures and shall bear all costs of said activities, provided, however, that the responsibility for and the cost of replacing any park landscaping, equipment or other park improvements damaged by inundation of the easement or permit area pursuant to the District's rights under said easements and permits shall not be borne by District. District shall have the right from time to time to modify or reconstruct the flood control and retention basin operating structures as necessary or desirable to assure the safe operation of the facility. Cost of said modifications and the restoration of park improvements caused by them shall be borne by the District. Said modifications shall be subject to prior review by County and by the State Department of Parks and Recreation.

20. All gifts and donations received from private sources must be acceptable to both County and City. Gifts of money shall be applied to reduce the total cost of acquisition or development.

21. Except as otherwise provided by the operating agreement, all policies pertaining to the operation and maintenance of the park including but not limited to staffing, program content, hours the park will be open and activities which may be prohibited in the park shall be established by County. The Chief Engineer of District and the General Manager of City's Department of Recreation and Parks shall have the opportunity for review and comment. During times when that portion of the site subject to District's easements and permits is actually inundated or such inundation is imminent, District's Chief Engineer shall have authority to promulgate and enforce such rules and procedures and to order and direct such activities as may be reasonably necessary for public safety and efficiency of District's functions in controlling flood, storm and other waste waters.

22. City hereby designates the General Manager of its Recreation and Parks Department as its principal agent. County hereby designates the Director of its Parks and Recreation Department as its principal agent. District hereby designates its Chief Engineer as its principal agent. The General Manager, the Director and the Chief Engineer shall be responsible for coordinating the activities of City, County and District.

23. A Citizens Advisory Committee will be formed to give advice on the park development. City shall appoint 5 members, County shall appoint 5 members and State shall appoint 5 members. The members of the Committee shall be appointed within 90 days from the date this agreement is executed and their terms shall expire two years thereafter.

24. County shall defend, save, keep and hold harmless District, its officers, agents and employees, from all damages, costs or other expenses in law or equity that may at any time arise or be claimed to have arisen because of damages to property or of personal injury, including personal injury resulting in death, received by reason of or in connection with use of the park site, including that portion of the site subject to District's storm drain and inundation easements, for park or recreation purposes and for any use not directly associated with active flood, storm and waste water control functions.

25. District shall defend, save, keep and hold harmless County and City, their officers, agents and employees, from all damages, costs, or other expenses in law or equity that may at any time arise or be claimed to have arisen because of damages to property or of personal injury, including personal injury resulting in death, received by reason of or in connection with actual use of the portion of site subject to District's easement or permits for inundation or other flood storm or waste water control purposes. District shall hold the State harmless from any liability which may arise from the construction and operation of a flood control facility within this park.

26. County shall indemnify and hold harmless City from all damages, costs, claims and expenses that may arise or be claimed to have arisen because of damages to property or personal injury proximately resulting from County's operation or maintenance of the park.

27. In contemplation of the provisions of Section 895.2 of the Government Code imposing certain tort liability jointly upon public entities solely by reason of such entities being parties to an agreement, the parties hereto shall each assume the full

liability imposed upon it, or any of its officers, agents, or employees, by law for injury caused by a negligent or wrongful act or omission occurring in the performance of this agreement. To achieve the above stated purpose, each party indemnifies and holds harmless the other parties for any loss, cost or expense arising out of its own acts or omissions, except that the State shall have no tort liability whatsoever by reason of its being a party to this agreement.

28. All parties agree that no discriminatory practices on the basis of race, sex, age, religion, national origin or ancestry shall be employed in the performance of this agreement.

29. The park is located entirely within the city limits of the City of Los Angeles. During the period the operating agreement remains in effect the park area is thus subject to all ordinances of the City except as provided in Paragraph 16. The Los Angeles Police Department will be responsible for police protection and law enforcement. The Los Angeles City Fire Department will be responsible for fire protection and suppression.

30. This document, the exhibits attached hereto and the operating agreement of even date constitute the entire agreement between State, County, City and District and may be modified only by further written agreement among the parties hereto. Any such modification shall not be effective unless and until approved by the Board of Supervisors of County, The City Council of City, the Board of Supervisors of District and the Department of Parks and Recreation of State as to the operating agreement and the State Public Works Board as to this agreement.

31. Notices or other communications which may be required or provided for pursuant to this agreement shall be given as follows:

TO COUNTY
Director of Parks and Recreation
155 West Washington Boulevard
Los Angeles, California 90015

TO CITY
General Manager
Recreation and Parks Department
1300 City Hall East
Los Angeles, California 90012

14. Said real property shall be named and classified as a unit of the State Park System by the State Park and Recreation Commission. County shall supply to STATE after said property is acquired in a form acceptable to STATE: (1) an inventory of the real property's scenic, natural and cultural features including but not limited to ecological, archeological, historical and geological features; and (2) a draft Resource Management Plan and draft General Development Plan all as required by Section 5002.1 and 5002.2 of the Public Resources Code.

15. The attached Standard Form 3, is incorporated herein as Exhibit "C", and the reference therein to contractor shall mean COUNTY.

IN WITNESS WHEREOF, the parties have executed this instrument upon the date first hereinabove appearing.

STATE OF CALIFORNIA)
) ss.
County of Los Angeles)

I, JAMES S. MIZE, Executive Officer-Clerk of the Board of Supervisors of the County of Los Angeles, do hereby certify that the attached Agreement No. 33037 by and between the Los Angeles County Flood Control District and the State Department of Parks and Recreation and the County of Los Angeles was approved by Board Order No. 107 of the Board of Supervisors of the Los Angeles County Flood Control District at its meeting of March 21, 1978 at which time the Chairman was instructed to sign said Agreement.

STATE OF CALIFORNIA
County of Los Angeles } ss

On the 23rd day of March A.D. 19 78 before me JAMES S. MIZE, Executive Officer — Clerk of the Board of Supervisors of the County of Los Angeles, State of California, residing therein, duly commissioned and sworn, personally appeared

_____, known to me to be the Chairman of the Board of Supervisors of the County of Los Angeles and the person who executed the within instrument on behalf of the County therein named, and acknowledged to me that such County executed the same.

IN WITNESS WHEREOF I have hereunto set my hand and affixed my official seal the day and year in this certificate first above written.

JAMES S. MIZE, Executive Officer — Clerk of the Board of Supervisors

By Darlene Duclon
Deputy

BSD 22

Date Recorded APR 1 6 1982

Instrument No.
82-397877
Official Records

RECORDING REQUESTED BY AND MAIL TO:
Board of Supervisors
County of Los Angeles
500 West Temple Street
Los Angeles, CA 90012

82- 397877

470-9408
WEST HOLLYWOOD 8A
Includes Parcel No. 8B
C.I. 22
470-9408-RW 2
Third District

EASEMENT DEED

For a valuable consideration, receipt of which is hereby acknowledged, STATE OF CALIFORNIA, acting by and through the Department of General Services with the approval of the Department of Parks and Recreation, and pursuant to Government Code Section 14666, does hereby grant to LOS ANGELES COUNTY FLOOD CONTROL DISTRICT, a body corporate and politic, hereinafter referred to as "District", easements for the purposes hereinafter stated in, on, over, and across the real property in the City of Los Angeles, County of Los Angeles, State of California, described as follows:

Parcel No. 8A: Easement for inundation purposes and for retention basin, control facilities, and appurtenant structures in, on, over, and across the real property described as follows:

That portion of Rancho La Brea, as shown on map recorded in Book 1, pages 289 and 290, of Patents, in the office of the Registrar-Recorder of the County of Los Angeles, within the following-described boundaries:

Beginning at the intersection of the northerly line of Third Street, 60 feet wide, as shown on map of Tract No. 7372, filed in Book 107, pages 81, 82, and 83, of Maps, in the office of said Registrar-Recorder, with the southerly prolongation of the westerly line of said Tract No. 7372; thence westerly along said northerly line, and the westerly prolongation thereof, 776.79 feet to a line parallel with and 30 feet easterly, measured at right angles, from the southerly prolongation of the westerly line of the easterly 27.50 feet of Stanley Avenue, 55 feet wide, as shown on map of Tract No. 5177, filed in Book 109, pages 36 and 37, of said Maps; thence along said parallel line N. 0° 00' 37" W. 1,385.91 feet; thence N. 89° 59' 23" E. 5.00 feet to a line parallel with and

CONFORMED FROM ORIGINAL
BY M° Cord 4-9, 1982

Posted by LH 4/27/82 ON MAP
Posted by LH 4/27/82 ON MICROFILMS
DOCUMENT PREPARED BY Engineering Section CHECKED BY
DOCUMENT PREPARED BY WDM CHECKED BY
Description by A.M. Chk. by Reviewed by 11-4-80
Typed by Grace 4/9/80 Compared by ET 4/27/82 11-20-80

35 feet easterly, measured at right angles, from said southerly prolongation of said westerly line of said easterly 27.50 feet of said Stanley Avenue; thence along said last parallel line, N. 0° 00' 37" W. 45.00 feet; thence N. 89° 59' 23" E. 330.00 feet; thence S. 18° 24' 14" E. 541.76 feet to the westerly line of the land described as "PARCEL 1" in a Final Order of Condemnation, had in Superior Court Case No. 555,722, a certified copy of which is recorded in Book 41056, page 388, of Official Records, in the office of said Registrar-Recorder; thence southerly and easterly along said westerly and the southerly lines of said "PARCEL 1" to said westerly line of Tract No. 7372; thence southerly along last-said westerly line, and the southerly prolongation thereof, to the place of beginning.

The area of the above-described parcel of land is 18.18 acres, more or less.

Parcel No. 8B: Easement for covered storm drain and appurtenant structures in, on, over, and across the real property described as follows:

That portion of Rancho La Brea, as shown on map recorded in Book 1, pages 289 and 290, of Patents, in the office of the Registrar-Recorder of the County of Los Angeles within the following-described boundaries:

Commencing at the intersection of the northerly line of Third Street, 60 feet wide, as shown on map of Tract No. 7372, filed in Book 107, pages 81, 82, and 83, of Maps, in the office of said Registrar-Recorder, with the southerly prolongation of the westerly line of said Tract No. 7372; thence westerly along said northerly line, and the westerly prolongation thereof, 776.79 feet to a point, said point being in a line parallel with and 30 feet easterly, measured at right angles, from the southerly prolongation of the westerly line of the easterly 27.50 feet of Stanley Avenue, 55 feet wide, as shown on map of Tract No. 5177, filed in Book 109, pages 36 and 37, of said Maps, said point also being the true point of beginning; thence along said parallel line N. 0° 00' 37" W. 1,385.91 feet; thence N. 89° 59' 23" E. 5.00 feet; thence N. 0° 00' 37" W. 64.11 feet to the southerly line of the land described in deed to United States Postal Service, recorded in Book D6680, page 270, of Official Records, in the office of said Registrar-Recorder; thence westerly along said southerly line 35.00 feet to last-said southerly prolongation; thence southerly along last-said southerly prolongation to said westerly prolongation; thence easterly along said westerly prolongation to said true point of beginning.

The area of the above-described parcel of land is 43,741 square feet, more or less.

Together with the further right to enter upon and to pass and repass over and along said easements and to deposit tools, implements, and

other materials thereon by said District, its officers, agents, and employees and by persons under contract with it and their employees whenever and wherever necessary for the purposes above set forth.

This grant is made and accepted upon the following terms and conditions:

1. District shall be responsible for and bear the entire cost of the design and construction of the improvements necessary to utilize the above easements for their stated purposes. Subject to the necessity for District to utilize said easements to meet the flood control purposes of the District, District shall cooperate with the State Department of Parks and Recreation, the County of Los Angeles, and The City of Los Angeles in the design of the retention basin, storm drains, and appurtenant structures so that District's use of said easements shall be consistent with the use of the area for park purposes.
2. District shall be responsible for the operation and maintenance of all structures it constructs within said easements and shall bear all costs of said activities; however, District shall not be responsible for the work of replacing, nor for the cost thereof, of any park landscaping, equipment, or other park improvements which may be damaged by reason of inundation within said easements pursuant to the rights of District under said easements.
3. District shall have the right from time to time to modify, construct, or reconstruct such structures as are necessary or desirable within said easements in order to assume the safe operation of the facility. The cost of such work shall be borne by District. District shall restore all park improvements affected by such work and shall bear the cost of

doing so. Said work shall be subject to prior review by the State Department of Parks and Recreation and the County of Los Angeles.

4. Whenever the District's easements are inundated or inundation is imminent, District's Chief Engineer shall have paramount authority over the land included within said easements and may promulgate and enforce such rules and procedures and may order and direct such activities as may be reasonably necessary for the public safety and to enable the District to carry out its functions in controlling flood, storm, and other waste waters.

5. District is further given the right of reasonable ingress and egress to and from the easements hereby granted. Such right of ingress and egress shall at all times be exercised in a manner which will cause the least damage to the property of the State.

Dated January 9, 1981

STATE OF CALIFORNIA, Department of General Services

By /s/ Edward R. Miller

APPROVED
DEPARTMENT OF PARKS AND RECREATION
By /s/ Jack Harrison
Deputy Director

STATE OF CALIFORNIA)
) ss.
COUNTY OF SACRAMENTO)

On this 9th day of January, 1981, before me, Constance K. Okino, a Notary Public in and for said County and State, personally appeared Edward R. Miller known to me to be the Chief Land Agent of the Department of General Services of the State of California that executed the within instrument, and also known to me to be the person who executed the within instrument on behalf of the State of California therein named and acknowledged to me that the State of California executed the same.

IN WITNESS WHEREOF, I have hereunto set my hand and affixed my official seal at my office in the said County and State aforesaid, the day and year, in this certificate first above written.

/s/ Constance K. Okino
Notary Public in and for said County and State
(SEAL)

My Commission expires February 29, 1984

AGREEMENT REGARDING FLOOD CONTROL
FACILITIES OVER–BUILD: HOLOCAUST MUSEUM

This Agreement Regarding Flood Control Facilities Over-Build: Holocaust Museum ("**Agreement**") is entered into as of DECEMBER 1, 2021 by and between Holocaust Museum LA, a California public benefit 501(c)(3) non-profit corporation ("**Museum**") with a principal mailing address at 100 S. The Grove Drive, Los Angeles, CA 90036, and The Los Angeles County Flood Control District ("**LACFCD**") with respect to the following:

A. Museum is the lessee of a parcel of land under a lease with the City of Los Angeles ("**City**") dated October 31, 2007, as amended, (the "**Existing Lease**") under which Museum has constructed, owns and operates the Holocaust Museum described therein.

B. City will own and control the parcel of land described on Exhibit A hereto (the "**Annex Parcel**") adjacent to the parcel leased to Museum under the Existing Lease, as soon as title to the Annex Parcel is transferred to City from the State of California. Thereafter, City and Museum will enter into an amendment to the Existing Lease pursuant to which Museum shall lease the Annex Parcel from City for the purpose of constructing, owning and operating an annex to the existing Holocaust Museum (the "**Annex**"). The Existing Lease as so amended is referred to herein as the "**Lease**."

C. LACFCD holds easements for covered storm drain and flood control purposes (the "**Easements**") over a portion of the Annex Parcel, pursuant to an Easement Deed recorded with the Office of the County Registrar-Recorder on February 1, 1980 as Document No. 80-121843 (the "**Easement Deed**"), and has constructed, operates, and maintains flood control facilities within the Easements (the "**FCD Facilities**").

In connection with LACFCD's issuance of a permit for the construction of the Annex over a portion of the FCD Facilities, LACFCD and Museum agree as set forth below:

1. **Consent and Museum Agreement**

1.1 LACFCD consents to the construction and operation of the Annex by Museum pursuant to the terms of the Lease subject to the terms hereof, and provided that this Agreement shall be subject to the terms of the Easement Deed. Museum shall construct and maintain the Annex so as not to interfere with LACFCD's use of the Easements, at any time, or cause any damage to the FCD Facilities.

1.2 Museum's architect and engineers shall coordinate with LACFCD's engineers and/or its designated consultants to make the plans for the Annex consistent with the FCD Facilities. LACFCD and LACFCD's engineers shall have the right to review each phase of the design development and the plans for the Annex to assure their compatibility and coordination with the FCD Facilities. Museum shall submit to LACFCD for LACFCD's review and approval, fully completed and engineered working drawings and specifications (the "**Annex Plans**") suitable for plancheck review for the construction of the Annex. Museum shall not commence

any construction activities within the Easements until the LACFCD has approved the Annex plans and issued a permit for the construction of the Annex. LACFCD shall not unreasonably withhold, condition or delay its approval of the Annex Plans.

1.3 LACFCD's review and approval of the Annex Plans shall be solely to protect the interests of LACFCD in the FCD Facilities and to confirm the compatibility and coordination of the Annex Plans with the FCD Facilities, and shall not obligate LACFCD to ascertain the existence of, or notify Museum of any violations of applicable codes, rules, laws or regulations. Accordingly, notwithstanding that any portion of the Annex Plans is reviewed by LACFCD or its engineers and consultants, and notwithstanding any advice or assistance which may be rendered to Museum by LACFCD or LACFCD's engineers and consultants, LACFCD shall have no liability whatsoever in connection therewith and shall not be responsible for any omissions or errors contained in the Annex Plans.

1.4 To the extent that the construction, operation, alteration, maintenance or repair of the Annex or the failure to maintain or repair the Annex causes damage to the FCD Facilities, Museum shall reimburse LACFCD for the reasonable, costs of repair of such damage. Such costs shall be identified in an invoice, accompanied by reasonably adequate substantiation of such costs, provided by LACFCD to Museum, and Museum shall pay said invoice within thirty (30) days of the date such invoice and substantiation is received or such other date as may be agreed to, in writing, by LACFCD.

1.5 Museum shall make reasonable efforts to cooperate with LACFCD in LACFCD's operation, maintenance, repair, alteration and or replacement activities related to the FCD Facilities including providing reasonable access to the Easements area on the Annex Parcel for LACFCD personnel.

1.6 Prior to commencing any alteration or modification of the Annex or Annex accessory structure that has the potential to overstress the FCD Facilities, Museum shall notify and consult with LACFCD.

1.7 This Agreement shall be binding upon and shall inure to the benefit of the parties hereto and their respective successors and assigns.

2. **Release and Indemnification**

2.1 Museum shall indemnify, defend, and hold LACFCD and the County of Los Angeles, and their officers, employees, and agents, harmless from and against any claims, demands, liability, damages, or costs to the extent arising from or caused by the breach of any of the Museum's obligations under this Agreement, by the construction , operation, alteration, maintenance or repair of the Annex, or by the failure to maintain or repair the Annex, provided, however, that Museum's obligation to indemnify shall not apply to any claim, demand, liability, damage, or cost to the extent that such claim, demand, liability, damage, or cost is caused by the active negligence or intentional misconduct of LACFCD, the County of Los Angeles or any of its officers, employees, or agents.

2.2 Museum shall fully release and discharge LACFCD and the County of Los Angeles, and their officers, employees and agents, from any claims and/or actions involving any

damage to the Annex arising from or in connection with the operation, maintenance, repair, alteration and or replacement of the FCD Facilities located within or adjacent to the Annex Parcel.

IN WITNESS WHEREOF, the parties hereto have caused this Agreement to be executed by their duly authorized representatives.

HOLOCAUST MUSEUM LA,
a California public benefit 501(c)(3) non-profit corporation

By: Guy Lipa
Its: Board Chair

By:
Its: CEO

Dated: 11/15/21

LOS ANGELES COUNTY FLOOD CONTROL DISTRICT

By:
Its: PW

Dated: 12/1/2021

EXHIBIT A

LEGAL DESCRIPTION

Being a portion of the Rancho La Brea, in the City of Los Angeles, County of Los Angeles, State of California, as shown on map recorded in Book 1, pages 289 and 290, of Patents in the office of the County Recorder of said County, the horizontal limits being described as follows.

Commencing at the intersection of the southerly line of Beverly Boulevard, 100 feet wide, as shown on Tract No. 45628, in said City, as per map filed in Book 1265, pages 33 through 39, inclusive, of Maps with the easterly line of The Grove Drive, 60 feet wide; thence southerly along said easterly line, South 00°00'37" East, 520.00 feet to the southerly line of the land described in Quitclaim Deed recorded January 2, 2008 as Instrument No. 20080000476 of Official Record of said County and the Point of Beginning; thence continuing along said easterly line, South 00°00'37" East 426.75 feet; thence leaving said easterly line, North 89°59'23" East 75.00 feet to a line parallel with and lying 75.00 feet easterly of the easterly line of said The Grove Drive; thence northerly along said parallel line; North 00°00'37" West 418.98 feet to the beginning of a non-tangent curve, concave southeasterly, having a radius of 71.67 feet and to which beginning a radial line bears North 35°33'48" West; thence northeasterly along said curve, through a central angle of 13°20'30", an arc distance of 16.69 feet to the southerly line of the land per said Quitclaim Deed; thence westerly along said southerly line, South 89°48'30" West 89.58 feet to the Point of Beginning.

Except therefrom that portion lying within the land described in Quitclaim Deed recorded October 21, 2011 as Instrument No. 20111431667 of Official Records of said County.

This legal description is delineated on the accompanying "Exhibit B" and is made a part hereof for reference purposes and is not to be used in conveyance of land in violation of the Subdivision Map Act of the State of California.

Prepared under the direction of

Douglas R. Howard, PLS 6169 — Date 10/21/2021

PSOMAS

PROFESSIONAL LAND SURVEYOR
DOUGLAS R. HOWARD
No. 6169
STATE OF CALIFORNIA

W:\1HOL010100\SURVEY\LEGALS\LEGAL_MUSEUM_2021-1021.doc
10/21/2021
DRH:tmcd

EXHIBIT B

SHEET 1 OF 1

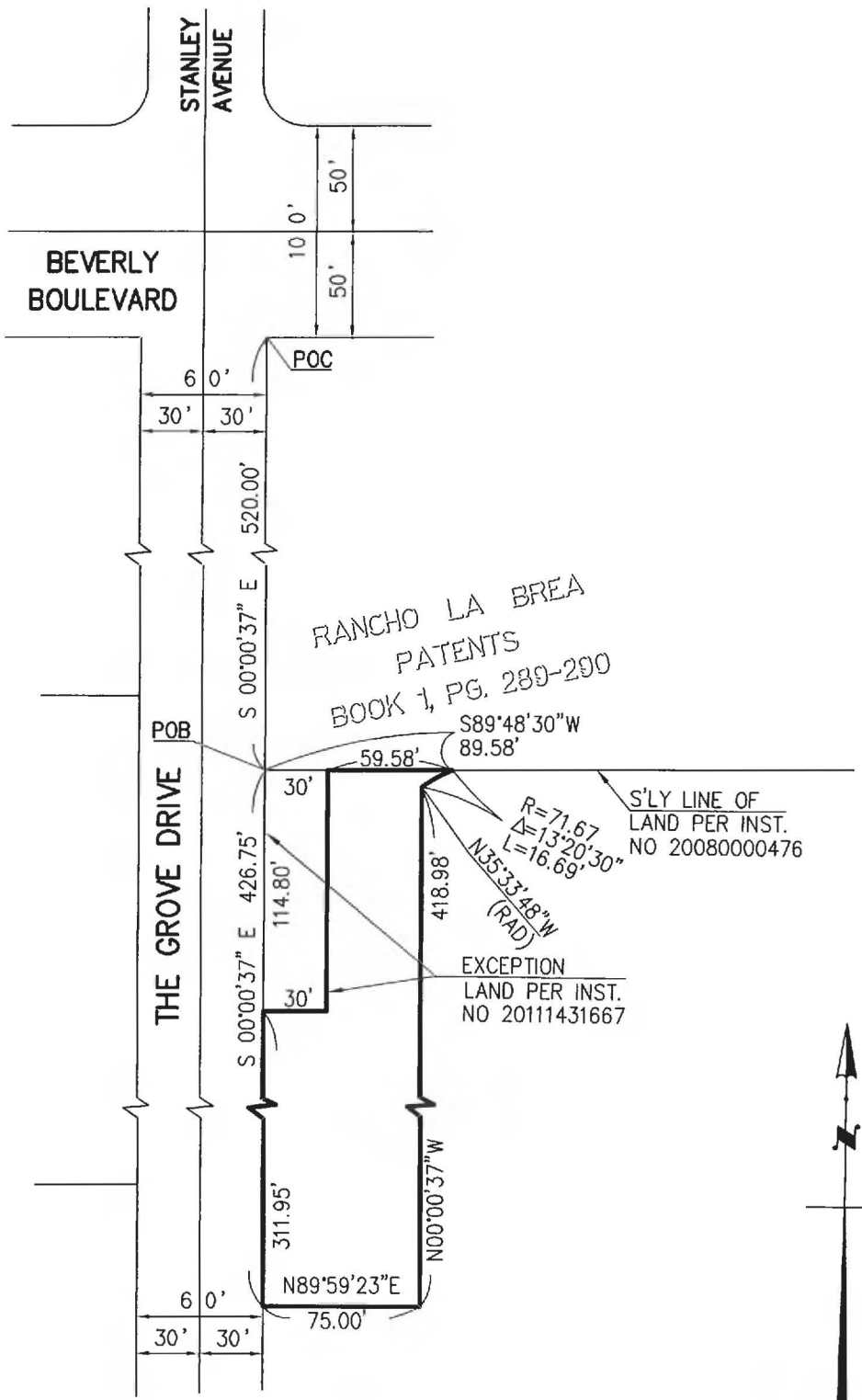

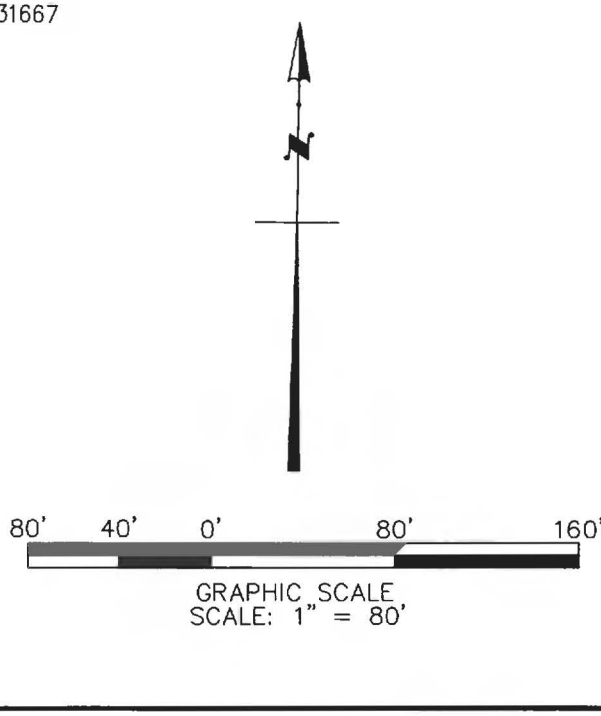

PSOMAS
555 South Flower Street, Suite 4300
Los Angeles, CA 90071
(213) 223-1400 (213) 223-1444 (FAX)
www.psomas.com

1HOL010100 10/21/2021

Oct. 21, 2021 - 09:47:04 DWG Name: W:\1HOL010100\SURVEY\LEGALS\PL\PL-EXHIBIT_ESMT_2021-0726.dwg Updated By: dhoward

MARK PESTRELLA, Director

COUNTY OF LOS ANGELES
DEPARTMENT OF PUBLIC WORKS
"To Enrich Lives Through Effective and Caring Service"

900 SOUTH FREMONT AVENUE
ALHAMBRA, CALIFORNIA 91803-1331
Telephone (626) 458-5100
http://dpw.lacounty.gov

ADDRESS ALL CORRESPONDENCE TO:
P.O. BOX 1460
ALHAMBRA, CALIFORNIA 91802-1460

IN REPLY PLEASE
REFER TO FILE

ADOPTED
BOARD OF SUPERVISORS
COUNTY OF LOS ANGELES
56 July 13, 2021
CELIA ZAVALA
EXECUTIVE OFFICER

July 13, 2021

The Honorable Board of Supervisors
County of Los Angeles
383 Kenneth Hahn Hall of Administration
500 West Temple Street
Los Angeles, California 90012

Dear Supervisors:

CONSTRUCTION CONTRACT
WATER RESOURCES CORE SERVICE AREA
DELEGATED AUTHORITY TO ADOPT, ADVERTISE, AND AWARD
PROJECT NO. 9408 WEST HOLLYWOOD PAN PACIFIC RETENTION BASIN DIVERSION GATE AND CONTROL HOUSE UPGRADE
PROJECT ID NO. FCC0001359
IN THE CITY OF LOS ANGELES
(SUPERVISORIAL DISTRICT 3)
(3 VOTES)

SUBJECT

Public Works is seeking Board approval to carry out accelerated delivery of the Project No. 9408 West Hollywood Pan Pacific Retention Basin Diversion Gate and Control House Upgrade Project in the City of Los Angeles.

IT IS RECOMMENDED THAT THE BOARD:

1. Find that this project is categorically exempt from the California Environmental Quality Act for the reasons stated in this Board letter and in the record of the project.

2. Approve the project and delegate to the Chief Engineer of the Los Angeles County Flood Control

District or his designee the authority to adopt the plans and specifications and advertise for bids at an estimated construction contract cost between $2,700,000 and $4,000,000 for Project No. 9408 West Hollywood Pan Pacific Retention Basin Diversion Gate and Control House Upgrade Project.

3. Find pursuant to State Public Contract Code, Section 3400(c)(2) that it is necessary to specify the designated items, identified in this Board letter, by specific brand name in order to match other products in use on a particular public improvement either completed or in the course of completion.

4. Delegate authority to the Chief Engineer of the Los Angeles County Flood Control District or his designee to determine whether the bid of the apparent responsible contractor with the lowest apparent responsive bid is, in fact, responsive and, if not responsive, to determine which apparent responsible contractor submitted the lowest responsive bid.

5. Delegate authority to the Chief Engineer of the Los Angeles County Flood Control District or his designee to award and execute a construction contract with the responsible contractor with the lowest responsive bid less than, within, or exceeding the estimated cost range by no more than 15 percent if additional and appropriate funds have been identified.

6. Delegate to the Chief Engineer of the Los Angeles County Flood Control District or his designee the following authority in connection with these contracts: (1) extend the date and time for the receipt of bids consistent with the requirements of State Public Contract Code, Section 4104.5; (2) allow substitution of subcontractors and relief of bidders upon demonstration of the grounds set forth in State Public Contract Code, Sections 4100 et seq. and 5100 et seq., respectively; (3) approve and execute change orders within the same monetary limits delegated to the Director of Public Works or his designee under Section 2.18.050 of the Los Angeles County Code relative to the construction of County buildings; (4) accept the project upon its final completion; and (5) release retention money withheld consistent with the requirements of State Public Contract Code, Sections 7107 and 9203.

PURPOSE/JUSTIFICATION OF RECOMMENDED ACTION

Approval of the recommended actions will find that the proposed project is exempt from the California Environmental Quality Act (CEQA) and allow Public Works to implement the Project No. 9408 West Hollywood Pan Pacific Retention Basin Diversion Gate and Control House Upgrade Project to replace the existing slide gate; upgrade mechanical, electrical, and controls systems; and construct a new control house within the Pan Pacific Retention Basin in the City of Los Angeles (see Enclosure 1 for location). The project will improve operational reliability of the project and the Pan Pacific Retention Basin, which provide regional flood protection for the area.

It is anticipated that work will start in February 2022 and be completed by October 2022.

Implementation of Strategic Plan Goals

These recommendations support the County Strategic Plan: Strategy III.3, Pursue Operational Effectiveness, Fiscal Responsibility, and Accountability, Objective III.3.2, Manage and Maximize County Assets, by supporting ongoing efforts to manage and improve public infrastructure assets.

FISCAL IMPACT/FINANCING

There will be no impact to the County General Fund.

The estimated construction contract cost to complete the project is in the range of $2,700,000 to $4,000,000. In addition to construction contract costs, the total project costs include the preparation of plans and specifications, construction engineering, inspection, contract administration, a change order contingency, environmental compliance, and other County services. The total project cost is estimated to be $4,500,000.

Funding for this project is included in the Flood Control District Fund Fiscal Year 2021-22 Budget. Funding for future years will be requested through the annual budget process.

FACTS AND PROVISIONS/LEGAL REQUIREMENTS

The Holocaust Museum of Los Angeles is planning to implement an expansion project that will be located above the existing spillway and portions of the storm drain structures. Public Works will work with the Museum to ensure that the construction activities of both projects are coordinated and phased to avoid or minimize any construction impacts.

The project will be advertised in accordance with Section 20991 of the State Public Contract Code.

State Public Contract Code Section 3400 allows a product to be designated by specific brand name for several purposes, such as to match other products in use on a particular public improvement either completed or in the course of completion, if the awarding authority makes a finding and language is included in the Notice Inviting Bids. The Notice Inviting Bids for the project includes language describing this finding.

A list of specific brand names and qualified purposes in accordance with the State Public Contract Code is provided in Enclosure 2.

The contract award will comply with applicable Federal and State requirements and Board policies and mandates. The contract documents will require the contractor to comply with these same requirements, policies, and mandates. The construction contract will be in the form previously reviewed and approved as to form by County Counsel.

As required by Board Policy No. 5.140, information such as defaulted contracts with the County, complaints filed with the Contractors State License Board, labor violations, and debarment actions will be considered before a contract is awarded. Documents related to award of this contract will be available at Los Angeles County Public Works, Project Management Division III, 900 South Fremont Avenue, 8th Floor, Alhambra, CA 91803.

ENVIRONMENTAL DOCUMENTATION

The proposed project is exempt from CEQA.

The Project No. 9408 West Hollywood Pan Pacific Retention Basin Diversion Gate and Control

House Upgrade Project to replace the existing slide gate, upgrade mechanical and electrical components of the diversion gate, and construct a new control house within the retention basin right of way is within a class of projects that has been determined not to have a significant effect on the environment and that meets the criteria set forth in Sections 15282 (k), 15301 (b), 15302 (c), 15303 (d), and 15304 (f) of the State CEQA Guidelines and Class 1, Subsections (e) and (l); Class 2, Subsections (b) and (e); Class 3, Subsection (q); and Class 4, Subsection (k) of the County's Environmental Document Reporting Procedures and Guidelines, Appendix G.

In addition, based on the proposed project records, the project will comply with all applicable regulations, and there are no cumulative impacts, unusual circumstances, damage to scenic highways, listing on hazardous waste site lists compiled pursuant to Government Code, Section 65962.5, or indications that it may cause a substantial adverse change in the significance of a historical resource that would make the exemption inapplicable.

CONTRACTING PROCESS

In accordance with the Board's consolidated Local and Targeted Worker Hire Policy, the contract documents will require that at least 30 percent of the total California craft worker hours for construction of the project be performed by Local Residents and at least 10 percent be performed by Targeted Workers facing employment barriers.

To increase contractor awareness of Public Works' program to contract work out to the private sector, this project will be listed on both the County's "Doing Business with the County" and "Do Business with Public Works" websites for open bids:

http://www.lacounty.gov/business/doing-business-with-the-county

http://pw.lacounty.gov/general/contracts/opportunities

Also, the contract solicitation will be advertised through web-based and social media platforms, including Twitter.

In addition, in order to increase opportunities for small businesses, Public Works will be coordinating with the Office of Small Business at the Department of Consumer and Business Affairs to maximize outreach, as well as offering preferences to Local Small Business Enterprises, Social Enterprises, and Disabled Veteran Business Enterprises in compliance with Los Angeles County Code, Chapters 2.204, 2.205, and 2.211.

IMPACT ON CURRENT SERVICES (OR PROJECTS)

When the project is completed, it will have a positive impact by improving flood management at a critical flood control facility. Approval of these actions will benefit the County by allowing the Los Angeles County Flood Control District to continue ensuring the safety of communities downstream of the retention basin.

CONCLUSION

Please return an adopted copy of this letter to Public Works, Project Management Division III.

Respectfully submitted,

MARK PESTRELLA, PE

Director

MP:SRB:ml

Enclosures

c: Chief Executive Office (Chia-Ann Yen)
County Counsel
Executive Office
Internal Services Department (Countywide Contract Compliance)

ENCLOSURE 1
July 13, 2021

Project No. 9408 West Hollywood Pan Pacific Retention Basin

PAN PACIFIC PARK CONTROL HOUSE LOCATION MAP	LOS ANGELES COUNTY PUBLIC WORKS		
	DATE 7/16/19	PREPARED BY BL	Sheet: 1 of 1

ENCLOSURE 2
July 13, 2021

PROJECT NO. 9408 WEST HOLLYWOOD PAN PACIFIC RETENTION BASIN DIVERSION GATE AND CONTROL HOUSE UPGRADE PROJECT PROJECT ID NO. FCC0001359

List of Specific Brand Names in accordance with State Public Contract Code, Section 3400

	Item/Category	Manufacturer	Model	Detailed Justification PCC 3400(C)(2)
1	Programmable Logic Controller (PLC) Center Processing Unit	Automation Direct	H2-DM1E	To match other products in use on County facilities either completed or during completion.
2	PLC Base	Automation Direct	D2-06BDC1-1	To match other products in use on County facilities either completed or during completion.
3	PLC Discrete Input Module	Automation Direct	D2-16ND3-2 Discrete Input Module	To match other products in use on County facilities either completed or during completion.
4	PLC Relay Output Module	Automation Direct	F2-08TR Relay Output Module	To match other products in use on County facilities either completed or during completion.
5	PLC Analog Input Module	Automation Direct	F2-08AD4DA Analog Input/Output Module	To match other products in use on County facilities either completed or during completion.
6	PLC Alternating Current Input Module	Automation Direct	D2-16NA Alternating Current Input Module	To match other products in use on County facilities either completed or during completion.
7	PLC Ethernet Module	Automation Direct	D2-DCM Data Communication Module	To match other products in use on County facilities either completed or during completion.
8	PLC Filler Module	Automation Direct	F2-Fill Filler Module	To match other products in use on County facilities either completed or during completion.
9	PLC Programming Software	Automation Direct	Do-more PLC Programming Software and C-more Programming Software	To match other products in use on County facilities either completed or during completion.
10	Touch Panel	Automation Direct	EA9-T8CL Touch Screen	To match other products in use on County facilities either completed or during completion.
11	Pre-Wired Connector Module With Cables	Automation Direct	ZL-RTB20 Connector and ZL-D2-CBL-19 Cables	To match other products in use on County facilities either completed or during completion.

OCTOBER 25, 2021

HMLA

EXISTING TREE INVENTORY

Note: This document is intended to be used as a reference tool, not for construction. Final determination of tree mitigation to be coordinated/ confirmed by the City of Los Angeles Recreation and Parks department.

EXISTING TREE INVENTORY

FRAMEWORK OF THIS DOCUMENT:
The table below identifies existing trees by their Tree tag #, Scientific name, Caliper (diameter at breast height- DBH), Height, Health rating and Tree Protection Zone (TPZ) per City of Los Angeles Recreation and Parks replacement and tree protection specifications. Information within the table was compiled and provided by per the Tree Inventory report, dated 10/29/2020, by Psomas.

Trees to be removed are determined when the Tree Protection Zone (TPZ) encroaches into the proposed building footprint. The criteria which defines the TPZ and determination for replacement trees is included at the end of this document as provided per the City of LA Recreation and Parks department.

TREE INVENTORY TABLE:

Tree Tag #	Scientific Name	DBH (in) - 1st Trunk	DBH (in) - 2nd Trunk	Height (ft)	TPZ	Health Rating	Notes
1	*Olea europaea*	8	4.7	18	19.05	3	Intent is to replace consolate Olives. Mitigation required per RAC.
2	*Olea europaea*	6.9		15	10.35	3	Intent is to replace consolate Olives. Mitigation required per RAC.
3	*Olea europaea*	8.3		15	12.45	3	Intent is to replace consolate Olives. Mitigation required per RAC.
4	*Olea europaea*	8.5		18	12.75	3	Intent is to replace consolate Olives. Mitigation required per RAC.
5	*Olea europaea*	5	4.8	15	14.7	3	Intent is to replace consolate Olives. Mitigation required per RAC.
6	*Olea europaea*	6.8	3.7	18	15.75	3	Intent is to replace consolate Olives. Mitigation required per RAC.
7	*Olea europaea*	8.6		18	12.9	3	Intent is to replace consolate Olives. Mitigation required per RAC.
8	*Platanus racemosa*	20.7		30	31.05	4	Existing tree is located near proposed stair. Tree Protection Zone (TPZ) extends into plaz and existing bldg. Further coordination wtih RAC is needed.
9	*Platanus racemosa*	13.5		25	20.25	4	
10	*Platanus racemosa*	12.2		25	18.3	4	
11	*Platanus racemosa*	16.5		25	24.75	4	
12	*Pinus eldarica*	41		40	61.5	4	
13	*Pittosporum undulatum*	7.5	3.5	10	16.5	3	
14	*Washingtonia filifera*	12		10	5	3	Future location to be determined.
15	*Washingtonia filifera*	12		20	5	3	Future location to be determined.
16	*Washingtonia filifera*	17		25	5	3	Future location to be determined.
17	*Washingtonia filifera*	16		20	5	3	Future location to be determined.
18	*Washingtonia filifera*	10		8	5	3	Future location to be determined.
19	*Washingtonia filifera*	18		25	5	3	Psomas recommends removing. Leaning on Oak
20	*Quercus agrifolia*	13.1		25	19.65	2	
21	*Pinus eldarica*	28.4		35	42.6	4	Currently being reviewed for transplanting
22	*Pinus eldarica*	22.6		35	33.9	4	Currently being reviewed for transplanting
23	*Pinus eldarica*	26.5	13.3	35	59.7	4	Currently being reviewed for transplanting
24	*Pinus eldarica*	23.1		30	34.65	4	Currently being reviewed for transplanting
25	*Pinus eldarica*	28.2		35	42.3	4	Currently being reviewed for transplanting
26	*Pinus eldarica*	21.6		25	32.4	3	Currently being reviewed for transplanting
27	*Washingtonia filifera*	16		35	5	3	
28	*Quercus agrifolia*	2.2	2.1	8	6.45	3	Per Leon Boroditsky direction, this tree does not fall under the City of LA Protected Tree Ordinance and shall be mitigated with a 36" box Oak.
29	*Pinus eldarica*	19.6		30	29.4	4	
30	*Pinus eldarica*	21.1		30	31.65	4	
31	*Pinus eldarica*	31.5		30	47.25	4	
32	*Pinus eldarica*	32.3		30	48.45	4	TPZ encroaches into building footprint. Further coordination with RAC is needed.
33	*Pinus eldarica*	36.2		45	54.3	4	
34	*Pinus eldarica*	42.5		30	63.75	3	
35	*Pinus eldarica*	28.5		40	42.75	4	
36	*Pinus eldarica*	31		35	46.5	4	
37	*Ceiba speciosa*	9.8		18	14.7	4	
38	*Ceiba speciosa*	12.5		20	18.75	4	
39	*Ceiba speciosa*	10.7		18	16.05	4	
40	*Ceiba speciosa*	11		20	16.5	4	
67	*Tipuana tipu*	14.3		25	21.45	4	
68	*Platanus racemosa*	8.7		25	13.05	4	
69	*Platanus racemosa*	5.5		15	8.25	4	
70	*Quercus suber*	14.7		25	22.05	4	
71	*Quercus suber*	17.3		25	25.95	4	
78	*Platanus racemosa*	13.3		25	19.95	3	
79	*Platanus racemosa*	14.5		25	21.75	3	
80	*Platanus racemosa*	19.1		25	28.65	3	
81	*Platanus racemosa*	9.8		25	14.7	3	
82	*Olea europaea*	9.1	7.9	25	25.5	2	Tree associated with donor plaque. Tree does not appear to be in good health. Pending further review
83	*Olea europaea*	8.7	4.1	20	19.2	2	Tree associated with donor plaque. Tree does not appear to be in good health. Pending further review
84	*Olea europaea*	13.1		25	19.65	2	Tree associated with donor plaque. Tree does not appear to be in good health. Pending further review
85	*Olea europaea*	11.2	7.1	20	27.45	2	Tree associated with donor plaque. Tree does not appear to be in good health. Pending further review
86	*Olea europaea*	7.3	6.1	18	20.1	2	Tree associated with donor plaque. Tree does not appear to be in good health. Pending further review
87	*Olea europaea*	8.5		20	12.75	2	Tree associated with donor plaque. Tree does not appear to be in good health. Pending further review
88	*Platanus racemosa*	13.7		20	20.55	4	
89	*Platanus X hispanica*	28.6		35	42.9	4	
90	*Olea europaea*	8.8		20	13.2	3	Tree associated with donor plaque. Tree does not appear to be in good health. Pending further review
91	*Olea europaea*	9.5	7.1	20	24.9	3	Tree associated with donor plaque. Tree does not appear to be in good health. Pending further review
92	*Olea europaea*	8.2		20	12.3	3	Tree associated with donor plaque. Tree does not appear to be in good health. Pending further review
93	*Olea europaea*	9.1		20	13.65	3	Tree associated with donor plaque. Tree does not appear to be in good health. Pending further review
94	*Pinus halapensis*	3		8	4.5	NA	Not part of Psomas original Tree Inventory. Size of tree is assumed and should be confrmed by a certified arborist for inclusion within the final report.
95	*Olea europaea*	2		7	3	NA	Not part of Psomas original Tree Inventory. Size of tree is assumed and should be confrmed by a certified arborist for inclusion within the final report.
96	*Fraxinus uhdei*	1		6	1.5	NA	Not part of Psomas original Tree Inventory. Upon review at latest site visit 9/30/2021, this tree has been damaged/dead.

Trees to be removed, mitigation required (22 TOTAL)

Trees identified as damaged/dead, mitigation not required (1 TOTAL)

Trees to be relocated. (5 TOTAL)
Transplanting may not be desired per Rec and Parks, pending review/approval

Trees to be remain (36 TOTAL)

Note: Colors used in the above chart are associated with the Existing/Proposed Tree Plan within this document.

EXISTING TREE INVENTORY

MITIGATION CALCULATION:
Mitigation requirements per City of LA Recreation and Parks require all removed trees to be replaced by a 1:1 ratio determined by the cumulative DBH all removed tree calipers.

Cumulative DBH all removed tree calipers:	362.2” total
Proposed trees - (19) Total, estimated 81” cumulative DBH total, see note below	- 81.0” total
Total DBH for all required new trees:	281.2” total

Note: Cumulative DBH for Proposed/Replacement trees are calculated as listed below:
- 24” box trees shall receive 2” of caliper mitigation each
- 36” box trees shall receive 3” of caliper mitigation each
- 48” box trees shall receive 4” of caliper mitigation each
- 60” box trees shall receive 5” of caliper mitigation each

QUANTITY OF NEW TREES FOR MITIGATION:
Total DBH for all required new trees (281.2”) can be implemented through the following distribution:
- (141) 24” box trees or
- (94) 36” box trees or
- (71) 48” box trees or
- (57) 60” box trees

These quantites are shown for reference only as individual totals for **EACH** tree box size and intended to be used in preparation for an initial costing exercise. These quantities shall not be interpreted as a combination to meet the requirement.

However, the final determination of quantities and sizes, if a combination is preferred, will require confirmation by the project team and City of LA Recreation and Parks to meet the 1:1 DBH ratio.

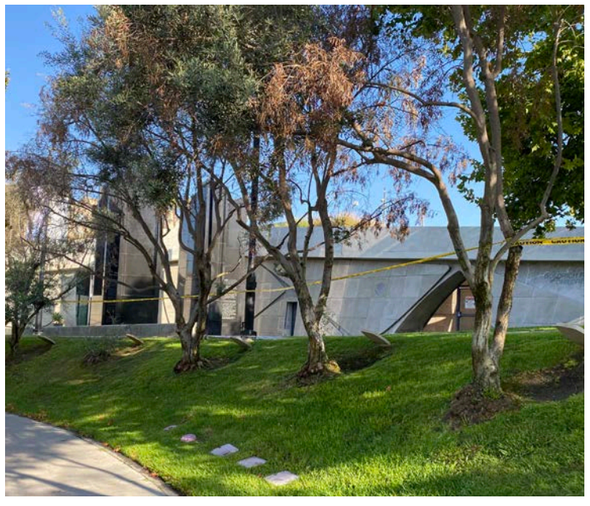
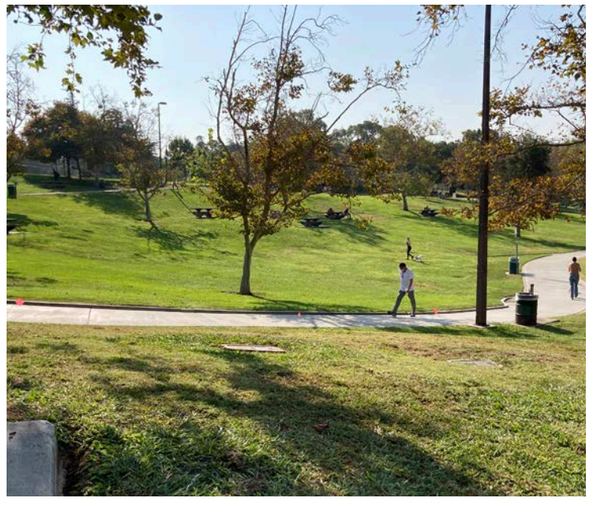

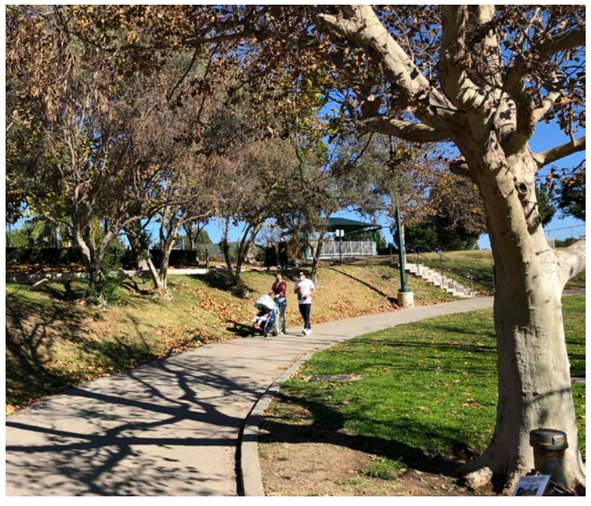

EXISTING/PROPOSED TREE PLAN

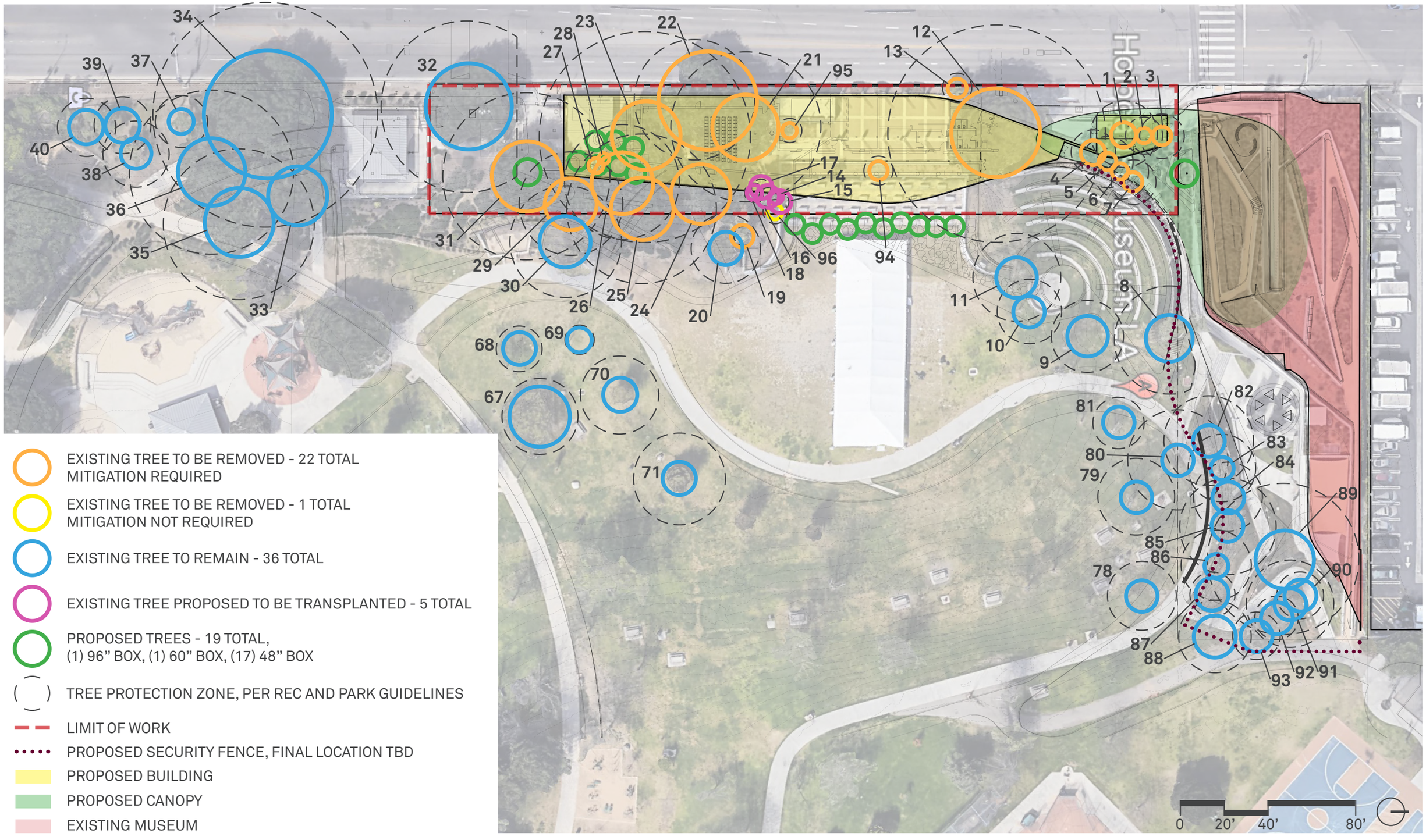

EXISTING TREE TO BE REMOVED - 22 TOTAL
MITIGATION REQUIRED

EXISTING TREE TO BE REMOVED - 1 TOTAL
MITIGATION NOT REQUIRED

EXISTING TREE TO REMAIN - 36 TOTAL

EXISTING TREE PROPOSED TO BE TRANSPLANTED - 5 TOTAL

PROPOSED TREES - 19 TOTAL,
(1) 96” BOX, (1) 60” BOX, (17) 48” BOX

TREE PROTECTION ZONE, PER REC AND PARK GUIDELINES

LIMIT OF WORK

PROPOSED SECURITY FENCE, FINAL LOCATION TBD

PROPOSED BUILDING

PROPOSED CANOPY

EXISTING MUSEUM

IMAGES - EXISTING TREES

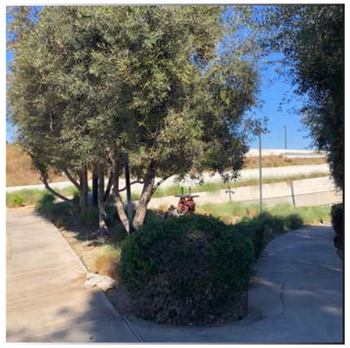
TREES #1-3

TREES #4-7

TREE #8

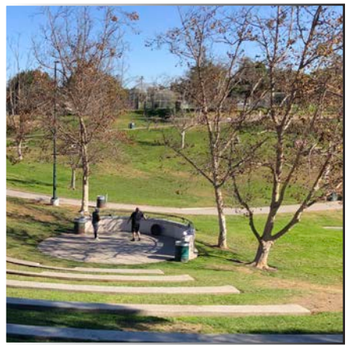
TREES #9-11

TREES #12

TREES #13

TREES #14-18

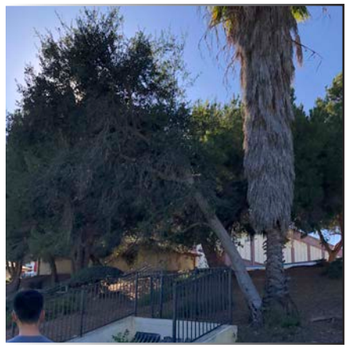
TREES #19 & 20

TREES #21, 22, & 23

TREE #22

TREES #23

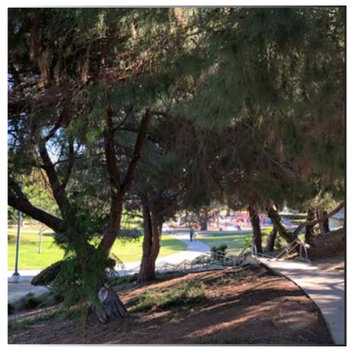
TREES #24-26

TREES #28

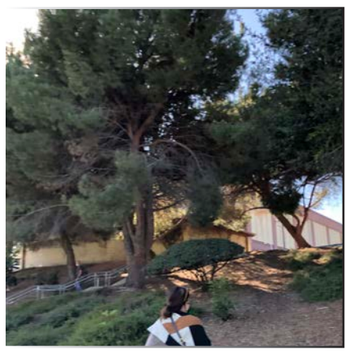
TREES #25,26,29, & 31

TREES #79 & 80

TREES #81

TREES #82-83

TREES #84-87

NOTE: IMAGES SHOWN HERE ARE FOR REFERENCE AND DO NOT INCLUDE ALL TREES IDENTIFIED IN THE TREE INVENTORY LIST/PLAN

CITY OF LA RECREATION AND PARKS - TREE PROTECTION SPECIFICATIONS

TREE PROTECTION SPECIFICATIONS

1.01 TREE PROTECTION

I. All trees that occur within the area of work, as shown on the plans, and not specifically designated for removal, shall be protected by the following means:

A. **Determining the Tree Protection Zone (TPZ)** - The **radius** (not the diameter) of the TPZ, measured from the outside of the tree trunk, shall be calculated by Recreation and Parks (RAP) Forestry according to the following:
   1. **Single trunk trees -** multiply the trunk diameter in inches, measured 4.5' above grade, by 1.5 feet.
   2. **Multi trunk trees -** multiply the sum of the diameters of all trunks in inches, measured 4.5' above grade, by 1.5 feet.
   3. **Palm trees -** 5' from the base of the trunk.

B. Once determined, the TPZ is to be clearly shown on all plans, including concept plans, for discussion purposes, including at the RAP Capital Improvements Meetings.

C. Beyond the TPZ, the contractor shall also be responsible for protecting all trees within the boundaries of the construction zone, including vehicular access areas leading to the construction zone, lay down areas, and any other areas impacted by construction activities. Any damage to trees in these areas shall also be subject to the same monetary or replacement requirements specified in Section II below. Any necessary root cutting in this area must be confirmed with either the RAP or other approved arborist. See also the General Conditions for any damage done by the contractor to landscaping or other park amenities that fall outside the boundaries of the construction zone.

D. Within the boundaries of the construction zone (including the TPZ), the contractor shall be responsible for mitigating construction-related dust accumulation on all trees by spraying the trunks, limbs, and foliage with water to a maximum height of 30 feet during the months of April through November, at monthly intervals.

E. Within the TPZ, the contractor shall adhere to the following requirements, including, but not limited to:
   1. No stockpiling or storage of any material, debris, or soil.
   2. No storage of any construction equipment.
   3. No vehicular access.
   4. No cutting of roots.
   5. No disturbance of soil or grade changes.
   6. No objects of any kind to be attached to tree trunks.

F. The contractor shall install a 5' high temporary chain link fence with one pedestrian access gate along the boundary of the TPZ. See *5' HIGH TREE PROTECTION FENCE* detail at the end of the document.

G. The contractor shall provide one sign per each 20 lineal ft. of fence bordering the TPZ indicating that fencing shall not be removed. See sign detail that is included as part of the temporary chain link detail.

H. No work is permitted within the TPZ without the approval of each of the following: 1) the project landscape architect, 2) the project manager, and 3) RAP Forestry staff. Any work authorized within the TPZ must be done in accordance with the recommendations of a RAP arborist and under the supervision of a Monitoring Arborist. A Monitoring Arborist must be: 1) an ISA Certified Arborist or a Registered Consulting Arborist, with verifiable experience in protecting trees during construction; 2) approved by RAP Forestry. The Monitoring Arborist shall be hired and paid by the contractor.

I. Irrigation to all trees not specifically designated for removal shall be kept in operation for the duration of the project. Contractor shall be responsible for hand watering all impacted trees if necessitated by temporary shutdowns to existing irrigation systems. Trees are to be irrigated deeply and infrequently so that soil moisture is detectable at a minimum depth of 18" using a soil probe.

J. Upon job completion, contractor shall remove all items installed to protect trees during the construction process.

K. Any of the following Southern California native tree species fall under Ordinance No. 177404 of the Los Angeles Municipal Code:
   1. Oaks, including Valley Oak (*Quercus lobata)*, California Live Oak (*Quercus agrifolia),* or any other tree of the oak genus indigenous to California but excluding Scrub Oak *(Quercus dumosa);*
   2. Southern California Black Walnut *(Juglans californica* var. c*alifornica);*
   3. Western Sycamore *(Platanus racemosa);*
   4. California Bay *(Umbellularia californica).*

   Contractor shall comply with the requirements of the ordinance found at: http://cityplanning.lacity.org/Code_Studies/Other/ProtectedTreeOrd.pdf.

II. Consequences of violating the Tree Protection Specifications:

A. ANY FAILURE BY THE CONTRACTOR TO ADHERE TO THE REQUIREMENTS SPECIFIED WITHIN THESE SPECIFICATIONS WILL RESULT IN THE SUSPENSION OF ALL CONSTRUCTION ACTIVITIES, TO BE DONE AT THE CONTRACTOR'S EXPENSE. THE CONTRACTOR SHALL BE RESPONSIBLE FOR PAYMENT FOR OR REPLACEMENT OF ANY TREES DAMAGED THROUGH NON-COMPLIANCE WITH THESE

SPECIFICATIONS. The choice of whether the damaged trees are replaced or paid for will be determined by RAP Forestry.

1. **Monetary valuations** for damaged trees will be determined by RAP Forestry.
2. **How RAP determines the quantity, species, and location of replacement trees:**
   a) Measuring the diameter of the tree(s) being replaced:
      1) For single trunk trees, the diameter (DBH) is measured 4.5' above the ground.
      2) For multi-trunk trees, the DBH of each of the multiple trunks is measured 4.5' above the ground, then all are summed to arrive at a single diameter value.
   b) The ratio of the sum of calipers (as defined by RAP Nursery Specifications) of new trees planted vs. the sum of the diameters of existing trees removed shall be at least 1:1. The specific number of replacement trees will be determined by RAP Forestry staff and the project landscape architect.
   c) If the replacement ratio cannot be achieved within the project boundaries, then one of the following shall apply:
      1) Deliver the trees to RAP Forestry.
      2) Deliver the trees to the nearest RAP service yard.
      3) Plant the trees beyond the project on an approved, area-wide basis.
   d) RAP Forestry staff and the project landscape architect shall determine the replacement tree species/planting location and shall also ensure the health/quality of the trees.